Fermilab

Particle Physics Division Mechanical Department Engineering Note

Number: MD-ENG-200 Date: October 12, 2009

Project: Lab 3 cleanroom inert gas system, ODH analysis

Project Internal Reference: PPD/TC/Lab 3

Title: **Description and ODH analysis for Lab 3 cleanroom inert gas system**

Author(s): Russ Rucinski

Reviewer(s):

Key Words: ODH, Safety, Lab 3, cleanroom

Abstract/Summary: This is a description of the inert gas system for the Lab 3 cleanrooms. The source gas are 180 liter liquid nitrogen or argon dewars. An ODH analysis showing that the cleanrooms are ODH class 0 is presented. An interlock is described that stops gas flow in the event of no ventilation. The interlock is not required for ODH, but is good engineering practice.

Applicable Codes: Fermilab Environment, Safety, and Health manual, chapter 5064 and 5064TA, rev. 5/09

Inert gas system for the clean rooms at lab 3

John Krider and Jean Wilson 12/4/07, major revision R. Rucinski 10/09

An inert gas distribution system that utilizes liquid cryogen boil-off has been installed for the two clean rooms at lab 3. The system was designed by Rich Schmitt and assembled by Todd Nebel, Jerry Taccki and Ron Miksa. A system diagram is shown in Figure 1. The source is a 160 liter or 180 liter liquid nitrogen or argon dewar, which is located outdoors, near the gas bottle storage area at the south end of the building. A 3/8 inch OD copper tube carries the gas along the inside of the east wall of the main building to a control box located midway along the exterior of the east wall of the clean rooms. The control box contains two independent channels with normally closed solenoid valves, which are actuated by flow sensors in the ducts of the two clean room air circulation systems. Inert gas flow is permitted to each room only when that room's air circulation system is operating, in order to reduce the ODH risk. The control box wiring is shown in Figure 2, and the parts list is shown in Figure 3.

Pressure safety issues have been addressed in the following ways. A 30 psig relief valve, which vents to the outdoors, protects the indoors components from over pressurization. Copper lines are used between the dewar and the clean rooms.

An ODH safety analysis has been completed and shows the cleanrooms to be ODH class 0 without the extra precaution of the interlock box described above. The maximum flow rate through 200 feet of 3/8" OD copper tubing is calculated to be 250 scfh for argon and 300 scfh for nitrogen. The inert gas serves both cleanrooms. The analysis is done for each cleanroom and each type of gas with normal ventilation, and without any ventilation. There are three events to consider that would lead to an inert gas release. The most likely is operator error. An operator error of forgetting to re-close a valve is 1 in 100 (.01) per demand. The gas supply is normally used as a steady state purge of about 1 scfh (negligible in terms of ODH). I assume an operator would have an occasion to operate a valve once per month. That leads to a probability of release 1.4E-5 per hour. Another case is the rupture or leakage of a valve or fitting. The last case is the breakage and leakage of the tubing line. The flow rate for all these events is taken at worst case, maximum supply possible through the supply line. Equations and the methodology is from FESHM 5064, revision May 2009. The data and formulas used in the ODH analysis are shown in tables 1 and 2. The highest summed ODH fatality rate per hour is 1.5E-9. This is well below the ODH class 1 threshold of 1E-7 per hour and therefore the cleanrooms are ODH class 0. No special precautions are needed with regard to ODH.

As a good engineering practice, the interlock box is part of the system. The cleanrooms are fairly tightly sealed volumes and even though the cleanrooms are shown to be class 0 without the interlock box, it makes good engineering sense to stop inert gas flow in the event that the ventilation is turned off.

Table 1. ODH analysis for Lab 3 cleanrooms

Source gas	Liquid Liters	Gas at STP (liters)	Gas at STP (ft^3)	Max Leak rate (scfh)	Time empty (hours)	Time empty (min)
Argon	180	154620	5462	250	21.8	1311
Nitrogen	180	123660	4368	300	14.6	874

Area & source gas	Room Volume (ft^3)	Ventilation rate * (cfm)	Fresh makeup (cfm)	Leak rate (scfh)	Max Leak rate (scfm)	with ventilation O2 when dewar empty	No ventilation O2 when dewar empty	No ventilation O2 Partial pressure (mmHg)	Fatality factor
Cleanroom A, gAr	13860	6200	620	250	4.2	0.209	0.142	104.8	1.05E-04
Cleanroom A, gN2	13860	6200	620	300	5.0	0.208	0.153	113.4	1.45E-05
Cleanroom B, gAr	22800	9400	940	250	4.2	0.209	0.165	122.3	1.86E-06
Cleanroom B, gN2	22800	9400	940	300	5.0	0.209	0.173	128.3	4.67E-07

"i" event to consider	Pi Rate (per hr)	C.R. A, GAr Fatality Factor Fi	C.R. A, GN2 Fatality Factor Fi	C.R. B, GAr Fatality Factor Fi	C.R. B, GN2 Fatality Factor Fi	C.R. A, GAr ODH fatality rate Øi=Pi*Fi	C.R. A, GN2 ODH fatality rate Øi=Pi*Fi	C.R. B, GAr ODH fatality rate Øi=Pi*Fi	C.R. B, GN2 ODH fatality rate Øi=Pi*Fi
Valve left open, op. error	1.40E-05	1.05E-04	1.45E-05	1.86E-06	4.67E-07	1.47E-09	2.03E-10	2.61E-11	6.54E-12
Valve rupture or leak	1.00E-07	1.05E-04	1.45E-05	1.86E-06	4.67E-07	1.05E-11	1.45E-12	1.86E-13	4.67E-14
Tube rupture/leak	1.00E-08	1.05E-04	1.45E-05	1.86E-06	4.67E-07	1.05E-12	1.45E-13	1.86E-14	4.67E-15
				Summation, Ø=ΣPi*Fi =		**1.48E-09**	**2.04E-10**	**2.63E-11**	**6.59E-12**
			Since Ø <10E-7 hr-1, ODH class is:			ODH class 0	ODH class 0	ODH class 0	ODH class 0

Table 2. Formulas in ODH analysis in table 1.

Source gas	Liquid Liters	Gas at STP (liters)	Gas at STP (ft^3)	Max Leak rate (scfh)	Time empty (hours)	Time empty (min)
Argon	180	=B15*859	=C15*0.1337/3.785	250	=D15/E15	=F15*60
Nitrogen	180	=B16*687	=C16*0.1337/3.785	300	=D16/E16	=F16*60

Area & source gas	Room Volume (ft^3)	Ventilation rate * (cfm)	Fresh makeup (cfm)	Leak rate (scfh)	Max Leak rate (scfm)	with ventilation O2 when dewar empty	No ventilation O2 when dewar empty	No ventilation O2 Partial pressure (mmHg)	Fatality factor
Cleanroom A, gAr	13860	6200	=0.1*C6	250	=E6/60	=0.21*(D6/(D6+F6))	=0.21*EXP(-F6*$G$15/B6)	=H6*740	=10^(6.5-I6/10)
Cleanroom A, gN2	13860	6200	=0.1*C7	300	=E7/60	=0.21*(D7/(D7+F7))	=0.21*EXP(-F7*$G$16/B7)	=H7*740	=10^(6.5-I7/10)
Cleanroom B, gAr	22800	9400	=0.1*C8	250	=E8/60	=0.21*(D8/(D8+F8))	=0.21*EXP(-F8*$G$15/B8)	=H8*740	=10^(6.5-I8/10)
Cleanroom B, gN2	22800	9400	=0.1*C9	300	=E9/60	=0.21*(D9/(D9+F9))	=0.21*EXP(-F9*$G$16/B9)	=H9*740	=10^(6.5-I9/10)

"i" event to consider	Pi Rate (per hr)	C.R. A, GAr Fatality Factor Fi	C.R. A, GN2 Fatality Factor Fi	C.R. B, GAr Fatality Factor Fi	C.R. B, GN2 Fatality Factor Fi	C.R. A, GAr ODH fatality rate Øi=Pi*Fi	C.R. A, GN2 ODH fatality rate Øi=Pi*Fi	C.R. B, GAr ODH fatality rate Øi=Pi*Fi	C.R. B, GN2 ODH fatality rate Øi=Pi*Fi
Valve left open, op. error	0.000014	0.000105007	0.0000144843	1.863382705	4.67087992	=$B22*C22	=$B22*D22	=$B22*E22	=$B22*F22
Valve rupture or leak	0.0000001	0.000105007	0.0000144843	1.863382705	4.67087992	=$B23*C23	=$B23*D23	=$B23*E23	=$B23*F23
Tube rupture/leak	0.00000001	0.000105007	0.0000144843	1.863382705	4.67087992	=$B24*C24	=$B24*D24	=$B24*E24	=$B24*F24
				Summation, Ø=ΣPi*Fi =		**=SUM(G22:G24)**	**=SUM(H22:H24)**	**=SUM(I22:I24)**	**=SUM(J22:J24)**
			Since Ø <10E-7 hr-1, ODH class is:			ODH class 0	ODH class 0	ODH class 0	ODH class 0

Figure 1: System Diagram

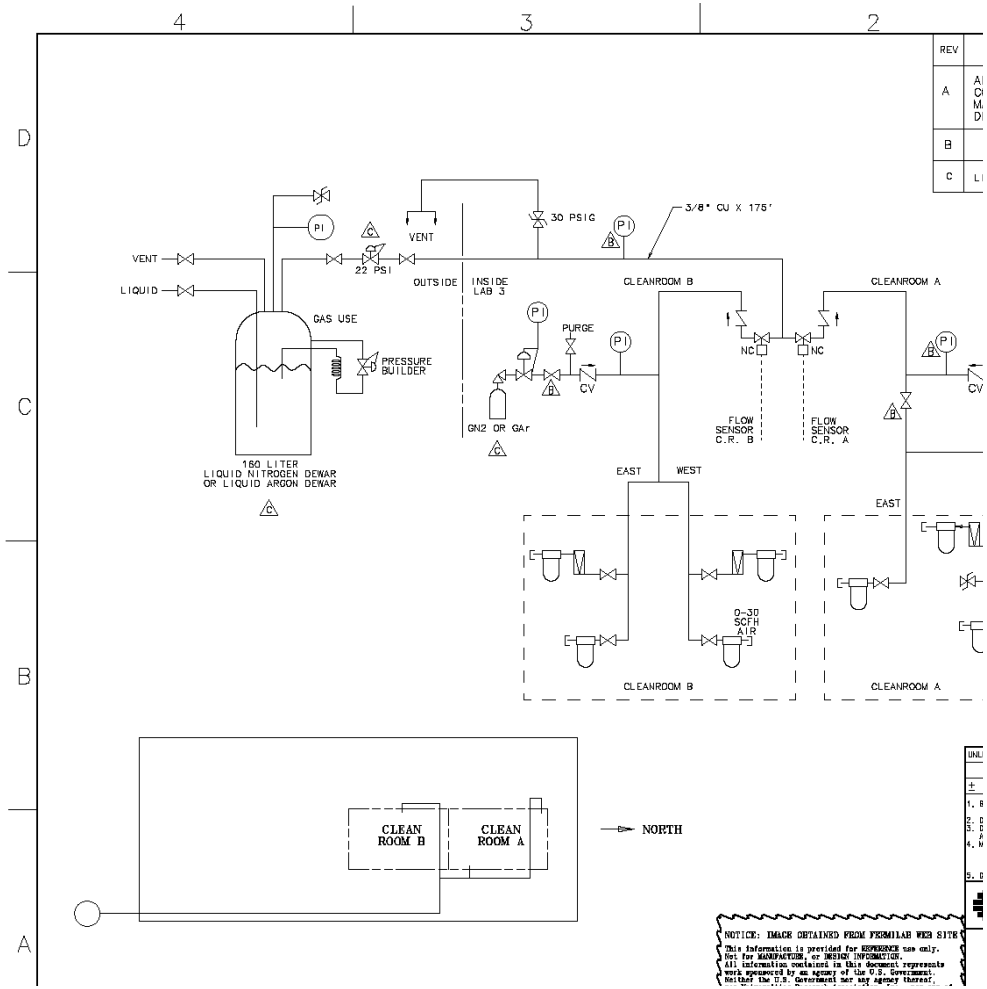

Figure 2: Control Box Wiring

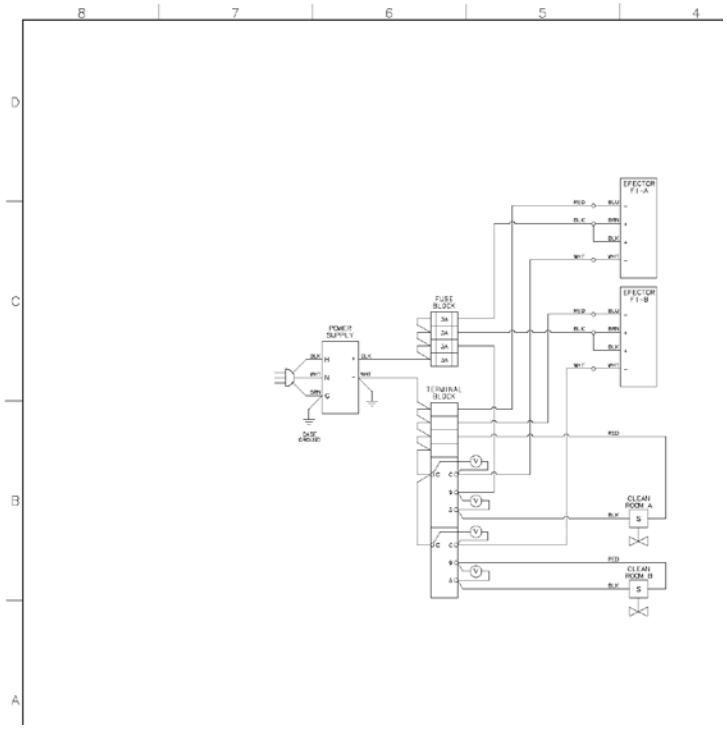

Figure 3: Control Box Parts List

Item	**source**	**model**	**quantity**
terminal blocks	exists		4
relay	exists		2
varistor	exists		4
efector	exists	model SL501	2
fuse holder	McMaster	part 7641K36	4
cabinet	McMaster	part 7561K44	1
DIN rail	McMaster	part 8961K15	1 meter long
strainer	McMaster	part 9802K5	2
pipe nipple	McMaster	part 4568K113	2
relay base	Newark	part 27E894	2
solenoid valve	Nueco	PK02F20C1106A1F	3
solenoid valve coil	Nueco	1F4C80	3
power cord	stockroom	1175-062000	1
strain relief bushing	stockroom	1150-050000	as needed
18 gauge wires	stockroom	at lab 3	as needed
fuse, 3A	stockroom	1120-048000	6
22 gauge wire	stockroom	1170-005000	as needed
compression fittings	stockroom		4
power supply	Trups	catalog number SDN5-24-100RED	1