Fermilab

Particle Physics Division

Mechanical Department Engineering Note

Number: MD-ENG-209 Date: Oct. 28, 2009

Project: COUPP, E-961

Project Internal Reference:

Title: Water tank and Crane requirements for SNOLAB installation

Author(s): Russ Rucinski

Reviewer(s): Andrew Sonnenschein, Eric Ramberg

Key Words: COUPP, crane, water tank, SNOLAB

Abstract/Summary: Requirements for the water tank and overhead crane to accommodate the COUPP 60 bubble chamber at SNOLAB.

Summary
The COUPP experiment requires a water tank that is 8 feet in diameter and 12 feet tall. An upper section of wall will need to be able to taken off to provide clearance for installation and removal of components. A 2 ton crane with about 10 feet of traverse travel will be needed to move components in and out of the water tank.

Equipment layout
A proposal has been submitted to locate the COUPP, E-961 bubble chamber experiment at SNOLAB. This document has been created to help define the infrastructure requirements of the water tank and the crane. The purpose of the water tank is to a.) be a neutron shield and b.) provide a stable, uniform temperature environment for the bubble chamber, and c.) be a Cerenkov detector. The purpose of the crane is to allow assembly and disassembly of the detector.

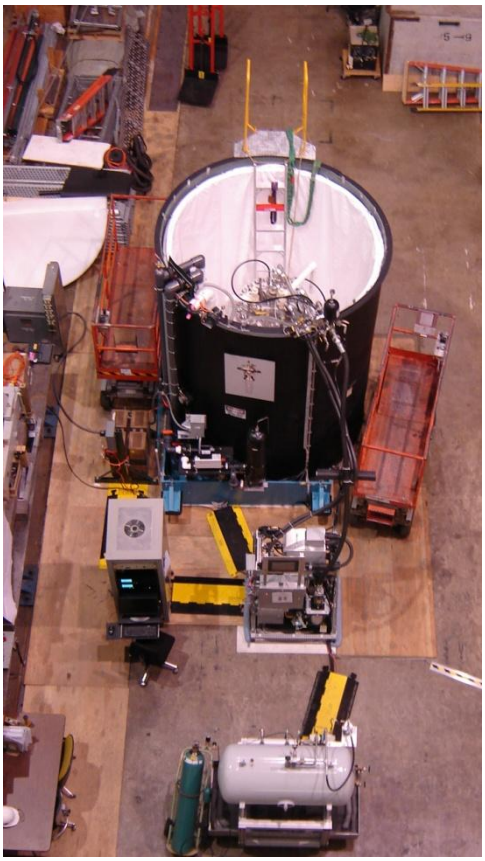

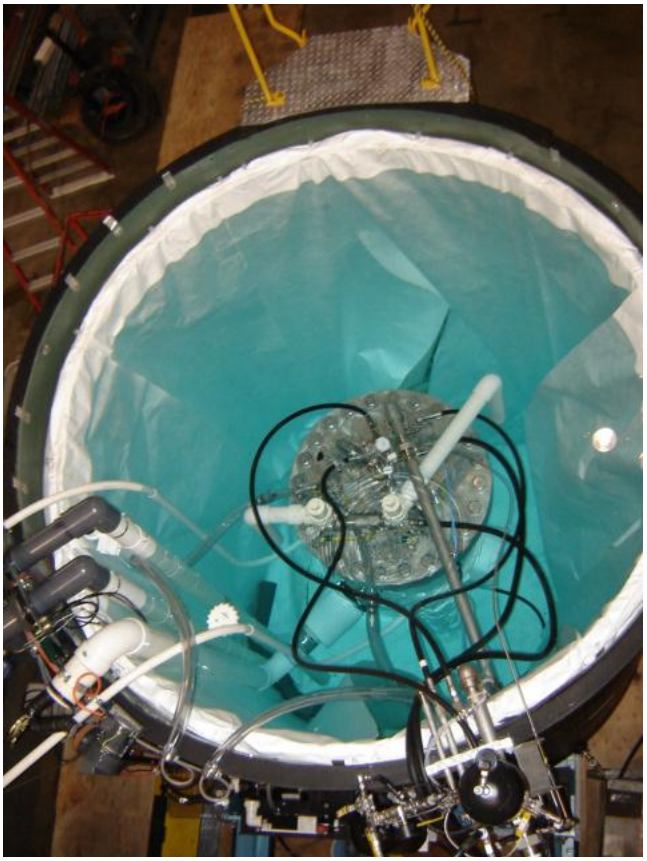

Pictures 1 and 2. The COUPP 60 equipment located at the DZero Assembly building at Fermilab during the commissioning run. The water tank filled with water.

The layout of the equipment seen in picture 1 is shown in figure 1. In the limited environment of the underground site, placement of the crane and water tank will need to be integrated with the required operating equipment. A work area outside the water tank for the bubble chamber sub-assembly also needs to be provided. A work area of roughly four foot (1.2 meter) diameter should suffice. The crane must be able to lift the sub-assembly out of the pressure vessel and place it in the work area.

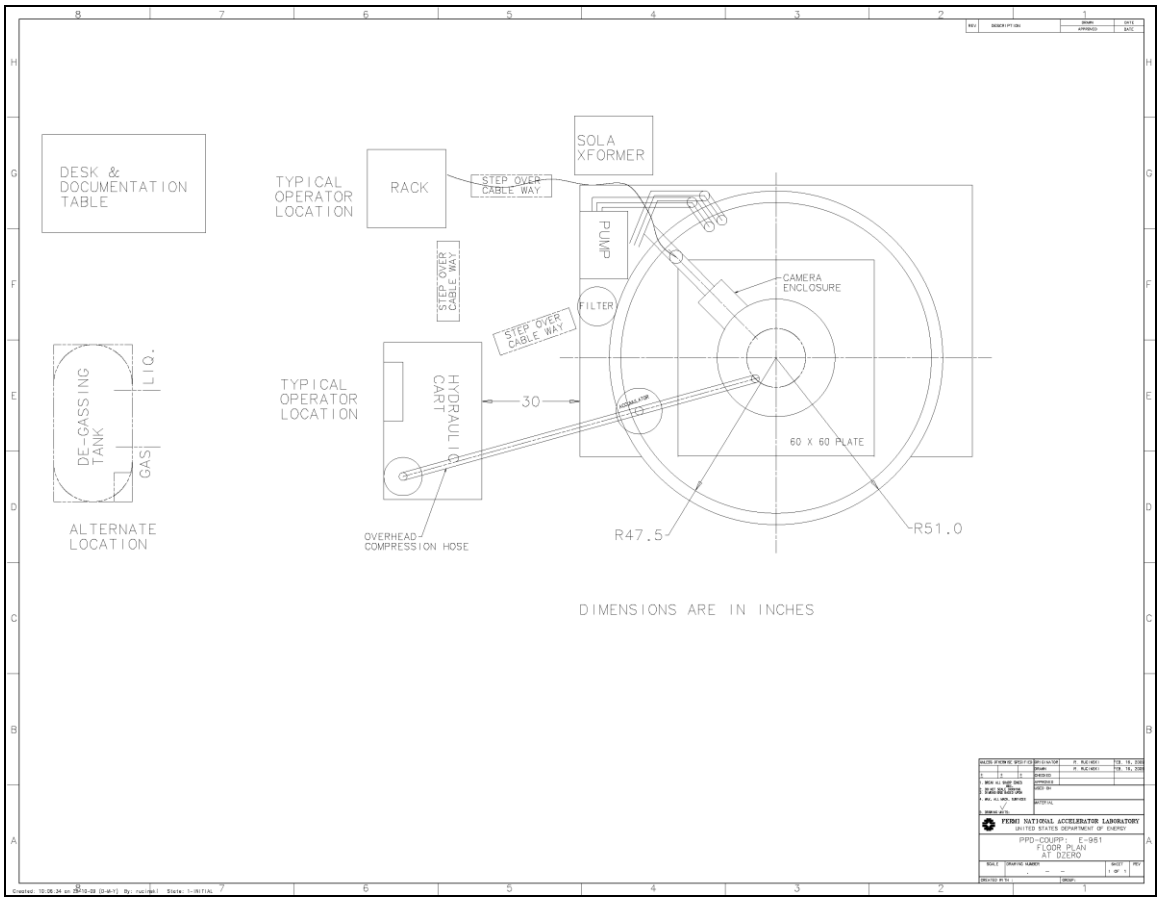

Figure 1. Experimental Equipment layout at DZero. See also Picture 1

.

Water tank at SNOLAB

A drawing depicting the COUPP 60 kg bubble chamber experiment optimally placed in a water tank is shown in figure 2. The working fluid of the bubble chamber is placed so that the water distance on the sides and below is approximately the same, 42 inches (1.07 meters). Extra water depth is provided above to allow the water tank to be used as a Cerenkov detector. We request a water tank that is nominally 8 feet diameter and 12 feet high.

The operating water level will be in the range of 6” to 12” (15 cm to 30 cm) below the rim. The water volume of the water tank is nominally 11 ft *(3.14)*4 ft^2 = 553 ft^3= 4150 gallons. With the equipment inside, 4000 gallons of water will bring it to operating level.

The water tank will need a lid that can be made to be somewhat gas tight to the extent that a gaseous nitrogen or gaseous argon purge blanket (to exclude Radon gas) may be above the water. Due to pressure swings in the tunnel, this idea may need further consideration. Perhaps a different solution can be arrived at.

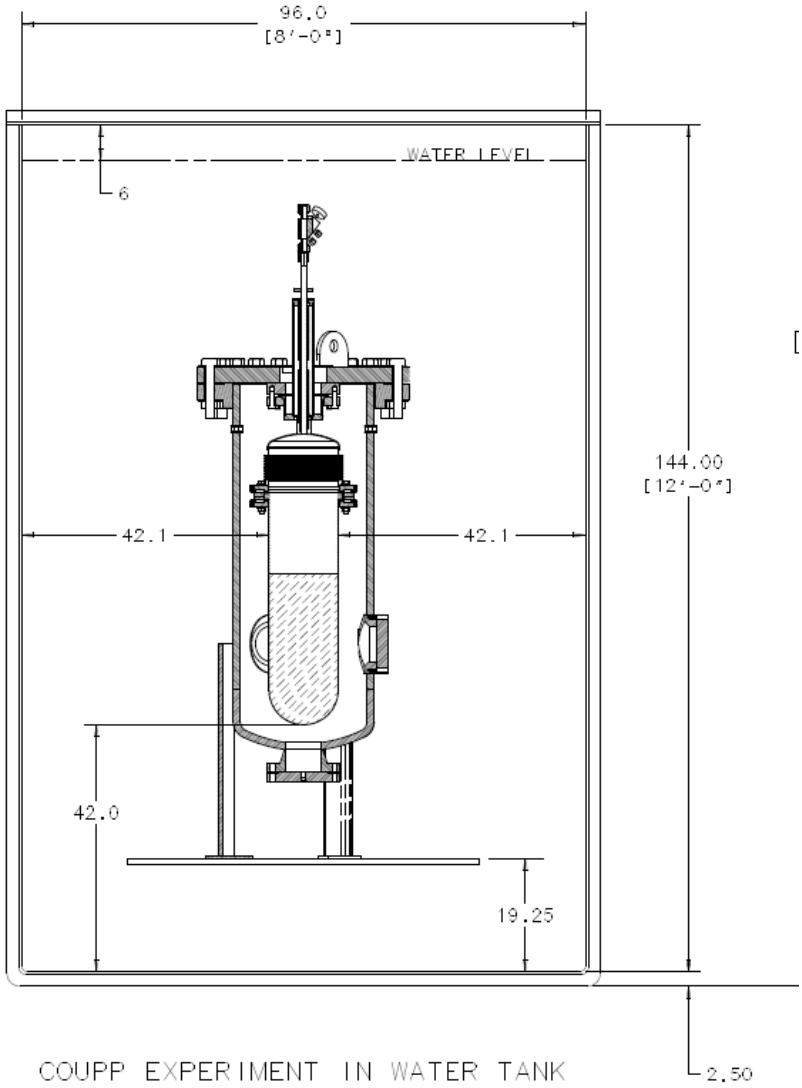

Figure 2. COUPP experiment positioned in a water tank.

Nozzles through the tank wall will make the piping installation cleaner, and make it easier to keep the vessel light tight. Table 1 lists the process lines and instrumentation that cross the tank boundary. Several of the smaller service lines could be incorporated into one larger size flanged port or given individual ports with fittings with the proper pressure rating. All instrumentation feed thru's could be incorporated into one flanged port.

As a post installation step, a minimum of 5 cm thick layer of thermal insulation will need to be applied to the outside perimeter, lid, and bottom of the tank to reduce heat loss from the water and reduce heat load into the tunnel surroundings. A 5.5 kW in-line water heater will be used to maintain and control the temperature. The water must be temperature controlled to be 0.1 degree C stability, with the temperature adjustable between 25 degrees C and 45 degrees C.

Table 1. Process and Instrumentation crossing tank boundary

Item	**Size**	**Rating**	**Port**	**Elevation**
Hydraulic recompression	1 ½” pipe	600 psi	A	High
Cooling lines	½” pipe x 2	30 psi	B & C	High
Hydraulic drain line	½” pipe	600 psi	D	Low
Hydraulic gas lines	½” pipe x 3	600 psi	E, F, G	High
Water pump discharge & suction	3” pipe x 2	50 psi	H,I	Low
Source tube	1” pipe	30 psi	J	Middle
Camera enclosure ducting	4” pipe	30 psi	K	Middle
Temperature sensors, vessel & water	½” NPT	30 psi	L	High
Level sensor, acoustic sensors	½” NPT x 4	30 psi	L	High
Gas purge lines	¼”OD x 2	30 psi	M, N	High
Tank external drain	1”	30 psi	O	Bottom edge

The water tank walls and lid need to block external light from entering the inside to allow for the use of the water tank as a Cerenkov detector.

At Fermilab a double tank design was used. A commercial 4000 gallon and 5000 gallon plastic chemical tank was purchased. See figures 3 and 4. The tops were cut off. A rolled angle was attached to the top rims of both tanks to provide circumferential stiffness. The outside of the 4000 gallon tank was insulated and inserted into the 5000 gallon tank with insulation on its bottom. The cut-off lid of the 5000 gallon tank was used to cover the operating detector. The 0.1 cm thick walls of the dark green plastic tank had to be painted with black enamel to achieve sufficient light blockage.

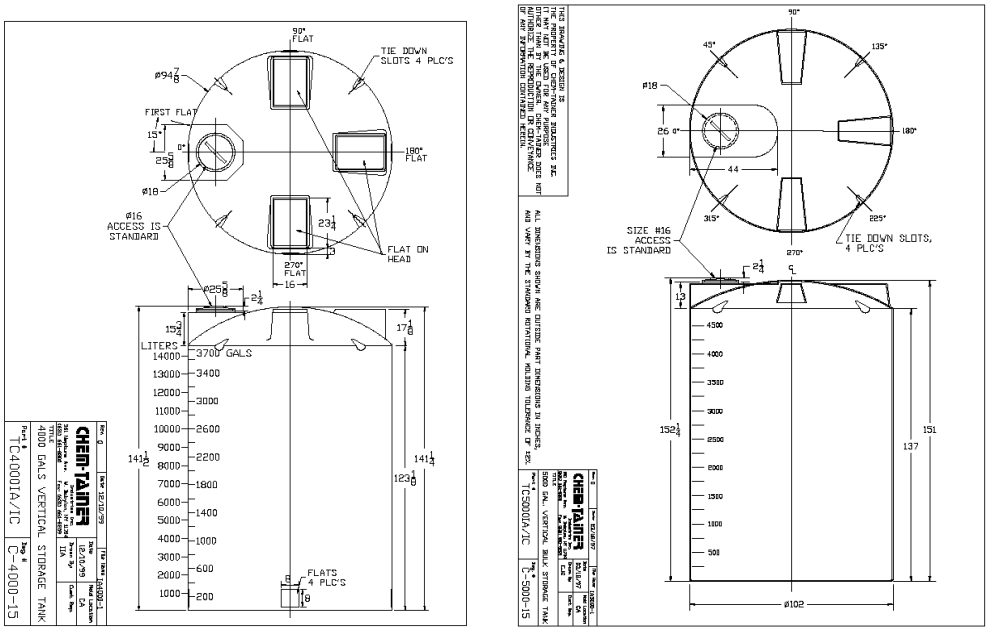

Figures 3 and 4. Water tanks used for installation at Fermilab (reference)

See figure 5 below for heights of components. See figure 6 for a cross section of the ladder tunnel. The vertical height below a crane in the tunnel will be limited to less height than that necessary to lift the inner vessel subassembly over a one piece wall (about 20 feet). Therefore it is conceded that due to the length of the components, an upper section of the tank wall will need to be removable at least on one side.

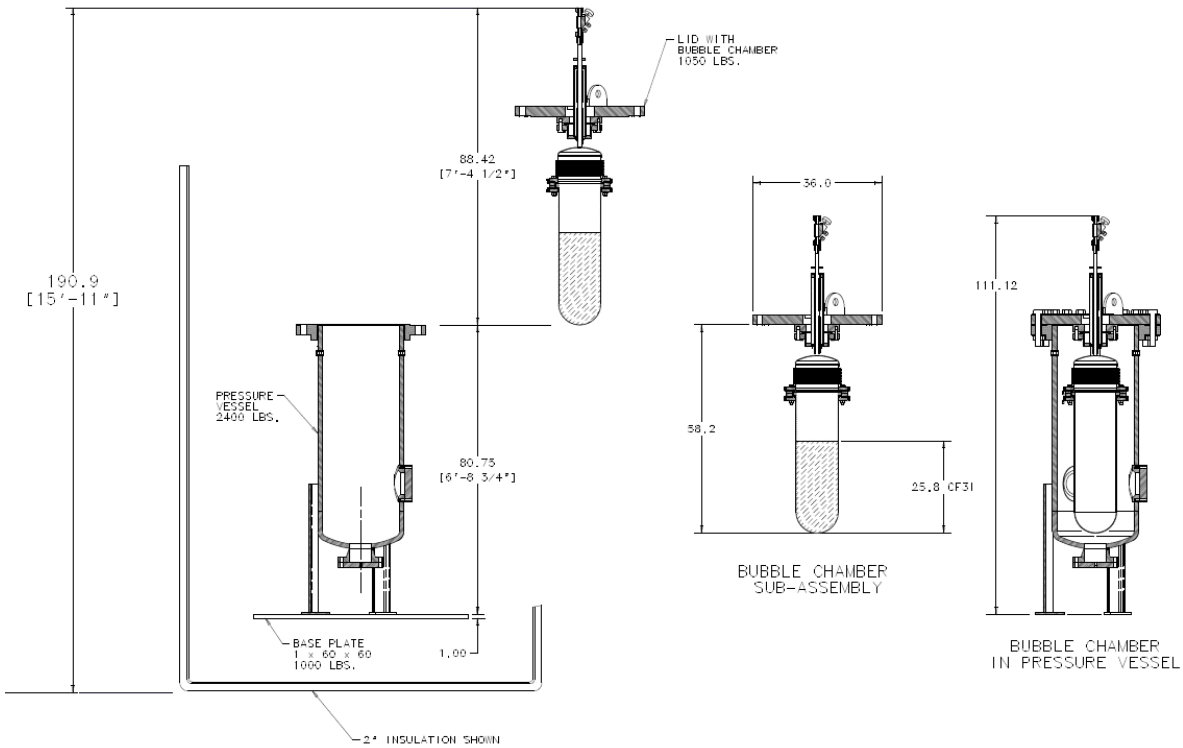

Figure 5. Height information of components.

<u>Sequence of movements</u>

The COUPP bubble chamber subassembly will be delivered underground separately from the pressure vessel. The outer pressure vessel will likely be delivered underground horizontally with the lid attached and without its base plate. The lid and pressure vessel will weigh 900 lbs plus 2400 lbs = 3300 lbs. We are currently using a 1" x 60" square base plate that weighs 1000 lbs. We will plan to provide a lighter weight base plate or outrigger to keep the assembled detector to less than two tons (when no fluids are present). For now we can assume the outriggers will be 200 lbs. The first order of business will be to upright the vessel and bolt it onto the base plate or outrigger feet. Then we will unbolt the lid and place it on an elevated work stand (provided by Fermilab). The empty lower portion of the pressure vessel with outriggers can then be placed inside the water tank. The load to be moved will be about 2600 lbs. The high purity quartz bubble chamber will arrive in its own special handling fixture. The bubble chamber will be unpacked, positioned below the lid and then elevated and bolted to the underside of the lid. The lid with bubble chamber attached, about 1050 lbs, will then need to be hoisted and placed into the outer pressure vessel that is in the center of the water tank.

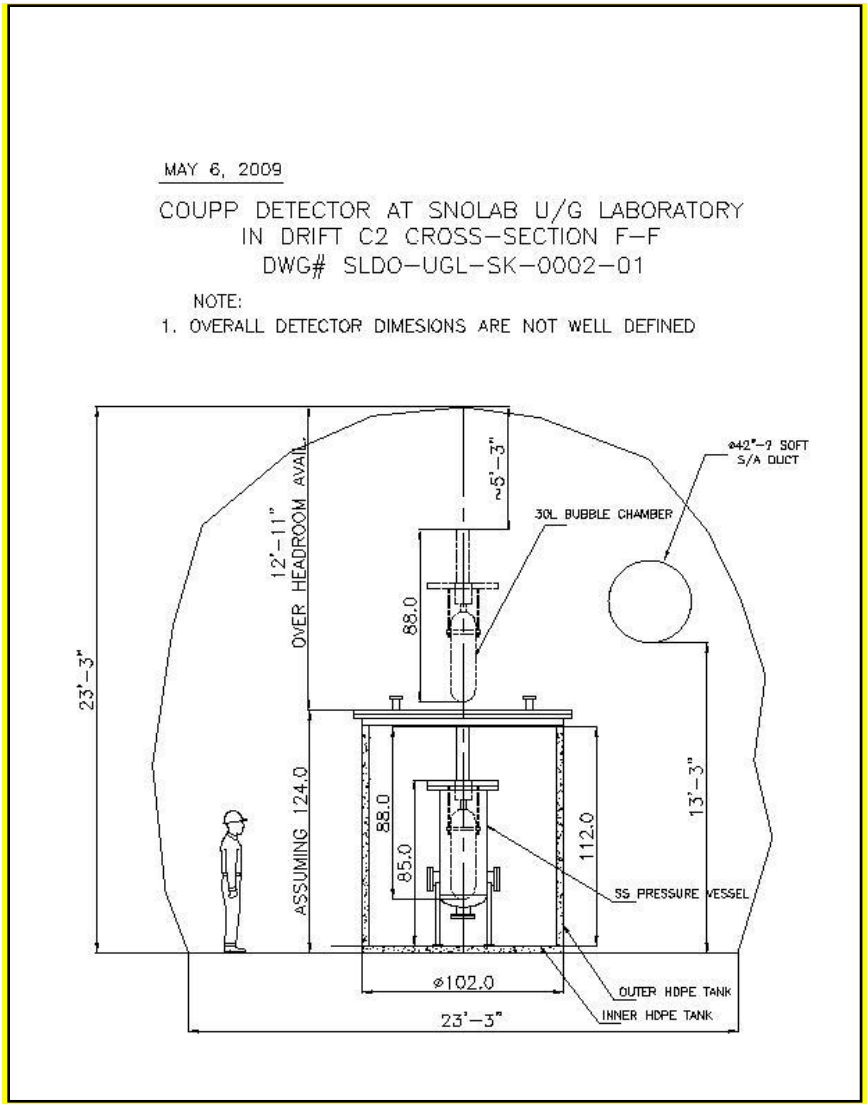

Figure 6. Preliminary Layout of COUPP detector in Ladder lab

Crane

The crane configuration could be a jib crane, gantry crane, bridge crane, or other type of crane. A two ton capacity should be sufficient to move all the pieces. The load hook must be able to be positioned over the center of the water tank and lift 3800 lbs and translate it a minimum of 10.0 feet (3.0 meters) from the center of the water tank to a position outside of the water tank. It is assumed that the crane's vertical travel will exceed the needed lift height. Pictures 3 and 4 show some of the rigging activities at Fermilab.

Picture 3. Insertion of the assembled COUPP vessel into a water tank at Fermilab

Picture 4. Insertion of the COUPP bubble chamber (attached to the lid) into the pressure vessel.