Fermi National Accelerator Laboratory
Particle Physics Division

Mechanical Department Engineering Note

Number: *MD-Eng/01-005* **Date:** *25 Sept. 2001*

Project: *CDF Run 2B Silicon*

Project Internal Reference: *N/A*

Title:

CDF SVX Run 2B Ladder Cooling For Layers 1 though 6

Author(s): *Greg Derylo*

Reviewer(s): ---

Key Words: *CDF / Silicon*

Abstract/Summary:

Ladder plumbing was studied with 42.5% ethylene glycol supplied at -15 °C. Heat loads, flowrates, temperature rises, pressure drops, convection coefficients, ladder ganging, and slot grouping were investigated.

Thermal models were used to demonstrate that sensor temperatures in layers 2 though 6 will be maintained well below the maximum allowable average temperature specifications. Analysis of the present layer 1 configuration indicates that average temperatures remain below the limit value but that peak temperatures may exceed the value by a few degrees.

Applicable Codes: *N/A*

1.0 INTRODUCTION

The latest design for the SVX2B detector can be seen in Appendix 1 (end view) and Appendix 2 (ladder views). The ladders (the same design is used for layers 2 though 6, with the same basic concept used for L1) are constructed of single-sided silicon mounted on a structural core of carbon fiber and foam with built-in, internal cooling channels and an integral readout cable used to connect the hybrids to the mini-portcard (miniPC) at the outboard end of the ladder. Sensor temperature requirements are shown in Table 1.

Table 1 – Maximum Allowable Sensor Temperature[1] by Layer [1]

Layer	Max Sensor Temp (°C)
6	+15
5	+15
4	+15
3	+10
2	+10
1 (axial)	-5
1 (90°)	-5
0	-5

The purpose of this study is first to evaluate the coolant flowrate / pressure drop characteristics for L1 through L6. Then, a thermal analysis of ladder temperatures will evaluate predicted response to the specifications.

2.0 ANALYSIS

2.1 Plumbing Investigation

The cooling system developed for Run 2A, which is currently in operation and which will also be used for Run 2B, is using 30 wt.% ethylene glycol in water, which freezes at about -14°C. Operation of the system at -10°C is not expected to provide adequate margin to the -5°C sensor specification for the innermost layers, so a change in coolant will be required. For this analysis, a concentration of 42.5 wt.%, which freezes at about -25°C, is assumed. This may allow operation down to -20°C, although a supply temperature of -15°C is assumed here. Fluid properties for this coolant are shown below:

Table 2 – Fluid Properties of 42.5 wt.% Ethylene Glycol in Water [2]

Temperature (°C)	ρ (kg / m^3)	c_p (J / kg K)	k (W / m K)	μ (cp)
-20	1071.98	3334	0.371	15.75
-15	1070.87	3351	0.377	11.74
-10	1069.63	3367	0.383	9.06
-5	1068.28	3384	0.389	7.18
0	1066.80	3401	0.395	5.83
5	1065.21	3418	0.400	4.82
10	1063.49	3435	0.405	4.04
15	1061.65	3451	0.410	3.44
20	1059.68	3468	0.415	2.96

[1] This limit was later clarified to specify that these limits are for average rather than peak Si temperatures [10].

The integral cooling line is to be fabricated from PEEK tubing with a 0.183 inch (4.648 mm) OD with a 4 mil wall thickness. PEEK is selected for its resistance to radiation-induced damage. It is to be formed into a rectangular cross section with a 1.88 mm outside height and a 6 mm outside width. The resulting inside channel should be a rectangle of 1.676 x 5.797 mm with corner radii of 0.584 mm. This corresponds to a flow area of 9.423 mm^2 and a hydraulic diameter of 2.70 mm.

For ladders in layers 2 through 6, this tube runs about 0.7 m in Z through the core of the ladder, where it turns 180° and runs back out. A length of 0.6 is assumed for L1. No bend pressure drop information is currently available, so an equivalent L/D of 100 is assumed here. When ladders are daisy-chained together, it is assumed that a 0.15 m length of 0.172" ID tubing is used.

Due to the high coolant viscosity, small tube diameters, and low flowrates, the tubes will be in the laminar flow regime. Fully-developed laminar flow relations are used to estimate pressure drop. Nusselt numbers are estimated for thermally-developing laminar flow in rectangular ducts with two walls conducting using the relationships described in Reference 3. Flow at the 180° bend is assumed to be turbulently mixed.

The following heat loads are assumed:

- The SVX4 chip power is less than 400 mW [4]. It is assumed that there are 15 chips on a L1 ladder. For layers 2 though 6, there are 24 chips / ladder.
- MiniPC power is currently expected to be less than 4 W. 3 W is assumed for L1.
- Heat generation resulting from sensor radiation damage is predicted at 30 fb^{-1} with the relations presented by Nicola Bacchetta [5] at a bias voltage of 250 V [6] (800 V assumed for layers 0 & 1). The sensor temperature assumed is the maximum allow value for each layer reported in Table 1.

  Fit to Nicola's leakage currents plots at 30 fb^{-1} for 300 μm silicon:

  $$I_{leak}\ (\mu A/cm^2) = [736.61 \times R^{-1.6699}] \times [0.1553 \times e^{(0.089714 \times T)}] \qquad \text{("R" in cm and "T" in °C)}$$

  Layer by layer heat load, with inner and outer values shown for castellated layers:

Layer	Load / Ladder (W)	Ladders / End
0	1.27 inner / 0.93 outer	6 / 6
1	2.06[2]	6
2	2.79	6
3	1.74 inner / 1.28 outer	6 / 6
4	1.40 inner / 1.16 outer	8 / 8
5	0.88 inner / 0.76 outer	10 / 10
6	0.61 inner / 0.54 outer	12 / 12

- Convective load – a natural convection coefficient of 2 W/m^2K is assumed with a 20°C ΔT. Assuming an area of 2 x 40 x 600 = 48,000 mm^2 for a L1 ladder and 2 x 50 x 700 = 70,000 mm^2 per ladder in L2 through L6, this results in 1.9 W/ladder in L1 and 2.8 W/ladder in layers 2 through 6.
- For a layer 1 ladder, the maximum head load is therefore (15 x 0.4) + 3 + 2.06 + 1.9 = 13.0 Watts.
- For an outer ladder, the maximum heat load is therefore (24 x 0.4) + 4 + 2.79 + 2.8 = 19.2 Watts.

[2] Although the layer 1 90° sensor will be made from thinner silicon, 300 μm was conservatively assumed for the determination of heat generation.

The EES computer code [7] was used to evaluate ΔT, ΔP, and h vs. a range of flowrate values – a copy of the code input is included in Appendix 3. The results of this study are shown in Figures 1A/B/C/D for the Layer 1 model and in Figures 2A/B/C/D for an outer layer ladder. Responses are shown with one, two and three ladders plumbed in series. "Daisy-chaining" helps minimize the total number of inlet/outlet lines needed, thus simplifying the system. Figures 1C and 1D are particularly helpful in evaluating the possibility of daisy-chaining. With an available pressure drop of 4.5 psi, the resulting flowrate and ΔT are shown in Table 2.

Table 2 – Plumbing Calc Results for 1, 2, and 3 Ladders in Series with ΔP = 4.5 psi

Layer		1 Ladder	2 Ladders	3 Ladders
Layer 1	Flowrate: Tout – Tin:	0.28 lpm 0.8 °C	0.15 lpm 2.9 °C	0.11 lpm 6.1 °C
Layers 2 through 6	Flowrate: Tout - Tin	0.25 lpm 1.3 °C	0.13 lpm 4.8 °C	0.10 lpm 9.5 °C

With this amount of available ΔP, it would appear that for Layer 1, with its low temperature requirement, no more than two ladders could be plumbed in series. Two also looks like an acceptable number for the outer barrel ladders. It is therefore proposed that ladders in these layers be plumbed in groups of two.

With five inlet/outlet slots through the CDF 30° End Plug region available per end for SVX plumbing, the breakdown of heat loads and flowrates with slot arrangements is shown in the following Table.

Table 3 – Plumbing Summary of Heat Loads, Flowrates, and System Configuration

Layer	Heat Load per End (W)	No. of Supply & Returns Sets per End	Flowrate per End (lpm)	Slot Manifolding Needed per End	Slot Flowrate per End (lpm)	Nominal Slot DT (°C)
0	TBD	TBD[A]	TBD	1-to-4 or 1-to-5 [1]	0.45 + L0	TBD
1	6*13.0 = 78	3	3*0.15 = 0.45			
2	6*19.2 = 115	3	3*0.13 = 0.39	1-to-9	1.17	4.7
3	12*17.9 = 215	6	6*0.13 = 0.78			
4	16*17.7 = 283	8	8*0.13 = 1.04	1-to-8	1.04	4.5
5	20*17.2 = 344	10	10*0.13 = 1.30	1-to-10	1.30	4.4
6	24*17.0 = 408	12	12*0.13 = 1.56	1-to-12	1.56	4.4
Run 2B Totals	1443 + L0	42 + L0	5.52 + L0	---	5.52 + L0	---
Run 2A Totals [8]	1320 + L00	---	12870 g/min (12.28 lpm) plus L00	---	---	1.5°C BHs 2.0°C PCs

Note A: Although L0 plumbing is not addressed here, it is hoped that the 6 axial lines that run through the entire length of the detector (crossing Z = 0, unlike the other ladders) be grouped as follows:

- At one end, two lines are fed, with the far ends of those tubes looped back into two more tubes, resulting in the supplies and returns being on the same end of the detector.
- At the other end, one tube is connected to the supply, where its far end is looped around to the last remaining tube, resulting in no net flow crossing from one end of the detector to the other end.

This configuration results in two supply/return sets on one end of the detector and one supply/return set on the other end.

Figure 1A – Layer 1 ΔT vs. Flowrate for 1, 2, and 3 Ladders in Series

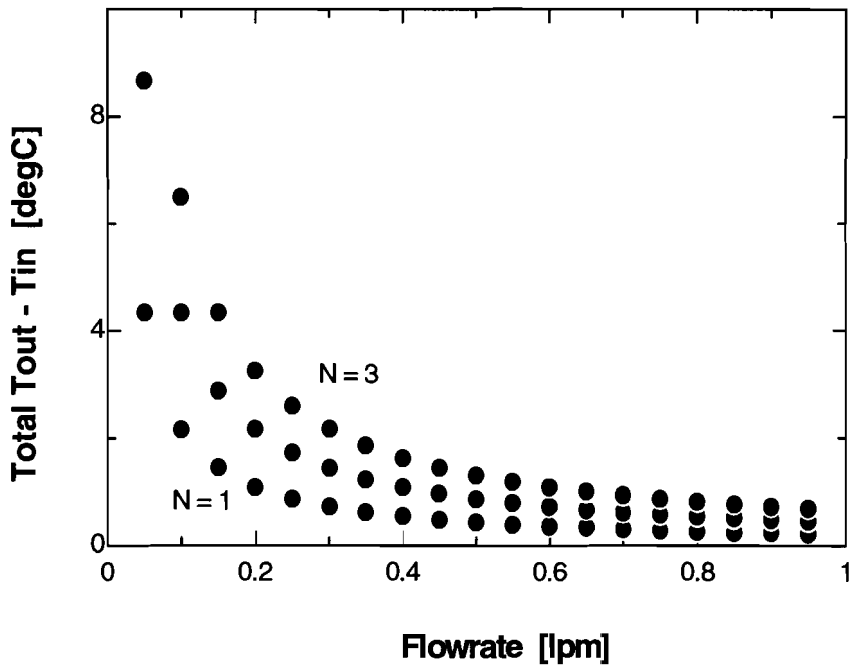

Figure 1B – Layer 1 ΔP vs. Flowrate for 1, 2, and 3 Ladders in Series

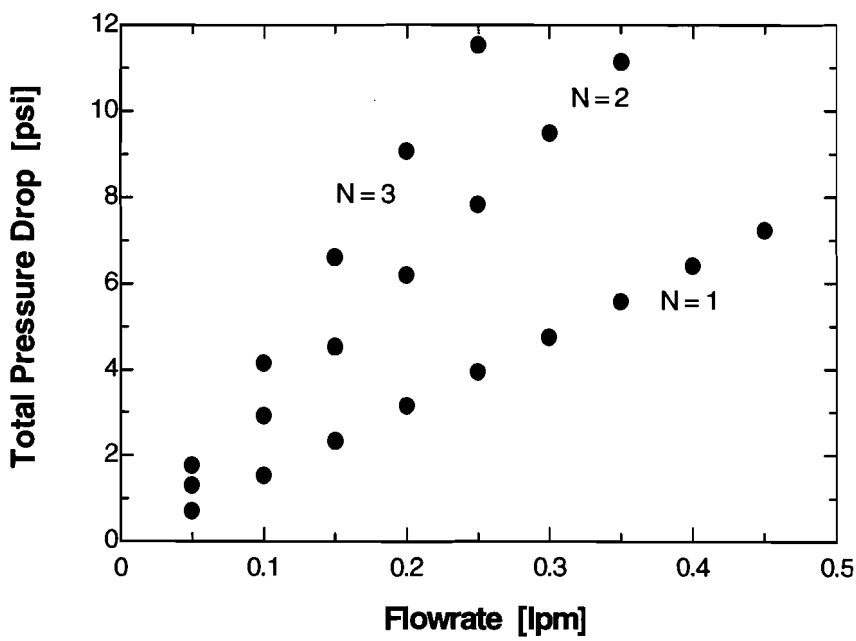

Figure 1C – Layer 1 ΔP vs. ΔT for 1, 2, and 3 Ladders in Series

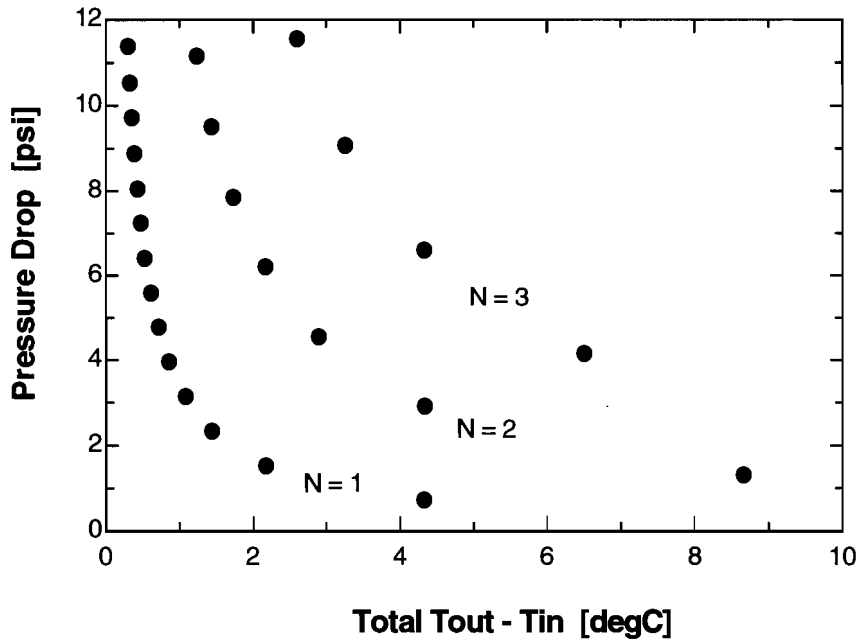

Figure 1D – Layer 1 Heat Transfer Coefficient vs. Flowrate for 1, 2, and 3 Ladders in Series

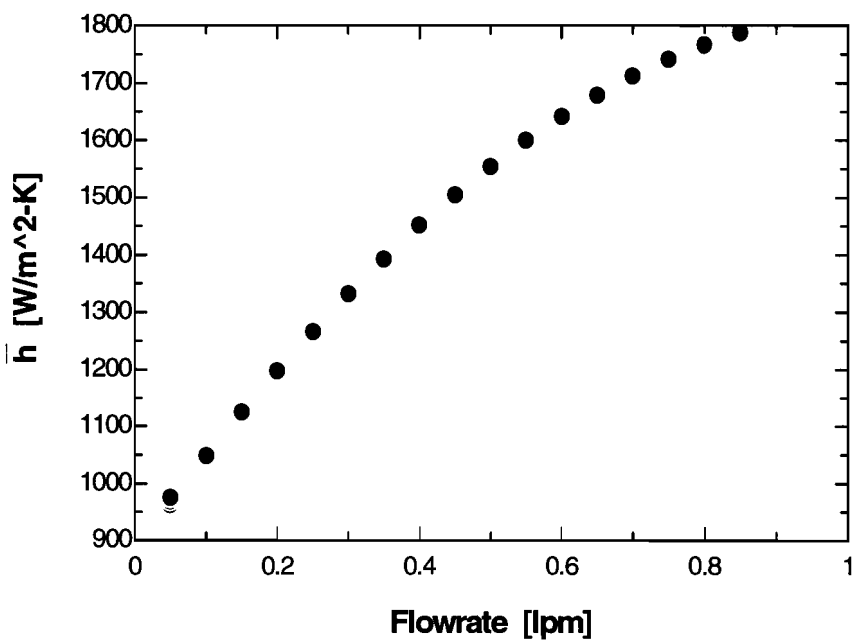

Figure 2A – Layer 2 through 6 ΔT vs. Flowrate for 1, 2, and 3 Ladders in Series

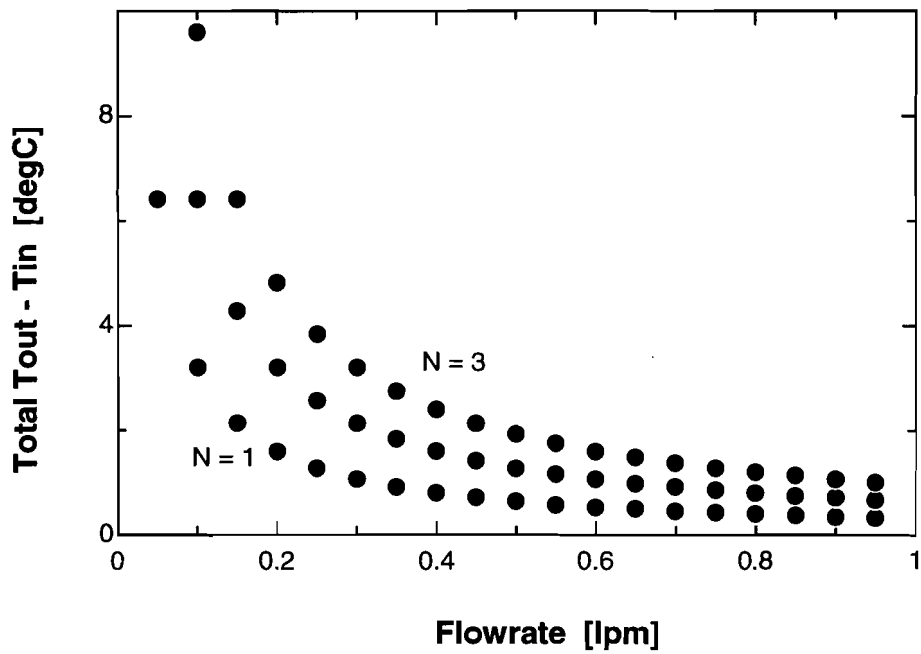

Figure 2B – Layer 2 through 6 ΔP vs. Flowrate for 1, 2, and 3 Ladders in Series

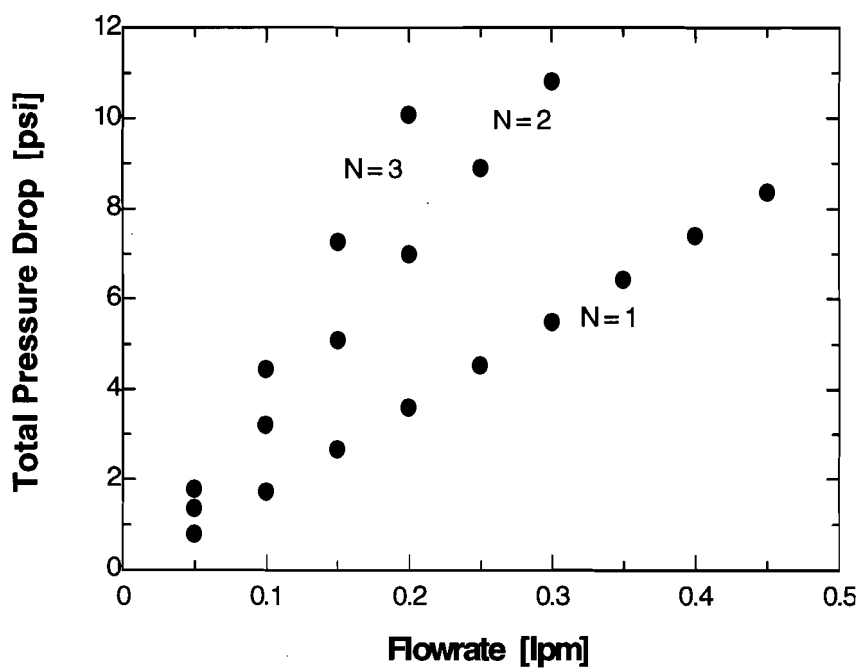

Figure 2C – Layer 2 through 6 ΔP vs. ΔT for 1, 2, and 3 Ladders in Series

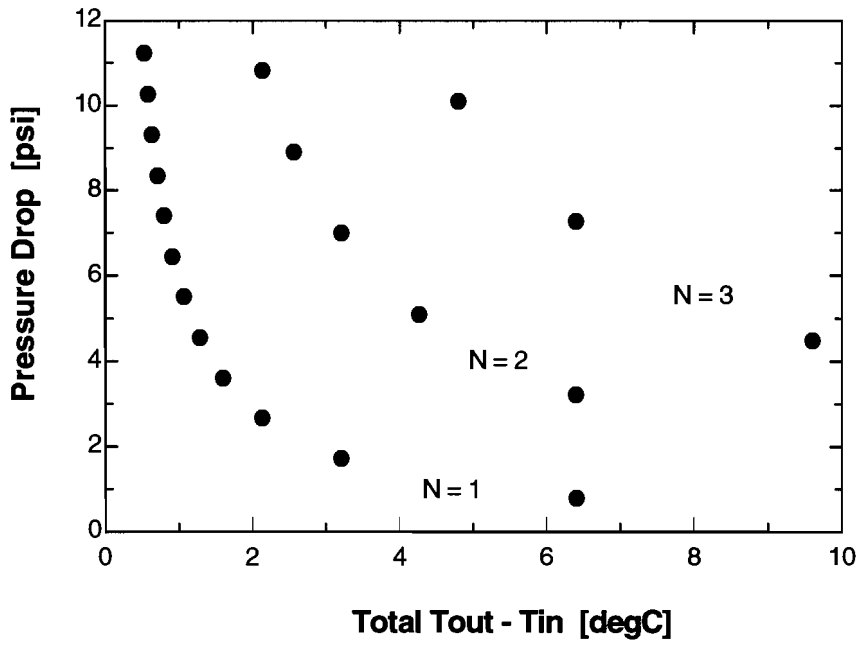

Figure 2D – Layer 2 through 6 Heat Transfer Coefficient vs. Flowrate for 1, 2, and 3 Ladders in Series

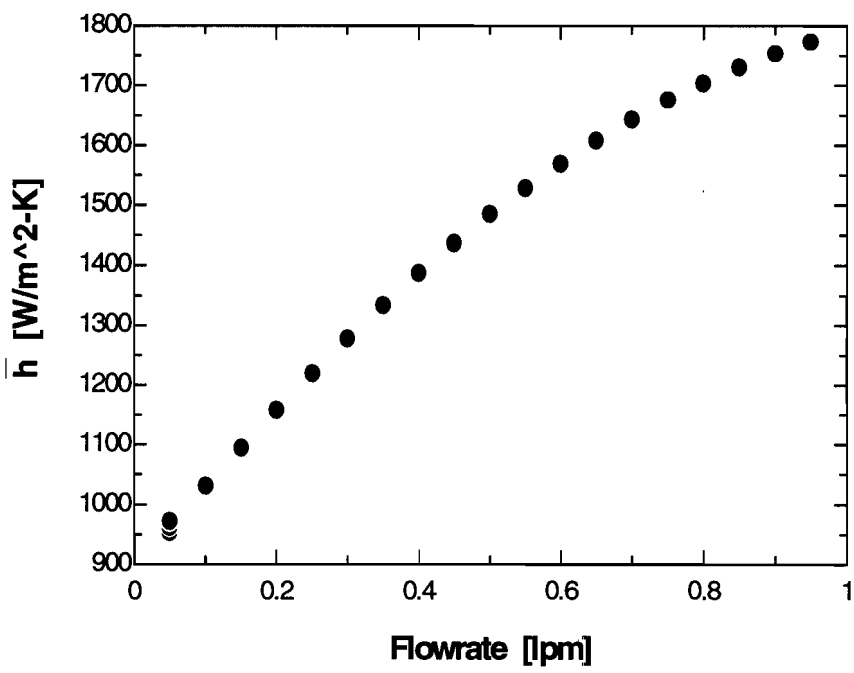

2.2 Sensor Temperature Investigation (Layers 2 through 6)

Temperature estimates in the stave were investigated in two parts. First, a 3-D finite difference model was developed with the EES code to perform studies in support of the Run 2B Workshop at UCSB in August of 2001. Then, in September 2001 an ANSYS finite element model was developed by Ang Lee of FNAL in order to benchmark the FDE model.

2.2.1 FDE Model (Layers 2 through 6)

The FDE model consisted of three analyzed layers: hybrid substrate, Si sensor, and composite skin on the ladder core. Chip heat loads were applied uniformly over their footprint areas. Since the hybrid is narrower than the sensor and the ladder core and end-of-hybrid boundary is painful to model, material outboard of the hybrid width is ignored. This is conservative since the heat generation in the Si is very small and the added material would only help to distribute heat. The following layup configuration was assumed in the model. Temperature nodes were in the BeO, silicon, and carbon fiber; the intermediate layers were modeled as through-plane resistances.

Table 4 – Makeup of the Outer Ladder FDE Model (Base Case)

Description	**Conductivity (W/mK)**	**Thickness (mm)**	**Area (mm)**	**Heat Generation (W)**
Ambient Convection (T = 0°C)	[h = 2 W/m^{2}K]	---	Same as silicon	---
SVX4 Chips	---	---	6 x 9	0.5 each
BeO Substrate	248	0.381	36 wide x 32 long	0
Glue	0.1	0.075	Under hybrid	0
Silicon Sensor	148	0.3	36 wide x 92 long	From leakage current at R = 45 mm, 30 fb^{-1}, 250V, and 10°C
Glue + Bus Cable + Glue	0.1 0.12 0.1	0.075 0.110 0.075	Under Si	0 0 0
90/0/0/90 Carbon Fiber Skin (K13D2U assumed)	$k_0 = 200$ $k_{90} = 200$ $k_\perp = 0.5$	0.254	Under Si	0
Glue + PEEK Tube Wall	0.1 0.25	0.075 0.10	Two 5 mm strips 14 mm apart	0
Coolant at -15°C [due to warm-up in the coolant along the flowpath, actual coolant temperatures may be warmer by several degrees in some locations]	[h = 900 W/m^{2}K]	---	In tube	---

The maximum silicon temperatures found for this case and for several sensitivities are shown in Table 5. The temperature plots from the base case are shown in Figures 3A/B/C, which are self-explanatory.

Figure 3A – Base Case Hybrid Substrate Temperature (L2 – L6 Base Case)

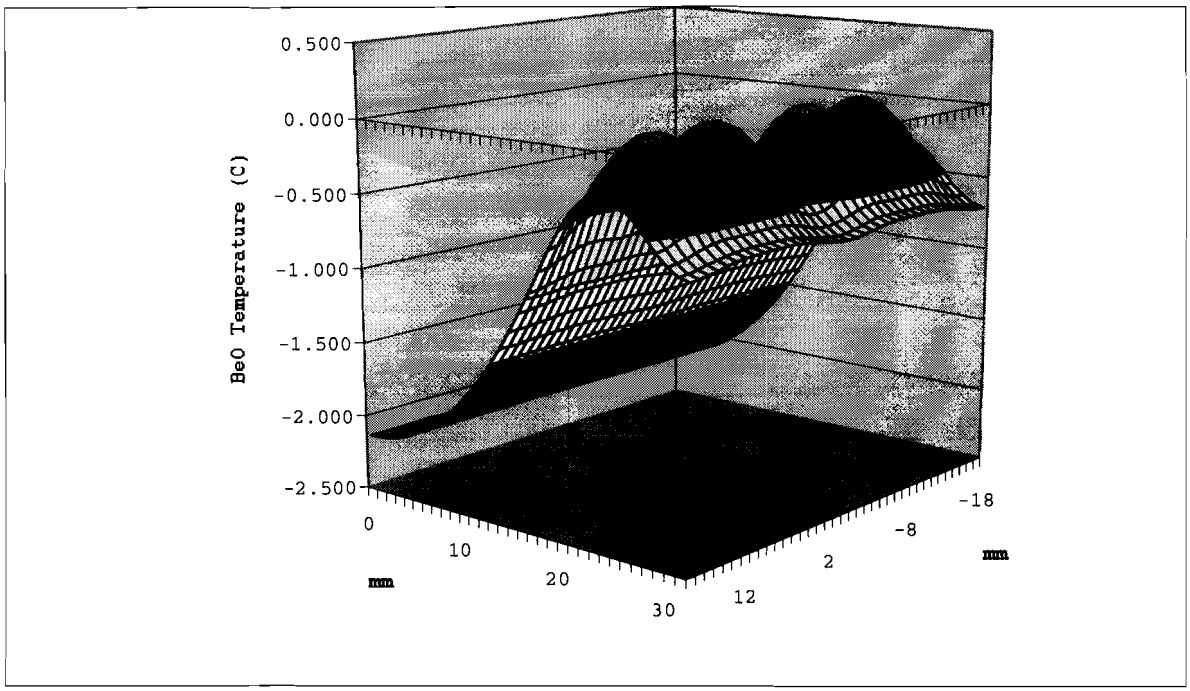

Figure 3B – Base Case Silicon Temperature (L2 – L6 Base Case)

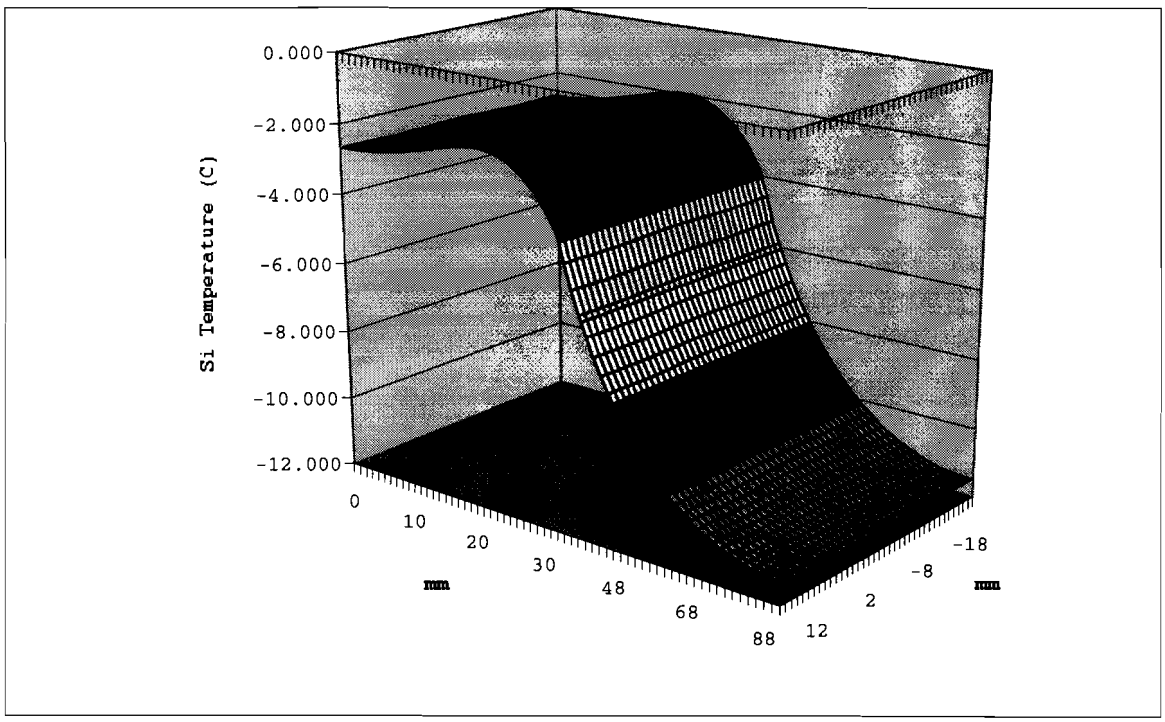

Figure 3A – Base Case Composite Skin Temperature (L2 – L6 Base Case)

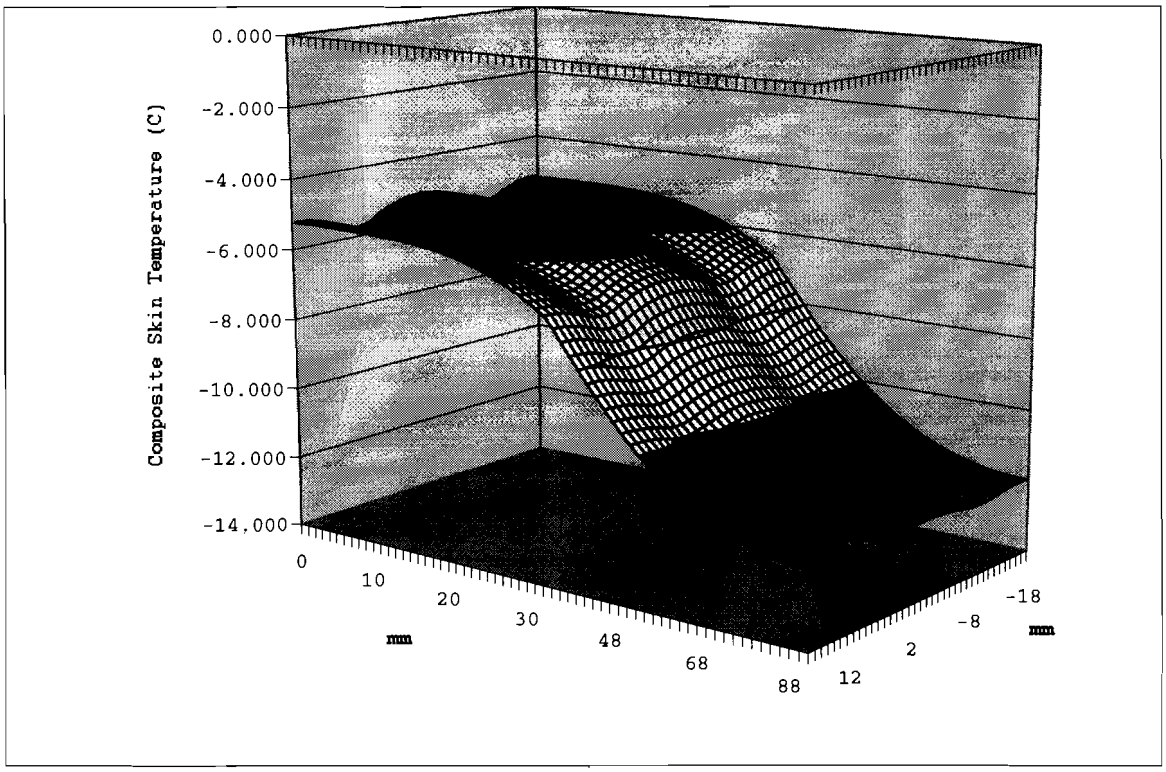

Table 5 – Maximum Silicon Temperatures

Case	Description	Max. Sensor Temperature (°C)	ΔT Compared to Base Case (°C)
1	Base Case	-1.9	---
2	Leakage current = 0	-2.6	-0.5
3	400 mW Chip Power	-4.3	-2.4
4	Composite Skin k_0 = 1.5 W/mK	-0.8	+1.1
5	Glue conductivity = 0.05 W/mK	+1.7	+3.6
6	Cooling tube flat width decreased from 5 to 4 mm	-0.1	+1.8
7	Coolant "h" reduced from 900 to 800 W/m^2K	-1.5	+0.4

With maximum temperature specifications of +10°C in Layers 2 and 3 and +15°C in Layers 4 through 6 (from Table 1 above), these results indicate that large margins exist between the expected and allowable values.

2.2.2 FEA Model for Layers 2 through 6

An ANSYS FEA model of the base case above was generated by Ang Lee of the FNAL Engineering Analysis group in order to benchmark the reliability of the FDE model. The model requested is different than that used in the FDE analysis in two very important respects:

1. The full width of the ladder is investigated, crediting the diffusion of heat in the material beyond the sides of the hybrid, and
2. An extra sensor was added from the readout set behind the hybrid, which more correctly models the dissipation of heat away from the hybrid along the length of the ladder.

Figure 4A – Outer Ladder BeO Temperature Distribution (1/2-width shown)

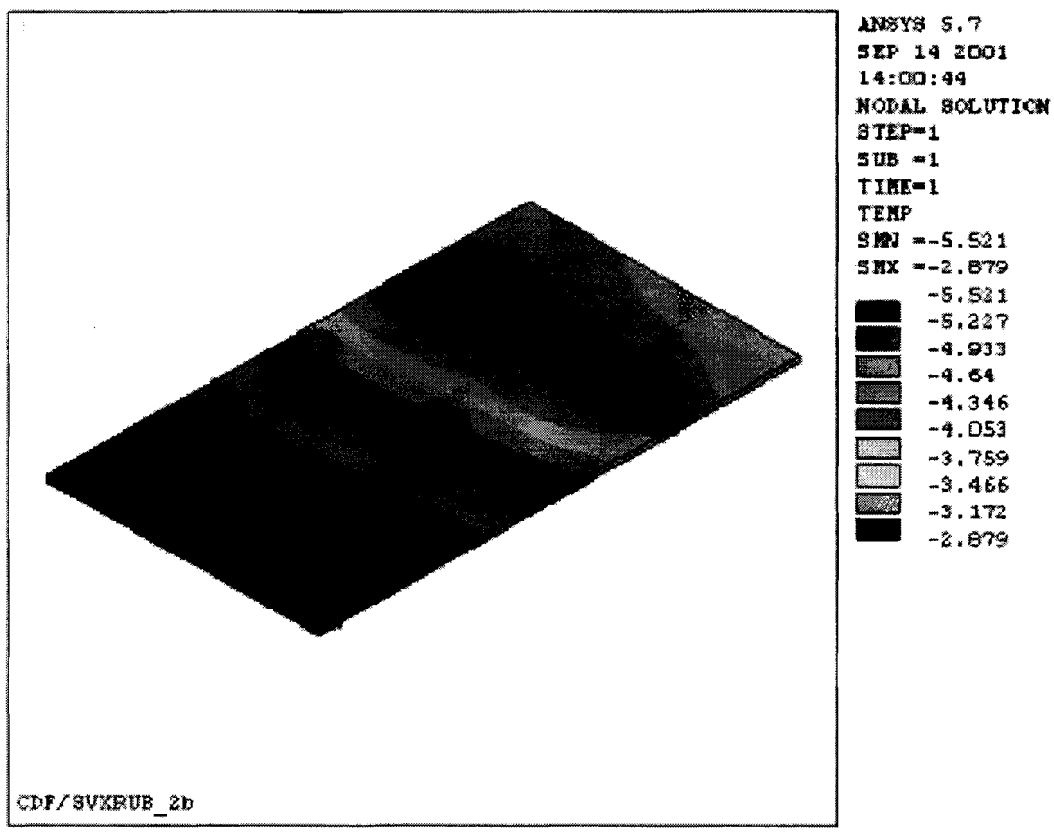

Figure 4B – Outer Ladder Sensor Temperature Distribution (1/2-width shown)

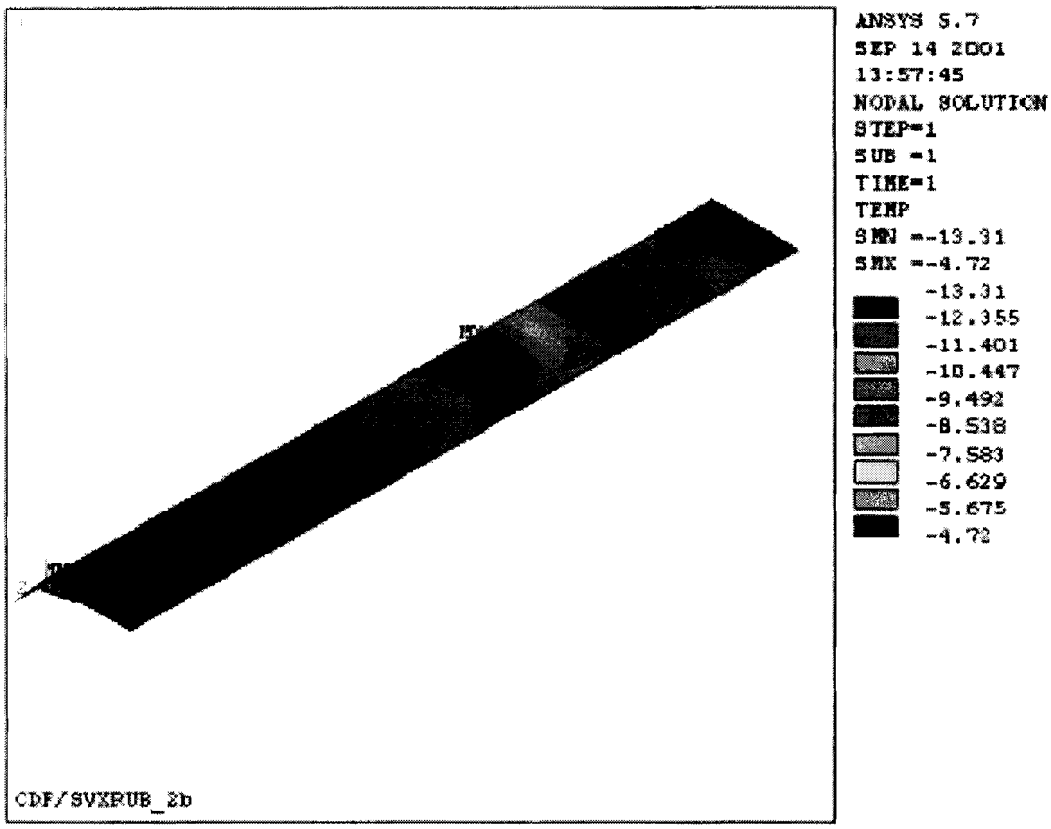

As expected, the maximum temperature is found underneath the portion of the hybrid with the chips. The sensor without the on-board hybrid is maintained to within 5°C of the coolant temperature. The maximum silicon temperature found, -4.7°C, is colder than that –1.9°C predicted with the FDE model. This difference is most likely due to the differences in the model geometry, as described above. The sensitivity studies performed with the FDE model are therefore still considered to reasonably represent trends in performance.

The average silicon temperature, based on average subsection temperatures spread over each colored section, is about –10.5°C.

Figure 4C – Outer Ladder CF Skin Temperature Distribution (1/2-width shown)

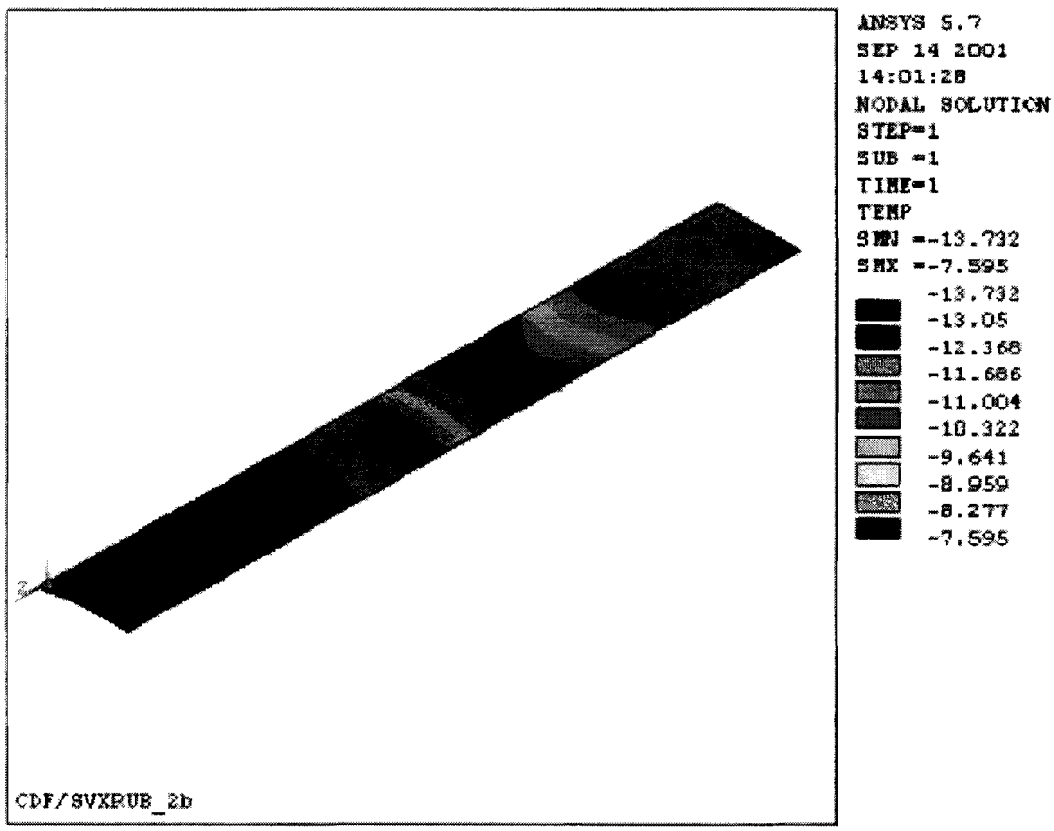

2.3 Sensor Temperature Investigation (Layer 1)

Since the August UCSB workshop, a proposed design for the Layer 1 ladders has been more generally accepted. It is similar in nature to the outer ladders except that

1. it is narrower (27.4 mm),
2. the 90° sensor is wider than the core (37.0 x 74.7 mm) [0.2 mm thickness assumed in model, but 0.3 mm was used to determine heat generation],
3. the axial sensor is narrower than the core (14.8 x 74.7 mm), and
4. the hybrids are different:
   - Axial: two-chip hybrid, with chips centered over Si
   - Stereo: three-chip hybrid, with chips centered over Si but with an offset substrate

The ANSYS model developed for the outer stave was then modified to account for these changes.

Figure 5A – L1 Axial Hybrid Temperature Distribution

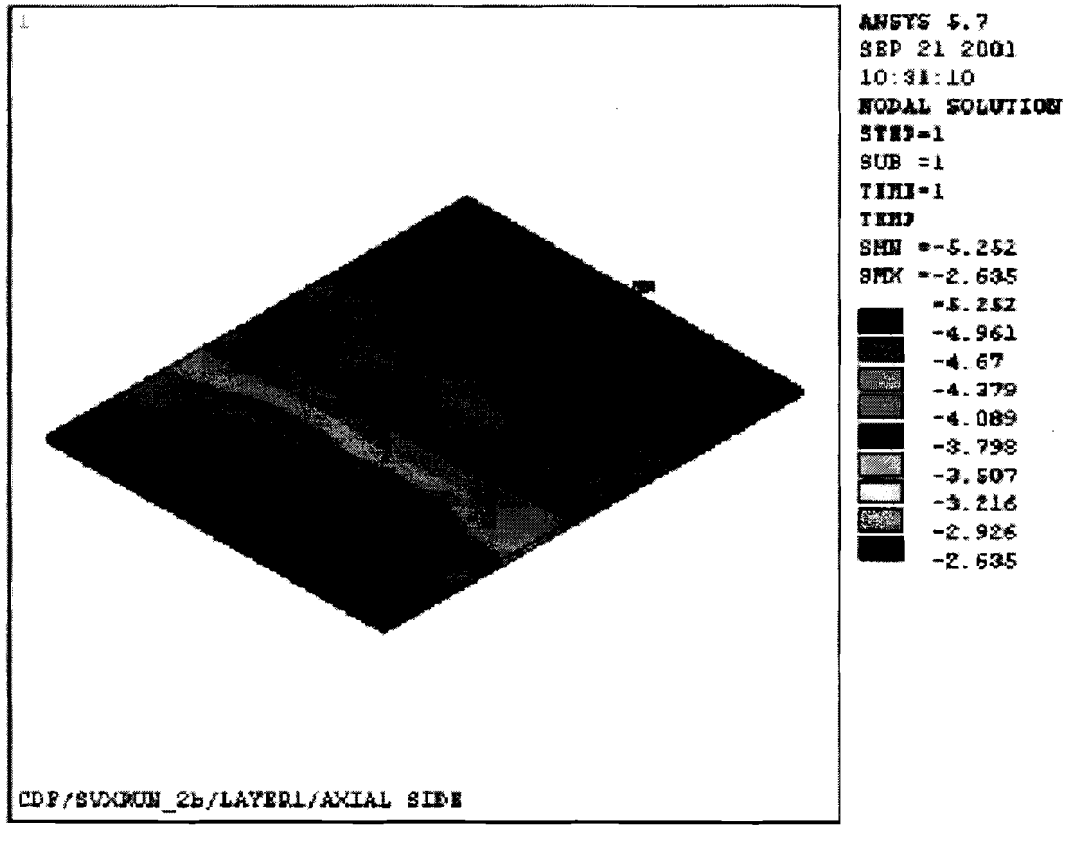

Figure 5B – L1 Axial Sensor Temperature Distribution

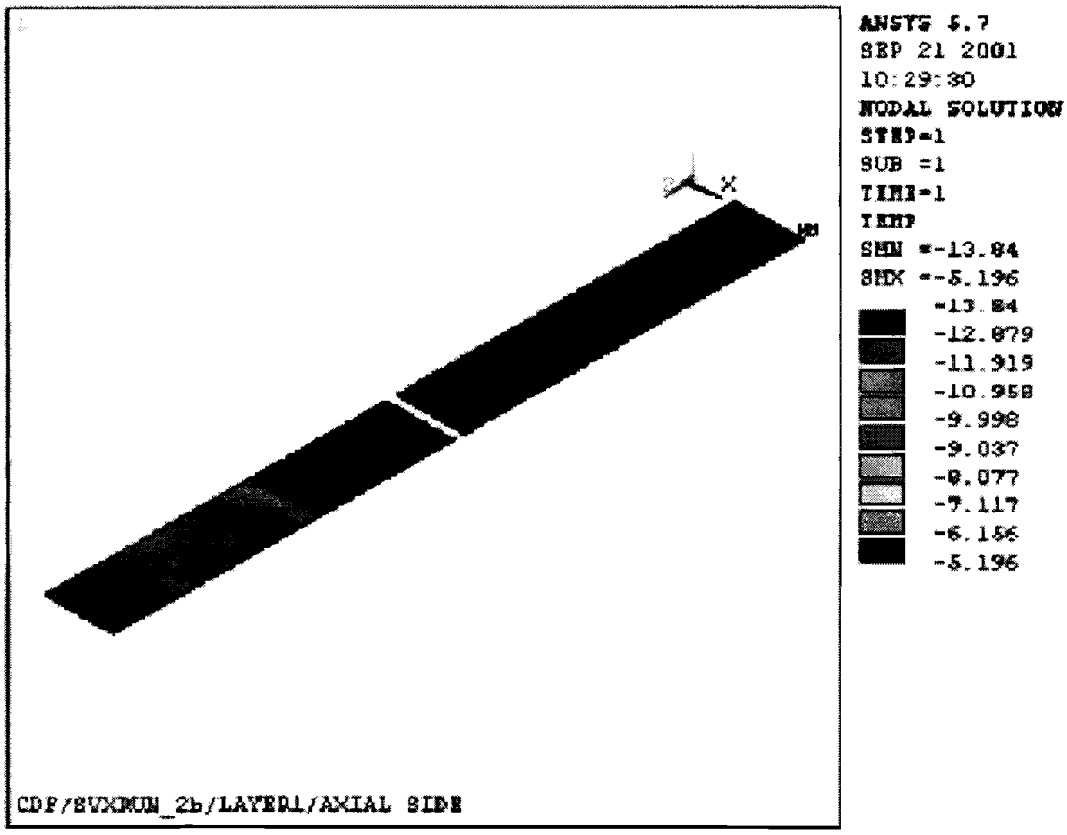

The average silicon temperature, based on average subsection temperatures spread over each colored section, is about –10.9°C.

Figure 5C – L1 Axial CF Skin Temperature Distribution

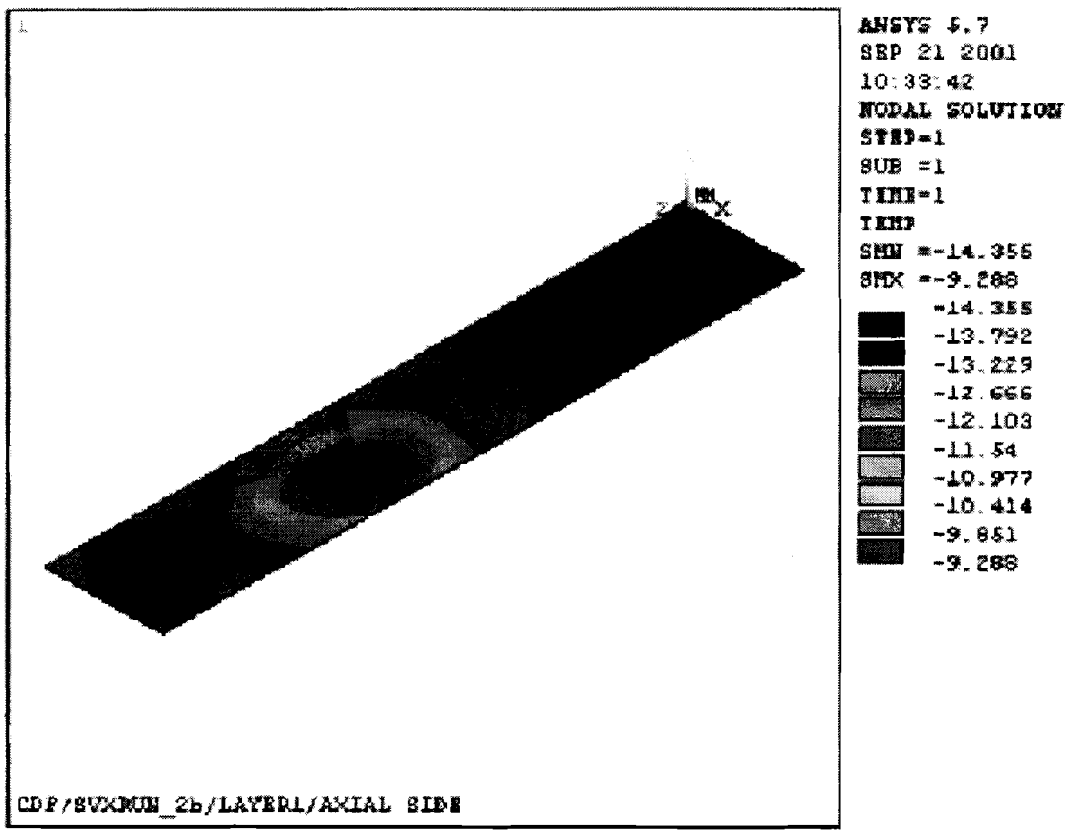

Figure 6A – L1 Stereo Hybrid Temperature Distribution

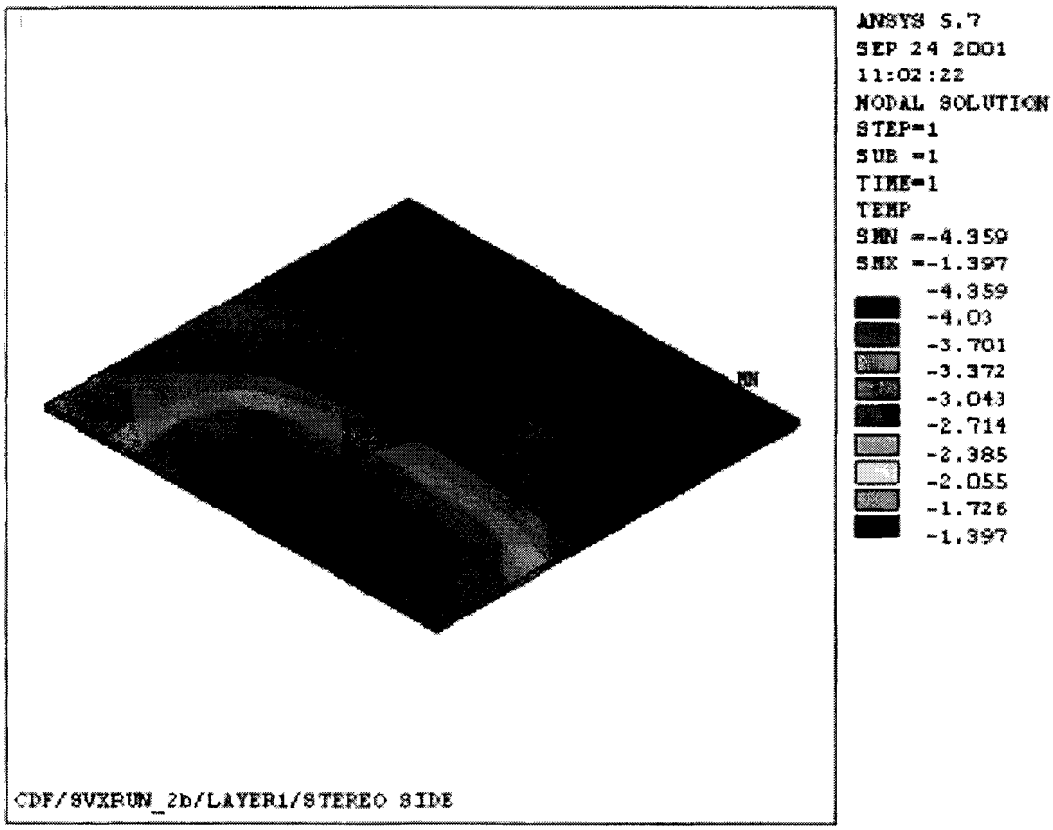

Figure 6B – L1 Stereo Sensor Temperature Distribution

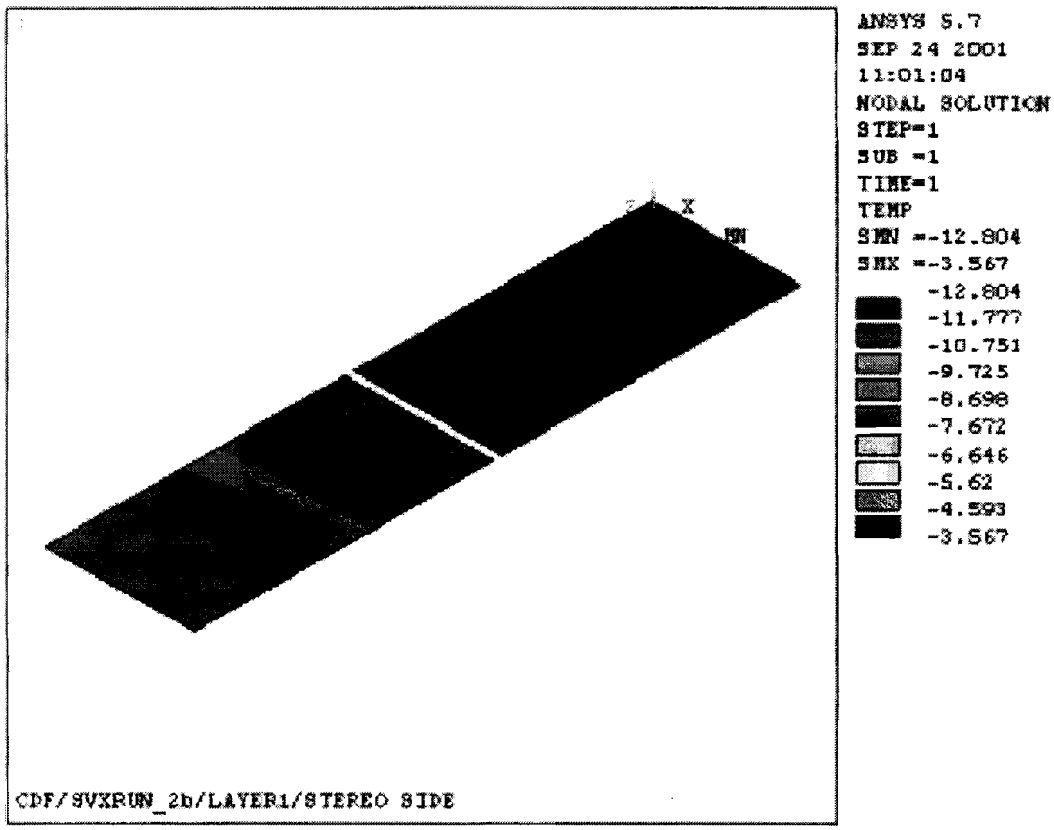

The average silicon temperature, based on average subsection temperatures spread over each colored section, is about –9.6°C.

Figure 6C – L1 Stereo CF Skin Temperature Distribution

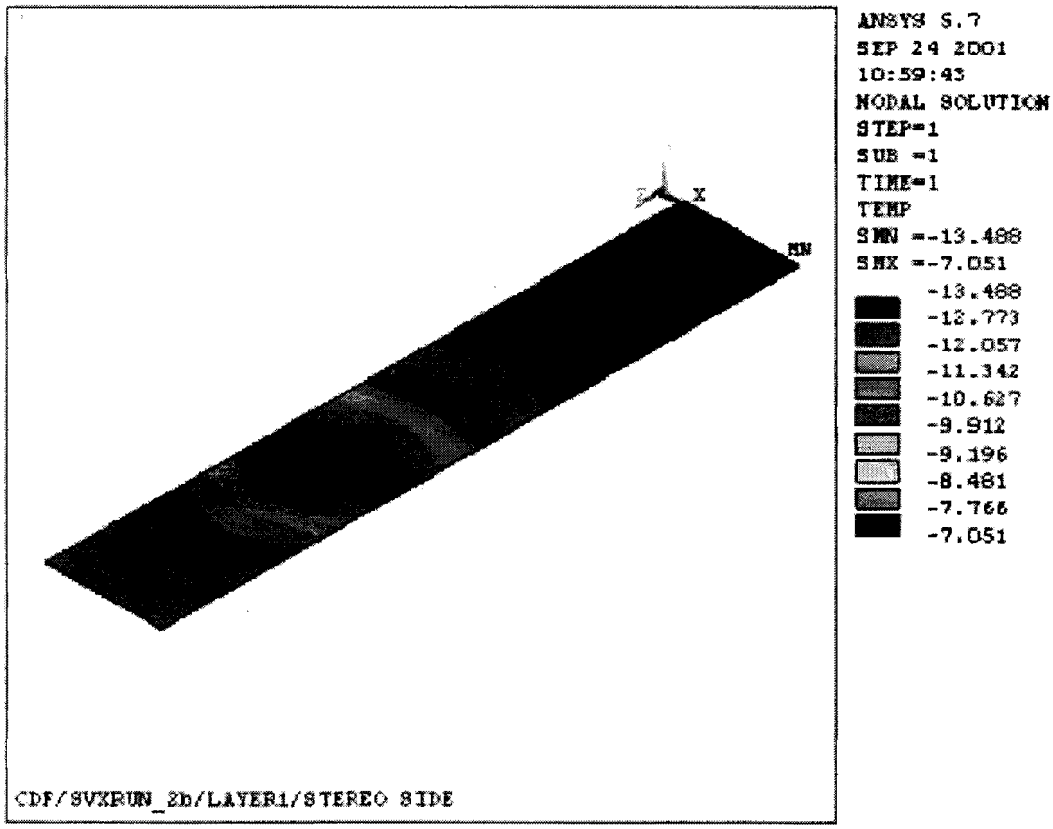

3.0 CONCLUSIONS

The plumbing study shows that the Run 2B heat load is very similar to that for SVXII and that less total flowrate is needed due to a larger allowable $T_{out} - T_{in}$. Colder coolant temperatures are required in order to meet the low maximum allowable temperature requirements for the inner layers – use of 42.5% ethylene glycol in water supplied at -15°C has been assumed. With such a system, it appears feasible to daisy-chain together two ladders and still maintain an acceptable fluid temperature rise with a 4.5 psi detector pressure drop, thus reducing the total number of inlets and outlets. Preliminary discussions have taken place with Rich Stanek of FNAL, who will be investigating chiller load and pumping capabilities with these revised conditions [9].

Sensor temperature requirements for the outer layers (2 through 6) are easily satisfied since they share the coolant system with a portion of the detector (layers 0 and 1) that must be operated at much lower temperatures. Both maximum and average sensor temperatures are well below the +10 and +15 °C specifications.

The maximum temperature found in the layer 1 axial sensor was very close to the given specification. But as discussed with Nicola Bacchetta on 25 Sep 2001 [10], the specification really refers to the average temperature rather than the peak. The –10.9°C estimated average temperature is below the limit value. Although coolant temperatures is some locations may be several degrees warmer than assumed here, conservatisms in the model, such as higher-than expected chip heat and leakage current and thinner-than-expected silicon, would provide significant counterbalance to this effect.

The peak temperature in the layer 1 90° sensors exceeds that specified in Table 1. In the sensor with the on-board hybrid, less than 50% of the sensor volume exceeds the -5°C value, but the remainder is colder, with a significant portion near -10°C. The other sensor in a readout module, which does have a hybrid on it, operates much colder (at or below about -10°C). . The –9.6°C estimated average temperature is below the limit value. Although coolant temperatures is some locations may be several degrees warmer than assumed here, conservatisms in the model, such as higher-than expected chip heat and leakage current and thinner-than-expected silicon, would provide significant counterbalance to this effect.

Due to the evolving nature of the detector, especially with regard to layer 1, the temperature analysis should be reevaluated as the design progresses. The plumbing system evaluation, along with the selection of coolant concentration and supply temperature, should be reevaluated as the design of the inner detector (L0 + L1) progresses and as actual plumbing test data becomes available.

4.0 REFERENCES

1. Email from Nicola Bacchetta (bacchetta@fnal.gov) on 24 Aug 2001.
2. 1997 ASHRAE Fundamentals Handbook, pp 20.5 – 20.7.
3. Rohsenow, W.M., Hartnett., J.P., & Cho., Y.I., Handbook of Heat Transfer, Third Edition, McGraw Hill, 1998.
4. Email from Maurice Garcia-Sciveres (mgs@lbl.gov) on 10 Aug 2001.
5. Leakage current predictions by Nicola Bacchetta at the Run 2B workshop on 7 May 2001.
6. Information provided by Joe Incandella & Nicola Bacchetta.
7. Computer Code, "Engineering Equation Solver (EES) Version 6.234," by F-Chart Software.
8. CDF Note CDF/DOC/Tracking/Public/4473, "Characterization of a SVX II Bulkhead," Steve Blusk et. al., 6 Feb 1998.
9. Email from Rich Stanek (rstanek@fnal.gov) on 6 Sep 2001.
10. Conversation with Nicola Bacchetta (bacchetta@fnal.gov) on 25 Sep 2001.

APPENDIX 1

Detector Configuration

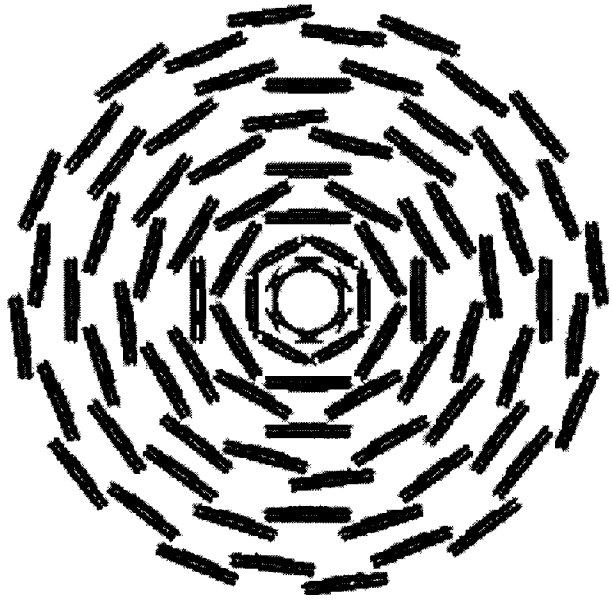

APPENDIX 2

Ladder Views

Layer 2 - 6 Ladder

Layer 1 Ladder

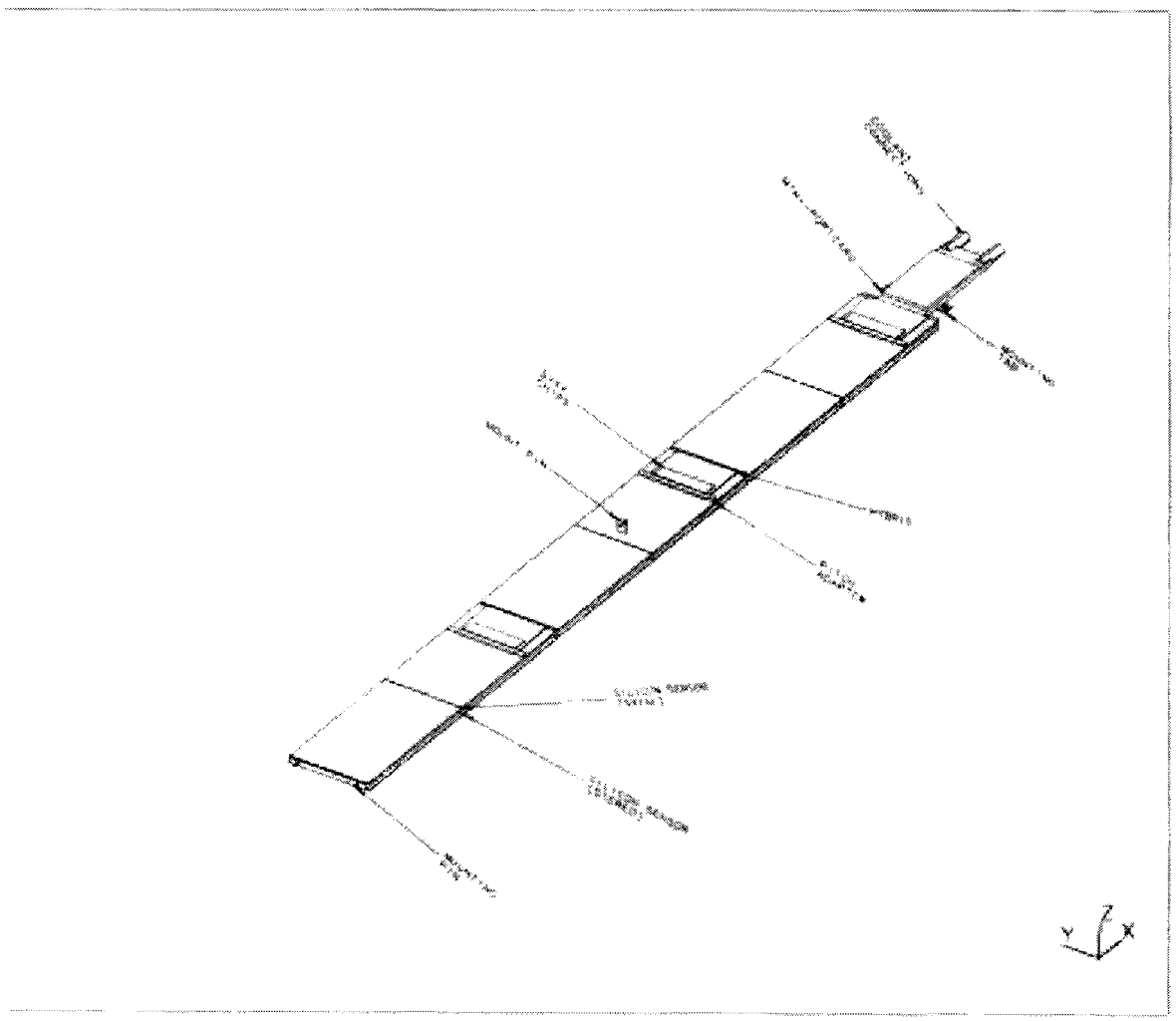

APPENDIX 3

Sample EES Code Listing for Plumbing Calc

```
{ ======================= Flow Study of Pressure Drop & Heat Transfer in L1 through L6 Stave Tubing
========================= }

function F_step(X, X_step, Y1, Y2)                    {Toggle flag for flow regeime & etc}
  if (X < X_step) then F_step := Y1 else F_step := Y2
end


function table533(x,a)   {Curve fit of Nu_m(H1) data in Rohsenow Table 5.33, "Local and Mean Nusselt Numbers in the Thermal
Entrance Region of Rectangular Ducts with the (H1) Boundary Condition". Assume edge value for extrapolation off parameter space}
  if (a > 0.25) then
    if ((1/x) < 200) then
      table533 := 6.647 + 0.05203*(1/x) - 0.0001208*(1/x)^2 - 5.809*(a) + 3.161*(a)^2 + 0.002562*(a/x)
    else
      table533 := 6.647 + 0.05203*(200) - 0.0001208*(200)^2 - 5.809*(a) + 3.161*(a)^2 + 0.002562*(a * 200)
    endif
  else
    if ((1/x) < 200) then
      table533 := 6.647 + 0.05203*(1/x) - 0.0001208*(1/x)^2 - 5.809*(0.25) + 3.161*(0.25)^2 + 0.002562*(0.25/x)
    else
      table533 := 6.647 + 0.05203*(200) - 0.0001208*(200)^2 - 5.809*(0.25) + 3.161*(0.25)^2 + 0.002562*(0.25 * 200)
    endif
  endif
end


{ ------------------------------- Thermodynamic Calculations ------------------------------------ }

{N_ladder = 1}                          {!Number of ladders chained together}

{!Layer 1 Inputs}
{     L_tube = 0.6 * 2 + 0.02           {Length of tube assumed (m)}
      Q_dot = 13.0 * N_ladder           {Assumed power per ladder (W), made up of 6.0 W SVX4 chips + 1.9 W convection + 3
W miniPC + 2.06 W leakage current}
}
{!Layer 2 through 6 Inputs}
      L_tube = 0.7 * 2 + 0.02           {Length of tube assumed (m)}
      Q_dot = 19.2 * N_ladder           {Assumed power per ladder (W), made up of 9.6 W SVX4 chips + 2.8 W convection + 4
W miniPC + 2.8 W leakage current}


   Q_dot = m_dot * cp * DT              {Energy balance}
   m_dot = rho * (LPM * 0.001 / 60)     {lpm to mass flowrate}


{T_in = -10   ;   fluid$ = 'C:\Applications\ees32\Userlib\Custom\Water_EGlycol_30.LKT'      {!30% EG in Water}}
T_in = -15   ;   fluid$ = 'C:\Applications\ees32\Userlib\Custom\Water_EGlycol_42.LKT'      {!42.5% EG in Water}
{T_in = -15   ;   fluid$ = 'C:\Applications\ees32\Userlib\Custom\Dynalene_HC20.LKT'        {!Dynalene HC-20}}

{DP_tot = 4.5}

  T_avg = T_in + 0.5 * DT
  rho = interpolate(fluid$, 'Temp', 'Density', Temp = T_avg)              {kg/m^3}
  mu = 0.001 * interpolate(fluid$, 'Temp', 'DynVisc', Temp = T_avg)       {N-s/m^2}
  cp = interpolate(fluid$, 'Temp', 'SpecHeat', Temp = T_avg)              {J/kg-K}
  k = interpolate(fluid$, 'Temp', 'Cond', Temp = T_avg)                   {W/m-K}
  Pr = cp * mu / k

{ ---------------------------- Fluid Mechanics Calculations ------------------------------- }

A_tube = 9.423 / 1000^2                          {!Previously-calculated cross-sectional flow area (m^2)}
D_h = 0.002703                                   {!Previously-calculated hydraulic diameter (m)}
```

```
w_tube = 0.005797                                   {!Tube inner width rectangular ratio calc (m)}
h_tube = 0.001676                                   {!Tube inner height rectangular ratio calc (m)}
e_tube = 0.000005 * 0.3048                          {Roughness for drawn rubing (m)}

  m_dot = rho * V * A_tube                          {Mass balance}
  Re = rho * V * D_h / mu
  Re_crit = 2300                                    {Assumed transition Reynols' Number}
  K_bend = 100 * f_FT                               {Guessed Bend L/D}

    f = F_step(Re, Re_crit, f_laminar, f_turbulent)
      f_laminar = 64 / Re
      1 / f_turbulent^0.5 = -2.0 * log10(((e_tube/D_h) / 3.7) + (2.51 / (Re * f_turbulent^0.5)))   {Fox & McDonald Eqn 8.36}
      f_FT = 0.0060585 * exp((ln(e_tube/D_h) + 16.3358)^2 / 75.66595)                              {Fully-turbulent friction factor}

    (DP_ladder * 6895) = 0.5 * rho * V^2 * (f * L_tube / D_h + K_bend)                              {Ladder pressure drop (psi)}

    DP_tot = N_ladder * DP_ladder + (N_ladder - 1) * DP_jumper                                      {Total drop (psi)}

    (DP_jumper * 6895) = 0.5 * rho * V_jumper^2 * (64 / Re_jumper) * (0.15 / D_jumper)              {Daisy-chain jumper drop (psi)}
      D_jumper = 0.172 * 0.0254
      m_dot = rho * V_jumper * (0.25 * pi * D_jumper^2)
      Re_jumper = rho * V_jumper * D_jumper / mu

{ ---------------------------- Heat Transfer Coefficient Calculations ------------------------------- }

{Laminar}
    alphalstar = h_tube / w_tube          {aspect ratio}
    xlstar = (L_tube / 2) / (D_h * Re * Pr)
    Nu_laminar = table533(xlstar, alphalstar) * (0.99458 + 0.91253*(alphalstar) - 0.7751*(alphalstar)^2)  {Fit is ratio of 2-wall to 4-wall
Nu_H1 from Rohsenow Table 5.30}

{Turbulent}
    Nu_turbulent = 0.023 * Re^0.8 * Pr^0.4          {Dittus-Boelter Eqn for fully-developed turbulent flow}


  Nu_bar = F_step(Re, Re_crit, Nu_laminar, Nu_turbulent)
  Nu_bar = h_bar * D_h / k


{
==================================================================================================
=== }
```