Fermilab

Particle Physics Division

Mechanical Department Engineering Note

Number: MD-ENG-161 Date: June 19, 2008

Project:Minerva

Project Internal Reference:

Title: Minerva Access Platform Engineering Note

Author(s): Jim Kilmer

Reviewer(s):

Key Words: Minerva, Access Platform

Abstract/Summary:
This note provides all of the structural calculations for the Minerva Phototube Access Platform.

Applicable Codes:

1. Manual of Steel Construction ,AISC, 9th edition.
2. Engineering Data for Aluminum Structures, the Aluminum Association, 5th Edition, 1986.
3. Formulas of Stress, Strain, and Structural Matrices, Walter Pilkey, John Wiley and Sons, 1994.

Minerva Phototube Access Platform Engineering Note
Jim Kilmer
May 1, 2008

This engineering note covers the mechanical calculation for stresses on the PMT access platform shown on drawing 3938.300-ME-444503 and its associated detail drawings, all of which are attached. The note will be devided into three sections: 1. the aluminum platform itself, 2. the upper deck and support on beam right of the support stand, and 3. the rail support on beam left of the support stand.

1. Aluminum Platform

The aluminum platform has been analyzed using formulas from Case 18 on page 666 of **Formulas of Stress, Strain, and Structural Matrices** by Walter D. Pilkey, John Wiley & Sons, 1994. The support feet are modelled as pinned since the platform rides on Thompson linear ball bearings on rails to allow motion along the beam direction of the detector. It will be used to change PMT boxes and check the cabling. For the purposes of this calculation the load is limited to 1000 pounds on the frame. The aluminum bar grating for the access platform is stock number 6250T54 from McMaster Carr. It has a uniform load rating of 387 lbs/ft^2 for a 3 foot span. See the catalog cuts attached. For this frame set the limit lower at 50 lbs/ft^2 to ensure that the frame is not overloaded. Then each aluminum frame is made from Aluminum Association standard channel 4 inches deep and with a .190 inch web. For this channel the properties are

$A := 1.982 \cdot in^2$ $\quad d := 4 \cdot in$ $\quad b := 2.25 \cdot in$ $\quad t_w := 0.19 \cdot in$

$I_{xx} := 5.21 \cdot in^4$ $\quad S_{xx} := 2.60 \cdot in^3$ $\quad I_{yy} := 1.02 \cdot in^4$ $\quad S_{yy} := 0.69 \cdot in^3$

This data all comes from the Aluminum Association's **Engineering data for aluminum structures**, Fifth edition, 1986.

Using the case above and dimensions from the drawings the following are given:

$L := 183.818 \cdot in - 4 \cdot in$

$a := 67.25 \cdot in$ $\quad b := 42.75 \cdot in$ $\quad c := 72.5 \cdot in$

$d := 35 \cdot in$ $\quad e := 85 \cdot in$ $\quad h := 110 \cdot in$

$P_1 := \frac{500 \cdot lb}{d}$ Load on one frame of the platform

$I1 := I_{xx}$ $\quad I2 := I_{xx}$ $\quad I3 := I_{xx}$ All parts of the frame are 4 inch channel.

$S1 := S_{xx}$ $\quad S2 := S_{xx}$ $\quad S3 := S_{xx}$

Start by calculating the factors at the top of the page.

$k_1 := \frac{I3 \cdot a}{I1 \cdot e}$ $\qquad$ $k_2 := \frac{I3 \cdot d}{I2 \cdot e}$

$k_1 = 0.791$ $\qquad$ $k_2 = 0.412$

$B_o := 2 \cdot \frac{a}{h} \cdot (k_1 + 1) + 1$ $\qquad$ $C_o := \frac{a}{h} + 2 + 3 \cdot k_2$

$B_o = 3.19$ $\qquad$ $C_o = 3.847$

$N_o := \frac{a \cdot B_o}{h} + C_o$ $\qquad$ $X := \frac{P_1 \cdot d \cdot c \cdot C_o + .5 \cdot P_1 \cdot d^2 \cdot k_2}{2 \cdot N_o}$

$N_o = 5.797$ $\qquad$ $X = 1.234 \times 10^4 \, in \cdot lb$

$H_A := \frac{X}{h}$

$H_A = 112.162 \, lb$

This force is the transverse resisting force on the bottom pin connections. H_A equals H_B.

$R_A := \frac{1}{2} \cdot P_1 \cdot d$

$R_A = 250 \, lb$

This is the vertical reaction force which is therefore the load carried by the Thompson linear bearing

The platform itself is calculated at 435 pounds so use 500 pounds as the number for the rest of this calculation for the bearings.

$F_{vert} := 250 \cdot lb + 500 \cdot \frac{lb}{4}$

$F_{vert} = 375 \, lb$

The forces make a combined force as follows:

$F_{comb} := \sqrt{F_{vert}^2 + H_A^2}$

$F_{comb} = 391.415 \, lb$

The combined force is applied at an angle to the bearing.

$$\theta_{force} := \operatorname{atan}\left(\frac{391.5 \cdot lb}{112.62 \cdot lb}\right) \cdot 57.3$$

$\theta_{force} = 73.957$ This is the angle of the force on the bearing and rail

The pillow block bearings used for the access platform are for a 1.5 inch diameter rail. They have a maximum dynamic load capacity of 3880 pounds for a rated travel life of 2 million inches. Since this access platform will be used only occassionally and never at a high speed this load rating is acceptable. One more thing, the polar K_o correction factor, must be considered. For this angle of force the correction factor from the graph is 0.85 and the maximum load must be derated to 3298 pounds. These linear bearings are recycled and their previous history is unknown. However, there is from the above calculations a safety factor of 8 in the load to load rating and these bearings will be OK for this use. See the attached pages from the Thompson catalogue.

Now continue to calculate the Moments on the frame using Case 18 formulas.

$$M_E := \frac{1}{2} \cdot P_1 \cdot d \cdot c - X$$

$M_E = 5.787 \times 10^3 \, in \cdot lb$ $M_E = M_D$

$$M_F := \frac{a}{h} \cdot X$$

$M_F = 7.543 \times 10^3 \, in \cdot lb$ $M_F = M_C$

$$M_K := \frac{1}{8} \cdot P_1 \cdot d^2 + M_E$$

$M_K = 7.975 \times 10^3 \, in \cdot lb$

Notice that in all of these moment calculations the maximum moment is at the connection of the member with the next member in the frame. First take the largest moment in the area just to the side of the connection using only the member Moment of inertia.

$$\sigma_K := \frac{M_K}{S_{xx}}$$

$$\sigma_K = 3.067 \times 10^3 \, \frac{lb}{in^2}$$

$$\sigma_F := \frac{M_F}{S_{xx}}$$

$$\sigma_F = 2.901 \times 10^3 \frac{lb}{in^2}$$

$$\sigma_E := \frac{M_E}{S_{xx}}$$

$$\sigma_E = 2.226 \times 10^3 \frac{lb}{in^2}$$

From Table 2, page 11 of Engineering Data for Aluminum Structures the minimum tensile strength of 6061-T6 is 35 KSI. Use a safety factor of 3 and limit stresses in the structure to less than 11.67KSI. Then all of these bending stresses are less than the limit and all are OK for the bulk of the members. This includes the largest stress in the frame σ_K which is at the center of the horizontal member.

The next largest stress is at the weld joint (F or C) which is temper zero because of the heat affected zone. For the heat affected zone the stress limit at 1/3 of yield is only 2,667 psi. The stress calculated above for corner F does not take into account the extra moment of inertia because right at the corner at the maximum moment the channel is cut at an angle and the depth of the channel there is 4.66 inches instead of 4 inches. Calculate a new moment of inertia for that section.

Model it as three rectangular shaped pieces and ignore the inner radius. Use the nomenclature shown on page 31 of **Engineering data for aluminum structures**. Then this section would have the following data:

$d := 4.66 \cdot in$ $\quad b := 2.25 \cdot in$ $\quad t_f := .29 \cdot in$ $\quad t_w := .19 \cdot in$

Break the channel into three pieces where the web is I_1 and the flanges are I_2. Use the central axis in the XX direction as the ceter of the channel.

For the web:

$$I_1 := \frac{1}{12} \cdot t_w \cdot \left(4.66 \cdot in - 2 \cdot t_f\right)^3$$

$$I_1 = 1.075\, in^4$$

For the flanges:

$A_f := b \cdot t_f$ $\qquad$ $I_f := \frac{1}{12} \cdot b \cdot t_f^3$

The displacement from the central axis to the flange centroid is

$d_f := \frac{4.66 \cdot in}{2} - \frac{t_f}{2}$ $\qquad$ $d_f = 2.185\ in$

$I_2 := I_f + A_f \cdot d_f^2$

$I_{xx} := I_1 + 2 \cdot I_2$

$I_{xx} = 7.315\ in^4$

Now calculate the stress on corner F.

$\sigma_F := \frac{M_F \cdot \left(\frac{d}{2}\right)}{I_{xx}}$

$\sigma_F = 2.403 \times 10^3 \frac{lb}{in^2}$

Since this stress is less than the allowable of 2,667 psi for T0 temper the joint is OK. Never the less all of the joints in this frame are reinforced with a steel plate as shown on the drawings.

The frame also should be checked for a side load in the directions across the neutrino beam as well as along it. For the acroos beam direction use Case 19 from Pilkey.

For the load across use 100 pounds, but as a point load. Note that for the entire structure this is a force of 200 pounds, which is the equivalent of 0.4 G.

$W := 100 \cdot lb$

$X := \frac{W \cdot a \cdot \left(B_o + C_o\right)}{2 \cdot N_o}$

$H_B := \frac{X}{h}$ $\qquad$ $H_A := W - H_B$

$H_B = 37.106\,lb$ $\qquad$ $H_A = 62.894\,lb$

$R_A := \frac{W \cdot a}{L}$ $\qquad$ $R_B := R_A$

$R_A = 37.399\,lb$

Check the linear bearings again.

$P_A := \sqrt{(37.4 \cdot lb - 125 \cdot lb)^2 + (62.9 \cdot lb)^2}$

$P_A = 107.843\,lb$

Use 125 lbs down as the weight of the frame itself and aiding R_A here.

$P_B := \sqrt{(37.4 \cdot lb + 125 \cdot lb)^2 + (37.1 \cdot lb)^2}$

$P_B = 166.584\,lb$

$\alpha_A := \operatorname{atan}\left(\frac{R_A - 125 \cdot lb}{H_A}\right) \cdot 57.3$ $\qquad$ $\alpha_B := \operatorname{atan}\left(\frac{R_B + 125 \cdot lb}{H_B}\right) \cdot 57.3$

$\alpha_A = -54.327$ $\qquad$ $\alpha_B = 77.135$

At these angles the bearings are fine with a load rating very nearly the full 3880 lb load capability, well beyond that required here.

Now find the moments.

$M_F := W \cdot a - \frac{a \cdot X}{L}$ $\qquad$ $M_C := \frac{a \cdot X}{h}$

$M_F = 5.199 \times 10^3\,in \cdot lb$ $\qquad$ $M_C = 2.495 \times 10^3\,in \cdot lb$

$M_E := \left(1 - \frac{c}{L}\right) \cdot W \cdot a - X$ $\qquad$ $M_D := \frac{c}{L} \cdot W \cdot a - X$

$M_E = -68.058\,in \cdot lb$ $\qquad$ $M_D = -1.37 \times 10^3\,in \cdot lb$

For connections F and C first look at the stress in the area just before the heat affected zone.

$$\sigma_F := \frac{M_F}{S_{xx}} \qquad \sigma_C := \frac{M_C}{S_{xx}}$$

$$\sigma_F = 1.999 \times 10^3 \frac{lb}{in^2} \qquad \sigma_C = 959.755 \frac{lb}{in^2}$$

Both are less than the allowable of 11.67 Ksi so these stresses are OK. Next check in the heat affected zone using the larger I calculated right at the weld joint.

$$\sigma_{Fweld} := \frac{M_F \cdot \frac{d}{2}}{I_{xx}} \qquad \sigma_{Cweld} := \frac{M_C \cdot \frac{d}{2}}{I_{xx}}$$

$$\sigma_{Fweld} = 1.656 \times 10^3 \frac{lb}{in^2} \qquad \sigma_{Cweld} = 794.847 \frac{lb}{in^2}$$

These stresses in the heat affected zone are OK for the allowable of 2,667 psi.

Finally for the aluminum frame look at a force that tries to push on the top of the frame in the direction of the neutrino beam. The force tries to pull up on one set of the linear bearings.

Find the load on the bearings from this force. Sum the moments.

$$F_{bearing} := \frac{500 \cdot lb \cdot h}{2 \cdot 36 \cdot in}$$

The factor of two in the equation is because the force is shared with two bearings.

$$F_{bearing} = 763.889\ lb$$

Note that this is an UPWARD force on the open bearing. From the bearing polar graph estimate the K_o factor as 0.25 at 270 degrees direction. Then the upper limit on the bearing load is 0.25 times 3880 pounds or 970 pounds which is greater than the required 764 pounds and the bearing is OK.

2. West Side Support Rail

The west side rail support is shown on drawing 3938.300-ME-444503 in detail B. The rails is supported by a W6 by12 wide flange beam. For this calculation assume that the Thompson rail assembly does not contribute to the strength of the beam system.

The vertical load that causes a bending moment is calculated above as 375 lbs maximum per linear bearing. The maximum load in any span would then be 750 lbs. Spans are 5 feet long. For the beam page 2-73 of the AISC code gives an allowable load for laterally supported W6 by 12 of 23 kips. Since there is no other load on the beam these beams are safe not only on the west side but on both sides of the detector rails. Use page 2-311 of the code to calculate stresses. Assume that the loading is a single point load on each and every span instead of only one to match the case where n=4.

$P := 1000 \cdot lb$ Load on each span greater than 750 lbs

$L := 60 \cdot in$ length of each span

$M_2 := 0.375 \cdot P \cdot L$ Maximum moment called out for the case

$S := 7.31 \cdot in^3$ S for a W6 by 12 I beam

$$\sigma := \frac{M_2}{S}$$

$$\sigma = 3.078 \times 10^3 \frac{lb}{in^2}$$

This is well below the allowable for an A36 beam of 23.8 ksi so the beam is safe.

Check the bracket holding the rail up. It is called out in drawing 3938.300-MC-444625. Assume that the downward force on the bracket is 2000 pounds which is more than twice the load from the platform on the rails (see P above). Sum the moments taken about the lower corner of the bracket. Note that there is an array of six bolts (part number 21 on ME-444503). Define a function that sums the moments.

$$T := \frac{2000 \cdot lb \cdot 5.275 \cdot in}{2 \cdot (1.685 \cdot in + 6.31 \cdot in + 10.935 \cdot in)}$$

$T = 278.658\ lb$ This is the equal tension on each of the six bolts.

From Table 1-A on page 4-3 of the AISC code an A307 bolt has an allowable load shown of 3.1 kips, which is much larger than 278 lbs. Next calculate shear.

$$\sigma_{boltshear} := \frac{2000 \cdot lb}{6 \cdot .3068 \cdot in^2}$$

$\sigma_{boltshear} = 1.086 \times 10^3 \frac{lb}{in^2}$

From page 4-5 the shear allowable stress is 17% of the ultimate. Using table 1-D for an A307 bolt the allowable is

$F_u := 10000 \frac{lb}{in^2}$

$F_v := F_u \cdot 0.17$

$F_v = 1.7 \times 10^3 \frac{lb}{in^2}$

Therefore A307 bolts are OK for this application.

Look at the bracket structure itself. For this assume that the gusset is only a bar 1" by .5" wide centered undeer the load and extending down 12" to near the bottom bolt. This bar would be in compression.

$l := \sqrt{(5.275 \cdot in)^2 + (12 \cdot in)^2}$

$l = 13.108\, in$ Length of the bar

Find the compression load.

$P := 2000 \cdot lb \cdot \left(\frac{13.1 \cdot in}{12 \cdot in}\right)$

$P = 2.183 \times 10^3\, lb$ Compression load on the bar.

Find the allowable stress from the AISC code.

$I := \frac{1}{12} \cdot 1 \cdot in \cdot (.5 \cdot in)^3$

$A := 1 \cdot in \cdot .5 \cdot in$

$r := \sqrt{\frac{I}{A}}$ $r = 0.144\, in$

$\frac{l}{r} = 90.816$

From table C-36, page 3-16 the allowable is

$F_a := 14200 \cdot \frac{lb}{in^2}$

$f_a := \frac{P}{A}$

$$f_a = 4.367 \times 10^3 \frac{lb}{in^2}$$

Since fa is less that Fa the gusset is OK for this load. Next look at the welds at the sides of the gusset that are in shear.

$$t_w := \frac{.5 \cdot in}{\sqrt{2}}$$ This is the throat distance of the weld

$$A_w := t_w \cdot (13.12 \cdot in - .5 \cdot in) \cdot 2$$

$$\sigma_w := \frac{P}{A_w}$$

$$\sigma_w = 244.667 \frac{lb}{in^2}$$

This weld stress is OK.. Last, look at the weld holding part number 23 to the column on drawing number ME-444503. It is also two full welds down the sides of the plate that are 1/2" welds. For shear those stesses calculated just above are nearly correct and fine. The welds must also resist a moment. For that assume that only the top one inch of weld resists the entire moment.

$$M_{weld} := 2000 \cdot lb \cdot 5.275 \cdot in$$

Now assume that the moment acts from the bottom corner of the plate number 23. Then the tensile force on that 1" of weld is

$$F_t := \frac{M_{weld}}{13.12 \cdot in}$$

$$F_t = 804.116\ lb$$

The area of the resisting weld is

$$A_{wt} := t_w \cdot 1 \cdot in \cdot 2$$ Welds on each side of the plate

$$\sigma_{wt} := \frac{F_t}{A_{wt}}$$

$$\sigma_{wt} = 1.137 \times 10^3 \frac{lb}{in^2}$$

This weld stress is fine for welds using E70XX rod.

3. East Side Support Structure

On the east side the structure supports the rail and all of the rail calculations are the same. The structure supports a walkway which must also be examined. Limit the walkway load to 50 pounds per square foot. Then each large bracket (part number 4 of drawing ME-444503) must support a 4 foot by 5 foot area or a 1000 pound load. The bar grating is 2" high by 3/16" wide by 1 3/16" spacing. It is grating that was used somewhere else in the past and is now being recycled. The closest size in McMaster Carr is smaller at 1.5" high with the same thickness and spacing (Stock number 6250T83). That grating is capable of 208 lbs/ft^2 at a 5 foot span. This grating is strong enough for our application. To analyze this system use case number 24 on page 2-304 and case 28 on page 2-305 of the AISC code and sum the cases. Ignore the small knee brace in the center of the beam.

$w := \frac{1000 \cdot lb}{46.65 \cdot in}$ Decking uniform load on beam.

$P := 1000 \cdot lb$ Rail point load on the beam.

Case 24 Uniform load of the deck

$l := 40.25 \cdot in$

$a := 6.5 \cdot in$

$R_{1u} := \frac{w}{2 \cdot l} \cdot \left(l^2 - a^2\right)$

$R_{1u} = 420.153\, lb$

$R_{2u} := \frac{w}{2 \cdot l} \cdot (l + a)^2$

$R_{2u} = 581.99\, lb$

$x := \frac{l}{2} \cdot \left(1 - \frac{a^2}{l^2}\right)$

$x = 19.6\, in$

$Mmax := \frac{w}{8 \cdot l^2} \cdot (l + a)^2 \cdot (l - a)^2$ Moment at x=19.6 inches

$Mmax = 4.118 \times 10^3\, in \cdot lb$

$M_{pl} := \frac{w \cdot 9.77 \cdot in}{2 \cdot l} \cdot \left(l^2 - a^2 - 9.77 \cdot in \cdot l\right)$

$M_{pl} = 3.082 \times 10^3\, in \cdot lb$ Moment at the place of the point load.

Case 28 Point load of the rail

$a := 9.77 \cdot in$

$b := l - a$

$R_{1p} := \frac{P \cdot b}{l}$

$R_{1p} = 757.267\ lb$

$R_{2p} := \frac{P \cdot a}{l}$

$R_{2p} = 242.733\ lb$

$M := \frac{P \cdot a \cdot b}{l}$

$M = 7.398 \times 10^{3}\ in \cdot lb$

Sum totals of maximum reactions and moments for both cases.

$R_1 := R_{1u} + R_{1p}$

$R_1 = 1.177 \times 10^{3}\ lb$ Total reaction on the column connection

$R_2 := R_{2u} + R_{2p}$

$R_2 = 824.723\ lb$ Total reactionon the gusset connection

$M_{total} := M + Mmax$

$M_{total} = 1.152 \times 10^{4}\ in \cdot lb$ Maximum moment at the point load position

This beam (Center Beam Weldment, part number MC-444435) is made from a 4" by 4" by 5/16" square tube with the following properties:

$A_{tube} := 4.36 \cdot in^{2}$ $I := 9.58 \cdot in^{4}$ $S := 4.79 \cdot in^{3}$ $r := 1.48 \cdot in$

$\sigma_{beam} := \frac{M_{total}}{S}$

$\sigma_{beam} = 2.404 \times 10^{3}\ \frac{lb}{in^{2}}$

This bending stress is much less than the allowable for square structural tubing so the beam is OK.

The R1 reaction is the shear force at the column for the weld, the bolts and the welds on the column connection plate.

Weld on the beam to plate

$t_w := \frac{.3125 \cdot in}{\sqrt{2}}$ Weld throat

$l_w := 4 \cdot 4 \cdot in$ Weld is 5/16" and all around the tube

$A_w := t_w \cdot l_w$

$\sigma_w := \frac{R_1}{A_w}$

$\sigma_w = 333.025 \frac{lb}{in^2}$

This weld stress is fine for welds done with E70XX rod.

The bolts used to connect the beam to the column are 5/8" - 11UNC and the plate has four bolts (part number 13 on ME-444503). These bolts are subject to the same R1 reaction in shear or 1177 pounds in shear. From table 1-D on page 4-5 the allowable load in shear for an A307 bolt is 3.1 kips so the bolts are OK.

Next use drawing MC-444362 to get dimensions for the gusset (Lower Support Weldment).

$d_x := 50 \cdot in - 5 \cdot in$ Horizontal distance from the column to R2

$d_y := 51.75 \cdot in - 7 \cdot in$ Vertical distance from R2 position to the gusset base

$L_g := \sqrt{d_x^2 + d_y^2}$

$L_g = 63.463\, in$ Length of the gusset

$F_{ver} := R_2$ The vertical gusset force is equal to R2

$F_{hor} := R_2 \cdot \frac{d_y}{d_x}$

$F_{hor} = 820.141\, lb$ This force is also the tension component on the bolts

Since the four A307 bolts share the load equally each bolt sees 205 lbs. By table 1-A on page 4-3 these bolts have an allowable tension load of 6.1 kips per bolt and they are fine.

For the welds the tension force is the same. First lok at the weld around the tube. Use the same information calculated about the weld just above.

$$\sigma_{wten} := \frac{F_{hor}}{A_w}$$ Aw is the area of the weld calculated above.

$$\sigma_{wten} = 231.971 \frac{lb}{in^2}$$

This weld on the tube is very low and OK. Next find the tensile stress in the tube itself.

$$\sigma_{tubeten} := \frac{F_{hor}}{A_{tube}}$$

$$\sigma_{tubeten} = 188.106 \frac{lb}{in^2}$$ Tensile stress on the horizontal beam tube is OK.

Compression in the lower support weldment:

$$F_{bracecomp} := F_{vert} \cdot \frac{L_g}{d_y}$$

$$F_{bracecomp} = 1.17 \times 10^3 \, lb$$

$$\sigma_{bracecomp} := \frac{F_{bracecomp}}{A_{tube}}$$

$$\sigma_{bracecomp} = 268.256 \frac{lb}{in^2}$$

This compressive stress on the tube is no problem at all so the brace is OK. The shear force on the bolt connection at the bottom of the brace is equivalent to the vertical force at the other end of the brace so it is 825 lbs. Since that load is equivalent to the similar plate connection at the end of the upper support beam above it those welds and bolts see the same stresses and are also fine.

Phone: 1-800-554-8466
Website: www.thomsonballbushing.com

Precision Steel Ball Bushing Bearing Pillow Block

(Open Type) For Continously Supported Applications

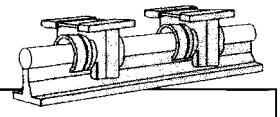

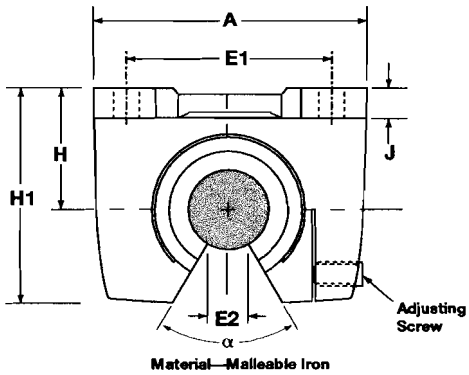

Material—Malleable Iron

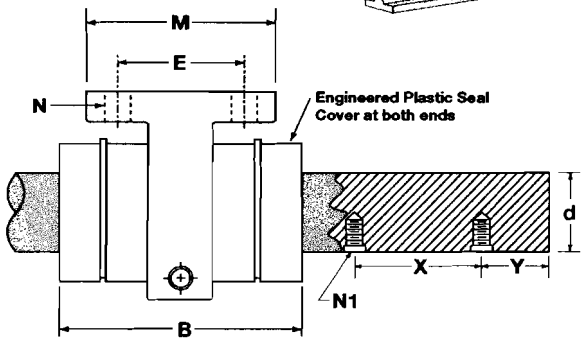

Sizes .500 thru 1.00 available in Corrosion Resistant Stainless Steel

Part Number [3] Precision Steel Ball Bushing Pillow Block	60 Case LinearRace	Nominal Diameter	H ±.005	H1	60 Case LinearRace Minimum Depth of Hardness	60 Case Solid LinearRace Mass lb/in	60 Case LinearRace Mounting Holes X	Y	N1
PBO-8-OPN	1/2 L CTL	.500	.875	1.50	.04	.06	4	2	#6-32
PBO-12-OPN	3/4 L CTL	.750	1.125	2.00	.06	.13	6	3	#10-32
PBO-16-OPN	1 L CTL	1.000	1.375	2.38	.08	.22	6	3	1/4-20
PBO-20-OPN	1 1/4 L CTL	1.250	1.750	3.06	.08	.35	6	3	5/16-18
PBO-24-OPN	1 1/2 L CTL	1.500	2.000	3.50	.08	.50	8	4	3/8-16
PBO-32-OPN	2 L CTL	2.000	2.500	4.50	.10	.89	8	4	1/2-13

Part Number [3] Precision Steel Ball Bushing Pillow Block	60 Case LinearRace Diameter d	A	B	E ±.010	E1 ±.010	E2 min.	J	α deg	M	N Hole	N Bolt	Pillow Block Weight lb	Dynamic[1] Load Capacity lb_f
PBO-8-OPN	.4995/.4990	2.00	1.69	1.000	1.500	.37	.25	50	1.50	.19	#8	.4	60
PBO-12-OPN	.7495/.7490	2.75	2.06	1.375	2.000	.43	.31	60	2.00	.22	#10	1.0	140
PBO-16-OPN	.9995/.9990	3.25	2.88	1.500	2.500	.56	.38	60	2.25	.28	1/4	1.8	240
PBO-20-OPN	1.2495/1.2490	4.00	3.63	1.875	3.000	.67	.44	50	2.75	.34	5/16	3.8	400
PBO-24-OPN	1.4994/1.4989	4.75	4.00	2.000	3.500	.81	.50	50	3.00	.34	5/16	4.8	600
PBO-32-OPN	1.9994/1.9987	6.00	5.00	2.500	4.500	1.00	.63	50	3.50	.41	3/8	8.5	860

Load/Life Graph (Lines indicate limiting load for given Ball Bushing bearing pillow block)

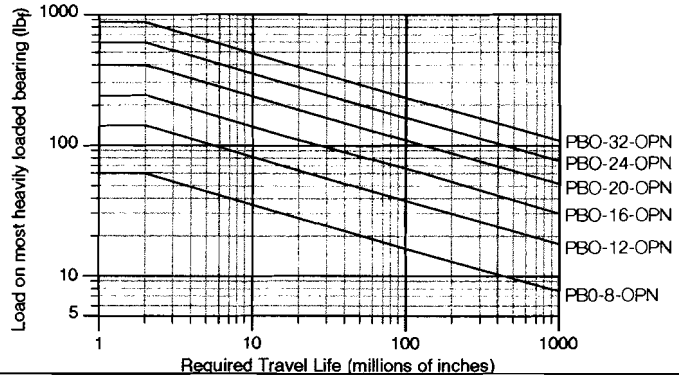

Determining Ball Bushing Bearing Size

To determine the proper Ball Bushing bearing size enter the chart with the maximum load of the most heavily loaded bearing and the required travel life. Mark where the two lines intersect. All Ball Bushing bearing sizes that pass through or above and to the right of this point may be suitable for this application.

Note: For the purpose of using this chart.

Load on most heavily loaded bearing = maximum applied load/K_o.

Where K_o can be determined from the Polar Graph to the right.

©2003 Danaher Motion. Printed in the U.S.A. The specifications in this publication are believed to be accurate and reliable. However, it is the responsibility of the product user to determine the suitability of Thomson products for a specific application. While defective products will be replaced without charge if promptly returned, no liability is assumed beyond such replacement.

THOMSON™

* Trademark of Danaher Motion. DANAHER MOTION is registered in the U.S. Patent and Trademark Office and in other countries.

60 Case LinearRace Support Rails and Assemblies
for Continuously Supported Applications

Type SR and SR-PD 60 Case LinearRace Support Rails and Assemblies

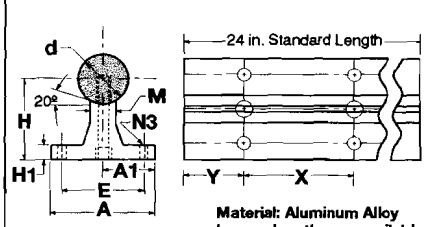

Material: Aluminum Alloy
Longer lengths are available

SR Without Holes	SR-PD With Predrilled Holes	Assy. With Solid LinearRace	Nom. LinearRace Dia. d	H ±.002	H1	A	A1 ±.002	E	M	N3 Hole	N3 Bolt	LinearRace Mounting Bolt N1	X	Y	SR Mass lb/ft
SR-8	SR-8-PD	SRA-8	.500	1.125	.19	1.50	.750	1.00	.25	.17	#6	#6-32 x .88	4	2	.60
SR-12	SR-12-PD	SRA-12	.750	1.500	.25	1.75	.875	1.25	.38	.22	#10	10-32 x 1.25	6	3	1.00
SR-16	SR-16-PD	SRA-16	1.000	1.750	.25	2.13	1.063	1.50	.50	.28	1/4	1/4-20 x 1.50	6	3	1.40
SR-20	SR-20-PD	SRA-20	1.250	2.125	.31	2.50	1.250	1.88	.56	.34	5/16	5/16-18 x 1.75	6	3	2.10
SR-24	SR-24-PD	SRA-24	1.500	2.500	.38	3.00	1.500	2.25	.69	.34	5/16	3/8-16 x 2.00	8	4	2.60
SR-32	SR-32-PD	SRA-32	2.000	3.250	.50	3.75	1.875	2.75	.88	.41	3/8	1/2-13 x 2.50	8	4	4.20

(1) The Dynamic Load Capacity is based on a rated travel life of 2 million inches. The actual Dynamic Load Capacity can be affected by the orientation of the bearing or the direction of the applied load. For dynamic load correction factors see polar graphs below.

(2) For the maximum length of all 60 Case* LinearRace* Support Rail Assemblies without 60 Case LinearRace Joints see maximum length table on page 89. 60 Case LinearRace Support Rail Assemblies are available with 60 Case LinearRace joints for unlimited travel lengths.

(3) For part number description and specifications see page 88 and 89.

Note: Precision Steel Ball Bushing* bearings are available in corrosion resistant stainless steel in diameters up to 1 inch. Dynamic load ratings are reduced by 30% when using stainless steel Ball Bushing bearings. See Engineering Support Appendix page 136. For additional technical data, see Engineering Support Appendix.

Standard Without Holes	Standard With Predrilled Holes	Assembly With Solid 60 case LinearRace	Standard Single Piece Length(2) in	Maximum Single Piece Length(2) in
SR	SR-PD	SRA	24	72

Polar Graphs

The actual Dynamic Load Capacity of a Ball Bushing bearing is determined by the orientation of the bearing or direction of the applied load. The load Correction Factor K_o is found by knowing the direction of the applied load relative to the orientation of the bearings ball tracks and referring to the polar graph. To determine the actual Dynamic Load Capacity, multiply the proper correction factor by the Dynamic Load Capacity listed in the product table on the previous page.

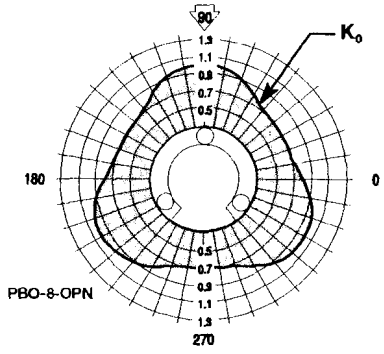

PBO-8-OPN

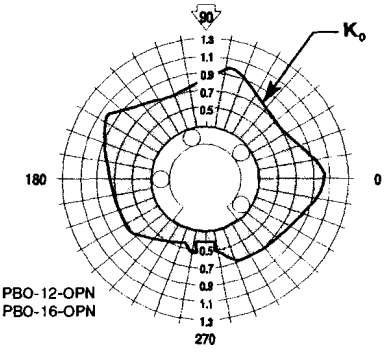

PBO-12-OPN
PBO-16-OPN

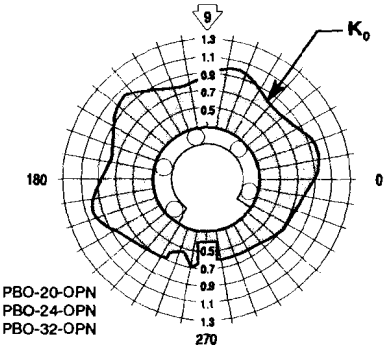

PBO-20-OPN
PBO-24-OPN
PBO-32-OPN

©2003 Danaher Motion. Printed in the U.S.A. The specifications in this publication are believed to be accurate and reliable. However, it is the responsibility of the product user to determine the suitability of Thomson products for a specific application. While defective products will be replaced without charge if promptly returned, no liability is assumed beyond such replacement.

* Trademark of Danaher Motion. DANAHER MOTION is registered in the U.S. Patent and Trademark Office and in other countries.

Additional Information: *For additional load ratings and deflection for the steel and aluminum bar grating on this page, go to our web site, www.mcmaster.com, and search for* **6849TAC**, *or fax us at 630-782-3800 and request* **6849TAC**.

Steel and Aluminum Bar Grating

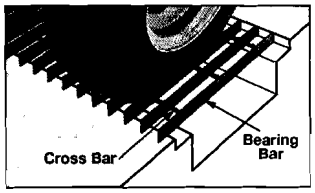

High Load Bearing Steel, Smooth

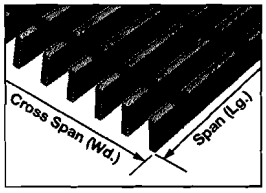

Lightweight Aluminum, Serrated

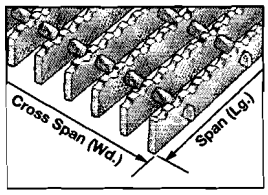

Able to support heavier loads than plank grating, this bar grating is for use on trenches, mezzanines, walkways, work platforms, and floors. It has an open design that allows air, light, and debris to flow through. Cross bars are spaced 4" apart center to center. Choose grating with a serrated surface for better traction.

Uniform load rating is the maximum evenly distributed load that the grating can support (lbs. per square foot) for a given unsupported span (Lg.). Bearing bars provide uniform weight distribution. Cross bars hold the bearing bars in place. **To Order:** Please specify span (Lg.) from those listed.

High Load Bearing Steel

This is our strongest bar grating. The cross bars are made of twisted steel for added traction (unless noted).

Black painted steel bar grating is great for dry, noncorrosive areas. For indoor use only.

Galvanized steel bar grating is corrosion resistant. For indoor and outdoor use.

To Order: For custom sizes, please specify cross span (Wd.) up to 3 ft. (in 1 3/16" increments for smooth and serrated grating; 15/16" increments for smooth grating with closer bearing bars) and span (Lg.) up to 24 ft. *Note:* Grating with spans less than 17" have higher prices because they include banding parallel to the cross bars for added strength.

Bearing Bar Ht.	Bearing Bar Wd.	Bearing Bar Spacing, Ctr.-to-Ctr.	Uniform Load Rating, lbs./sq. ft. for 3-ft. Span (Lg.)	Available in 2-, 3-, 4-, 6-, 8-, and 10-ft. Spans (Lg.): 1-Ft. Cross Span (Wd.)	Per Ft.	2-Ft. Cross Span (Wd.)	Per Ft.	3-Ft. Cross Span (Wd.)	Per Ft.	Custom Cross Spans (Wd.) and Spans (Lg.)	Per Sq. Ft.
Smooth Black Painted Steel											
3/4"	1/8"	1 3/16"	158	6849T34	$11.26	6849T43	$22.07	6849T46	$33.16	6849T11	$13.51
1"	1/8"	1 3/16"	281	6849T35	11.61	6849T36	23.21	6849T47	34.81	6849T13	13.93
1"	3/16"	1 3/16"	421	6849T87	15.25	6849T52	30.56	6849T81	44.31	6849T14	18.30
1"	1/4"	1 3/16"	624	6857T19★	20.33	6857T22★	40.66	6857T23★	61.00	6857T31★	24.40
1 1/4"	3/16"	1 3/16"	658	6849T22	14.30	6849T54	28.64	6849T97	42.96	6849T16	17.16
1 1/2"	3/16"	1 3/16"	947	6849T24	16.59	6849T39	33.19	6849T98	49.78	6849T18	19.91
1 1/2"	1/4"	1 3/16"	1404	6857T27★	24.10	6857T52★	43.60	6857T24★	65.39	6857T33★	28.92
Smooth Black Painted Steel with Closer Bearing Bars											
1"	3/16"	15/16"	533	6849T57	18.56	6849T66	37.12	6849T74	55.68	6849T63	24.64
1 1/4"	3/16"	15/16"	833	6849T58	21.42	6849T681	42.85	6849T76	64.27	6849T65	25.71
1 1/2"	3/16"	15/16"	1200	6849T59	23.62	6849T691	47.34	6849T78	88.95	6849T67	28.28
Serrated Black Painted Steel											
1"	1/8"	1 3/16"	216	6867T13	12.82	6867T36	22.30	6867T49	33.44	6867T11	15.38
1"	3/16"	1 3/16"	324	6867T17	15.54	6867T38	31.06	6867T51	46.59	6867T12	18.65
1 1/4"	3/16"	1 3/16"	533	6867T18	18.88	6867T39	33.96	6867T52	50.94	6867T14	22.66
1 1/2"	3/16"	1 3/16"	795	6867T19	19.66	6867T43	39.31	6867T53	58.97	6867T15	23.59
Smooth Galvanized Steel											
3/4"	1/8"	1 3/16"	158	6849T361	12.08	6849T373	24.15	6849T384	36.23	6849T23	14.50
1"	1/8"	1 3/16"	281	6849T362	13.17	6849T374	26.33	6849T385	39.49	6849T25	15.80
1"	3/16"	1 3/16"	421	6849T363	16.51	6849T375	33.03	6849T386	49.54	6849T26	19.81
1"	1/4"	1 3/16"	624	6857T121★	24.16	6857T125★	48.33	6857T129★	61.05	6857T41★	28.99
1 1/4"	3/16"	1 3/16"	658	6849T364	16.81	6849T376	33.62	6849T387	50.42	6849T28	20.17
1 1/2"	3/16"	1 3/16"	947	6849T365	19.64	6849T377	39.28	6849T388	58.93	6849T31	23.56
1 1/2"	1/4"	1 3/16"	1404	6857T122★	26.70	6857T126★	53.40	6857T131★	80.10	6857T43★	32.04
Smooth Galvanized Steel with Closer Bearing Bars											
1"	3/16"	15/16"	533	6849T441	22.46	6849T447	44.93	6849T454	67.39	6849T75	25.90
1 1/4"	3/16"	15/16"	833	6849T442	25.44	6849T448	50.88	6849T455	76.31	6849T77	29.24
1 1/2"	3/16"	15/16"	1200	6849T443	29.19	6849T449	58.38	6849T456	87.58	6849T79	33.56
Serrated Galvanized Steel											
1"	1/8"	1 3/16"	216	6867T58	13.47	6867T67	26.92	6867T76	40.38	6867T21	16.16
1"	3/16"	1 3/16"	324	6867T59	18.00	6867T68	36.01	6867T77	54.02	6867T22	21.60
1 1/4"	3/16"	1 3/16"	533	6867T61	19.91	6867T69	39.80	6867T78	59.70	6867T24	23.89
1 1/2"	3/16"	1 3/16"	795	6867T62	22.78	6867T71	45.56	6867T79	68.35	6867T25	27.34

★ Cross bars are made of rounded steel bar.

Lightweight Aluminum

Lightweight and rustproof, this grating is also nonmagnetic and nonsparking. For indoor and outdoor use.

To Order: For custom sizes, please specify cross span (Wd.) in 1 3/16" increments up to 4 ft. (unless noted) and span (Lg.) up to 20 ft.

Bearing Bar Ht.	Bearing Bar Wd.	Bearing Bar Spacing, Ctr.-to-Ctr.	Uniform Load Rating, lbs./sq. ft. for 3-ft. Span (Lg.)	Available in 2-, 3-, 4-, 8-, and 10-ft. Spans (Lg.): 2-Ft. Cross Span (Wd.)	Per Ft.	3-Ft. Cross Span (Wd.)	Per Ft.	4-Ft. Cross Span (Wd.)	Per Ft.	Custom Cross Spans (Wd.) and Spans (Lg.)	Per Sq. Ft.
Smooth											
1"	1/8"	1 3/16"	204	6498T17	$19.83	6498T37	$29.67	—	—	6498T21■	$23.80
1"	3/16"	1 3/16"	306	6498T18	24.49	6498T38	36.65	6498T52	$48.98	6498T22	29.39
1 1/4"	1/8"	1 3/16"	319	6498T19	25.98	6498T39	34.64	—	—	6498T23■	31.18
1 1/4"	3/16"	1 3/16"	478	6498T27	28.67	6498T41	42.83	6498T54	57.17	6498T24	34.40
1 1/2"	1/8"	1 3/16"	458	6498T28	23.16	6498T42	30.82	—	—	6498T25■	27.79
1 1/2"	3/16"	1 3/16"	688	6498T29	32.32	6498T43	43.15	6498T56	64.47	6498T26	38.78
Serrated											
1"	1/8"	1 3/16"	156	6250T51	22.33	6250T64	33.16	—	—	6250T16■	26.80
1"	3/16"	1 3/16"	234	6250T52	26.82	6250T65	35.82	6250T78	44.32	6250T11	32.18
1 1/4"	1/8"	1 3/16"	258	6250T53	25.17	6250T66	33.50	—	—	6250T12■	30.20
1 1/4"	3/16"	1 3/16"	387	6250T54	30.99	6250T67	41.33	6250T81	61.99	6250T13	37.19
1 1/2"	1/8"	1 3/16"	385	6250T55	27.50	6250T68	41.33	—	—	6250T14■	33.00
1 1/2"	3/16"	1 3/16"	578	6250T56	34.66	6250T69	46.16	6250T83	73.32	6250T15	41.59

■ Maximum cross span (Wd.) is 3 ft.

More About Steel and Aluminum Bar Grating—Load and Deflection Table (Cont.)

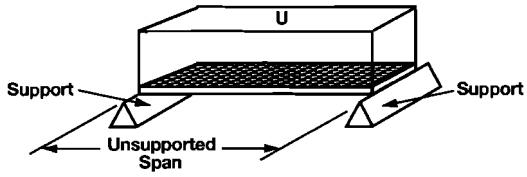

Uniform Load

(U)—Uniform load (lbs./sq. ft.). *(UD)*—Uniform load deflection.
Unsupported Span—The distance between your supports.

Lightweight Aluminum (Continued)									
					Unsupported Span				
		Height	**Width**		***2 ft.***	***3 ft.***	***4 ft.***	***5 ft.***	***6 ft.***
Serrated Surface	**6250T51, T64, T16**	1″	1/8″	(U)	351	156	88	—	—
				(UD)	0.164″	0.370″	0.660″	—	—
	6250T52, T65, T78, T11	1″	3/16″	(U)	526	234	132	—	—
				(UD)	0.164″	0.370″	0.660″	—	—
	6250T53, T66, T12	1 1/4″	1/8″	(U)	580	258	145	93	—
				(UD)	0.128″	0.288″	0.512″	0.802″	—
	6250T54, T67, T81, T13	1 1/4″	3/16″	(U)	872	387	218	139	—
				(UD)	0.128″	0.288″	0.513″	0.800″	—
	6250T55, T68, T14	1 1/2″	1/8″	(U)	867	385	217	139	96
				(UD)	0.105″	0.236″	0.420″	0.656″	0.940″
	6250T56, T69, T83, T15	1 1/2″	3/16″	(U)	1300	578	325	208	144
				(UD)	0.105″	0.236″	0.419″	0.655″	0.940″

Copyright © 2007 McMaster-Carr Supply Company. All rights reserved.

REV	DESCRIPTION	DRAWN	DATE
		APPROVED	DATE

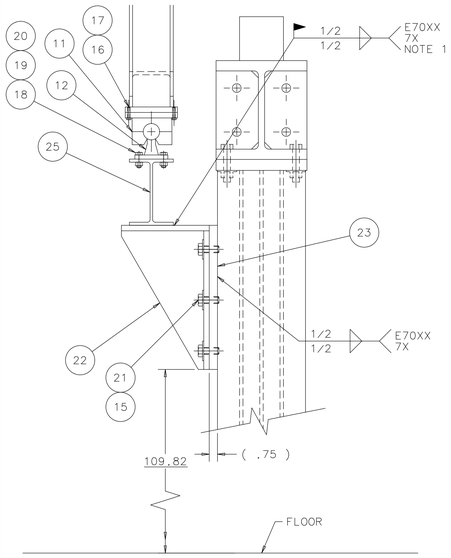

DETAIL B
SCALE: 3:16

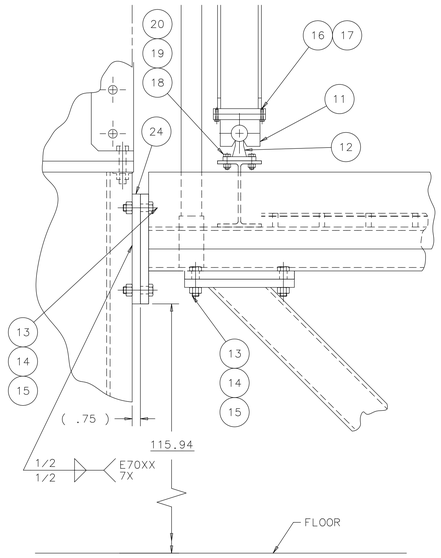

DETAIL A
SCALE: 3:16

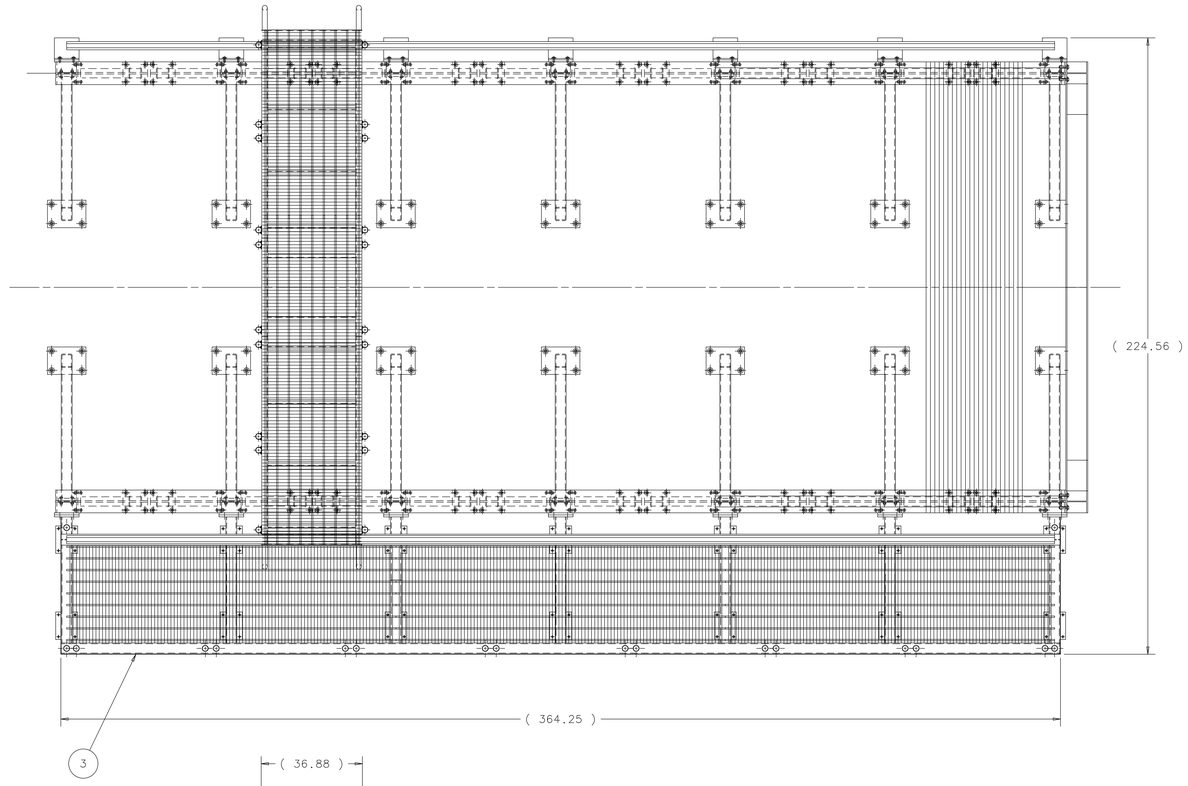

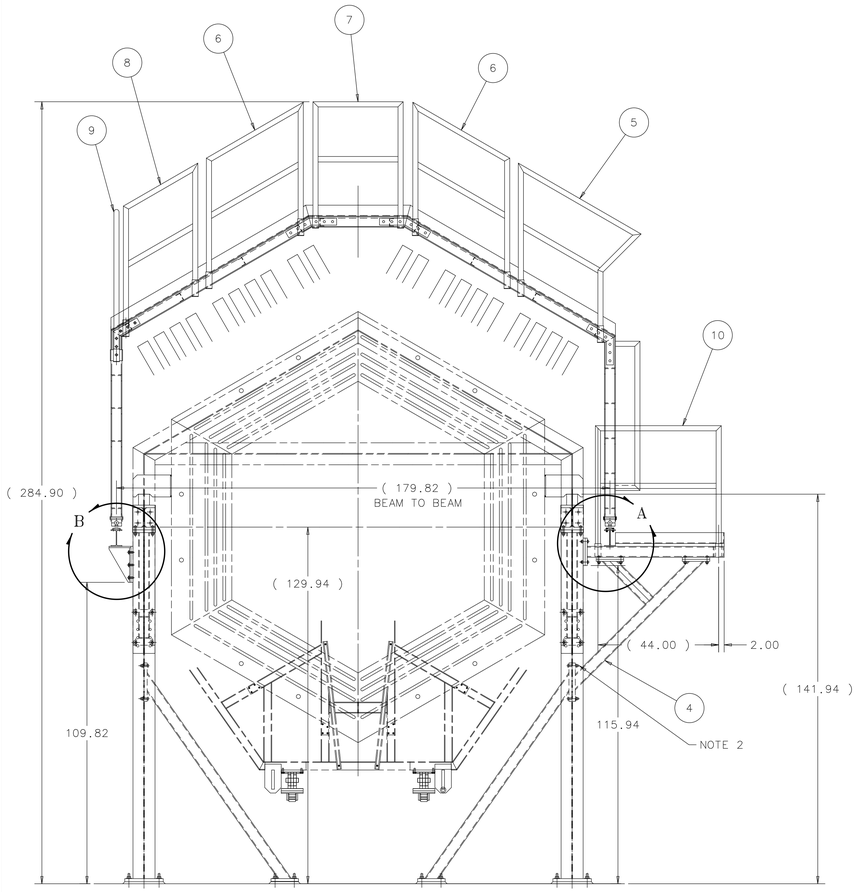

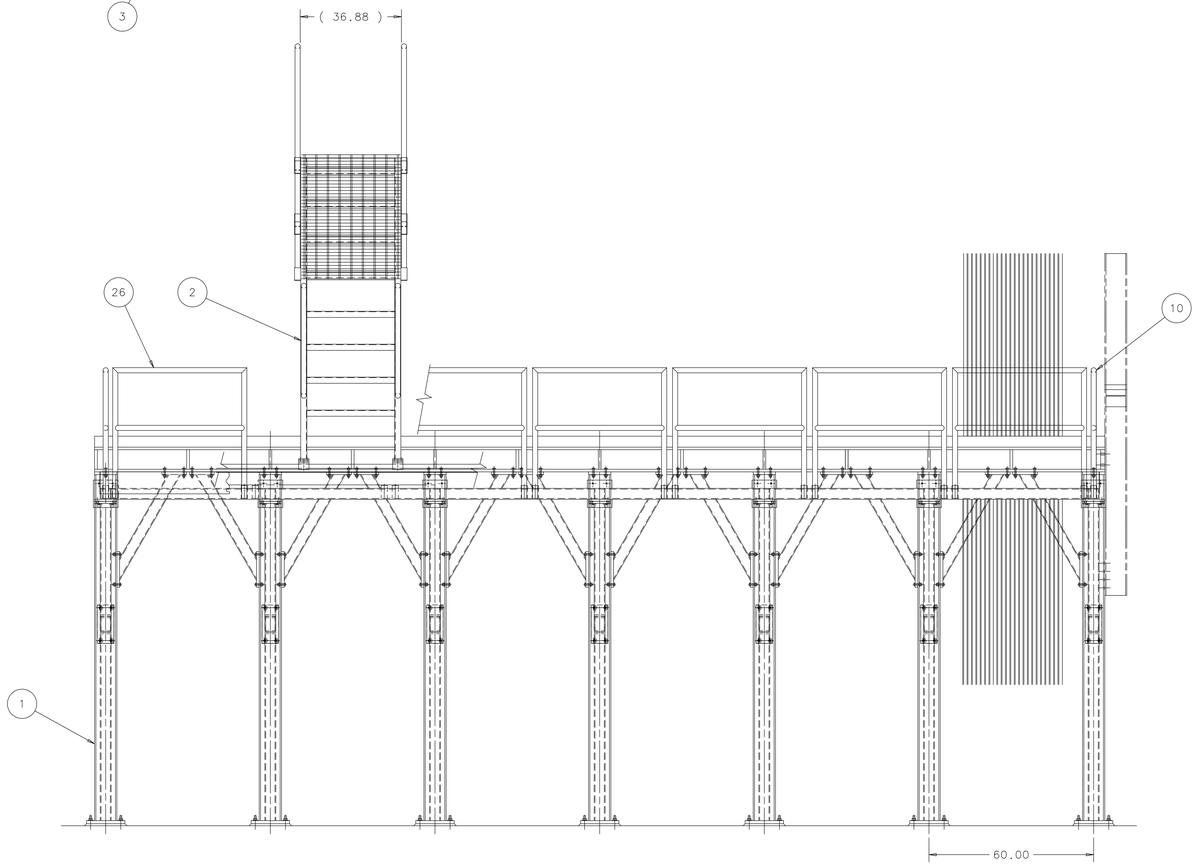

NOTES:

1. ITEM #25 TO BE LEVELED AND ALIGNED WITH BEAM ON OPPOSITE SIDE BEFORE WELDING.
2. REPLACE 5/8-11 X 2.50 LG. BOLT WITH 5/8-11 X 3.50 LG. BOLT WHEN ADDING PLATFORM TO EXISTING FRAME.

ITEM	PART NO.	DESCRIPTION OR SIZE	QTY.
26	MC-444665	FRONT RAIL WELDMENT	7
25	MD-444508	PLATFORM SHAFT SUPPORT BEAM	1
24	MB-444628	LADDER BRACKET MOUNT RIGHT	7
23	MB-444626	LADDER MOUNT BRACKET FACE PLATE	7
22	MC-444625	LADDER MOUNTING BRACKET WELD	7
21	COML	HEX HD. SCREW-5/8-11 UNC-2A X 1.50 LG. STEEL	42
20	COML	FLAT WASHER - 5/16 SCREW SIZE	180
19	COML	HEX NUT - 5/16-18 UNC-2B STEEL	180
18	COML	HEX HD. SCREW-5/16-18 UNC-2A X 2.50 LG. STEEL	180
17	COML	FLAT WASHER - 1/4 SCREW SIZE	16
16	COML	HEX HD. SCREW-1/4-20 UNC-2A X 1.00 LG. STEEL	16
15	COML	FLAT WASHER - 5/8 SCREW SIZE	126
14	COML	HEX NUT - 5/8-11 UNC-2B STEEL	84
13	COML	HEX HD. SCREW-5/8-11 UNC-2A X 2.50 LG. STEEL	84
12	SR-32-PD	THOMSON SHAFT SUPPORT RAIL TYPE SR-PD (ø1 1/2 SHAFT)X 24.00 LG.	30
11	SPB-24-OPN	THOMPSON-OPEN PILLOW BLOCKS 1 1/2 SHAFT	4
10	MC-444365	SIDE RAIL WELDMENT	2
9	MC-444527	LADDER RAILING WELDMENT 5	1
8	MC-444502	LADDER RAILING WELDMENT 4	2
7	MC-444501	LADDER RAILING WELDMENT 3	2
6	MC-444500	LADDER RAILING WELDMENT 2	2
5	MC-444499	LADDER RAILING WELDMENT 1	2
4	MC-444362	LOWER SUPPORT WELDMENT	7
3	MD-444397	PLATFORM WELDMENT	1
2	ME-444399	LADDER FRAME WELDMENT	1
1	ME-444345	HEAVY BEAM FRAME ASSEMBLY	1

PARTS LIST

UNLESS OTHERWISE SPECIFIED			ORIGINATOR	J.KILMER	24-FEB-2007
.XX	.XXX	ANGLES	DRAWN	G.SMITH	24-FEB-2007
± .03	± ---	± ---	CHECKED	W.CYKO	23-MAY-2007
			APPROVED	J.KILMER	06-JUN-2007

1. BREAK ALL SHARP EDGES .015 MAX.
2. DO NOT SCALE DRAWING.
3. DIMENSIONS BASED UPON ASME Y14.5M-1994
4. MAX. ALL MACH. SURFACES
5. DRAWING UNITS: U.S. INCH

USED ON

MATERIAL
SEE PARTS LIST ABOVE

FERMI NATIONAL ACCELERATOR LABORATORY
UNITED STATES DEPARTMENT OF ENERGY

MINERVA-MECH-PLANE ANALYSIS HEAVY FRAME AND BRIDGE ASSEMBLY

SCALE	DRAWING NUMBER	SHEET	REV
3:64	3938.300-ME-444503	1 OF 1	

CREATED WITH : Ideas12NXSeries GROUP: PPD/MECHANICAL DEPARTMENT

REV	DESCRIPTION	DRAWN	DATE
		APPROVED	DATE

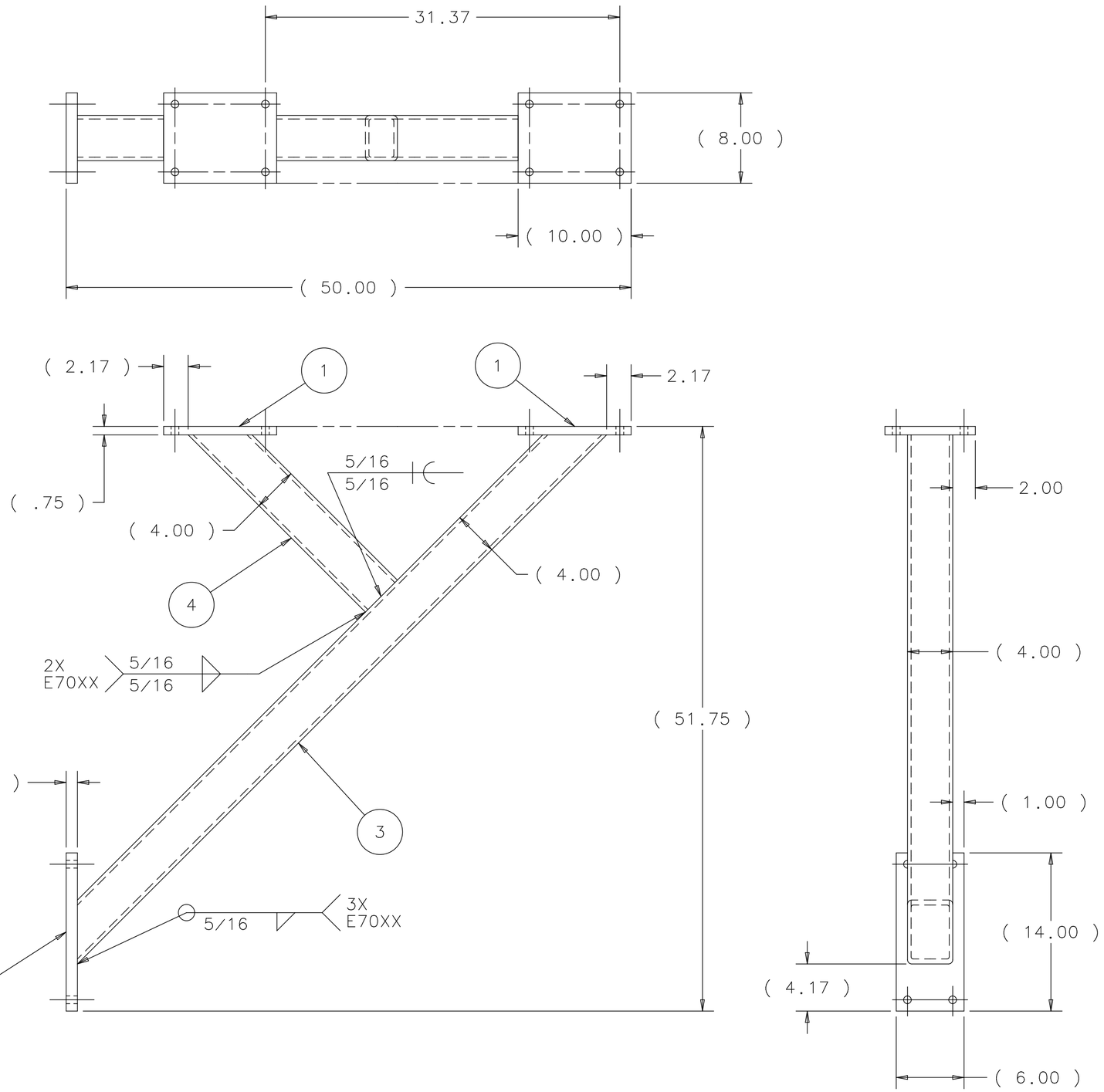

ITEM	PART NO.	DESCRIPTION OR SIZE	QTY.
4	MB-444375	LOWER SUPPORT TUBE SHORT	1
3	MB-444367	LOWER SUPPORT TUBE LONG	1
2	MB-444366	LOWER SUPPORT BOTTOM PLATE	1
1	MB-444364	TOP PLATE	2

PARTS LIST

UNLESS OTHERWISE SPECIFIED					
.XX	.XXX	ANGLES	ORIGINATOR	W.CYKO	08-JAN-2007
± .06	± ---	± ---	DRAWN	G.SMITH	08-JAN-2007
			CHECKED	W.CYKO	23-MAY-2007
			APPROVED	J.KILMER	06-JUN-2007

1. BREAK ALL SHARP EDGES .015 MAX.
2. DO NOT SCALE DRAWING.
3. DIMENSIONS BASED UPON ASME Y14.5M-1994
4. MAX. ALL MACH. SURFACES 250
5. DRAWING UNITS: U.S. INCH

USED ON: ME-444503

MATERIAL: SEE PARTS LIST ABOVE

FERMI NATIONAL ACCELERATOR LABORATORY
UNITED STATES DEPARTMENT OF ENERGY

MINERVA-MECH.-PLANE ANALYSIS HEAVY FRAME AND BRIDGE LOWER SUPPORT WELDMENT

SCALE	DRAWING NUMBER	SHEET	REV
1:8	3938.300-MC-444362	1 OF 1	

CREATED WITH : Ideas12NXSeries GROUP: PPD/MECHANICAL DEPARTMENT

Created: 08:35:16 on 08-06-07 (D-M-Y) By: gsmith State: 1-INITIAL

REV	DESCRIPTION	DRAWN	DATE
		APPROVED	DATE

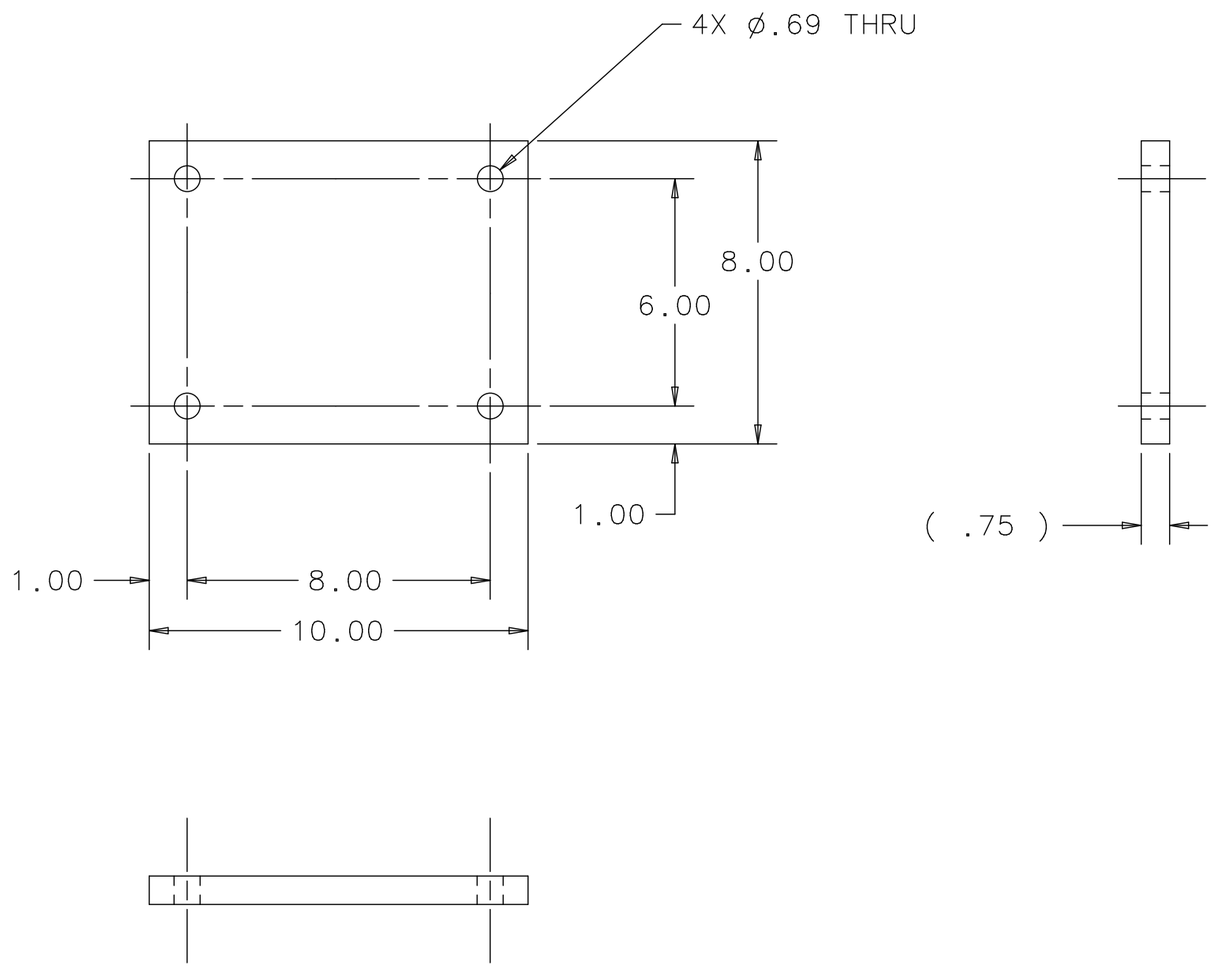

UNLESS OTHERWISE SPECIFIED			ORIGINATOR	W.CYKO	08-JAN-2007
.XX	.XXX	ANGLES	DRAWN	S.KINDELBERGER	08-JAN-2007
± .03	± ---	± ---	CHECKED	W.CYKO	23-MAY-2007
			APPROVED	J.KILMER	06-JUN-2007

1. BREAK ALL SHARP EDGES .015 MAX.
2. DO NOT SCALE DRAWING.
3. DIMENSIONS BASED UPON ASME Y14.5M-1994
4. MAX. ALL MACH. SURFACES 125
5. DRAWING UNITS: U.S. INCH

USED ON
MC-444435 , MC-444447, MC-444362

MATERIAL
PLATE 3/4 THICK
CARBON STEEL A36

FERMI NATIONAL ACCELERATOR LABORATORY
UNITED STATES DEPARTMENT OF ENERGY

MINERVA-MECH.-PLANE ANALYSIS HEAVY FRAME AND BRIDGE TOP PLATE

SCALE	DRAWING NUMBER	SHEET	REV
1:4	3938.300-MB-444364	1 OF 1	

CREATED WITH : Ideas12NXSeries | GROUP: PPD/MECHANICAL DEPARTMENT

Created: 08:50:50 on 07-06-07 (D-M-Y) By: gsmith State: 1-INITIAL

REV	DESCRIPTION	DRAWN	DATE
		APPROVED	DATE

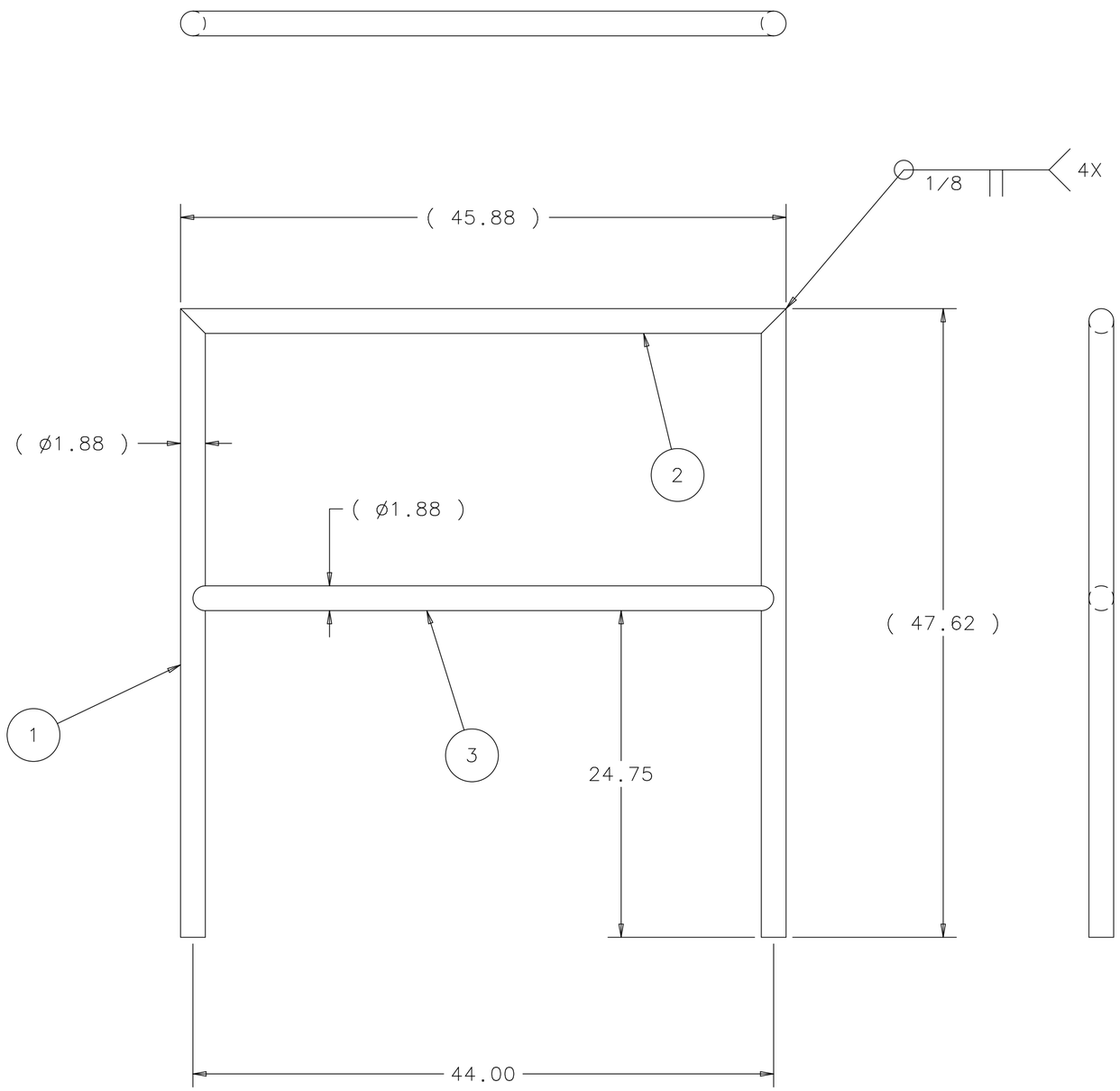

ITEM	PART NO.	DESCRIPTION OR SIZE	QTY.
3	MB-444386	RAIL-LOWER HORIZONTAL PIPE	1
2	MB-444387	RAIL-UPPER HORIZONTAL PIPE	1
1	MB-444379	RAIL-VERTICAL PIPE	2

PARTS LIST

UNLESS OTHERWISE SPECIFIED					
.XX	.XXX	ANGLES	ORIGINATOR	W.CYKO	09-JAN-2007
± .06	± ---	± ---	DRAWN	G.SMITH	09-JAN-2007
			CHECKED	W.CYKO	23-MAY-2007
			APPROVED	J.KILMER	06-JUN-2007

1. BREAK ALL SHARP EDGES .015 MAX.
2. DO NOT SCALE DRAWING.
3. DIMENSIONS BASED UPON ASME Y14.5M-1994
4. MAX. ALL MACH. SURFACES 250
5. DRAWING UNITS: U.S. INCH

USED ON: ME-444503

MATERIAL: SEE PARTS LIST ABOVE

FERMI NATIONAL ACCELERATOR LABORATORY
UNITED STATES DEPARTMENT OF ENERGY

MINERVA-MECH. PLANE ANALYSIS HEAVY FRAME AND BRIDGE SIDE RAIL WELDMENT

SCALE	DRAWING NUMBER	SHEET	REV
1:8	3938.300-MC-444365	1 OF 1	

CREATED WITH : Ideas12NXSeries | GROUP: PPD/MECHANICAL DEPARTMENT

Created: 08:33:34 on 08-06-07 (D-M-Y) By: gsmith State: 1-INITIAL

REV	DESCRIPTION	DRAWN	DATE
		APPROVED	DATE

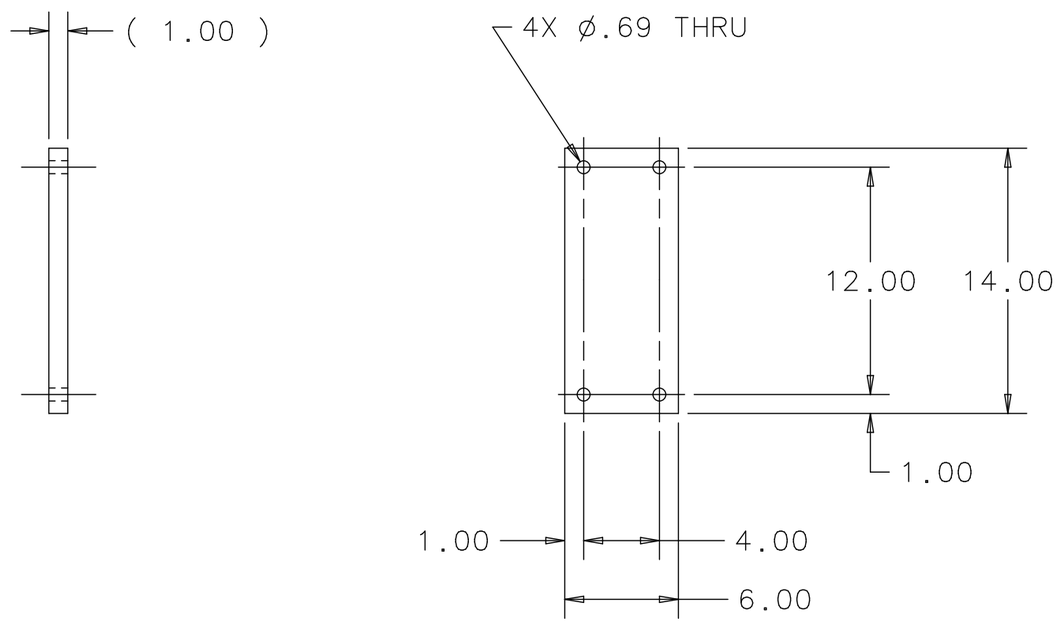

UNLESS OTHERWISE SPECIFIED			ORIGINATOR	W.CYKO	09-JAN-2007
.XX	.XXX	ANGLES	DRAWN	S.KINDELBERGER	09-JAN-2007
± .03	± ---	± ---	CHECKED	W.CYKO	23-MAY-2007
			APPROVED	J.KILMER	06-JUN-2007

1. BREAK ALL SHARP EDGES .015 MAX.
2. DO NOT SCALE DRAWING.
3. DIMENSIONS BASED UPON ASME Y14.5M-1994
4. MAX. ALL MACH. SURFACES 250
5. DRAWING UNITS: U.S. INCH

USED ON: MC-444362

MATERIAL: CARBON PLATE A36 PLATE 1" THK

FERMI NATIONAL ACCELERATOR LABORATORY
UNITED STATES DEPARTMENT OF ENERGY

MINERVA-MECH.-PLANE ANALYSIS HEAVY FRAME AND BRIDGE LOWER SUPPORT BOTTOM PLATE

SCALE	DRAWING NUMBER	SHEET	REV
1:4	3938.300-MB-444366	1 OF 1	

CREATED WITH : Ideas12NXSeries | GROUP: PPD/MECHANICAL DEPARTMENT

Created: 09:18:19 on 07-06-07 (D-M-Y) By: gsmith State: 1-INITIAL

REV	DESCRIPTION	DRAWN	DATE
		APPROVED	DATE

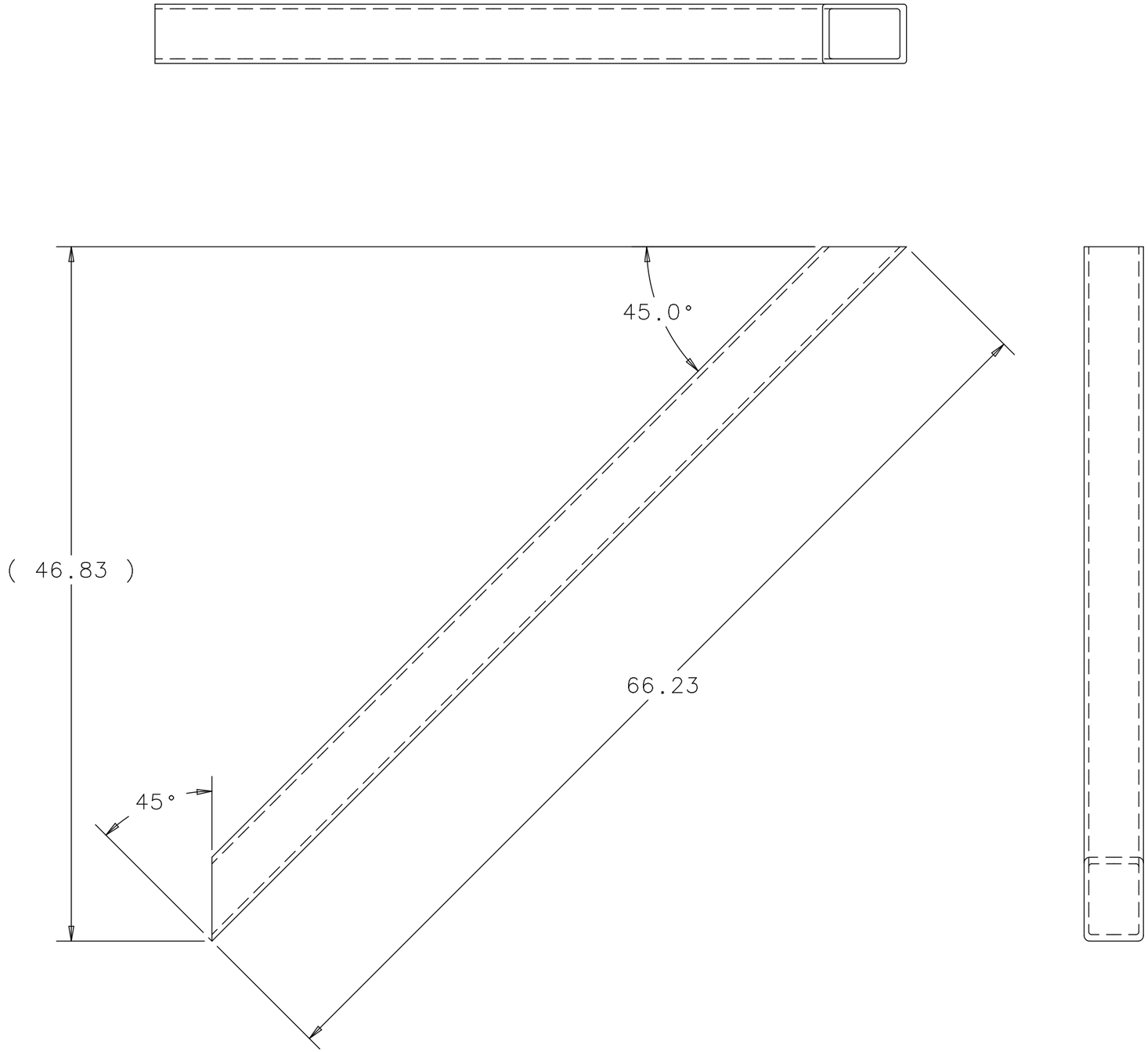

UNLESS OTHERWISE SPECIFIED		
.XX	.XXX	ANGLES
± .03	± ---	± .5°

1. BREAK ALL SHARP EDGES .015 MAX.
2. DO NOT SCALE DRAWING.
3. DIMENSIONS BASED UPON ASME Y14.5M-1994
4. MAX. ALL MACH. SURFACES 250
5. DRAWING UNITS: U.S. INCH

ORIGINATOR	W.CYKO	09-JAN-2007
DRAWN	S.KINDELBERGER	09-JAN-2007
CHECKED	W.CYKO	23-MAY-2007
APPROVED	J.KILMER	06-JUN-2007

USED ON: MC-444362

MATERIAL: STRUCTURAL TUBING 4 x 4 x 5/16 CARBON STEEL A500 GR. B

FERMI NATIONAL ACCELERATOR LABORATORY
UNITED STATES DEPARTMENT OF ENERGY

MINERVA-MECH.-PLANE ANALYSIS HEAVY FRAME AND BRIDGE LOWER SUPPORT TUBE LONG

SCALE	DRAWING NUMBER	SHEET	REV
1:8	3938.300-MB-444367	1 OF 1	

CREATED WITH : Ideas12NXSeries | GROUP: PPD/MECHANICAL DEPARTMENT

Created: 09:19:30 on 07-06-07 (D-M-Y) By: gsmith State: 1-INITIAL

REV	DESCRIPTION	DRAWN	DATE
		APPROVED	DATE

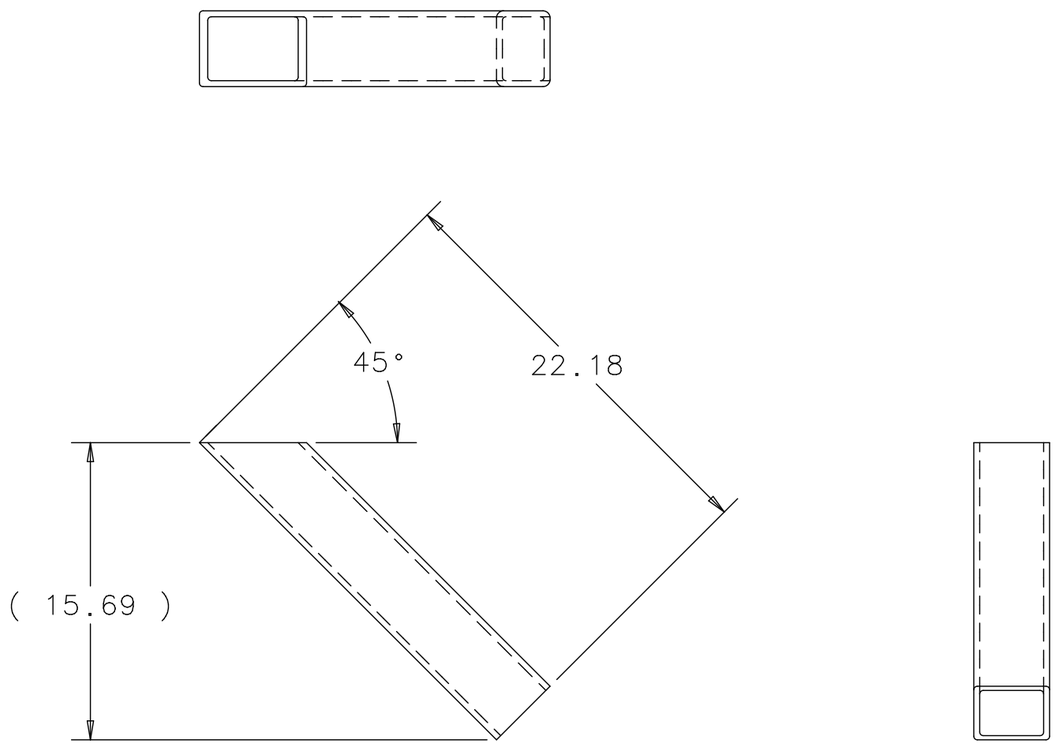

UNLESS OTHERWISE SPECIFIED			ORIGINATOR	W.CYKO	10-JAN-2007
.XX	.XXX	ANGLES	DRAWN	S.KINDELBERGER	10-JAN-2007
± .03	± ---	± .5°	CHECKED	W.CYKO	23-MAY-2007
			APPROVED	J.KILMER	06-JUN-2007

1. BREAK ALL SHARP EDGES .015 MAX.
2. DO NOT SCALE DRAWING.
3. DIMENSIONS BASED UPON ASME Y14.5M-1994
4. MAX. ALL MACH. SURFACES 250
5. DRAWING UNITS: U.S. INCH

USED ON: MC-444362

MATERIAL: STRUCTURAL TUBING 4 x 4 x 5/16 CARBON STEEL A500 GR. B

FERMI NATIONAL ACCELERATOR LABORATORY
UNITED STATES DEPARTMENT OF ENERGY

MINERVA-MECH.-PLANE ANALYSIS HEAVY FRAME AND BRIDGE LOWER SUPPORT TUBE SHORT

SCALE	DRAWING NUMBER	SHEET	REV
1:8	3938.300-MB-444375	1 OF 1	

CREATED WITH : Ideas12NXSeries | GROUP: PPD/MECHANICAL DEPARTMENT

Created: 09:20:50 on 07-06-07 (D-M-Y) By: gsmith State: 1-INITIAL

REV	DESCRIPTION	DRAWN	DATE
		APPROVED	DATE

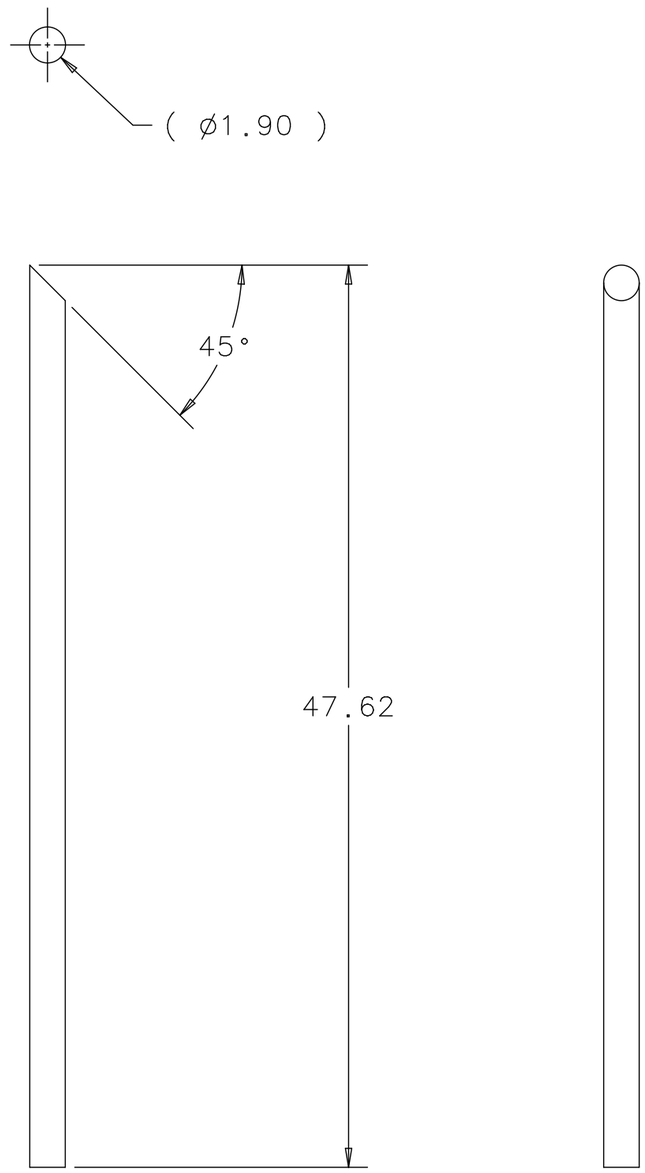

UNLESS OTHERWISE SPECIFIED			ORIGINATOR	W.CYKO	11-JAN-2007
.XX	.XXX	ANGLES	DRAWN	S.KINDELBERGER	09-JAN-2007
± .06	± ---	± 1°	CHECKED	W.CYKO	23-MAY-2007
			APPROVED	J.KILMER	06-JUN-2007

1. BREAK ALL SHARP EDGES .015 MAX.
2. DO NOT SCALE DRAWING.
3. DIMENSIONS BASED UPON ASME Y14.5M-1994
4. MAX. ALL MACH. SURFACES 250
5. DRAWING UNITS: U.S. INCH

USED ON: MC-444365

MATERIAL: ALUMINUM ROUND PIPE 6061-T6 SCH. 40 ø1 1/2 (1.90 O.D.)

FERMI NATIONAL ACCELERATOR LABORATORY
UNITED STATES DEPARTMENT OF ENERGY

MINERVA-MECH. PLANE ANALYSIS HEAVY FRAME AND BRIDGE RAIL VERTICAL PIPE

SCALE	DRAWING NUMBER	SHEET	REV
1:8	3938.300-MB-444379	1 OF 1	

CREATED WITH : Ideas12NXSeries | GROUP: PPD/MECHANICAL DEPARTMENT

Created: 09:12:30 on 07-06-07 (D-M-Y) By: gsmith State: 1-INITIAL

REV	DESCRIPTION	DRAWN	DATE
		APPROVED	DATE

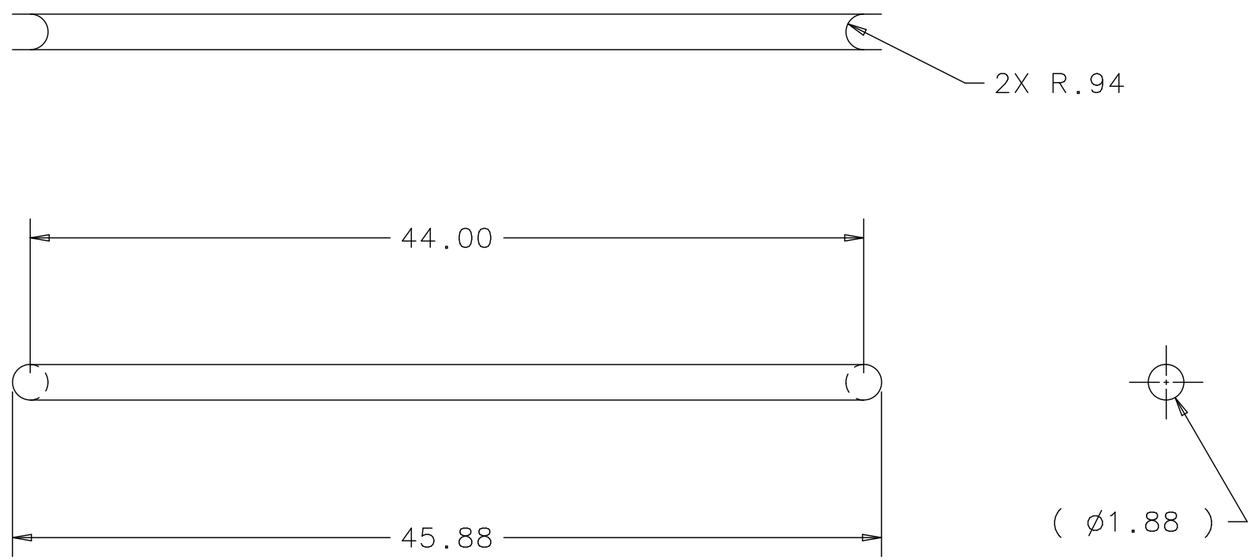

UNLESS OTHERWISE SPECIFIED			ORIGINATOR	W.CYKO	16-JAN-2007
.XX	.XXX	ANGLES	DRAWN	S.KINDELBERGER	16-JAN-2007
± .03	± ---	± ---	CHECKED	W.CYKO	23-MAY-2007
			APPROVED	J.KILMER	06-JUN-2007

1. BREAK ALL SHARP EDGES .015 MAX.
2. DO NOT SCALE DRAWING.
3. DIMENSIONS BASED UPON ASME Y14.5M-1994
4. MAX. ALL MACH. SURFACES 250
5. DRAWING UNITS: U.S. INCH

USED ON: MC-444365

MATERIAL: ALUMINUM ROUND PIPE 6061-T6 SCH. 40 ø1 1/2 (1.90 O.D.)

FERMI NATIONAL ACCELERATOR LABORATORY
UNITED STATES DEPARTMENT OF ENERGY

MINERVA-MECH. PLANE ANALYSIS HEAVY FRAME AND BRIDGE LOWER HORIZONTAL PIPE

SCALE	DRAWING NUMBER	SHEET	REV
1:8	3938.300-MB-444386	1 OF 1	

CREATED WITH : Ideas12NXSeries | GROUP: PPD/MECHANICAL DEPARTMENT

Created: 09:16:19 on 07-06-07 (D-M-Y) By: gsmith State: 1-INITIAL

REV	DESCRIPTION	DRAWN	DATE
		APPROVED	DATE

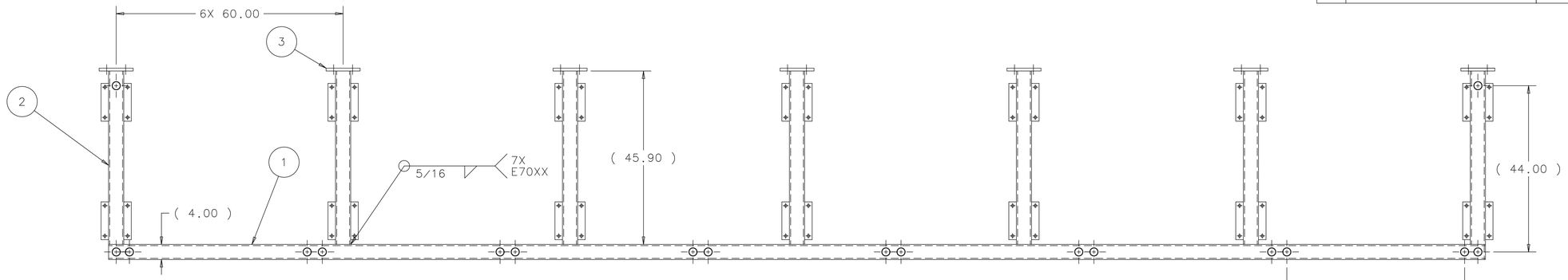

TOP VIEW WITHOUT GRATING,KICK PLATE & BEAM

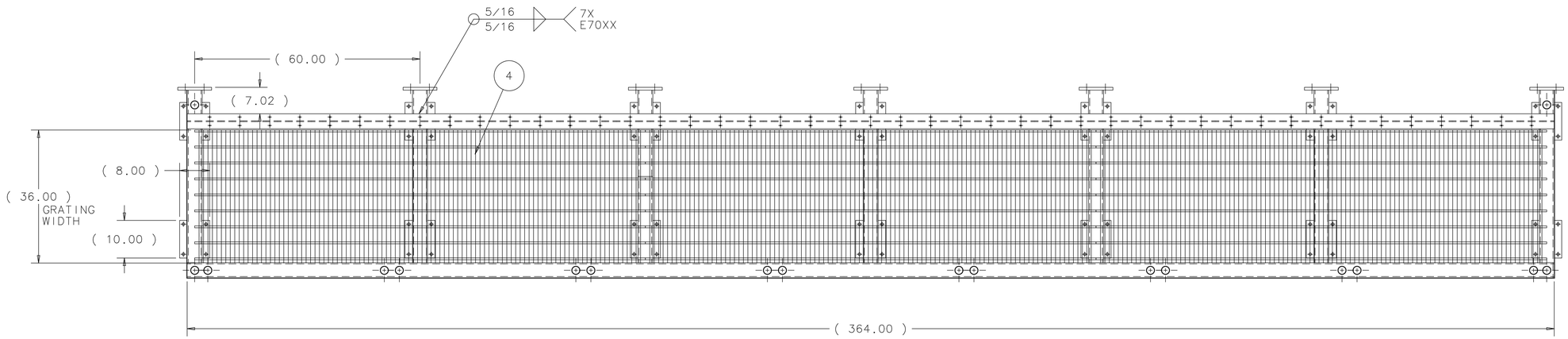

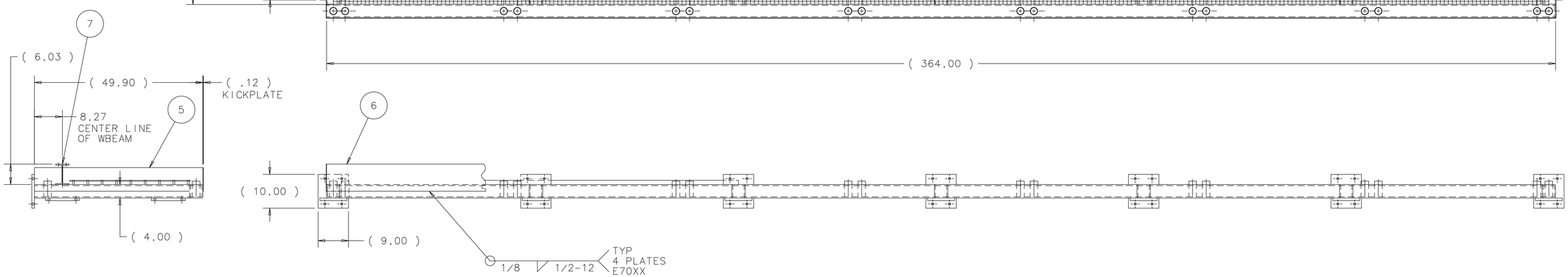

ITEM	PART NO.	DESCRIPTION OR SIZE	QTY.
7	MD-444508	PLATFORM SHAFT SUPPORT BEAM	1
6	COML	H.R. STRIP .125 X 6 X 182.00 LG.	2
5	COML	H.R. STRIP .125 X 6 X 50.00 LG.	2
4	COML	ALUMINUM BAR GRATING-1 1/4 3 FT.WIDE X 10 FT.LG.	8
3	MC-444435	PLATFORM CENTER BEAM WELDMENT	5
2	MC-444447	PLATFORM END BEAM WELDMENT	2
1	MD-445431	PLATFORM LONG BEAM WELDMENT	1

UNLESS OTHERWISE SPECIFIED			ORIGINATOR	W.CYKO	21-JAN-2007
.XX	.XXX	ANGLES	DRAWN	G.SMITH	21-JAN-2007
± .06	± ---	± ---	CHECKED	W.CYKO	23-MAY-2007
			APPROVED	J.KILMER	06-JUN-2007

1. BREAK ALL SHARP EDGES .015 MAX.
2. DO NOT SCALE DRAWING.
3. DIMENSIONS BASED UPON ASME Y14.5M-1994
4. MAX. ALL MACH. SURFACES 63
5. DRAWING UNITS: U.S. INCH

USED ON: ME-444503

MATERIAL: SEE PARTS LIST ABOVE

FERMI NATIONAL ACCELERATOR LABORATORY
UNITED STATES DEPARTMENT OF ENERGY

MINERVA-MECH-PLANE ANALYSIS HEAVY FRAME AND BRIDGE PLATFORM WELDMENT

SCALE	DRAWING NUMBER	SHEET	REV
1:16	3938.300-MD-444397	1 OF 1	

CREATED WITH : Ideas12NXSeries GROUP: PPD/MECHANICAL DEPARTMENT

Created: 08:53:13 on 08-06-07 (D-M-Y) By: gsmith State: 1-INITIAL

REV	DESCRIPTION	DRAWN	DATE
		APPROVED	DATE

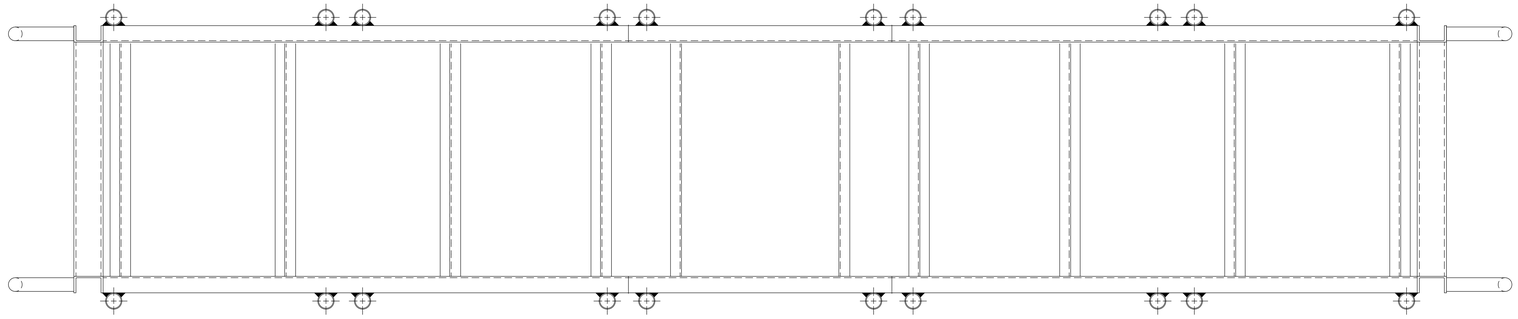

PLAN VIEW WITHOUT GRATING

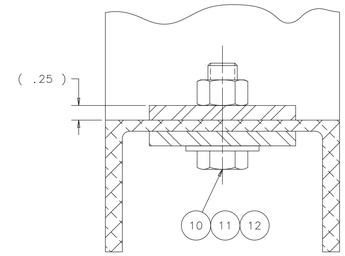

SECTION A–A
SCALE: 1:1

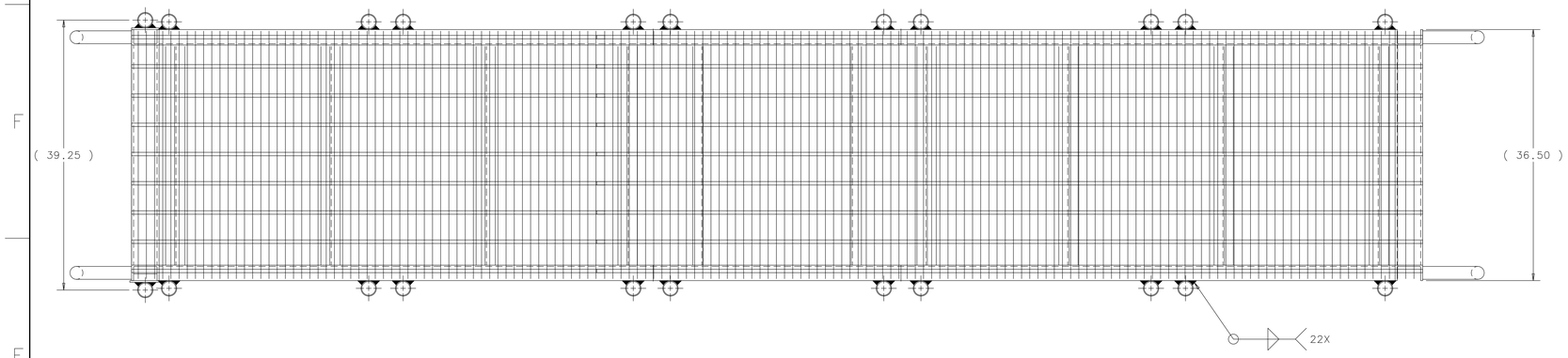

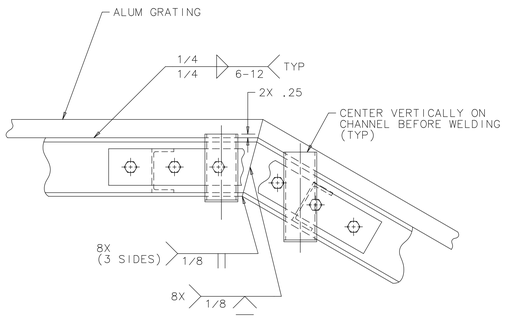

DETAIL B
SCALE: 1:4

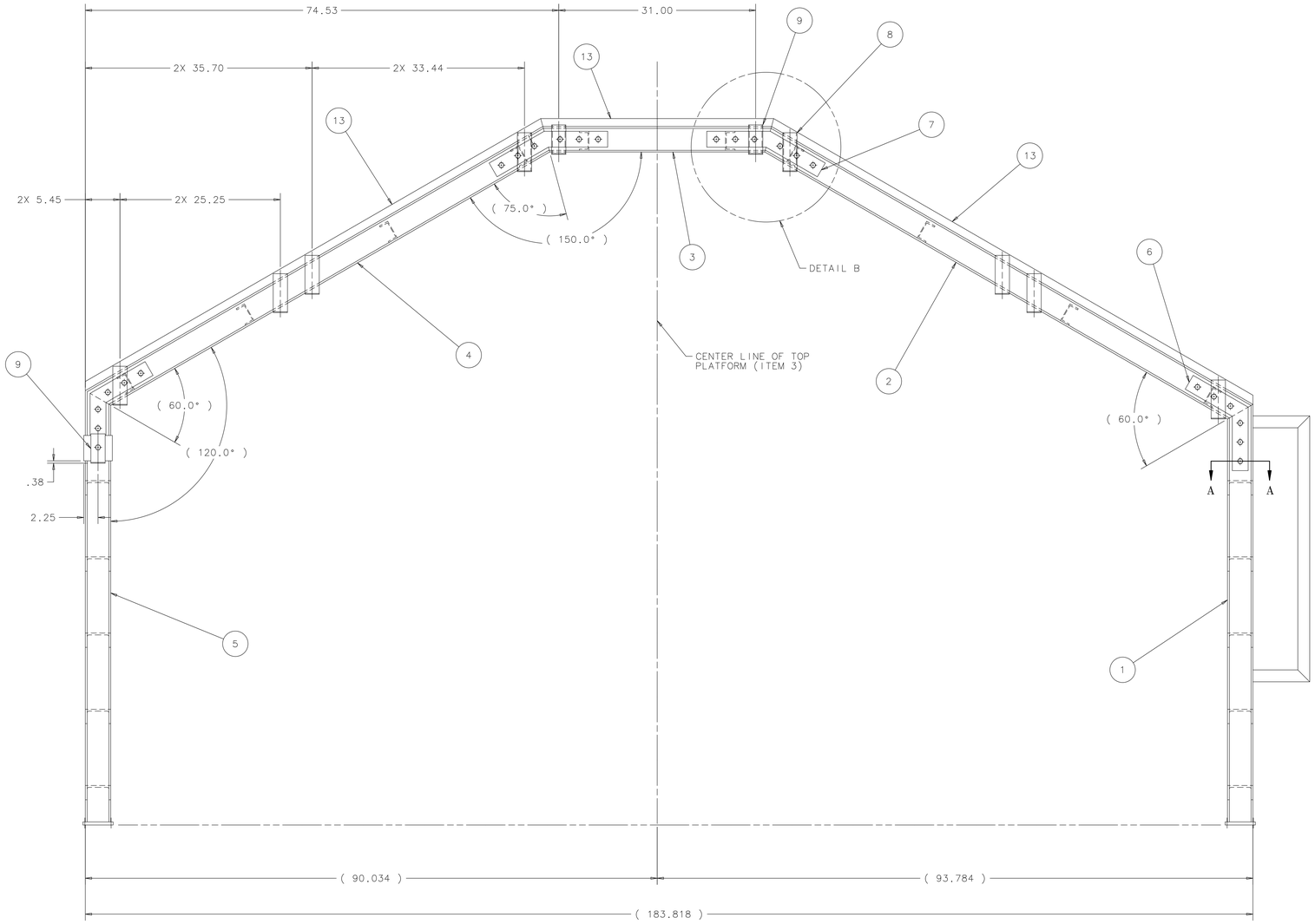

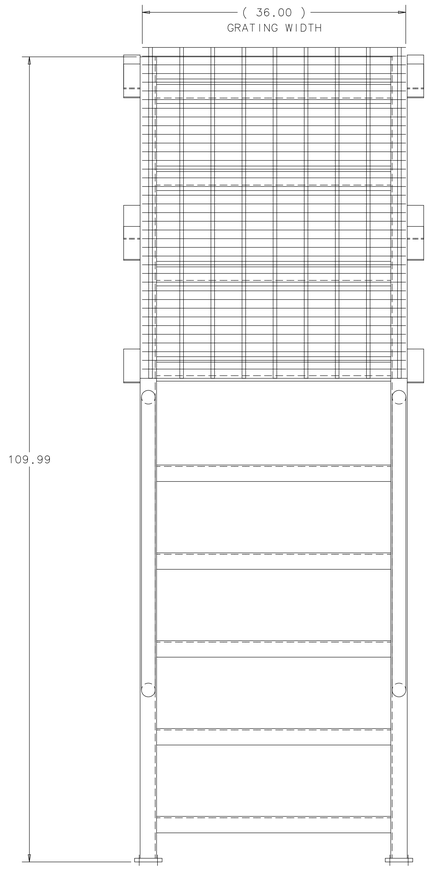

ITEM	PART NO.	DESCRIPTION OR SIZE	QTY.
13	COML	ALUMINUM BAR GRATING-1 1/4 3 FT. WIDE X LENGTH AS REQ'D	3
12	COML	FLAT WASHER-1/2 SCREW SIZE	32
11	COML	HEX NUT 1/2-13 UNC-2B-STEEL	32
10	COML	HEX HD. SCREW -12-13-UNC-2A X 1.50 LG. STEEL	32
9	MB-444437	LADDER-RAILLING HOLDER (SHORT)	6
8	MB-444436	LADDER-RAILLING HOLDER (LONG)	16
7	MC-444434	LADDER-STIFFENER PLATE UPPER	4
6	MC-444428	LADDER-STIFFENER PLATE LOWER	4
5	MC-444411	LADDER-VERTICAL WELDMENT L.H.	1
4	MC-444417	LADDER-PLATFORM WELDMENT L.H.	1
3	MC-444420	LADDER-TOP PLATFORM WELDMENT	1
2	MC-444414	LADDER-PLATFORM WELDMENT R.H.	1
1	MC-444405	LADDER-VERTICAL WELDMENT R.H.	1

PARTS LIST

UNLESS OTHERWISE SPECIFIED					
.XX	.XXX	ANGLES	ORIGINATOR	J.KILMER	23-JAN-2007
± .06	± ---	± ---	DRAWN	G.SMITH	23-JAN-2007
			CHECKED	W.CYKO	23-MAY-2007
			APPROVED	J.KILMER	06-JUN-2007

1. BREAK ALL SHARP EDGES .015 MAX.
2. DO NOT SCALE DRAWING.
3. DIMENSIONS BASED UPON ASME Y14.5M-1994
4. MAX. ALL MACH. SURFACES
5. DRAWING UNITS: U.S. INCH

USED ON: ME-444503

MATERIAL: SEE PARTS LIST ABOVE

FERMI NATIONAL ACCELERATOR LABORATORY
UNITED STATES DEPARTMENT OF ENERGY

MINERVA-MECH-PLANE ANALYSIS HEAVY FRAME AND BRIDGE LADDER FRAME WELDMENT

SCALE	DRAWING NUMBER	SHEET	REV
1:8	3938.300-ME-444399	1 OF 1	

CREATED WITH : Ideas12NXSeries GROUP: PPD/MECHANICAL DEPARTMENT

Created: 08:55:39 on 08-06-07 (D-M-Y) By: gsmith State: 1-INITIAL

REV	DESCRIPTION	DRAWN	DATE
		APPROVED	DATE

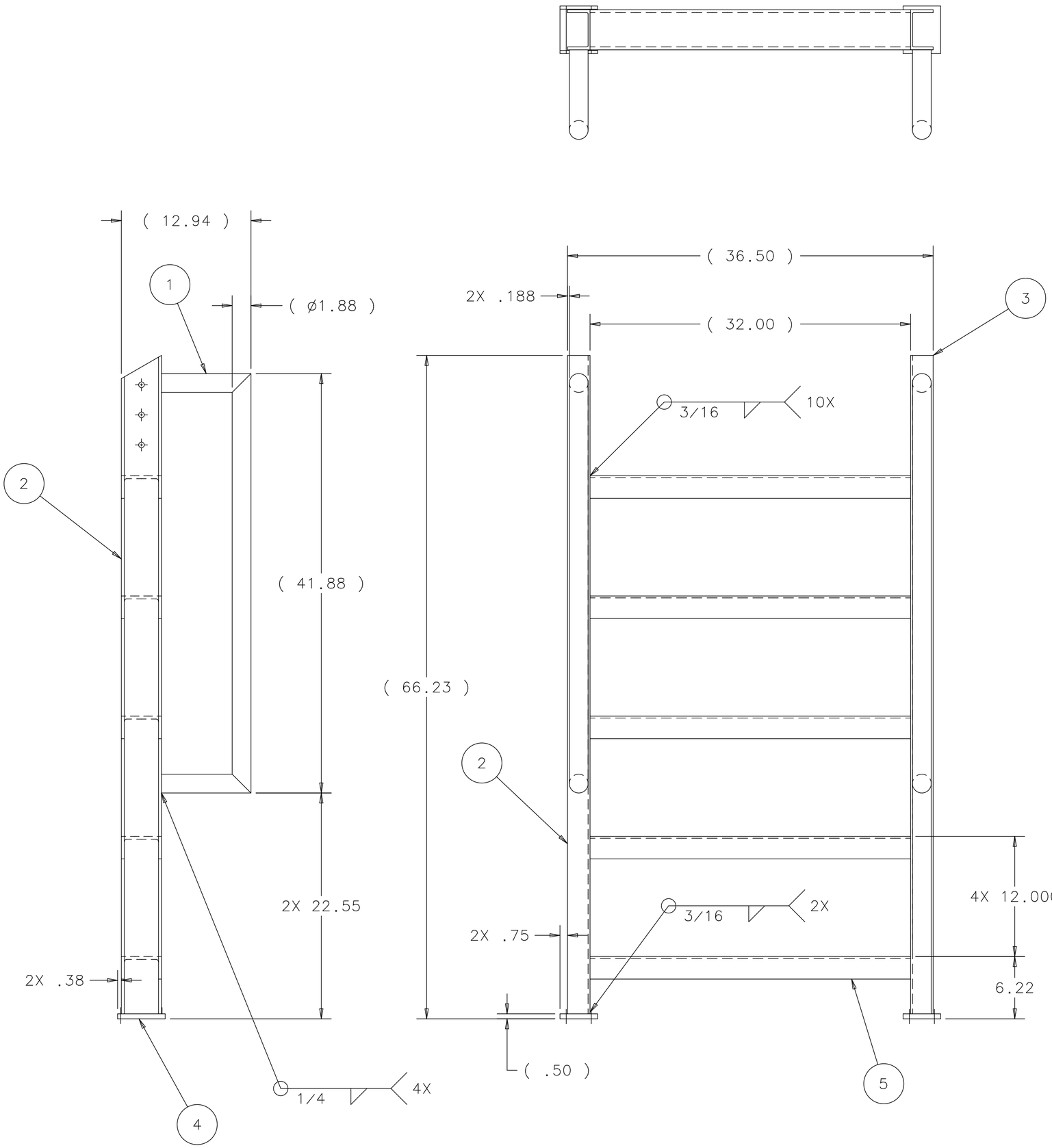

ITEM	PART NO.	DESCRIPTION OR SIZE	QTY.
5	COML	ALUMINUM CHANNEL-6061-T6 4 X .190 X 32.00 LG.	5
4	MB-444409	MOUNTING PLATE	2
3	MC-444408	VERTICAL CHANNEL R.H.	1
2	MC-444407	VERTICAL CHANNEL L.H.	1
1	MC-444406	RAILING WELDMENT	2

PARTS LIST

UNLESS OTHERWISE SPECIFIED			ORIGINATOR	J.KILMER	24-JAN-2007
.XX	.XXX	ANGLES	DRAWN	G.SMITH	24-JAN-2007
± .06	± ---	± ---	CHECKED	W.CYKO	23-MAY-2007
			APPROVED	J.KILMER	06-JUN-2007

1. BREAK ALL SHARP EDGES .015 MAX.
2. DO NOT SCALE DRAWING.
3. DIMENSIONS BASED UPON ASME Y14.5M-1994
4. MAX. ALL MACH. SURFACES 250
5. DRAWING UNITS: U.S. INCH

USED ON: ME-444399

MATERIAL: SEE PARTS LIST ABOVE

FERMI NATIONAL ACCELERATOR LABORATORY
UNITED STATES DEPARTMENT OF ENERGY

MINERVA-MECH-PLANE ANALYSIS HEAVY FRAME AND BRIDGE LADDER VERICAL WELDMENT R.H.

SCALE	DRAWING NUMBER	SHEET	REV
1:8	3938.300-MC-444405	1 OF 1	

CREATED WITH : Ideas12NXSeries | GROUP: PPD/MECHANICAL DEPARTMENT

Created: 10:11:38 on 07-06-07 (D-M-Y) By: gsmith State: 1-INITIAL

REV	DESCRIPTION	DRAWN	DATE
		APPROVED	DATE

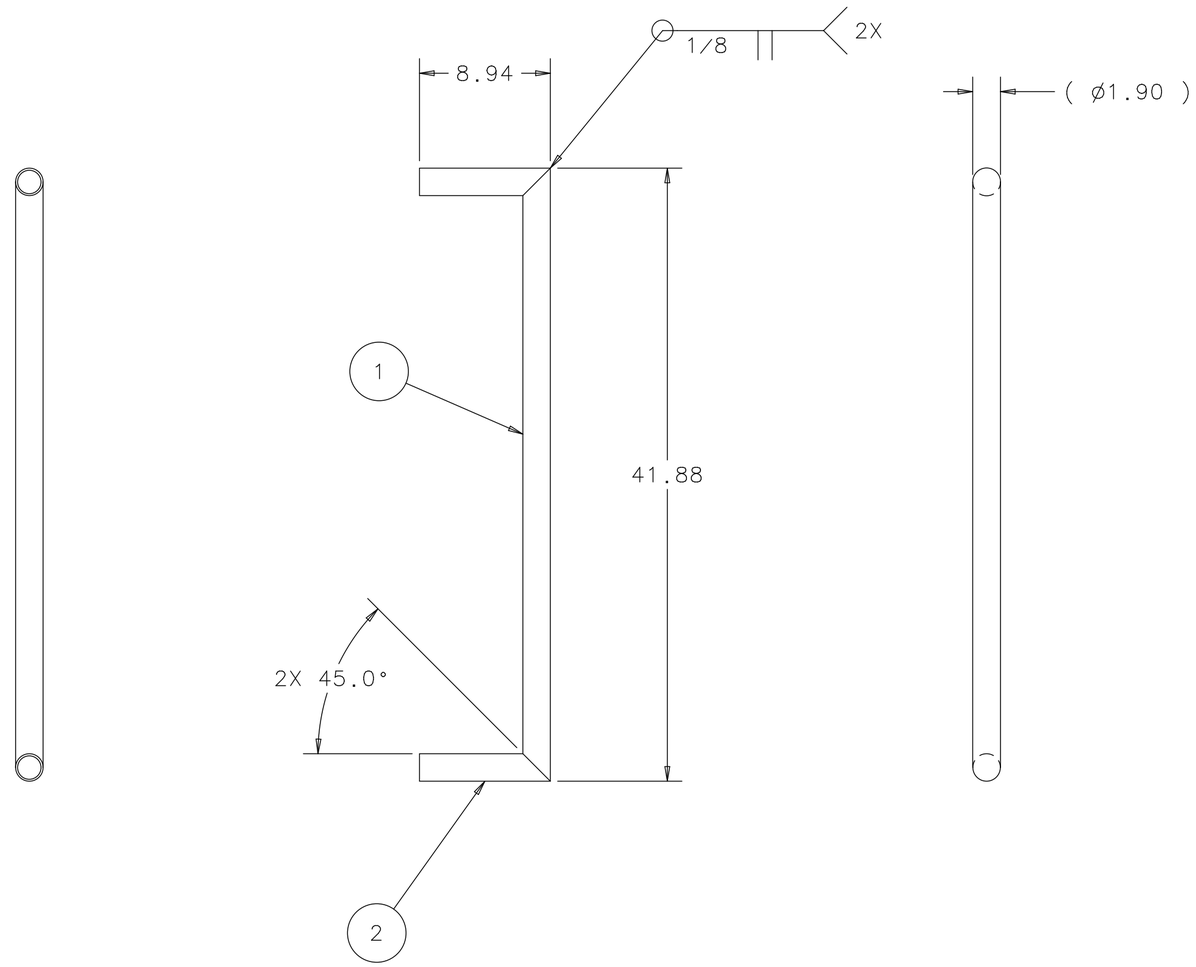

ITEM	PART NO.	DESCRIPTION OR SIZE	QTY.
2	COML	ALUMINUM PIPE-ø1 1/2 SCH. 40 X 8.94 LG.	2
1	COML	ALUMINUM PIPE-ø1 1/2 SCH. 40 X 41.88 LG.	1

PARTS LIST

UNLESS OTHERWISE SPECIFIED					
.XX	.XXX	ANGLES	ORIGINATOR	J.KILMER	24-JAN-2007
± .06	± ---	± ---	DRAWN	G.SMITH	24-JAN-2007
			CHECKED	W.CYKO	23-MAY-2007
			APPROVED	J.KILMER	06-JUN-2007

1. BREAK ALL SHARP EDGES .015 MAX.
2. DO NOT SCALE DRAWING.
3. DIMENSIONS BASED UPON ASME Y14.5M-1994
4. MAX. ALL MACH. SURFACES 250
5. DRAWING UNITS: U.S. INCH

USED ON: MC-444405

MATERIAL: SEE PARTS LIST ABOVE

FERMI NATIONAL ACCELERATOR LABORATORY
UNITED STATES DEPARTMENT OF ENERGY

MINERVA-MECH-PLANE ANALYSIS HEAVY FRAME AND BRIDGE LADDER RAILING WELDMENT

SCALE	DRAWING NUMBER	SHEET	REV
1:8	3938.300-MC-444406	1 OF 1	

CREATED WITH : Ideas12NXSeries | GROUP: PPD/MECHANICAL DEPARTMENT

Created: 10:21:17 on 07-06-07 (D-M-Y) By: gsmith State: 1-INITIAL

REV	DESCRIPTION	DRAWN	DATE
		APPROVED	DATE

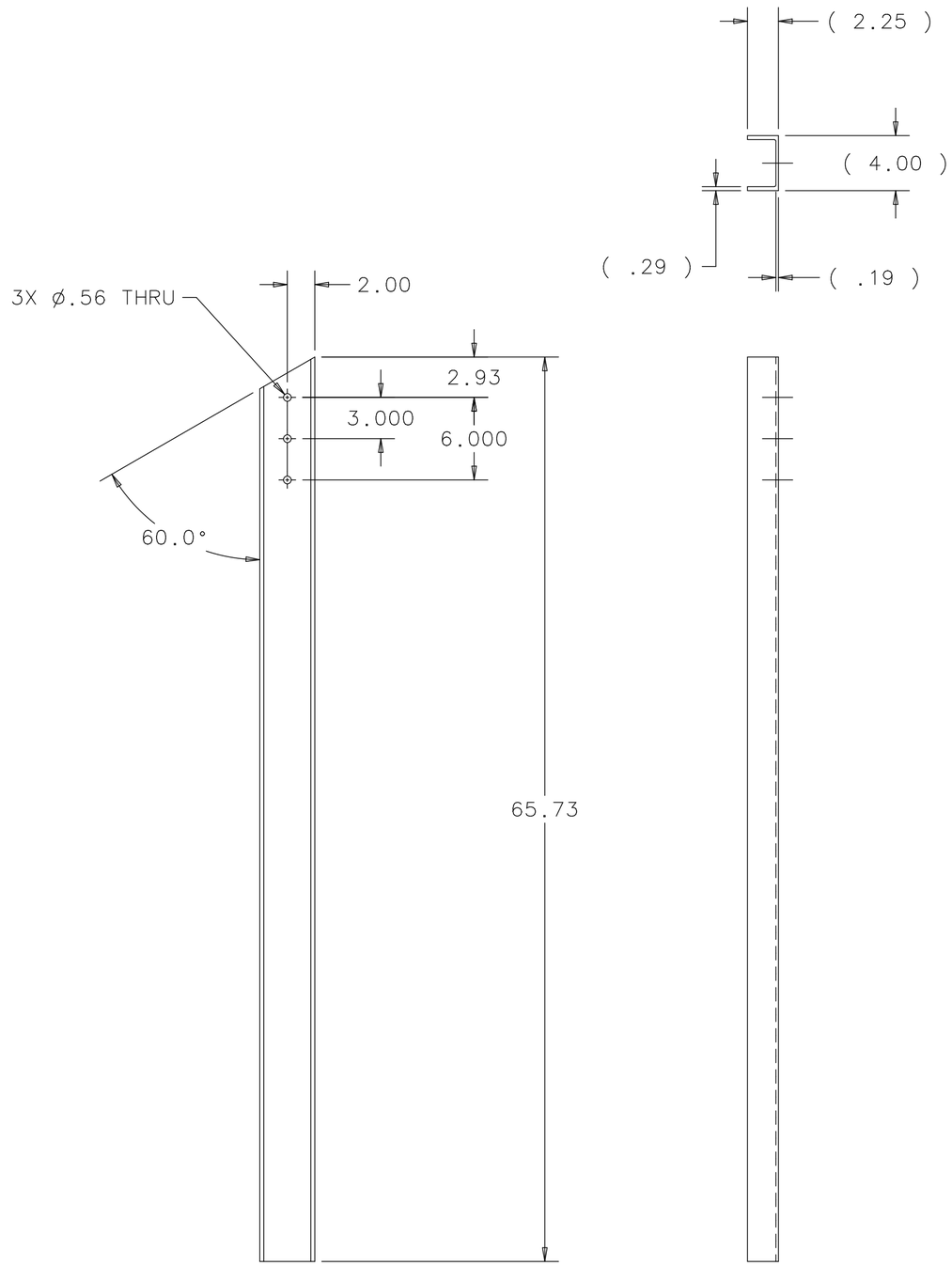

ITEM	PART NO.	DESCRIPTION OR SIZE	QTY.

PARTS LIST

UNLESS OTHERWISE SPECIFIED			ORIGINATOR	J.KILMER	24-JAN-2007
.XX	.XXX	ANGLES	DRAWN	G.SMITH	24-JAN-2007
± .06	± .015	± 1°	CHECKED	W.CYKO	23-MAY-2007
			APPROVED	J.KILMER	06-JUN-2007

1. BREAK ALL SHARP EDGES .015 MAX.
2. DO NOT SCALE DRAWING.
3. DIMENSIONS BASED UPON ASME Y14.5M-1994
4. MAX. ALL MACH. SURFACES 250
5. DRAWING UNITS: U.S. INCH

USED ON: MC-444405

MATERIAL: ALUMINUM CHANNEL-6061-T6 4 X .190

FERMI NATIONAL ACCELERATOR LABORATORY
UNITED STATES DEPARTMENT OF ENERGY

MINERVA-MECH-PLANE ANALYSIS HEAVY FRAME AND BRIDGE LADDER VERICAL CHANNEL L.H.

SCALE	DRAWING NUMBER	SHEET	REV
1:8	3938.300-MC-444407	1 OF 1	

CREATED WITH : Ideas12NXSeries | GROUP: PPD/MECHANICAL DEPARTMENT

Created: 08:03:43 on 08-06-07 (D-M-Y) By: gsmith State: 1-INITIAL

REV	DESCRIPTION	DRAWN	DATE
		APPROVED	DATE

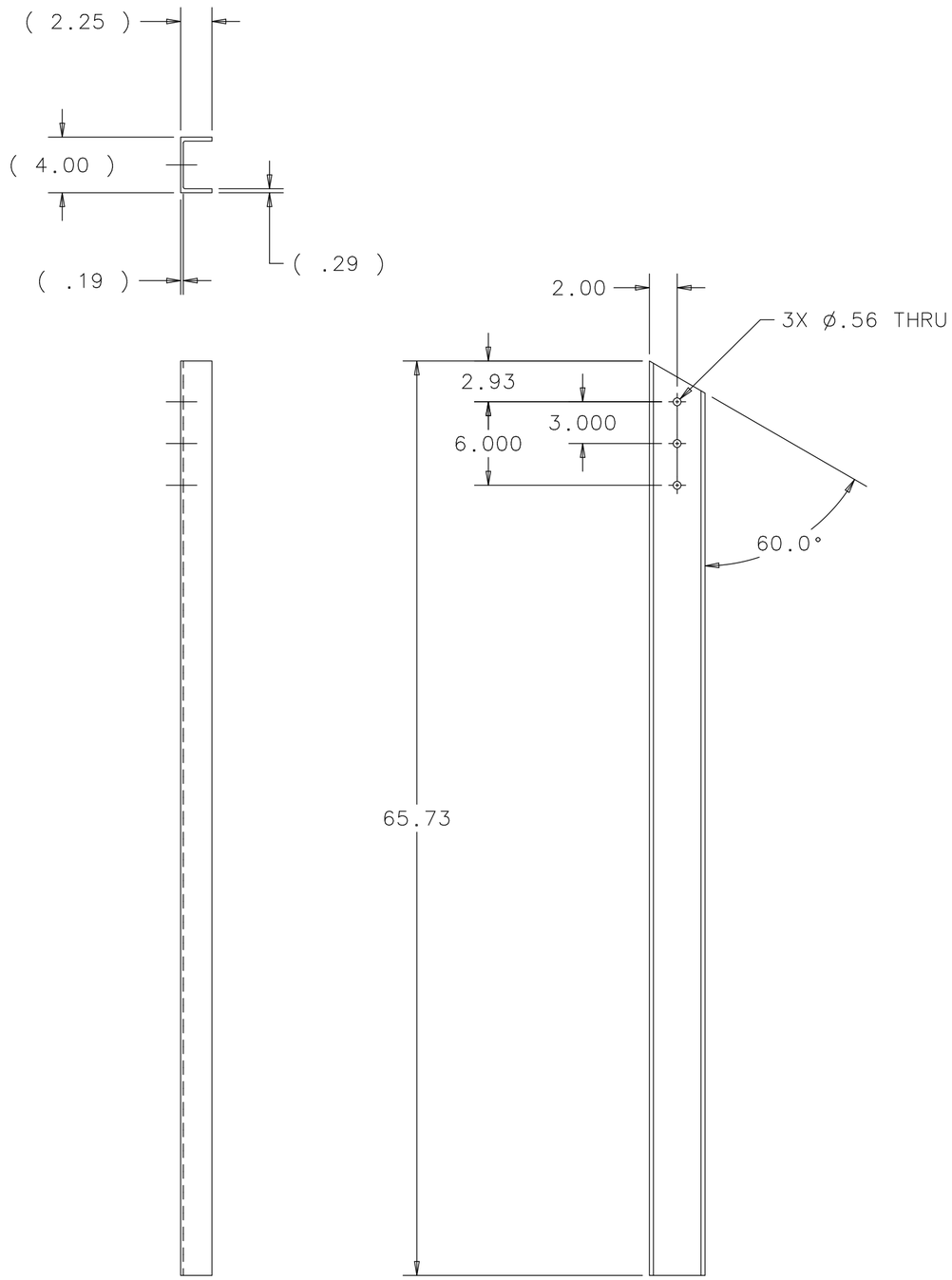

ITEM	PART NO.	DESCRIPTION OR SIZE	QTY.

PARTS LIST

UNLESS OTHERWISE SPECIFIED			ORIGINATOR	J.KILMER	24-JAN-2007
.XX	.XXX	ANGLES	DRAWN	G.SMITH	24-JAN-2007
± .06	± .015	± 1°	CHECKED	W.CYKO	23-MAY-2007
			APPROVED	J.KILMER	06-JUN-2007

1. BREAK ALL SHARP EDGES .015 MAX.
2. DO NOT SCALE DRAWING.
3. DIMENSIONS BASED UPON ASME Y14.5M-1994
4. MAX. ALL MACH. SURFACES 250
5. DRAWING UNITS: U.S. INCH

USED ON: MC-444405

MATERIAL: ALUMINUM CHANNEL-6061-T6 4 X .190

FERMI NATIONAL ACCELERATOR LABORATORY
UNITED STATES DEPARTMENT OF ENERGY

MINERVA-MECH-PLANE ANALYSIS HEAVY FRAME AND BRIDGE LADDER VERICAL CHANNEL R.H.

SCALE	DRAWING NUMBER	SHEET	REV
1:8	3938.300-MC-444408	1 OF 1	

CREATED WITH : Ideas12NXSeries | GROUP: PPD/MECHANICAL DEPARTMENT

Created: 10:19:59 on 07-06-07 (D-M-Y) By: gsmith State: 1-INITIAL

REV	DESCRIPTION	DRAWN	DATE
		APPROVED	DATE

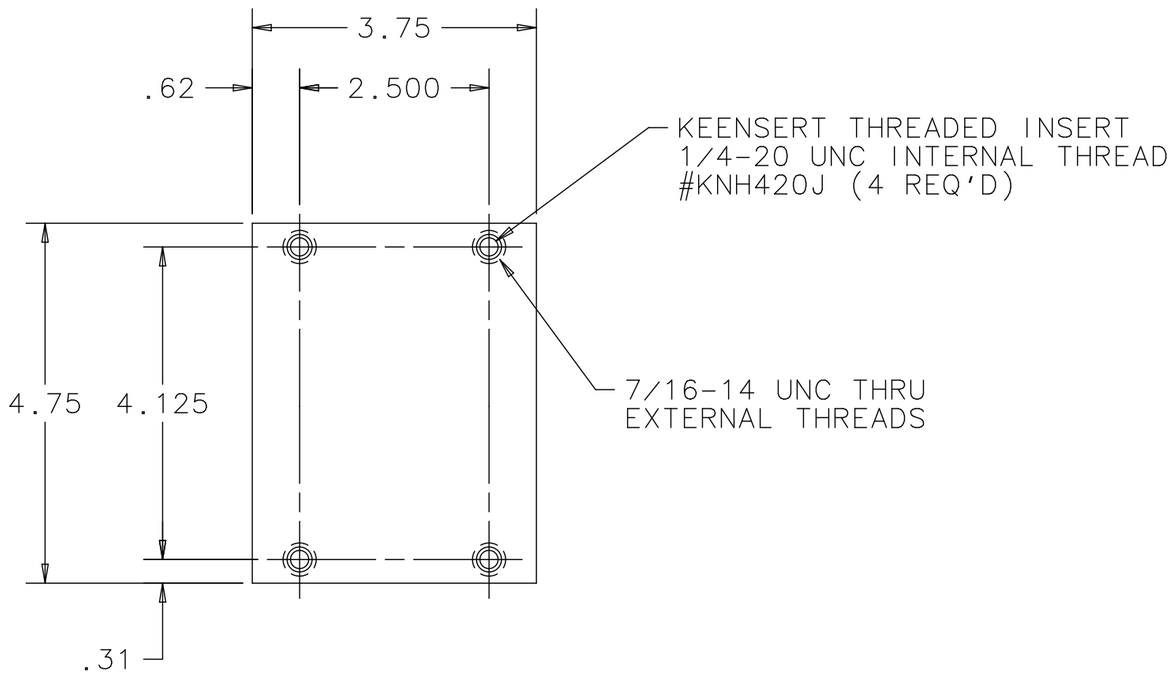

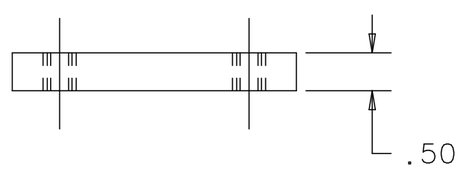

ITEM	PART NO.	DESCRIPTION OR SIZE	QTY.

PARTS LIST

UNLESS OTHERWISE SPECIFIED			ORIGINATOR	J.KILMER	24-JAN-2007
.XX	.XXX	ANGLES	DRAWN	G.SMITH	24-JAN-2007
± .03	± .015	± ---	CHECKED	W.CYKO	23-MAY-2007
			APPROVED	J.KILMER	06-JUN-2007

1. BREAK ALL SHARP EDGES .015 MAX.
2. DO NOT SCALE DRAWING.
3. DIMENSIONS BASED UPON ASME Y14.5M-1994
4. MAX. ALL MACH. SURFACES 125
5. DRAWING UNITS: U.S. INCH

USED ON: MC-444405

MATERIAL: 6061-T6 ALUMINUM

FERMI NATIONAL ACCELERATOR LABORATORY
UNITED STATES DEPARTMENT OF ENERGY

MINERVA-MECH-PLANE ANALYSIS HEAVY FRAME AND BRIDGE MOUNTING PLATE

SCALE	DRAWING NUMBER	SHEET	REV
1:2	3938.300-MB-444409	1 OF 1	

CREATED WITH : Ideas12NXSeries | GROUP: PPD/MECHANICAL DEPARTMENT

Created: 08:21:45 on 07-06-07 (D-M-Y) By: gsmith State: 1-INITIAL

REV	DESCRIPTION	DRAWN	DATE
		APPROVED	DATE

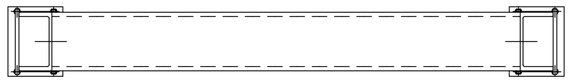

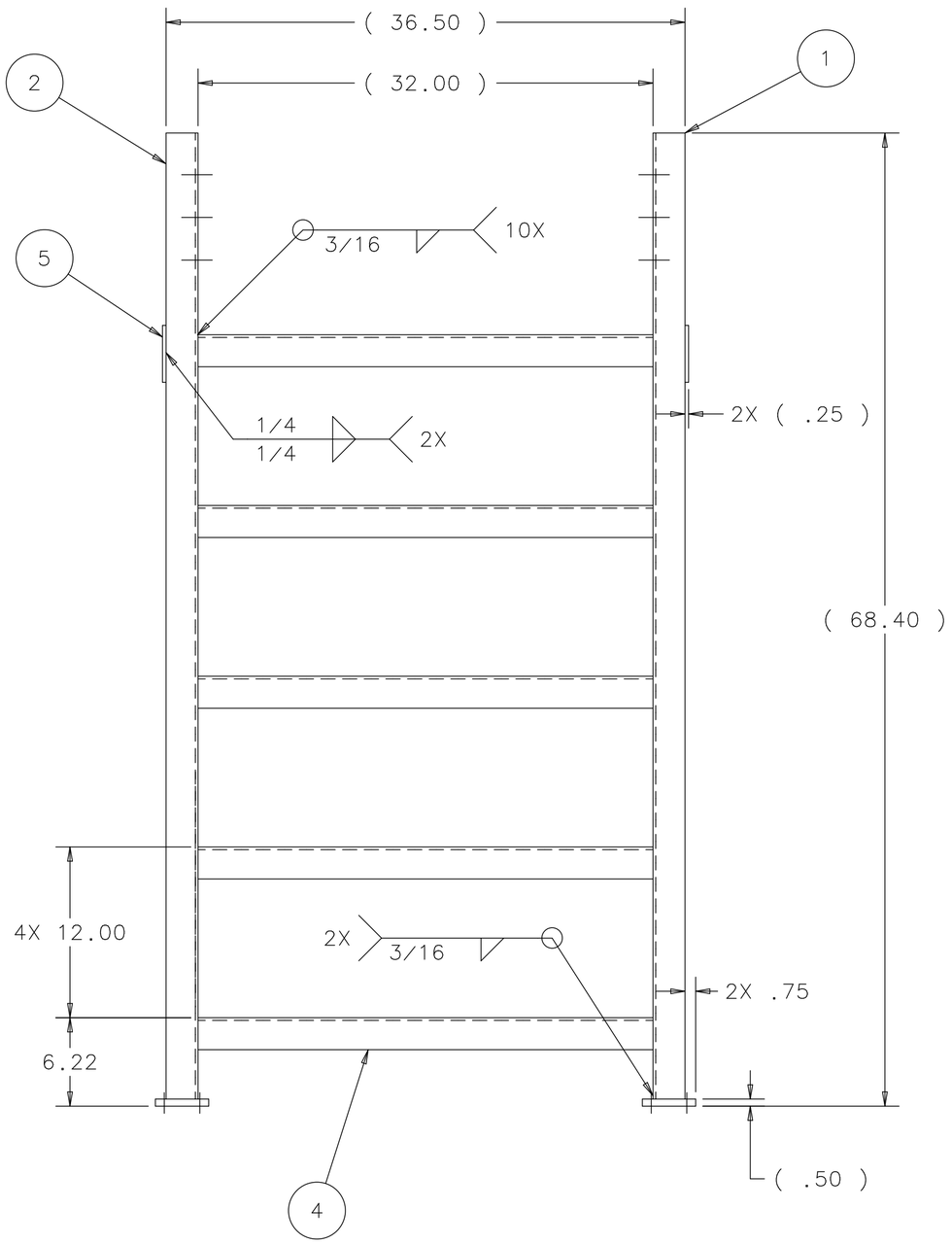

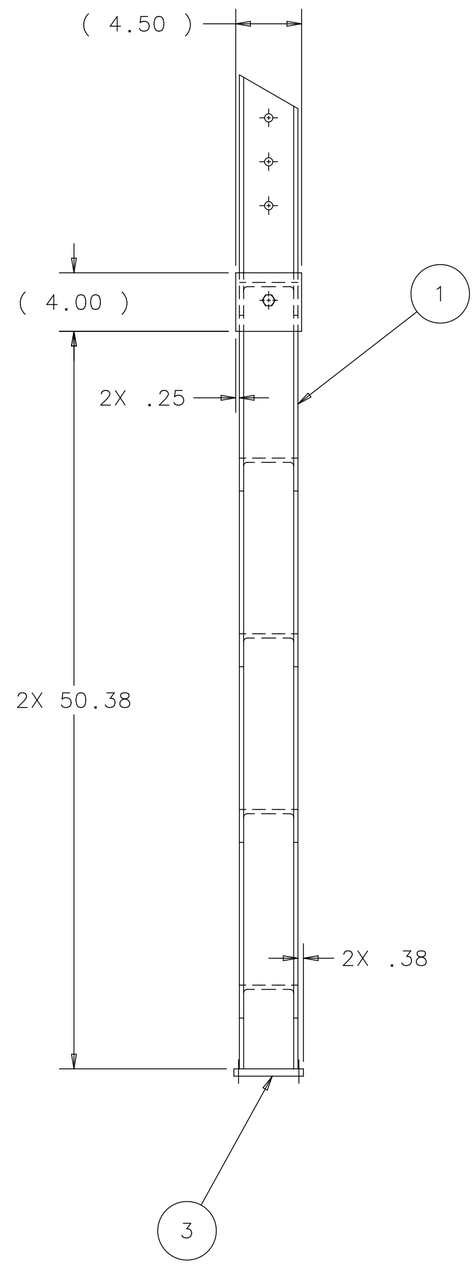

ITEM	PART NO.	DESCRIPTION OR SIZE	QTY.
5	COML	ALUMINUM PLATE-6061-T6 4.50 X 4.00 X .25	2
4	COML	ALUMINUM CHANNEL-6061-T6 4 X .190 X 32.00 LG.	5
3	MB-444409	MOUNTING PLATE	2
2	MC-444412	VERTICAL CHANNEL R.H.	1
1	MC-444413	VERTICAL CHANNEL L.H.	1

PARTS LIST

UNLESS OTHERWISE SPECIFIED			ORIGINATOR	J.KILMER	25-JAN-2007
.XX	.XXX	ANGLES	DRAWN	G.SMITH	25-JAN-2007
± .06	± ---	± ---	CHECKED	W.CYKO	23-MAY-2007
			APPROVED	J.KILMER	06-JUN-2007

1. BREAK ALL SHARP EDGES .015 MAX.
2. DO NOT SCALE DRAWING.
3. DIMENSIONS BASED UPON ASME Y14.5M-1994
4. MAX. ALL MACH. SURFACES 250
5. DRAWING UNITS: U.S. INCH

USED ON: ME-444399

MATERIAL: SEE PARTS LIST ABOVE

FERMI NATIONAL ACCELERATOR LABORATORY
UNITED STATES DEPARTMENT OF ENERGY

MINERVA-MECH-PLANE ANALYSIS HEAVY FRAME AND BRIDGE LADDER VERICAL WELDMENT L.H.

SCALE	DRAWING NUMBER	SHEET	REV
1:8	3938.300-MC-444411	1 OF 1	

CREATED WITH : Ideas12NXSeries GROUP: PPD/MECHANICAL DEPARTMENT

Created: 08:08:34 on 08-06-07 (D-M-Y) By: gsmith State: 1-INITIAL

REV	DESCRIPTION	DRAWN	DATE
		APPROVED	DATE

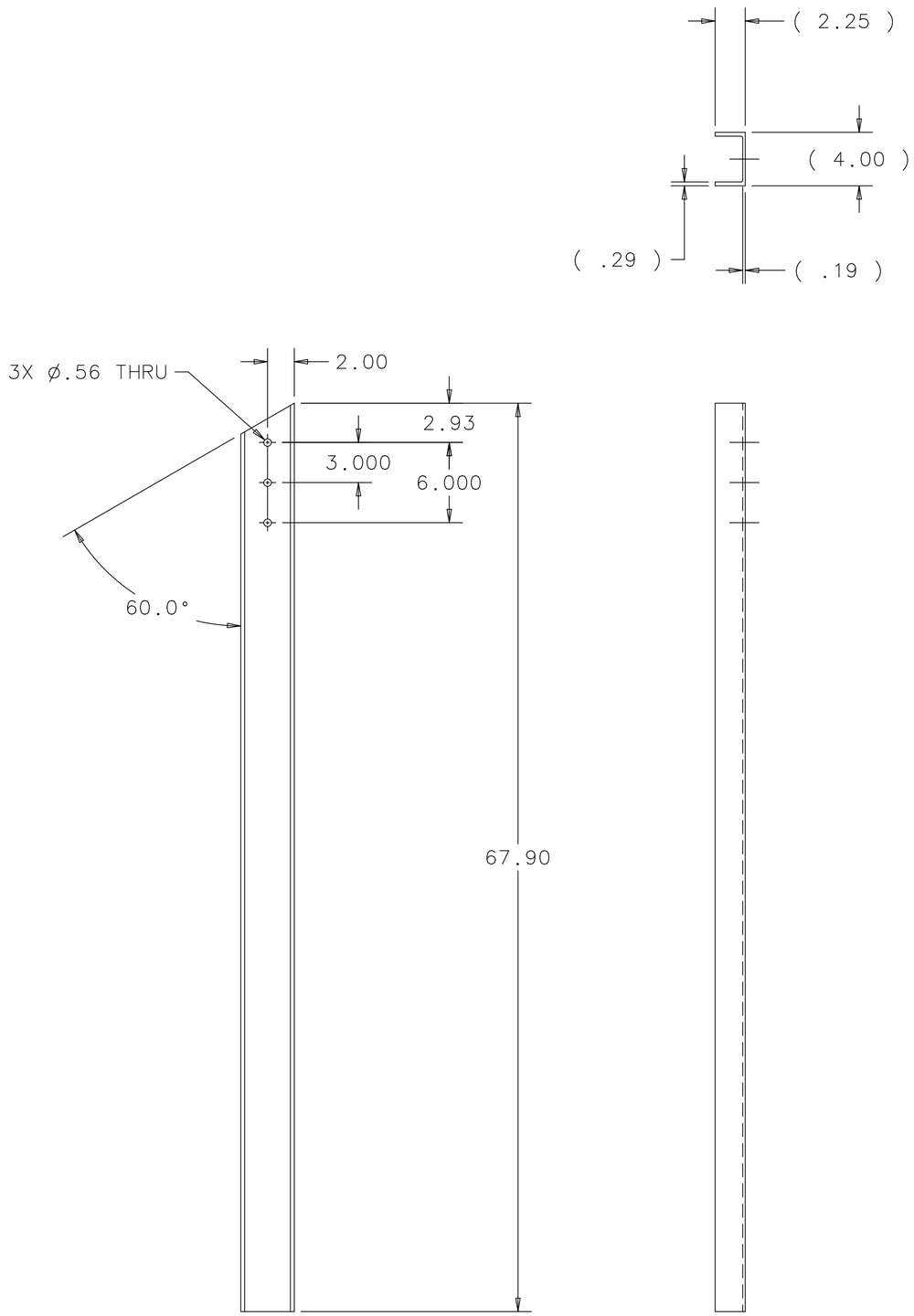

ITEM	PART NO.	DESCRIPTION OR SIZE	QTY.

PARTS LIST

UNLESS OTHERWISE SPECIFIED			ORIGINATOR	J.KILMER	25-JAN-2007
.XX	.XXX	ANGLES	DRAWN	G.SMITH	25-JAN-2007
± .06	± .015	± 1°	CHECKED	W.CYKO	23-MAY-2007
			APPROVED	J.KILMER	06-JUN-2007

1. BREAK ALL SHARP EDGES .015 MAX.
2. DO NOT SCALE DRAWING.
3. DIMENSIONS BASED UPON ASME Y14.5M-1994
4. MAX. ALL MACH. SURFACES 250
5. DRAWING UNITS: U.S. INCH

USED ON: MC-444411

MATERIAL: ALUMINUM CHANNEL-6061-T6 4 X .190

FERMI NATIONAL ACCELERATOR LABORATORY
UNITED STATES DEPARTMENT OF ENERGY

MINERVA-MECH-PLANE ANALYSIS HEAVY FRAME AND BRIDGE LADDER VERICAL CHANNEL L.H.-R.H.

SCALE	DRAWING NUMBER	SHEET	REV
1:8	3938.300-MC-444412	1 OF 1	

CREATED WITH : Ideas12NXSeries | GROUP: PPD/MECHANICAL DEPARTMENT

Created: 08:07:14 on 08-06-07 (D-M-Y) By: gsmith State: 1-INITIAL

REV	DESCRIPTION	DRAWN	DATE
		APPROVED	DATE

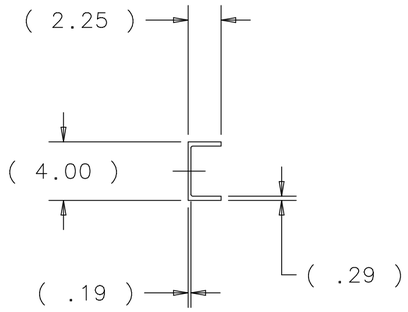

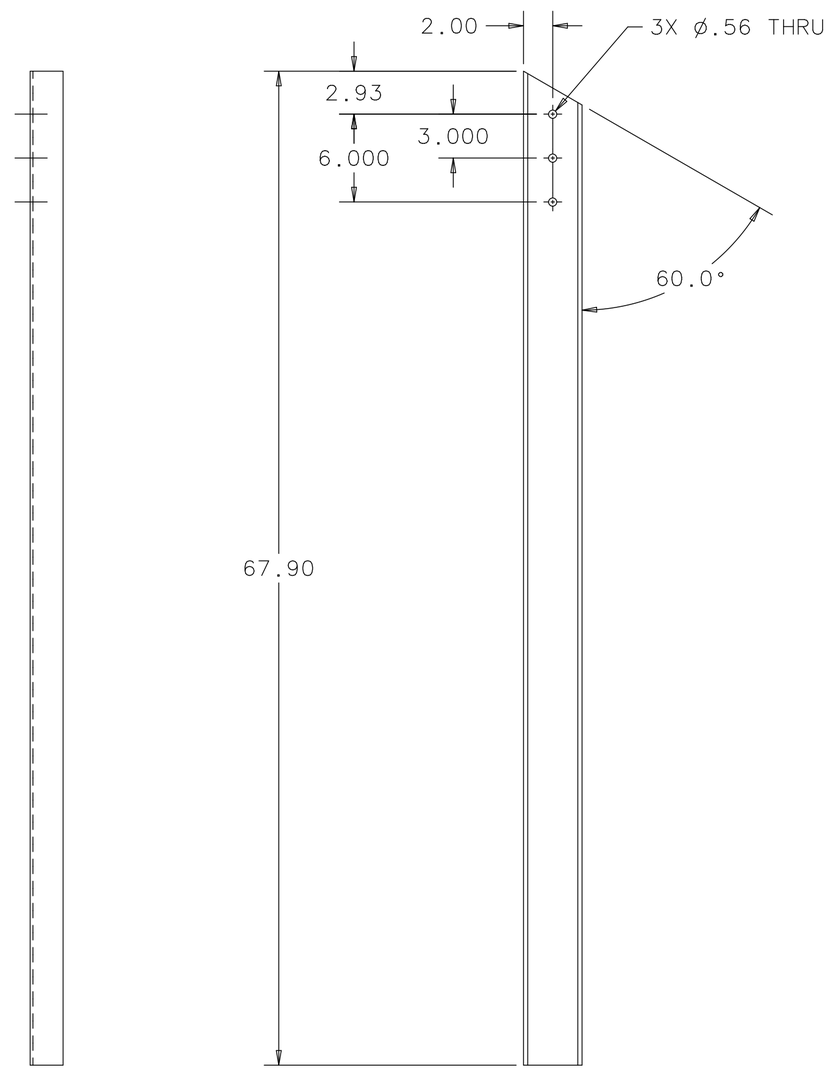

ITEM	PART NO.	DESCRIPTION OR SIZE	QTY.

PARTS LIST

UNLESS OTHERWISE SPECIFIED			ORIGINATOR	J.KILMER	25-JAN-2007
.XX	.XXX	ANGLES	DRAWN	G.SMITH	25-JAN-2007
± .06	± .015	± 1°	CHECKED	W.CYKO	23-MAY-2007
			APPROVED	J.KILMER	06-JUN-2007

1. BREAK ALL SHARP EDGES .015 MAX.
2. DO NOT SCALE DRAWING.
3. DIMENSIONS BASED UPON ASME Y14.5M-1994
4. MAX. ALL MACH. SURFACES 250
5. DRAWING UNITS: U.S. INCH

USED ON: MC-444411

MATERIAL: ALUMINUM CHANNEL-6061-T6 4 X .190

FERMI NATIONAL ACCELERATOR LABORATORY
UNITED STATES DEPARTMENT OF ENERGY

MINERVA-MECH-PLANE ANALYSIS HEAVY FRAME AND BRIDGE LADDER VERICAL CHANNEL L.H.-L.H.

SCALE	DRAWING NUMBER	SHEET	REV
1:8	3938.300-MC-444413	1 OF 1	

CREATED WITH : Ideas12NXSeries | GROUP: PPD/MECHANICAL DEPARTMENT

REV	DESCRIPTION	DRAWN	DATE
		APPROVED	DATE

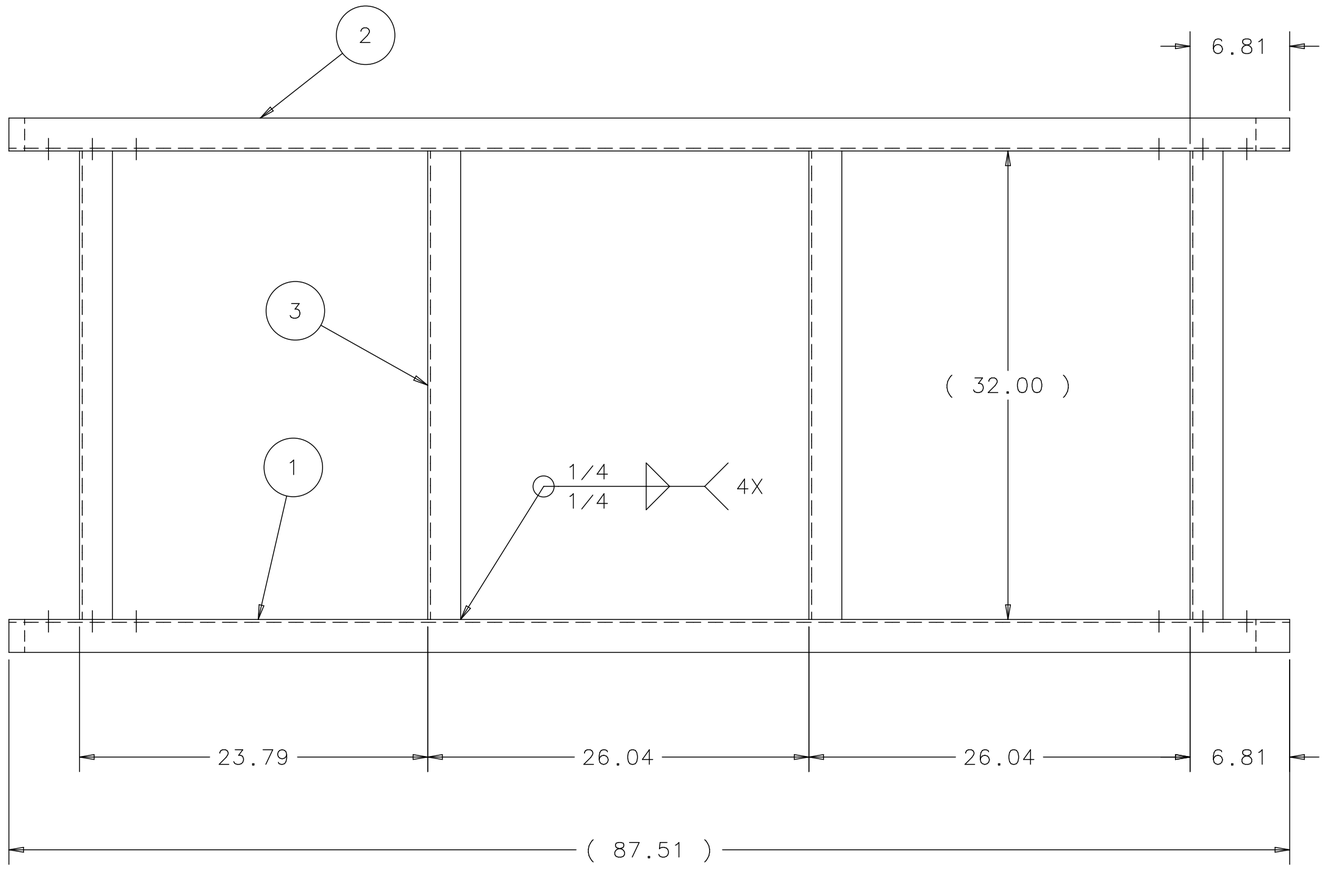

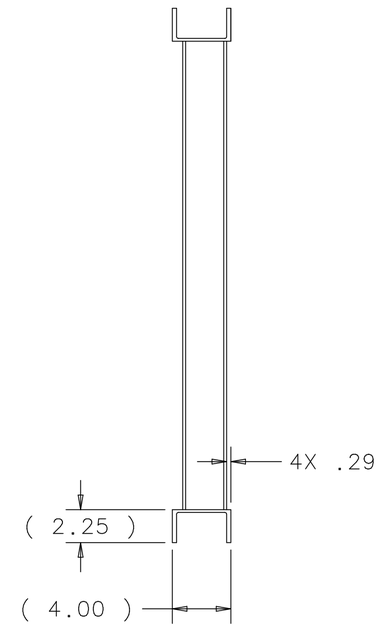

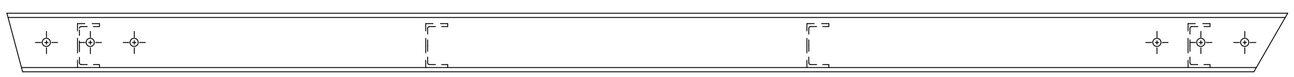

ITEM	PART NO.	DESCRIPTION OR SIZE	QTY.
3	COML	ALUMINUM CHANNEL-6061-T6 3 X .130 X 32.00 LG.	4
2	MC-444416	PLATFORM CHANNEL R.H.	1
1	MC-444415	PLATFORM CHANNEL L.H.	1

PARTS LIST

UNLESS OTHERWISE SPECIFIED					
.XX	.XXX	ANGLES	ORIGINATOR	J.KILMER	25-JAN-2007
± .06	± ---	± ---	DRAWN	G.SMITH	25-JAN-2007
			CHECKED	W.CYKO	23-MAY-2007
			APPROVED	J.KILMER	06-JUN-2007

1. BREAK ALL SHARP EDGES .015 MAX.
2. DO NOT SCALE DRAWING.
3. DIMENSIONS BASED UPON ASME Y14.5M-1994
4. MAX. ALL MACH. SURFACES 250
5. DRAWING UNITS: U.S. INCH

USED ON: ME-444399

MATERIAL: SEE PARTS LIST ABOVE

FERMI NATIONAL ACCELERATOR LABORATORY
UNITED STATES DEPARTMENT OF ENERGY

MINERVA-MECH-PLANE ANALYSIS HEAVY FRAME AND BRIDGE LADDER PLATFORM WELDMENT R.H.

SCALE	DRAWING NUMBER	SHEET	REV
1:8	3938.300-MC-444414	1 OF 1	

CREATED WITH : Ideas12NXSeries | GROUP: PPD/MECHANICAL DEPARTMENT

Created: 10:06:52 on 07-06-07 (D-M-Y) By: gsmith State: 1-INITIAL

REV	DESCRIPTION	DRAWN	DATE
		APPROVED	DATE

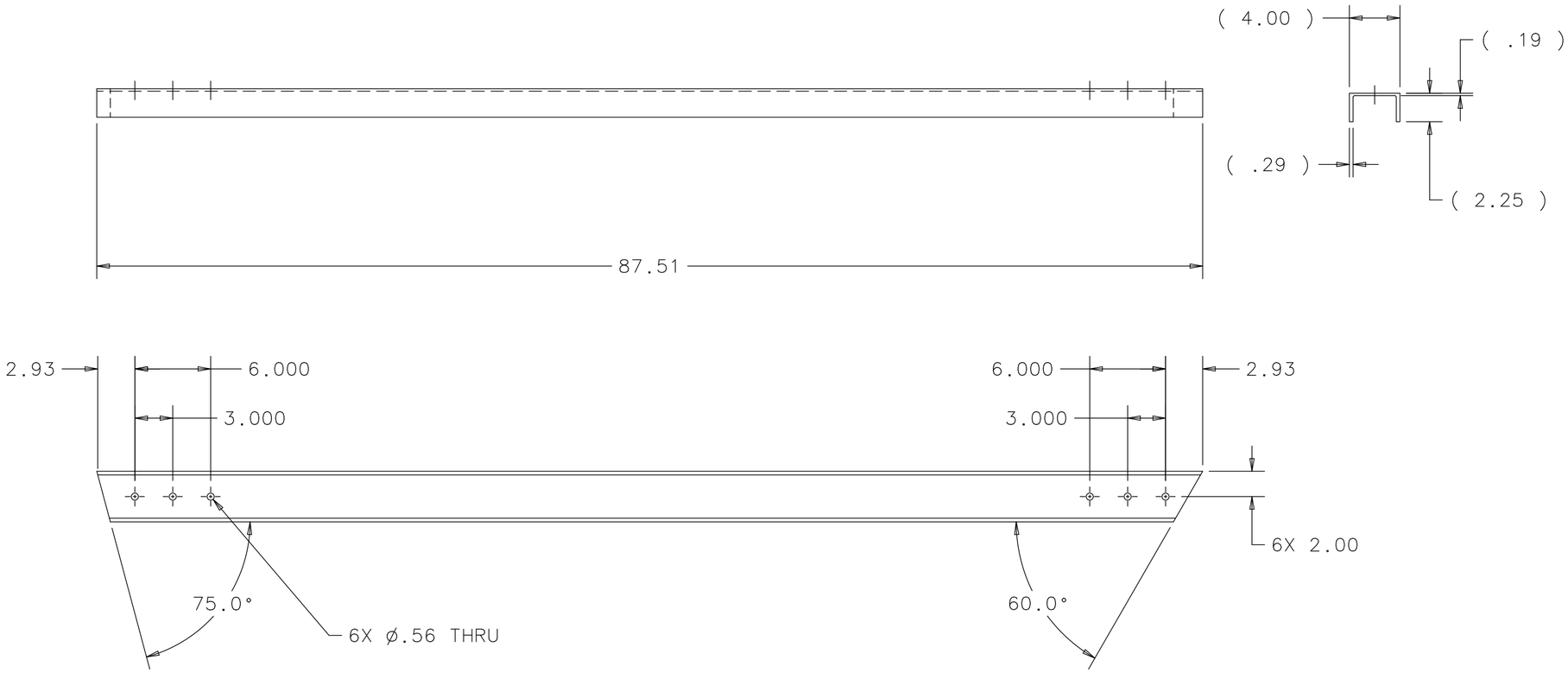

ITEM	PART NO.	DESCRIPTION OR SIZE	QTY.

PARTS LIST

UNLESS OTHERWISE SPECIFIED			ORIGINATOR	J.KILMER	25-JAN-2007
.XX	.XXX	ANGLES	DRAWN	G.SMITH	25-JAN-2007
± .06	± .015	± 1°	CHECKED	W.CYKO	23-MAY-2007
			APPROVED	J.KILMER	06-JUN-2007

1. BREAK ALL SHARP EDGES .015 MAX.
2. DO NOT SCALE DRAWING.
3. DIMENSIONS BASED UPON ASME Y14.5M-1994
4. MAX. ALL MACH. SURFACES 250
5. DRAWING UNITS: U.S. INCH

USED ON: MC-444414

MATERIAL: ALUMINUM CHANNEL-6061-T6 4 X .190

FERMI NATIONAL ACCELERATOR LABORATORY
UNITED STATES DEPARTMENT OF ENERGY

MINERVA-MECH-PLANE ANALYSIS HEAVY FRAME AND BRIDGE LADDER PLATFORM CHANNEL L.H.

SCALE	DRAWING NUMBER	SHEET	REV
1:8	3938.300-MC-444415	1 OF 1	

CREATED WITH : Ideas12NXSeries | GROUP: PPD/MECHANICAL DEPARTMENT

Created: 10:08:08 on 07-06-07 (D-M-Y) By: gsmith State: 1-INITIAL

REV	DESCRIPTION	DRAWN	DATE
		APPROVED	DATE

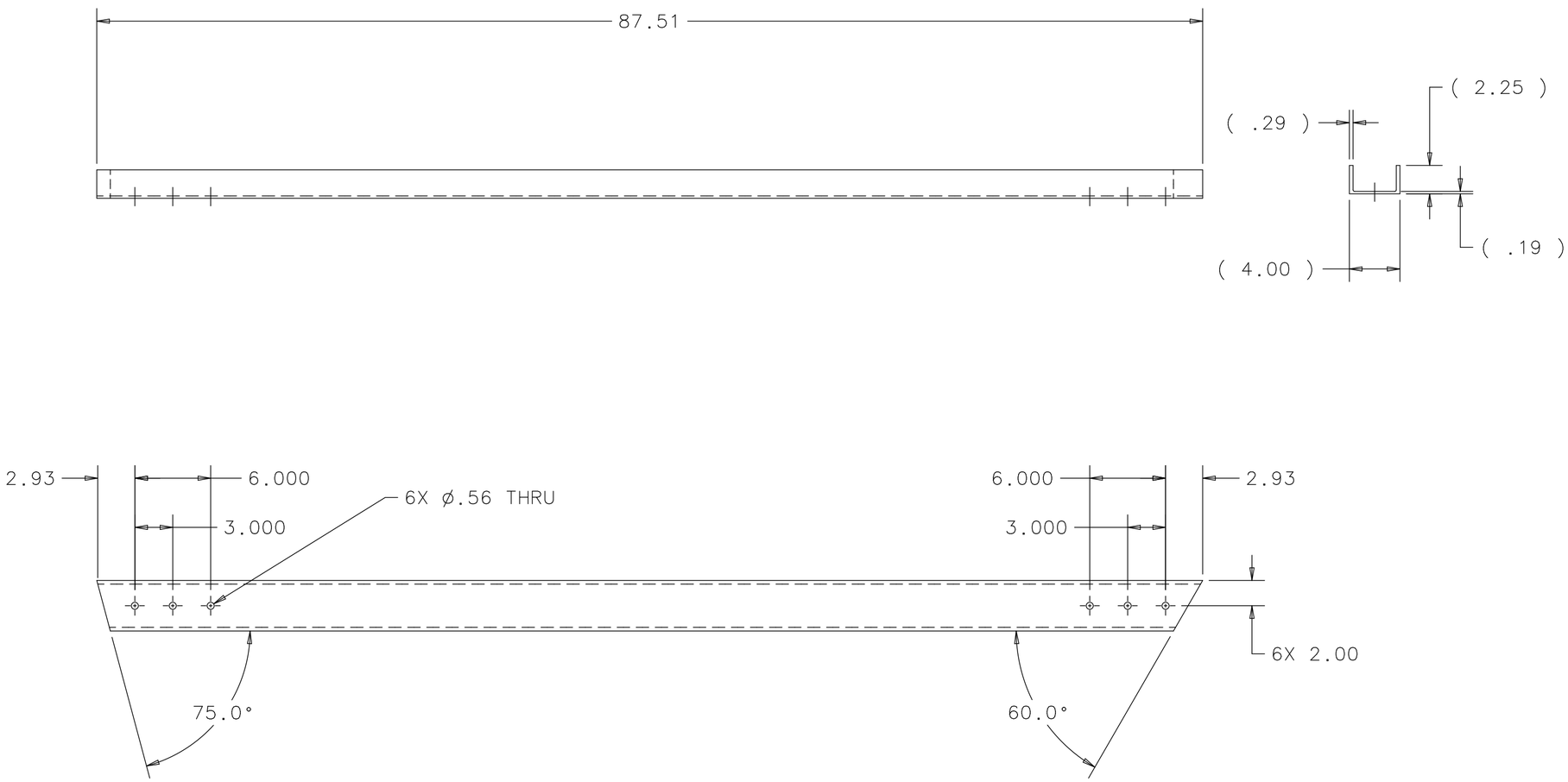

ITEM	PART NO.	DESCRIPTION OR SIZE	QTY.

PARTS LIST

UNLESS OTHERWISE SPECIFIED			ORIGINATOR	J.KILMER	25-JAN-2007
.XX	.XXX	ANGLES	DRAWN	G.SMITH	25-JAN-2007
± .06	± .015	± 1°	CHECKED	W.CYKO	23-MAY-2007
			APPROVED	J.KILMER	06-JUN-2007

1. BREAK ALL SHARP EDGES .015 MAX.
2. DO NOT SCALE DRAWING.
3. DIMENSIONS BASED UPON ASME Y14.5M-1994
4. MAX. ALL MACH. SURFACES 250
5. DRAWING UNITS: U.S. INCH

USED ON: MC-444414

MATERIAL: ALUMINUM CHANNEL-6061-T6 4 X .190

FERMI NATIONAL ACCELERATOR LABORATORY
UNITED STATES DEPARTMENT OF ENERGY

MINERVA-MECH-PLANE ANALYSIS HEAVY FRAME AND BRIDGE LADDER PLATFORM CHANNEL R.H.

SCALE	DRAWING NUMBER	SHEET	REV
1:8	3938.300-MC-444416	1 OF 1	

CREATED WITH : Ideas12NXSeries | GROUP: PPD/MECHANICAL DEPARTMENT

Created: 10:09:35 on 07-06-07 (D-M-Y) By: gsmith State: 1-INITIAL

REV	DESCRIPTION	DRAWN	DATE
		APPROVED	DATE

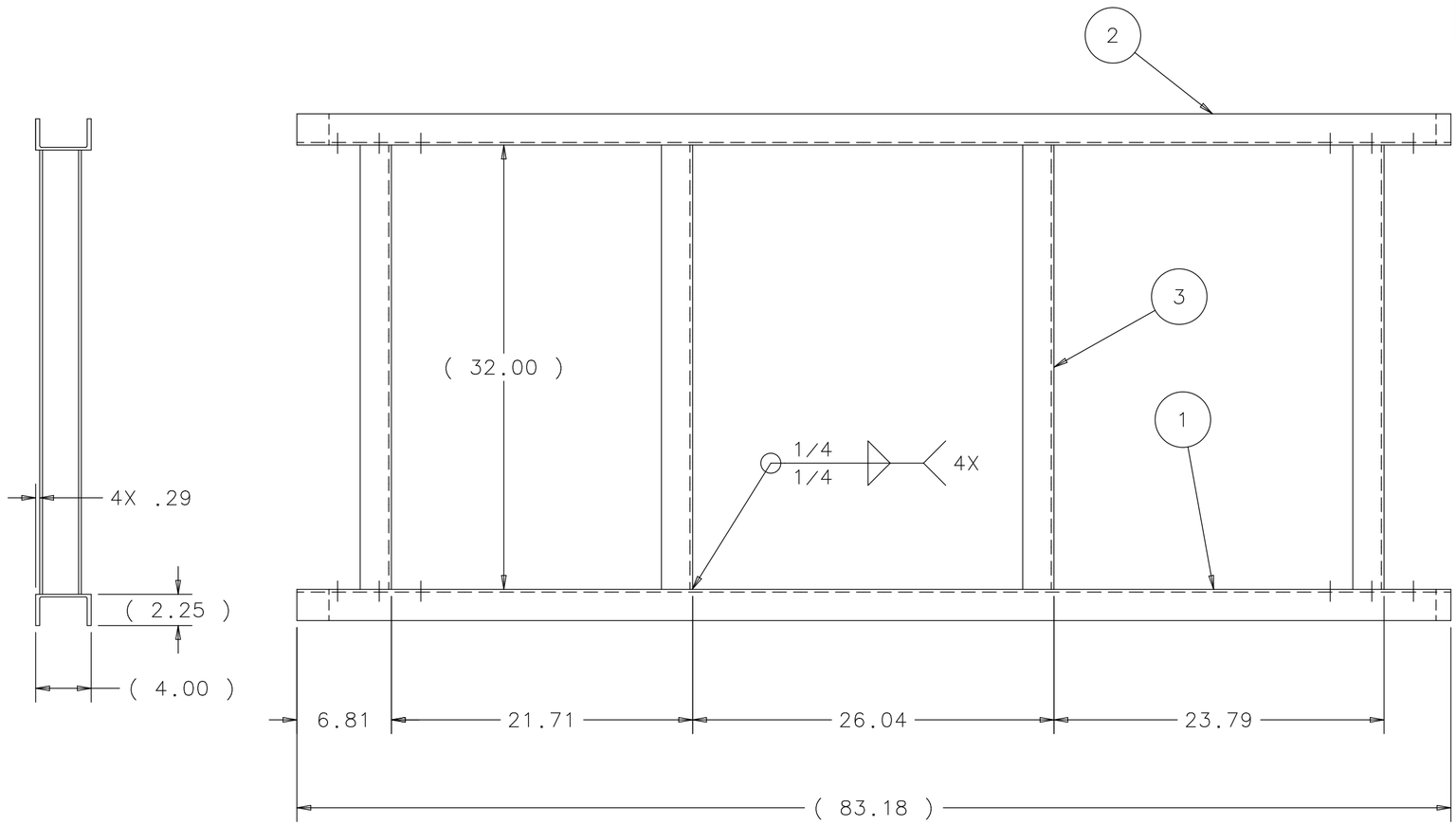

ITEM	PART NO.	DESCRIPTION OR SIZE	QTY.
3	COML	ALUMINUM CHANNEL-6061-T6 3 X .130 X 32.00 LG.	4
2	MC-444419	PLATFORM CHANNEL L.H.-L.H.	1
1	MC-444418	PLATFORM CHANNEL L.H.-R.H.	1

PARTS LIST

UNLESS OTHERWISE SPECIFIED					
.XX	.XXX	ANGLES	ORIGINATOR	J.KILMER	25-JAN-2007
± .06	± ---	± ---	DRAWN	G.SMITH	25-JAN-2007
			CHECKED	W.CYKO	23-MAY-2007
			APPROVED	J.KILMER	06-JUN-2007

1. BREAK ALL SHARP EDGES .015 MAX.
2. DO NOT SCALE DRAWING.
3. DIMENSIONS BASED UPON ASME Y14.5M-1994
4. MAX. ALL MACH. SURFACES 250
5. DRAWING UNITS: U.S. INCH

USED ON: ME-444399

MATERIAL: SEE PARTS LIST ABOVE

FERMI NATIONAL ACCELERATOR LABORATORY
UNITED STATES DEPARTMENT OF ENERGY

MINERVA-MECH-PLANE ANALYSIS HEAVY FRAME AND BRIDGE LADDER PLATFORM WELDMENT L.H.

SCALE	DRAWING NUMBER	SHEET	REV
1:8	3938.300-MC-444417	1 OF 1	

CREATED WITH : Ideas12NXSeries | GROUP: PPD/MECHANICAL DEPARTMENT

Created: 09:58:45 on 07-06-07 (D-M-Y) By: gsmith State: 1-INITIAL

REV	DESCRIPTION	DRAWN	DATE
		APPROVED	DATE

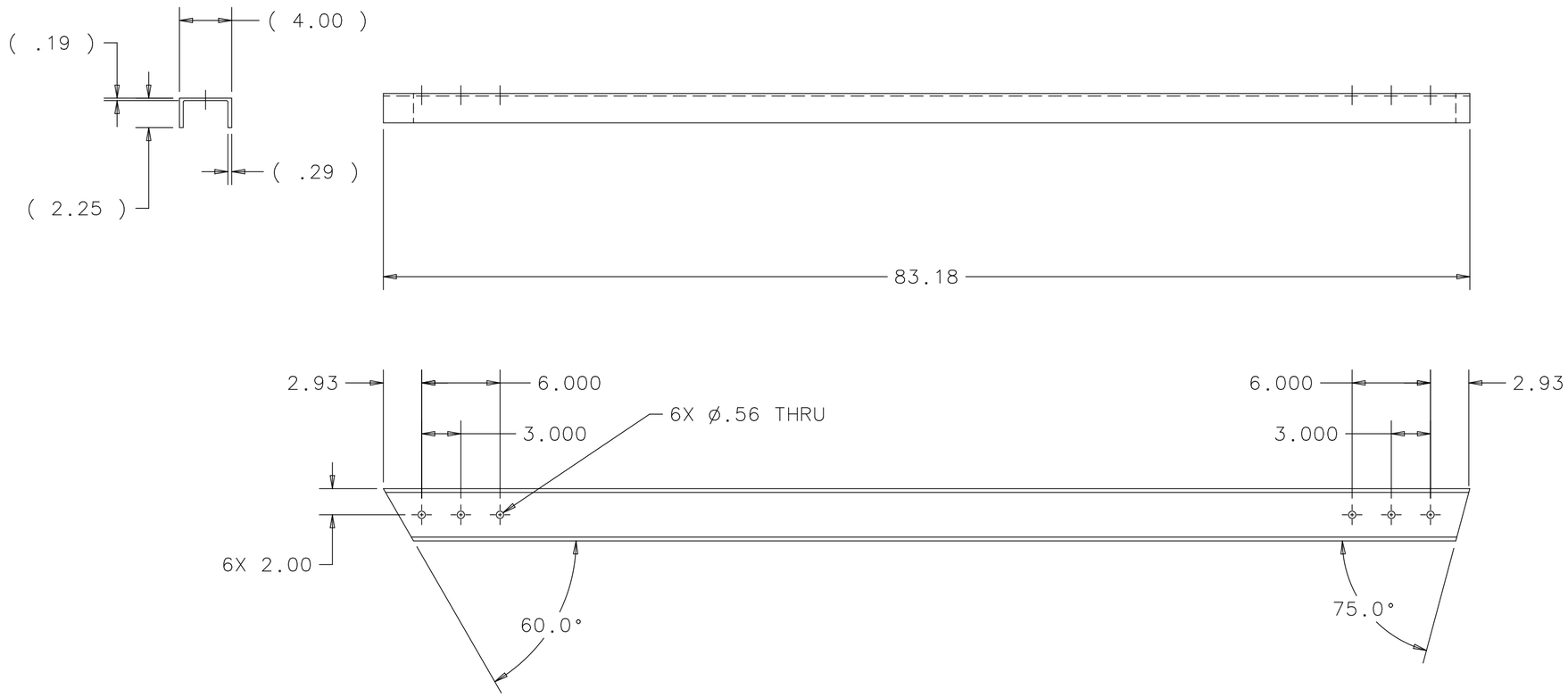

ITEM	PART NO.	DESCRIPTION OR SIZE	QTY.

PARTS LIST

UNLESS OTHERWISE SPECIFIED			ORIGINATOR	J.KILMER	25-JAN-2007
.XX	.XXX	ANGLES	DRAWN	G.SMITH	25-JAN-2007
± .06	± .015	± 1°	CHECKED	W.CYKO	23-MAY-2007
			APPROVED	J.KILMER	06-JUN-2007

1. BREAK ALL SHARP EDGES .015 MAX.
2. DO NOT SCALE DRAWING.
3. DIMENSIONS BASED UPON ASME Y14.5M-1994
4. MAX. ALL MACH. SURFACES 250
5. DRAWING UNITS: U.S. INCH

USED ON: MC-444417

MATERIAL: ALUMINUM CHANNEL-6061-T6 4 X .190

FERMI NATIONAL ACCELERATOR LABORATORY
UNITED STATES DEPARTMENT OF ENERGY

MINERVA-MECH-PLANE ANALYSIS HEAVY FRAME AND BRIDGE LADDER PLATFORM CHANNEL L.H.-R.H

SCALE	DRAWING NUMBER	SHEET	REV
1:8	3938.300-MC-444418	1 OF 1	

CREATED WITH : Ideas12NXSeries | GROUP: PPD/MECHANICAL DEPARTMENT

Created: 10:01:11 on 07-06-07 (D-M-Y) By: gsmith State: 1-INITIAL

REV	DESCRIPTION	DRAWN	DATE
		APPROVED	DATE

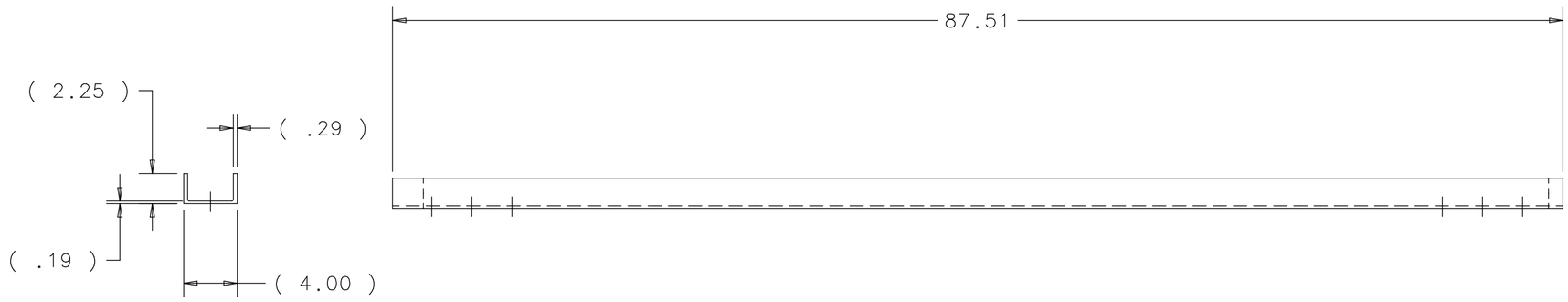

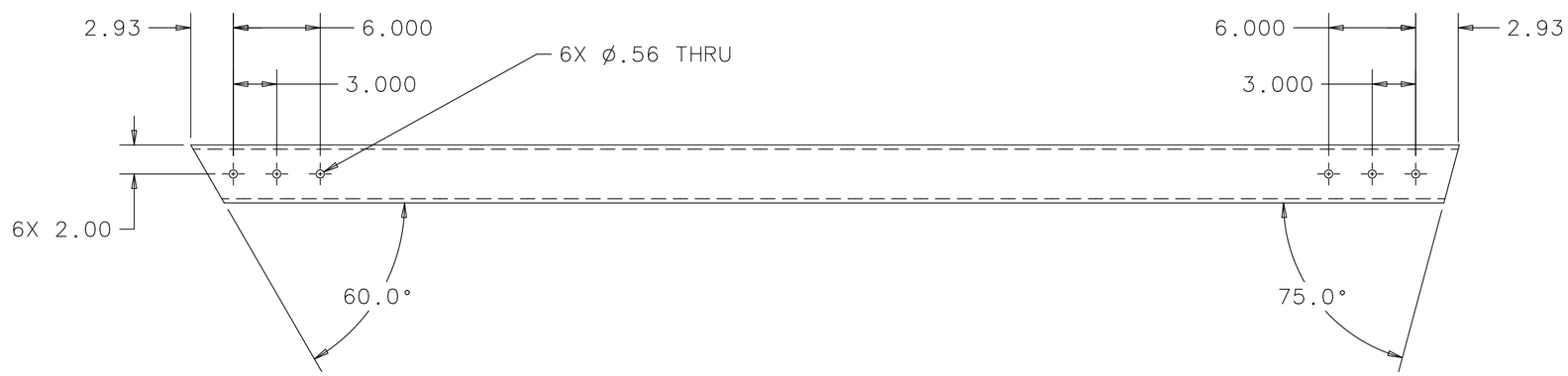

ITEM	PART NO.	DESCRIPTION OR SIZE	QTY.

PARTS LIST

UNLESS OTHERWISE SPECIFIED			ORIGINATOR	J.KILMER	25-JAN-2007
.XX	.XXX	ANGLES	DRAWN	G.SMITH	25-JAN-2007
± .06	± .015	± 1°	CHECKED	W.CYKO	23-MAY-2007
			APPROVED	J.KILMER	06-JUN-2007

1. BREAK ALL SHARP EDGES .015 MAX.
2. DO NOT SCALE DRAWING.
3. DIMENSIONS BASED UPON ASME Y14.5M-1994
4. MAX. ALL MACH. SURFACES 250
5. DRAWING UNITS: U.S. INCH

USED ON: MC-444417

MATERIAL: ALUMINUM CHANNEL-6061-T6 4 X .190

FERMI NATIONAL ACCELERATOR LABORATORY
UNITED STATES DEPARTMENT OF ENERGY

MINERVA-MECH-PLANE ANALYSIS HEAVY FRAME AND BRIDGE LADDER PLATFORM CHANNEL L.H.-L.H

SCALE	DRAWING NUMBER	SHEET	REV
1:8	3938.300-MC-444419	1 OF 1	

CREATED WITH : Ideas12NXSeries | GROUP: PPD/MECHANICAL DEPARTMENT

Created: 10:02:58 on 07-06-07 (D-M-Y) By: gsmith State: 1-INITIAL

REV	DESCRIPTION	DRAWN	DATE
		APPROVED	DATE

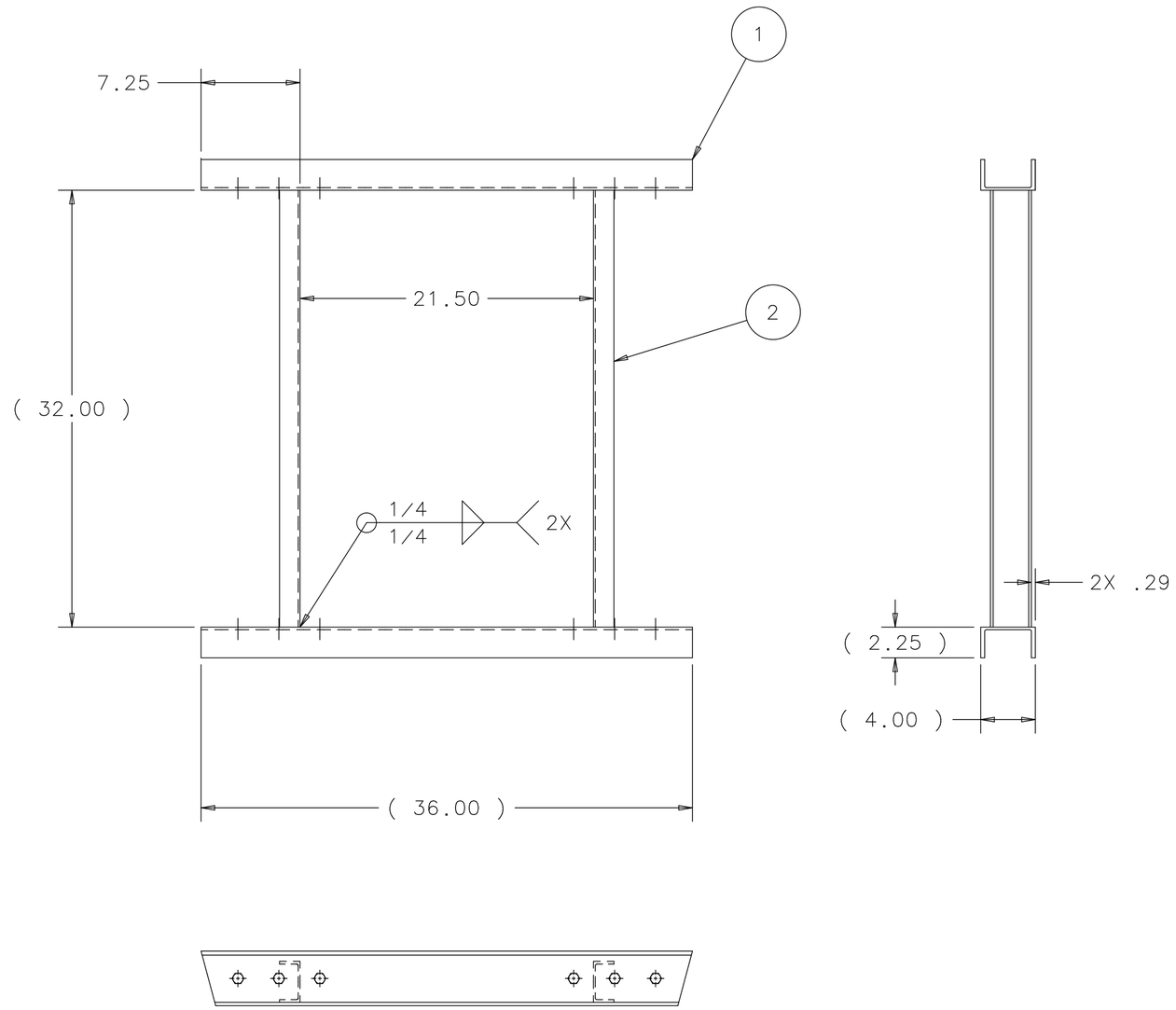

ITEM	PART NO.	DESCRIPTION OR SIZE	QTY.
2	COML	ALUMINUM CHANNEL-6061-T6 3 X .130 X 32.00 LG.	2
1	MC-444421	TOP PLATFORM CHANNEL	2

PARTS LIST

UNLESS OTHERWISE SPECIFIED			ORIGINATOR	J.KILMER	26-JAN-2007
.XX	.XXX	ANGLES	DRAWN	G.SMITH	26-JAN-2007
± .06	± ---	± ---	CHECKED	W.CYKO	23-MAY-2007
			APPROVED	J.KILMER	06-JUN-2007

1. BREAK ALL SHARP EDGES .015 MAX.
2. DO NOT SCALE DRAWING.
3. DIMENSIONS BASED UPON ASME Y14.5M-1994
4. MAX. ALL MACH. SURFACES 250
5. DRAWING UNITS: U.S. INCH

USED ON: ME-444399

MATERIAL: SEE PARTS LIST ABOVE

FERMI NATIONAL ACCELERATOR LABORATORY
UNITED STATES DEPARTMENT OF ENERGY

MINERVA-MECH-PLANE ANALYSIS HEAVY FRAME AND BRIDGE LADDER TOP PLATFORM WELDMENT

SCALE	DRAWING NUMBER	SHEET	REV
1:8	3938.300-MC-444420	1 OF 1	

CREATED WITH : Ideas12NXSeries | GROUP: PPD/MECHANICAL DEPARTMENT

Created: 10:04:04 on 07-06-07 (D-M-Y) By: gsmith State: 1-INITIAL

REV	DESCRIPTION	DRAWN	DATE
		APPROVED	DATE

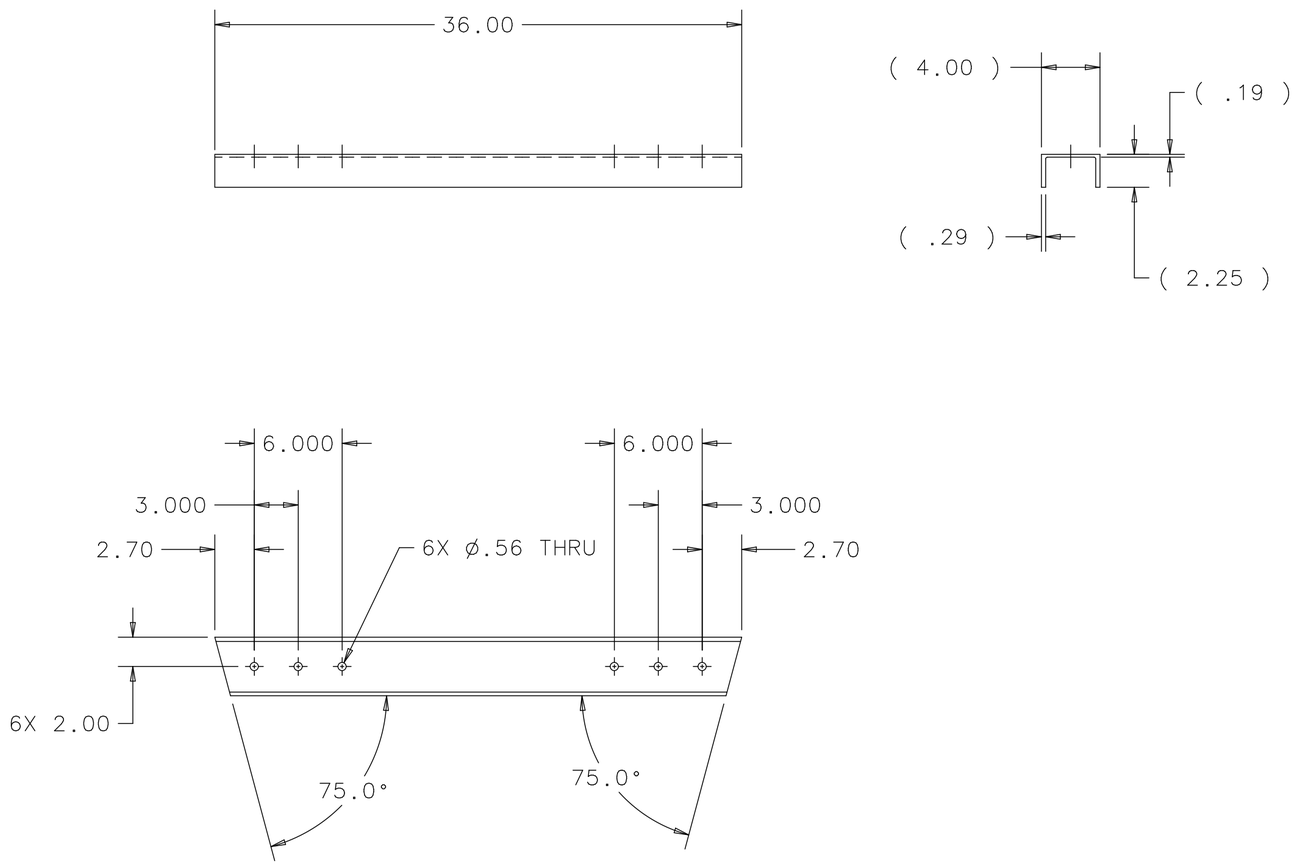

ITEM	PART NO.	DESCRIPTION OR SIZE	QTY.

PARTS LIST

UNLESS OTHERWISE SPECIFIED			ORIGINATOR	J.KILMER	26-JAN-2007
.XX	.XXX	ANGLES	DRAWN	G.SMITH	26-JAN-2007
± .06	± .015	± 1°	CHECKED	W.CYKO	23-MAY-2007
			APPROVED	J.KILMER	06-JUN-2007

1. BREAK ALL SHARP EDGES .015 MAX.
2. DO NOT SCALE DRAWING.
3. DIMENSIONS BASED UPON ASME Y14.5M-1994
4. MAX. ALL MACH. SURFACES 250
5. DRAWING UNITS: U.S. INCH

USED ON: MC-444420

MATERIAL: ALUMINUM CHANNEL-6061-T6 4 X .190

FERMI NATIONAL ACCELERATOR LABORATORY
UNITED STATES DEPARTMENT OF ENERGY

MINERVA-MECH-PLANE ANALYSIS HEAVY FRAME AND BRIDGE LADDER TOP PLATFORM CHANNEL

SCALE	DRAWING NUMBER	SHEET	REV
1:8	3938.300-MC-444421	1 OF 1	

CREATED WITH : Ideas12NXSeries | GROUP: PPD/MECHANICAL DEPARTMENT

REV	DESCRIPTION	DRAWN	DATE
		APPROVED	DATE

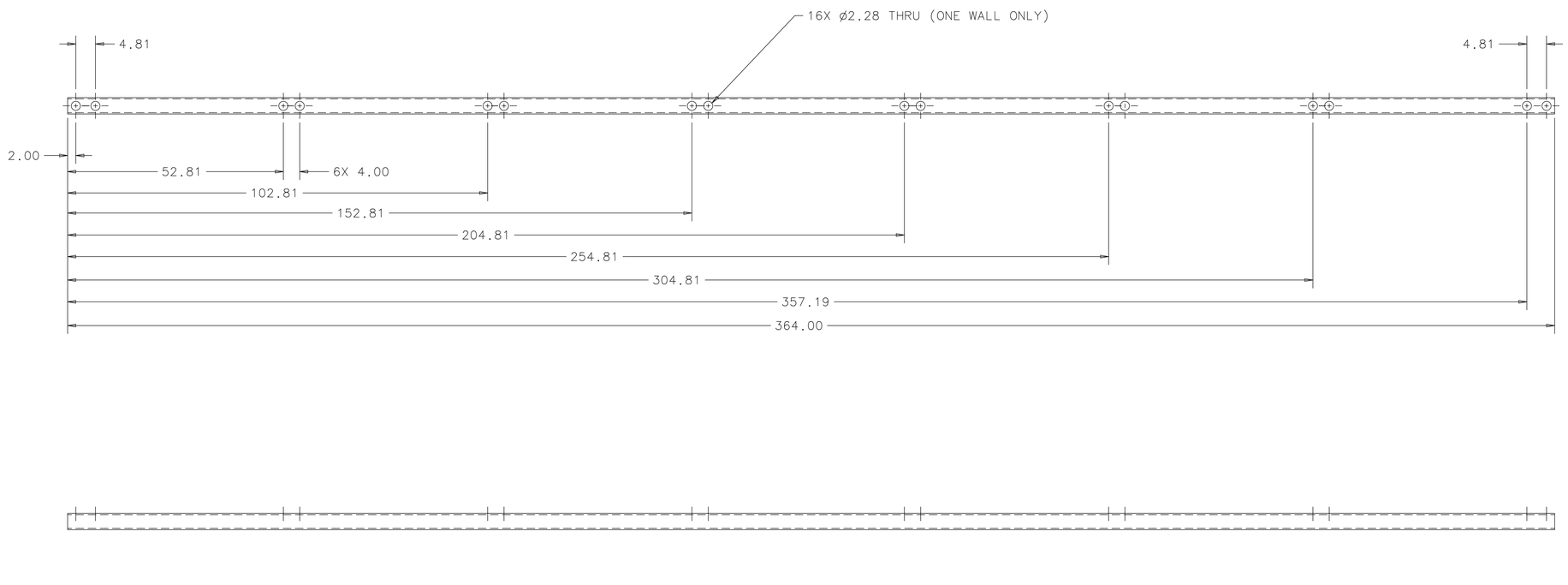

UNLESS OTHERWISE SPECIFIED			ORIGINATOR	W.CYKO	29-JAN-2007
.XX	.XXX	ANGLES	DRAWN	S.KINDELBERGER	29-JAN-2007
± .06	± ---	± ---	CHECKED	W.CYKO	23-MAY-2007
			APPROVED	J.KILMER	06-JUN-2007

1. BREAK ALL SHARP EDGES .015 MAX.
2. DO NOT SCALE DRAWING.
3. DIMENSIONS BASED UPON ASME Y14.5M-1994
4. MAX. ALL MACH. SURFACES √
5. DRAWING UNITS: U.S. INCH

USED ON: MD-444431

MATERIAL: SQUARE TUBING CARBON STEEL 4 X 4 X 5/16

FERMI NATIONAL ACCELERATOR LABORATORY
UNITED STATES DEPARTMENT OF ENERGY

MINERVA-MECH-PLANE ANALYSIS HEAVY FRAME AND BRIDGE PLATFORM LONG BEAM

SCALE	DRAWING NUMBER	SHEET	REV
1:16	3938.300-MD-444424	1 OF 1	

CREATED WITH : Ideas12NXSeries GROUP: PPD/MECHANICAL DEPARTMENT

Created: 08:49:33 on 08-06-07 (D-M-Y) By: gsmith State: 1-INITIAL

REV	DESCRIPTION	DRAWN	DATE
		APPROVED	DATE

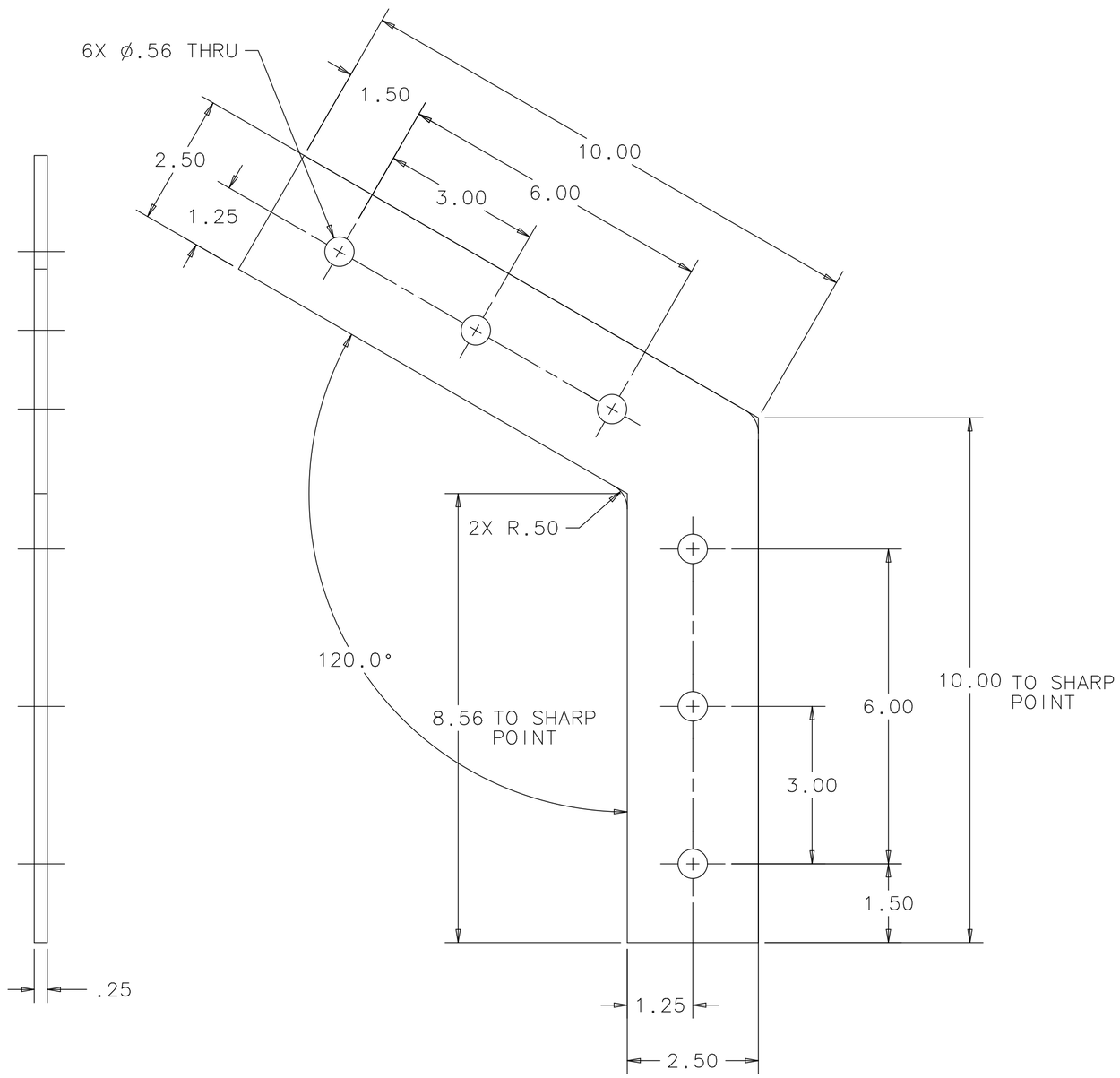

UNLESS OTHERWISE SPECIFIED			ORIGINATOR	J.KILMER	29-JAN-2007
.XX	.XXX	ANGLES	DRAWN	G.SMITH	29-JAN-2007
± .015	± ---	± .5°	CHECKED	W.CYKO	23-MAY-2007
			APPROVED	J.KILMER	06-JUN-2007

1. BREAK ALL SHARP EDGES .015 MAX.
2. DO NOT SCALE DRAWING.
3. DIMENSIONS BASED UPON ASME Y14.5M-1994
4. MAX. ALL MACH. SURFACES 125
5. DRAWING UNITS: U.S. INCH

USED ON: ME-444399

MATERIAL: ASTM-A36 STEEL

FERMI NATIONAL ACCELERATOR LABORATORY
UNITED STATES DEPARTMENT OF ENERGY

MINERVA-MECH-PLANE ANALYSIS HEAVY FRAME AND BRIDGE LADDER-STIFFENER PLATE LOWER

SCALE	DRAWING NUMBER	SHEET	REV
1:2	3938.300-MC-444428	1 OF 1	

CREATED WITH : Ideas12NXSeries | GROUP: PPD/MECHANICAL DEPARTMENT

Created: 08:09:48 on 08-06-07 (D-M-Y) By: gsmith State: 1-INITIAL

REV	DESCRIPTION	DRAWN	DATE
		APPROVED	DATE

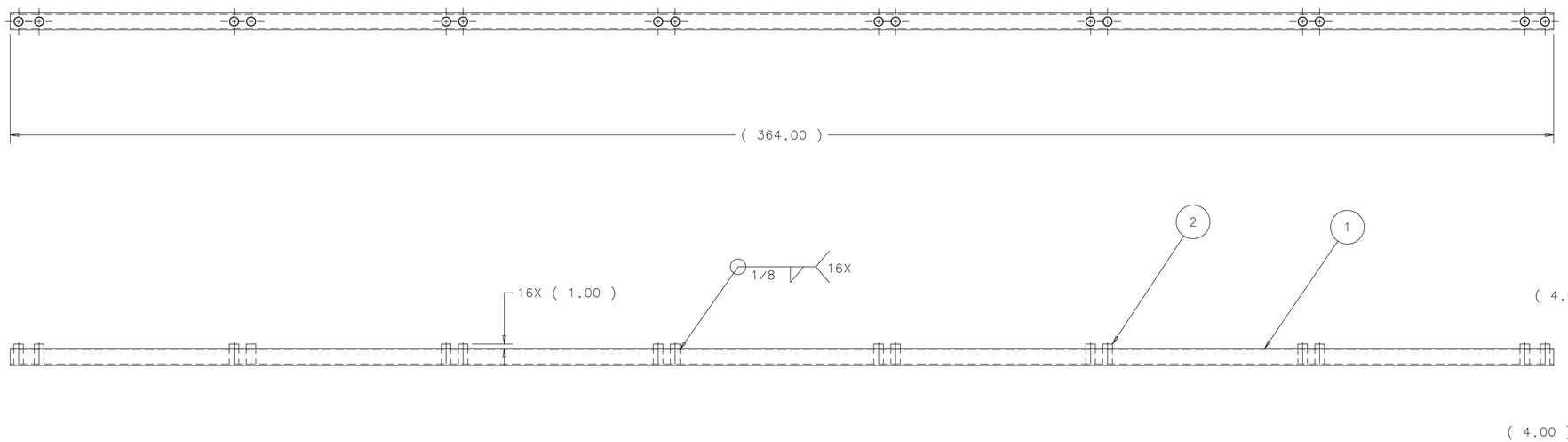

ITEM	PART NO.	DESCRIPTION OR SIZE	QTY.
2	MB-444432	PLATFORM RAIL SLEEVE	16
1	MD-444424	PLATFORM LONG BEAM	1

PARTS LIST

UNLESS OTHERWISE SPECIFIED					
.XX	.XXX	ANGLES	ORIGINATOR	W.CYKO	30-JAN-2007
± ---	± ---	± ---	DRAWN	S.KINDELBERGER	30-JAN-2007
			CHECKED	W.CYKO	23-MAY-2007
			APPROVED	J.KILMER	06-JUN-2007

1. BREAK ALL SHARP EDGES .015 MAX.
2. DO NOT SCALE DRAWING.
3. DIMENSIONS BASED UPON ASME Y14.5M-1994
4. MAX. ALL MACH. SURFACES 63
5. DRAWING UNITS: U.S. INCH

USED ON: MD-444397

MATERIAL: SEE PARTS LIST ABOVE

FERMI NATIONAL ACCELERATOR LABORATORY
UNITED STATES DEPARTMENT OF ENERGY

MINERVA-MECH-PLANE ANALYSIS HEAVY FRAME AND BRIDGE PLATFORM LONG BEAM WELDMENT

SCALE	DRAWING NUMBER	SHEET	REV
1/16=1	3938.300-MD-444431	1 OF 1	

CREATED WITH : Ideas12NXSeries | GROUP: PPD/MECHANICAL DEPARTMENT

Created: 08:50:52 on 08-06-07 (D-M-Y) By: gsmith State: 1-INITIAL

REV	DESCRIPTION	DRAWN	DATE
		APPROVED	DATE

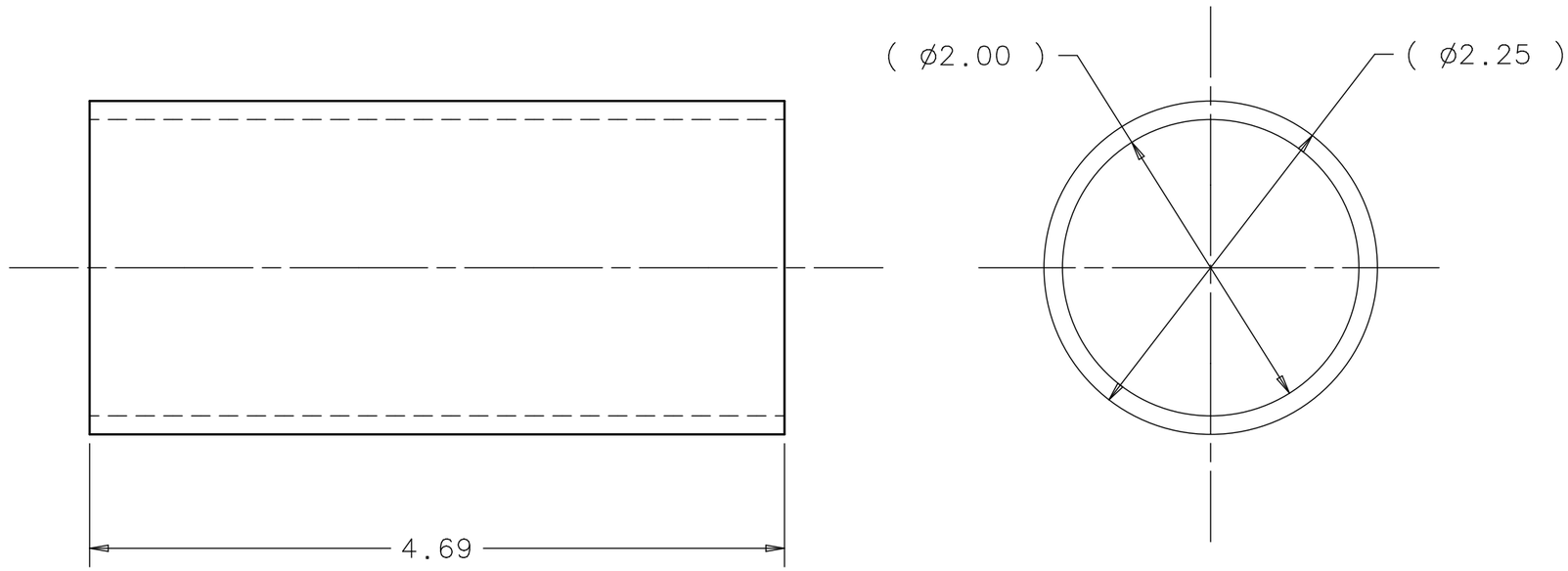

UNLESS OTHERWISE SPECIFIED			ORIGINATOR	W.CYKO	30-JAN-2007
.XX	.XXX	ANGLES	DRAWN	S.KINDELBERGER	30-JAN-2007
± .06	± ---	± ---	CHECKED	W.CYKO	23-MAY-2007
			APPROVED	J.KILMER	06-JUN-2007

1. BREAK ALL SHARP EDGES .015 MAX.
2. DO NOT SCALE DRAWING.
3. DIMENSIONS BASED UPON ASME Y14.5M-1994
4. MAX. ALL MACH. SURFACES 125
5. DRAWING UNITS: U.S. INCH

USED ON
MC-444447
MD-444431

MATERIAL
CARBON STEEL TUBING
2 1/4 O.D. x 1/8 WALL

FERMI NATIONAL ACCELERATOR LABORATORY
UNITED STATES DEPARTMENT OF ENERGY

MINERVA-MECH-PLANE ANALYSIS HEAVY FRAME AND BRIDGE PLATFORM RAIL SLEEVE

SCALE	DRAWING NUMBER	SHEET	REV
1:1	3938.300-MB-444432	1 OF 1	

CREATED WITH : Ideas12NXSeries | GROUP: PPD/MECHANICAL DEPARTMENT

Created: 08:38:21 on 07-06-07 (D-M-Y) By: gsmith State: 1-INITIAL

REV	DESCRIPTION	DRAWN	DATE
		APPROVED	DATE

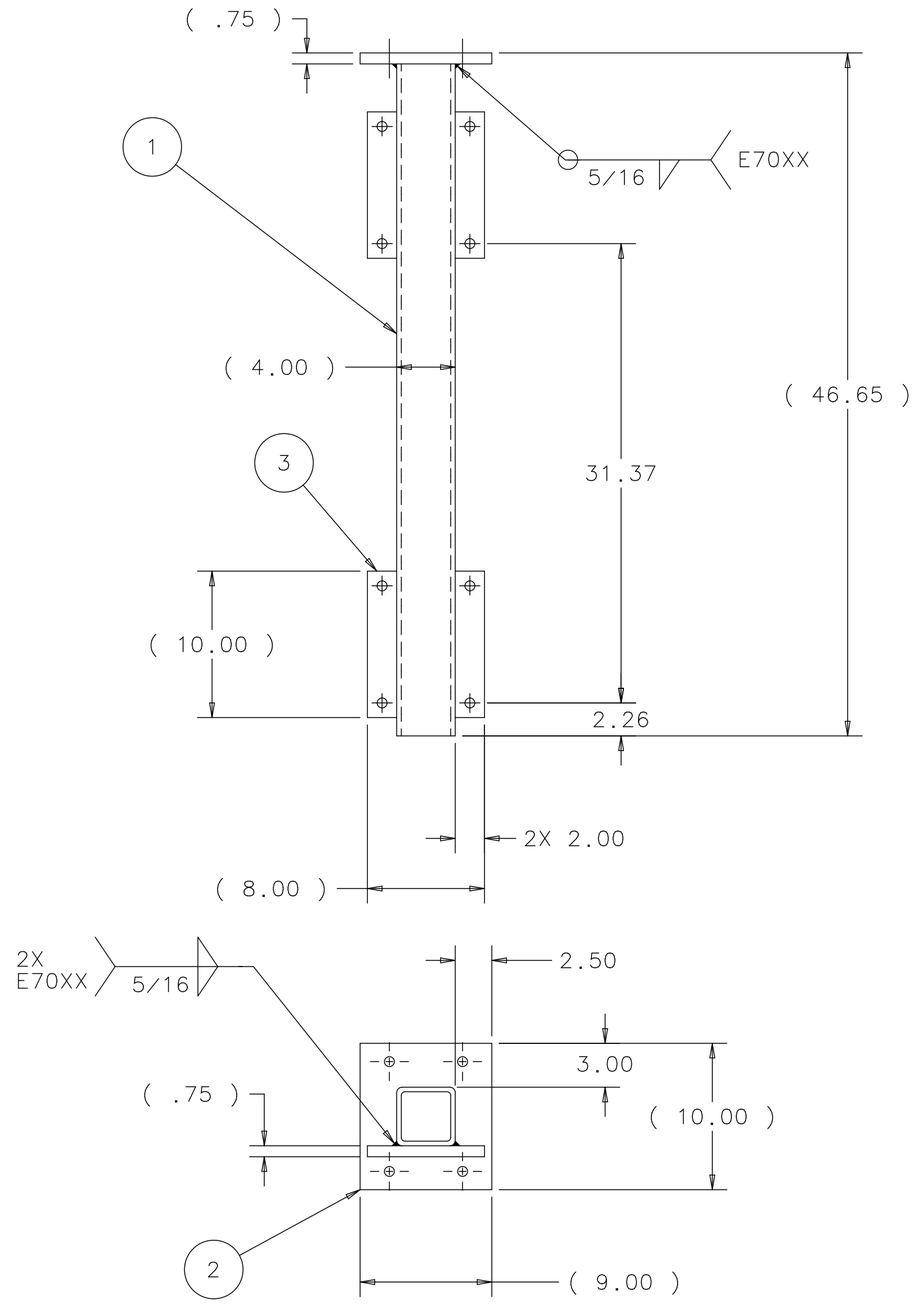

ITEM	PART NO.	DESCRIPTION OR SIZE	QTY.
3	MB-444364	TOP PLATE	2
2	MB-444438	CENTER BEAM FOOT	1
1	MB-444440	PLATFORM CENTER BEAM	1

PARTS LIST

UNLESS OTHERWISE SPECIFIED					
.XX	.XXX	ANGLES	ORIGINATOR	W.CYKO	31-JAN-2007
± .06	± ---	± ---	DRAWN	S.KINDELBERGER	31-JAN-2007
			CHECKED	W.CYKO	23-MAY-2007
			APPROVED	J.KILMER	

1. BREAK ALL SHARP EDGES .015 MAX.
2. DO NOT SCALE DRAWING.
3. DIMENSIONS BASED UPON ASME Y14.5M-1994
4. MAX. ALL MACH. SURFACES ---√
5. DRAWING UNITS: U.S.INCH

USED ON: MD-444397

MATERIAL: SEE PARTS LIST ABOVE

FERMI NATIONAL ACCELERATOR LABORATORY
UNITED STATES DEPARTMENT OF ENERGY

MINERVA-MECH-PLANE ANALYSIS HEAVY FRAME AND BRIDGE CENTER BEAM WELDMENT

SCALE	DRAWING NUMBER	SHEET	REV
1:8	3938.300-MC-444435	1 OF 1	

CREATED WITH : Ideas12NXSeries | GROUP: PPD/MECHANICAL DEPARTMENT

Created: 08:19:36 on 08-06-07 (D-M-Y) By: gsmith State: 1-INITIAL

REV	DESCRIPTION	DRAWN	DATE
		APPROVED	DATE

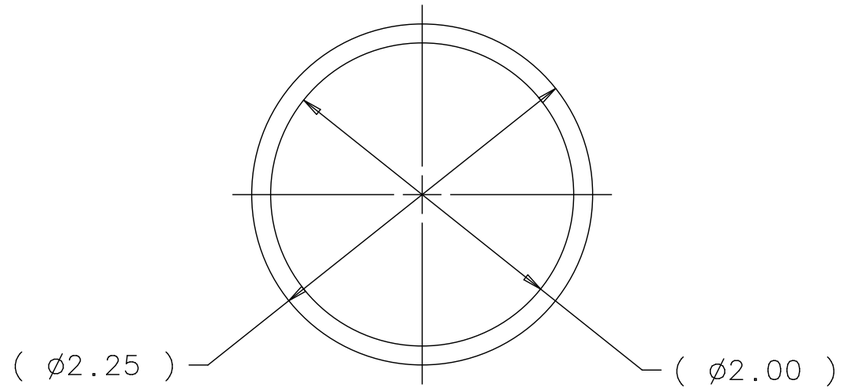

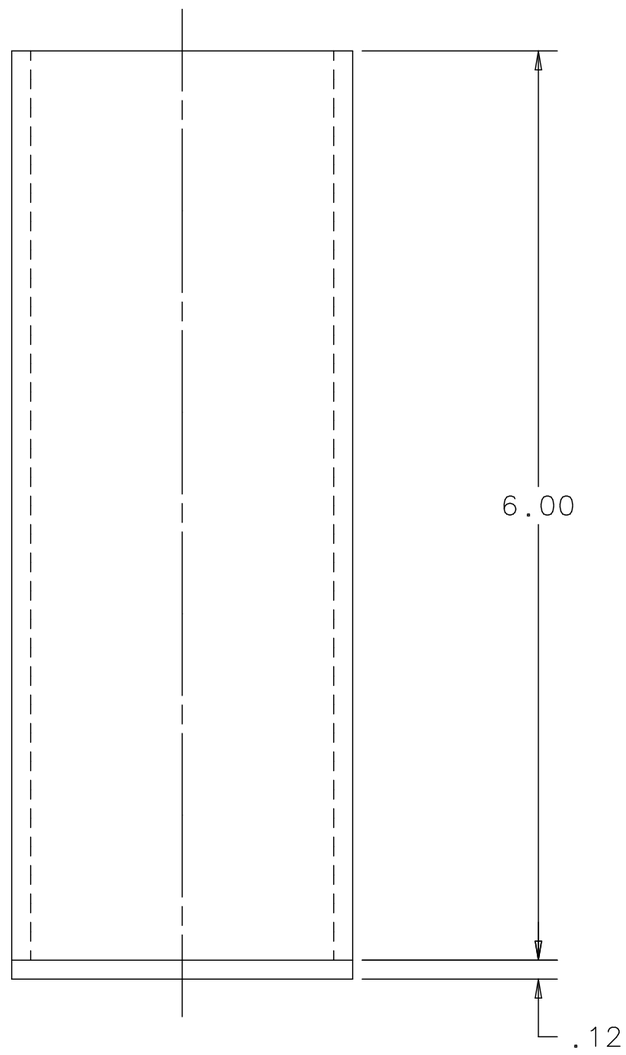

UNLESS OTHERWISE SPECIFIED		
.XX	.XXX	ANGLES
± .06	± ---	± ---

1. BREAK ALL SHARP EDGES .015 MAX.
2. DO NOT SCALE DRAWING.
3. DIMENSIONS BASED UPON ASME Y14.5M-1994
4. MAX. ALL MACH. SURFACES 125
5. DRAWING UNITS: U.S. INCH

ORIGINATOR	J.KILMER	31-JAN-2007
DRAWN	G.SMITH	31-JAN-2007
CHECKED	W.CYKO	23-MAY-2007
APPROVED	J.KILMER	06-JUN-2007

USED ON: ME-444399

MATERIAL: ALUMINUM ROUND TUBING-6061-T6 2 1/4 O.D. X .12 WALL

FERMI NATIONAL ACCELERATOR LABORATORY
UNITED STATES DEPARTMENT OF ENERGY

MINERVA-MECH-PLANE ANALYSIS HEAVY FRAME AND BRIDGE LADDER-RAILING HOLDER (LONG)

SCALE	DRAWING NUMBER	SHEET	REV
1:1	3938.300-MB-444436	1 OF 1	

CREATED WITH : Ideas12NXSeries | GROUP: PPD/MECHANICAL DEPARTMENT

Created: 08:43:58 on 07-06-07 (D-M-Y) By: gsmith State: 1-INITIAL

REV	DESCRIPTION	DRAWN	DATE
		APPROVED	DATE

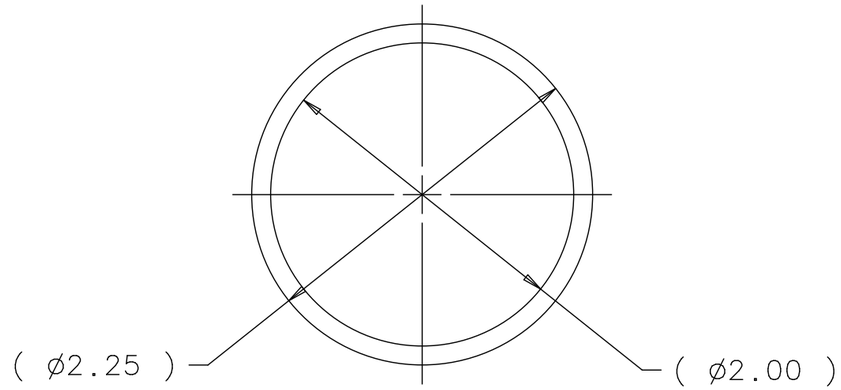

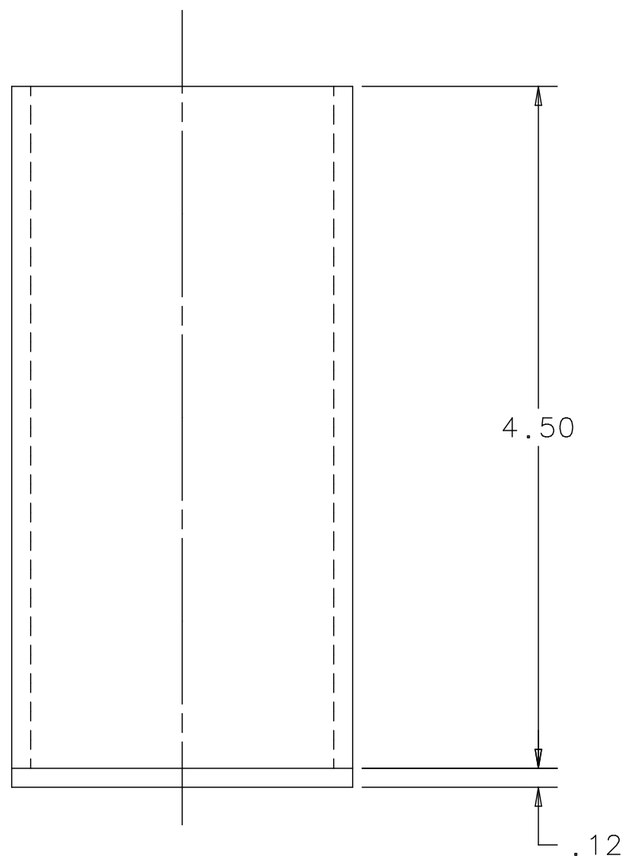

UNLESS OTHERWISE SPECIFIED			ORIGINATOR	J.KILMER	31-JAN-2007
.XX	.XXX	ANGLES	DRAWN	G.SMITH	31-JAN-2007
± .06	± ---	± ---	CHECKED	W.CYKO	23-MAY-2007
			APPROVED	J.KILMER	06-JUN-2007

1. BREAK ALL SHARP EDGES .015 MAX.
2. DO NOT SCALE DRAWING.
3. DIMENSIONS BASED UPON ASME Y14.5M-1994
4. MAX. ALL MACH. SURFACES 125
5. DRAWING UNITS: U.S. INCH

USED ON: ME-444399

MATERIAL: ALUMINUM ROUND TUBING-6061-T6 2 1/4 O.D. X .12 WALL

FERMI NATIONAL ACCELERATOR LABORATORY
UNITED STATES DEPARTMENT OF ENERGY

MINERVA-MECH-PLANE ANALYSIS HEAVY FRAME AND BRIDGE LADDER-RAILING HOLDER (SHORT)

SCALE	DRAWING NUMBER	SHEET	REV
1:1	3938.300-MB-444437	1 OF 1	

CREATED WITH : Ideas12NXSeries | GROUP: PPD/MECHANICAL DEPARTMENT

Created: 08:23:52 on 07-06-07 (D-M-Y) By: gsmith State: 1-INITIAL

REV	DESCRIPTION	DRAWN	DATE
		APPROVED	DATE

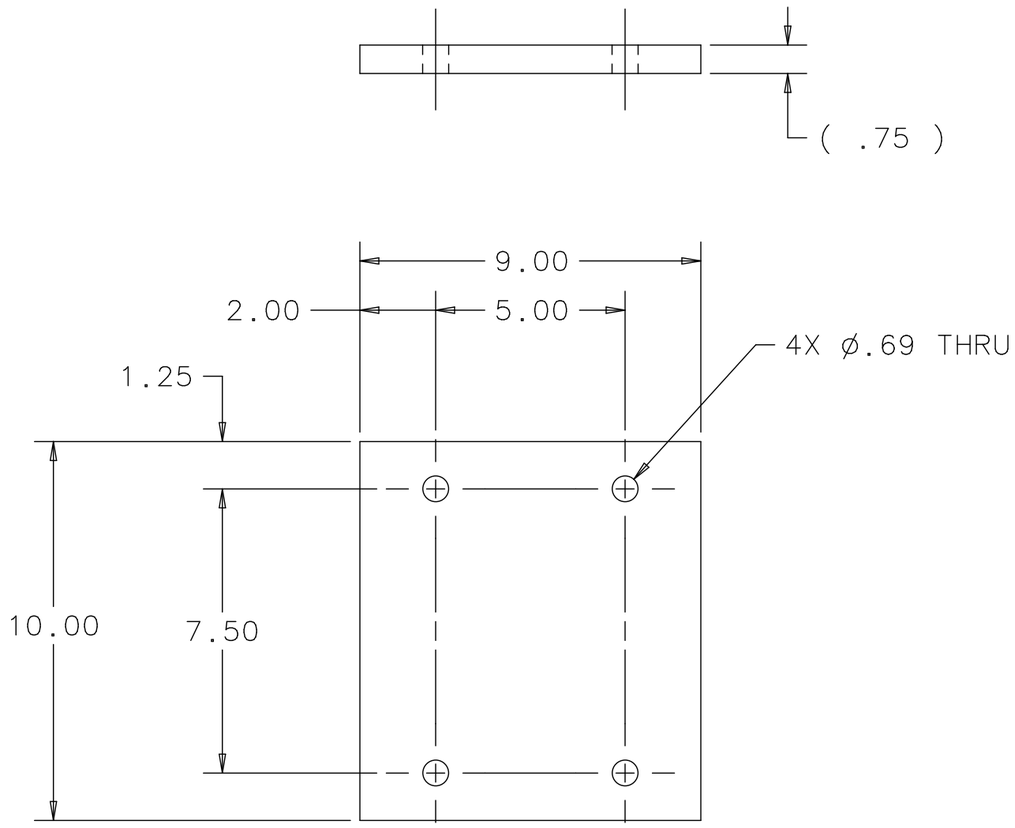

UNLESS OTHERWISE SPECIFIED			ORIGINATOR	W.CYKO	31-JAN-2007
.XX	.XXX	ANGLES	DRAWN	S.KINDELBERGER	31-JAN-2007
± .03	± ---	± ---	CHECKED	W.CYKO	23-MAY-2007
			APPROVED	J.KILMER	06-JUN-2007

1. BREAK ALL SHARP EDGES .015 MAX.
2. DO NOT SCALE DRAWING.
3. DIMENSIONS BASED UPON ASME Y14.5M-1994
4. MAX. ALL MACH. SURFACES 125
5. DRAWING UNITS: U.S. INCH

USED ON: MD-444435 , MC-444447

MATERIAL: PLATE 3/4 THICK CARBON STEEL A36

FERMI NATIONAL ACCELERATOR LABORATORY
UNITED STATES DEPARTMENT OF ENERGY

MINERVA-MECH-PLANE ANALYSIS HEAVY FRAME AND BRIDGE CENTER BEAM FOOT

SCALE	DRAWING NUMBER	SHEET	REV
1:4	3938.300-MB-444438	1 OF 1	

CREATED WITH : Ideas12NXSeries GROUP: PPD/MECHANICAL DEPARTMENT

Created: 08:48:29 on 07-06-07 (D-M-Y) By: gsmith State: 1-INITIAL

REV	DESCRIPTION	DRAWN	DATE
		APPROVED	DATE

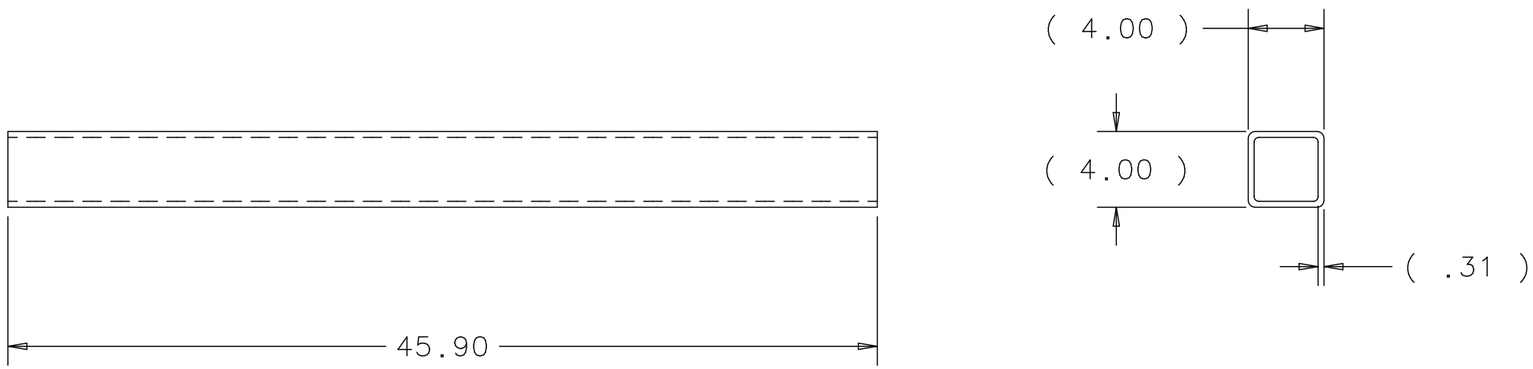

UNLESS OTHERWISE SPECIFIED			ORIGINATOR	W.CYKO	01-FEB-2007
.XX	.XXX	ANGLES	DRAWN	S.KINDELBERGER	01-FEB-2007
± .03	± ---	± ---	CHECKED	W.CYKO	23-MAY-2007
1. BREAK ALL SHARP EDGES .015 MAX. 2. DO NOT SCALE DRAWING. 3. DIMENSIONS BASED UPON ASME Y14.5M-1994 4. MAX. ALL MACH. SURFACES 250 5. DRAWING UNITS: U.S. INCH			APPROVED	J.KILMER	06-JUN-2007
			USED ON	MC-444435	
			MATERIAL	STRUCTURAL TUBING 4 X 4 X 5/16 WALL CARBON STEEL A500 GR. B	

FERMI NATIONAL ACCELERATOR LABORATORY
UNITED STATES DEPARTMENT OF ENERGY

MINERVA-MECH-PLANE ANALYSIS HEAVY FRAME AND BRIDGE PLATFORM CENTER BEAM

SCALE	DRAWING NUMBER	SHEET	REV
1:8	3938.300-MB-444440	1 OF 1	

CREATED WITH : Ideas12NXSeries | GROUP: PPD/MECHANICAL DEPARTMENT

Created: 08:52:38 on 07-06-07 (D-M-Y) By: gsmith State: 1-INITIAL

REV	DESCRIPTION	DRAWN	DATE
		APPROVED	DATE

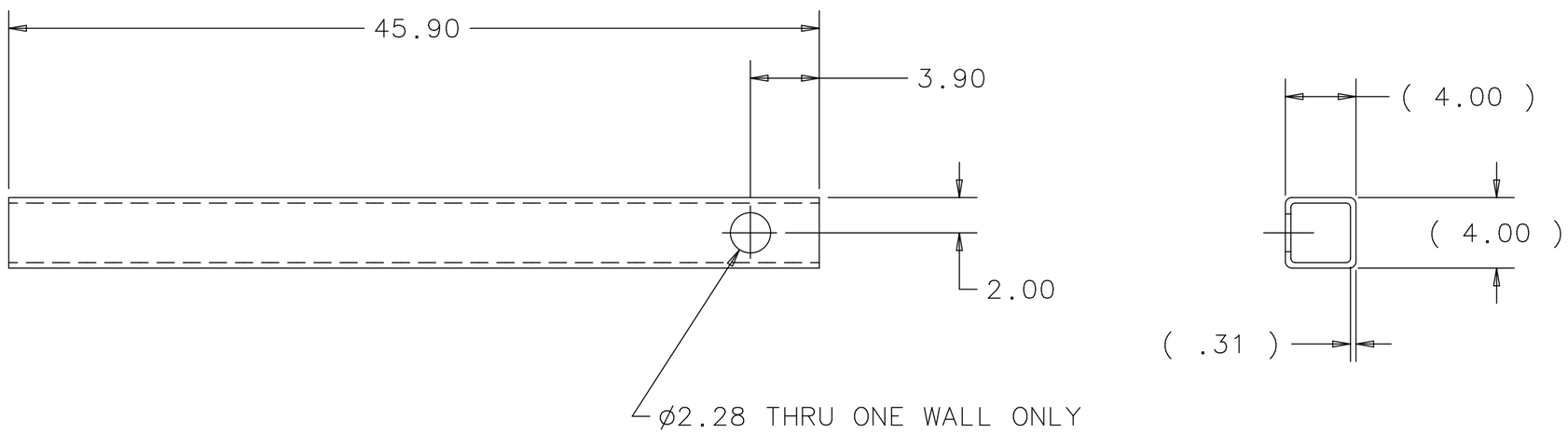

UNLESS OTHERWISE SPECIFIED			ORIGINATOR	W.CYKO	01-FEB-2007
.XX	.XXX	ANGLES	DRAWN	S.KINDELBERGER	01-FEB-2007
± .03	± ---	± ---	CHECKED	W.CYKO	23-MAY-2007
			APPROVED	J.KILMER	06-JUN-2007

1. BREAK ALL SHARP EDGES .015 MAX.
2. DO NOT SCALE DRAWING.
3. DIMENSIONS BASED UPON ASME Y14.5M-1994
4. MAX. ALL MACH. SURFACES 125
5. DRAWING UNITS: U.S. INCH

USED ON: MC-444447

MATERIAL: STRUCTURAL TUBING 4 x 4 x 5/16 CARBON STEEL A500 GR. B

FERMI NATIONAL ACCELERATOR LABORATORY
UNITED STATES DEPARTMENT OF ENERGY

MINERVA-MECH-PLANE ANALYSIS HEAVY FRAME AND BRIDGE PLATFORM END BEAM

SCALE	DRAWING NUMBER	SHEET	REV
1:8	3938.300-MB-444441	1 OF 1	

CREATED WITH : Ideas12NXSeries | GROUP: PPD/MECHANICAL DEPARTMENT

Created: 09:30:46 on 07-06-07 (D-M-Y) By: gsmith State: 3-RELEASED

REV	DESCRIPTION	DRAWN	DATE
		APPROVED	DATE

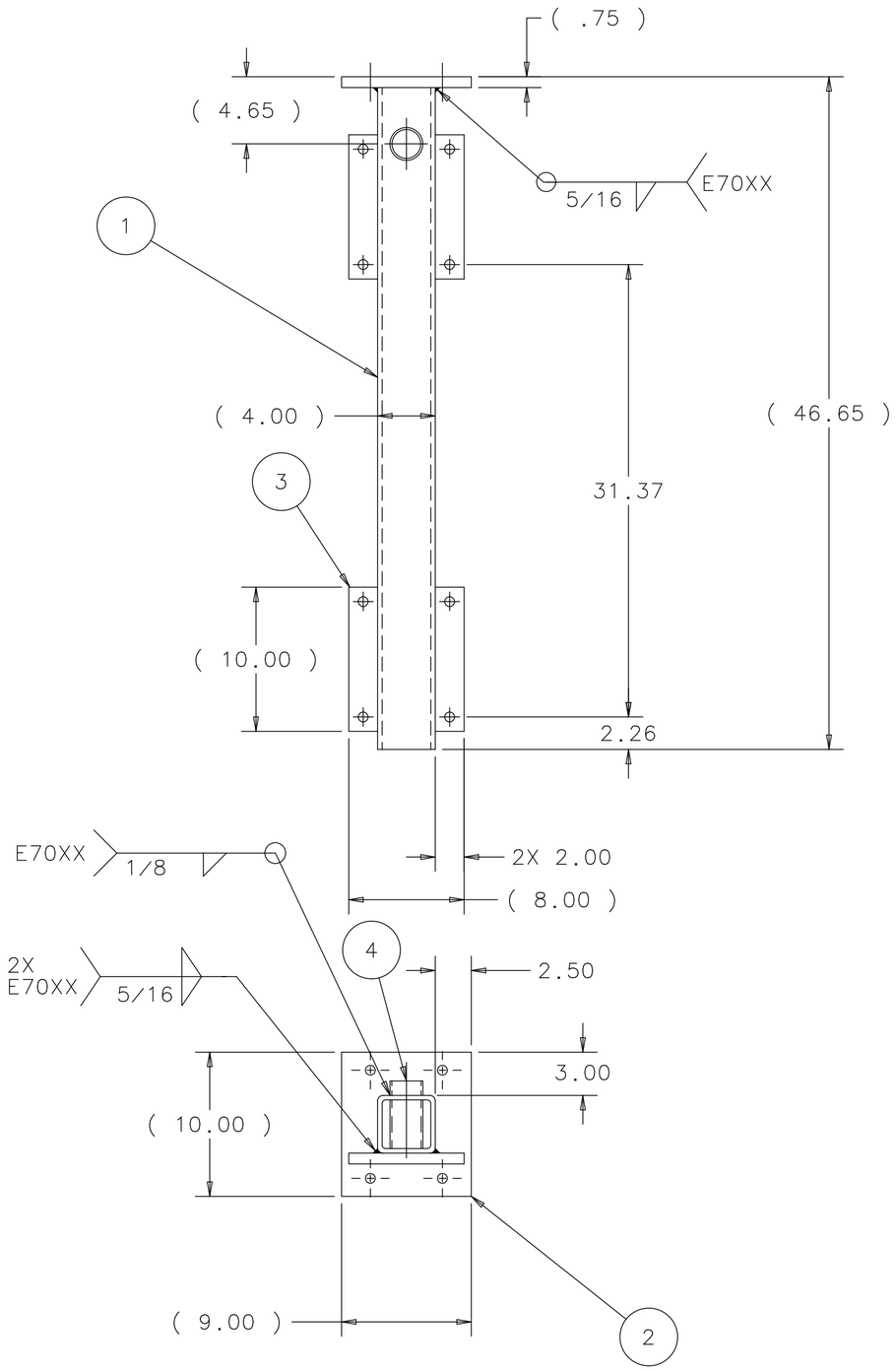

ITEM	PART NO.	DESCRIPTION OR SIZE	QTY.
4	MB-444432	PLATFORM RAIL SLEEVE	1
3	MB-444364	TOP PLATE	2
2	MB-444438	CENTER BEAM FOOT	1
1	MB-444441	PLATFORM END BEAM	1

PARTS LIST

UNLESS OTHERWISE SPECIFIED					
.XX	.XXX	ANGLES	ORIGINATOR	W.CYKO	01-FEB-2007
± .06	± ---	± ---	DRAWN	S.KINDELBERGER	01-FEB-2007
			CHECKED	W.CYKO	23-MAY-2007
			APPROVED	J.KILMER	06-JUN-2007

1. BREAK ALL SHARP EDGES .015 MAX.
2. DO NOT SCALE DRAWING.
3. DIMENSIONS BASED UPON ASME Y14.5M-1994
4. MAX. ALL MACH. SURFACES ---√
5. DRAWING UNITS: U.S. INCH

USED ON: MD-444397

MATERIAL: SEE PARTS LIST ABOVE

FERMI NATIONAL ACCELERATOR LABORATORY
UNITED STATES DEPARTMENT OF ENERGY

MINERVA-MECH-PLANE ANALYSIS HEAVY FRAME AND BRIDGE END BEAM WELDMENT

SCALE	DRAWING NUMBER	SHEET	REV
1:8	3938.300-MC-444447	1 OF 1	

CREATED WITH : Ideas12NXSeries | GROUP: PPD/MECHANICAL DEPARTMENT

Created: 08:21:17 on 08-06-07 (D-M-Y) By: gsmith State: 1-INITIAL

REV	DESCRIPTION	DRAWN	DATE
		APPROVED	DATE

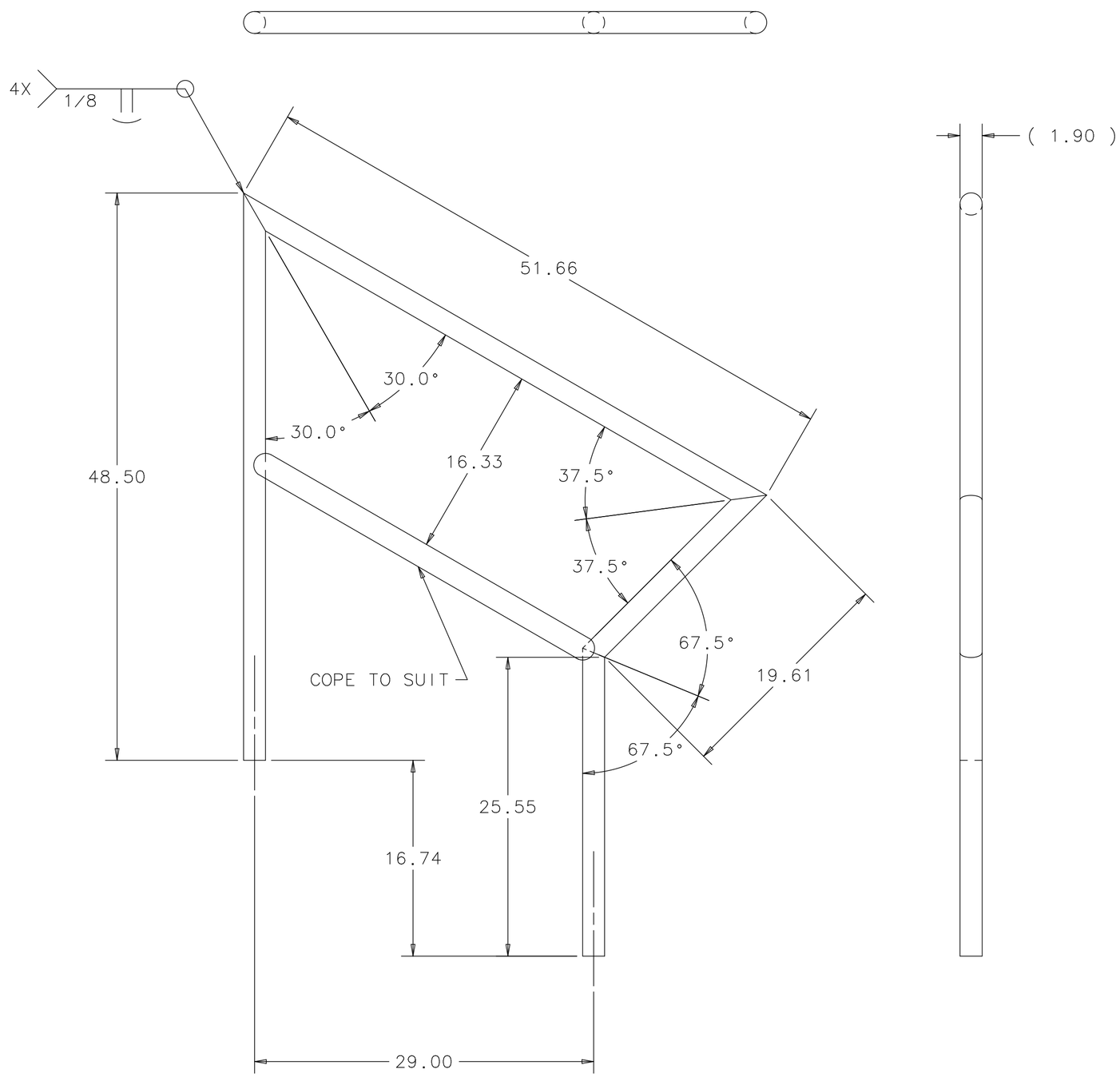

NOTE ;
COPE TO FIT ALL WELD JOINTS.

ITEM	PART NO.	DESCRIPTION OR SIZE	QTY.

PARTS LIST

UNLESS OTHERWISE SPECIFIED			ORIGINATOR	J.KILMER	24-JAN-2007
.XX	.XXX	ANGLES	DRAWN	G.SMITH	24-JAN-2007
± .06	± ---	± 1°	CHECKED	W.CYKO	23-MAY-2007
			APPROVED	J.KILMER	06-JUN-2007

1. BREAK ALL SHARP EDGES .015 MAX.
2. DO NOT SCALE DRAWING.
3. DIMENSIONS BASED UPON ASME Y14.5M-1994
4. MAX. ALL MACH. SURFACES 250
5. DRAWING UNITS: U.S. INCH

USED ON
ME-444503

MATERIAL
ALUMINUM ROUND PIPE 6061-T6-SCH. 40
ø1 1/2 (1.90 O.D.)

FERMI NATIONAL ACCELERATOR LABORATORY
UNITED STATES DEPARTMENT OF ENERGY

MINERVA-MECH-PLANE ANALYSIS HEAVY FRAME AND BRIDGE LADDER RAILING WELDMENT 1

SCALE	DRAWING NUMBER	SHEET	REV
1:8	3938.300-MC-444499	1 OF 1	

CREATED WITH : Ideas12NXSeries | GROUP: PPD/MECHANICAL DEPARTMENT

Created: 08:30:34 on 08-06-07 (D-M-Y) By: gsmith State: 1-INITIAL

REV	DESCRIPTION	DRAWN	DATE
		APPROVED	DATE

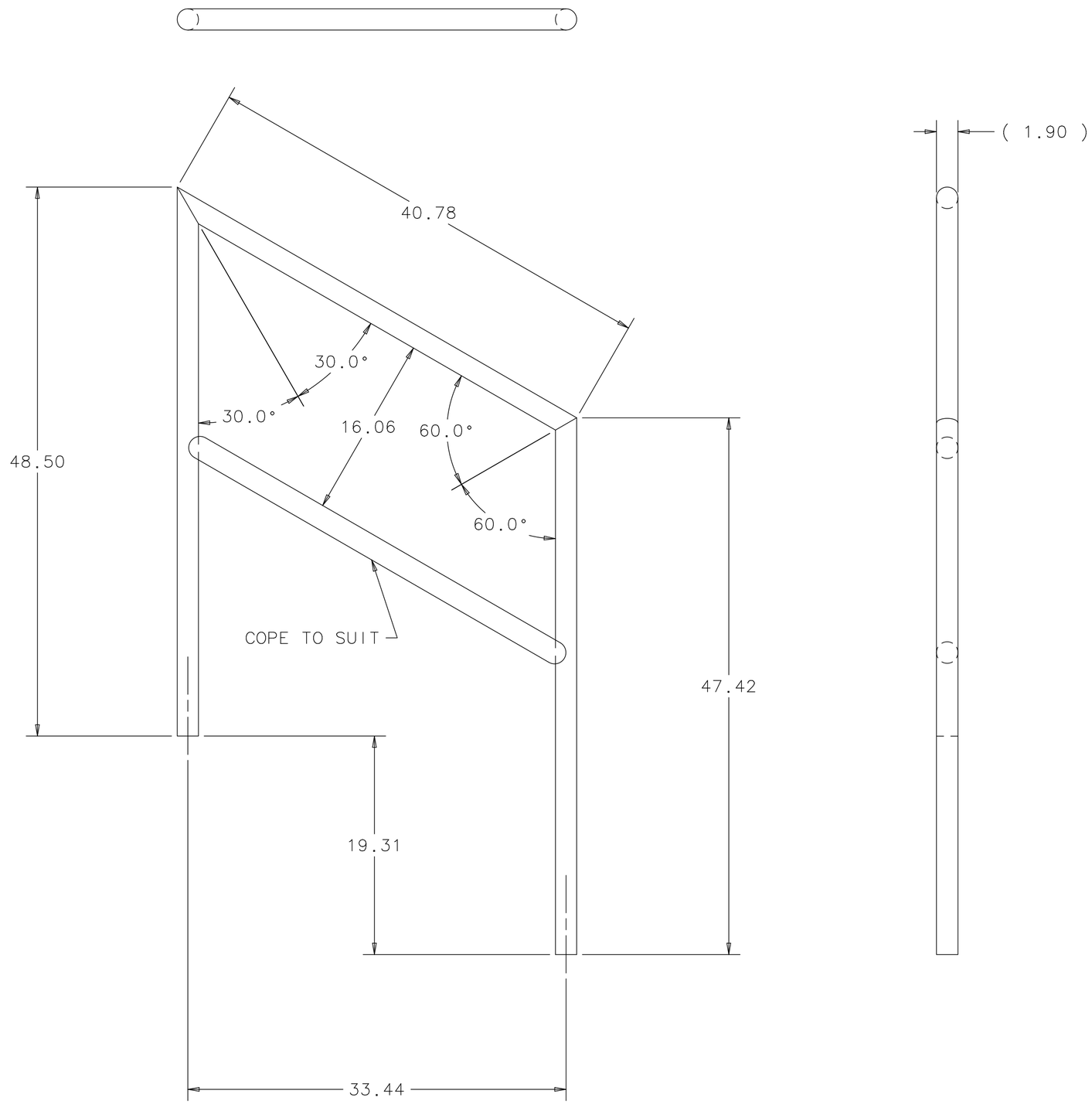

NOTE ;
COPE TO FIT ALL WELD JOINTS.

ITEM	PART NO.	DESCRIPTION OR SIZE	QTY.

PARTS LIST

UNLESS OTHERWISE SPECIFIED					
.XX	.XXX	ANGLES	ORIGINATOR	J.KILMER	24-JAN-2007
± .06	± ---	± 1°	DRAWN	G.SMITH	24-JAN-2007
			CHECKED	W.CYKO	23-MAY-2007
			APPROVED	J.KILMER	06-JUN-2007

1. BREAK ALL SHARP EDGES .015 MAX.
2. DO NOT SCALE DRAWING.
3. DIMENSIONS BASED UPON ASME Y14.5M-1994
4. MAX. ALL MACH. SURFACES 250
5. DRAWING UNITS: U.S. INCH

USED ON: ME-444503

MATERIAL: ALUMINUM ROUND PIPE 6061-T6 SCH.40 ø1 1/2 (1.90 O.D.)

FERMI NATIONAL ACCELERATOR LABORATORY
UNITED STATES DEPARTMENT OF ENERGY

MINERVA-MECH-PLANE ANALYSIS HEAVY FRAME AND BRIDGE LADDER RAILING WELDMENT 2

SCALE	DRAWING NUMBER	SHEET	REV
1:8	3938.300-MC-444500	1 OF 1	

CREATED WITH : Ideas12NXSeries | GROUP: PPD/MECHANICAL DEPARTMENT

Created: 08:28:48 on 08-06-07 (D-M-Y) By: gsmith State: 1-INITIAL

REV	DESCRIPTION	DRAWN	DATE
		APPROVED	DATE

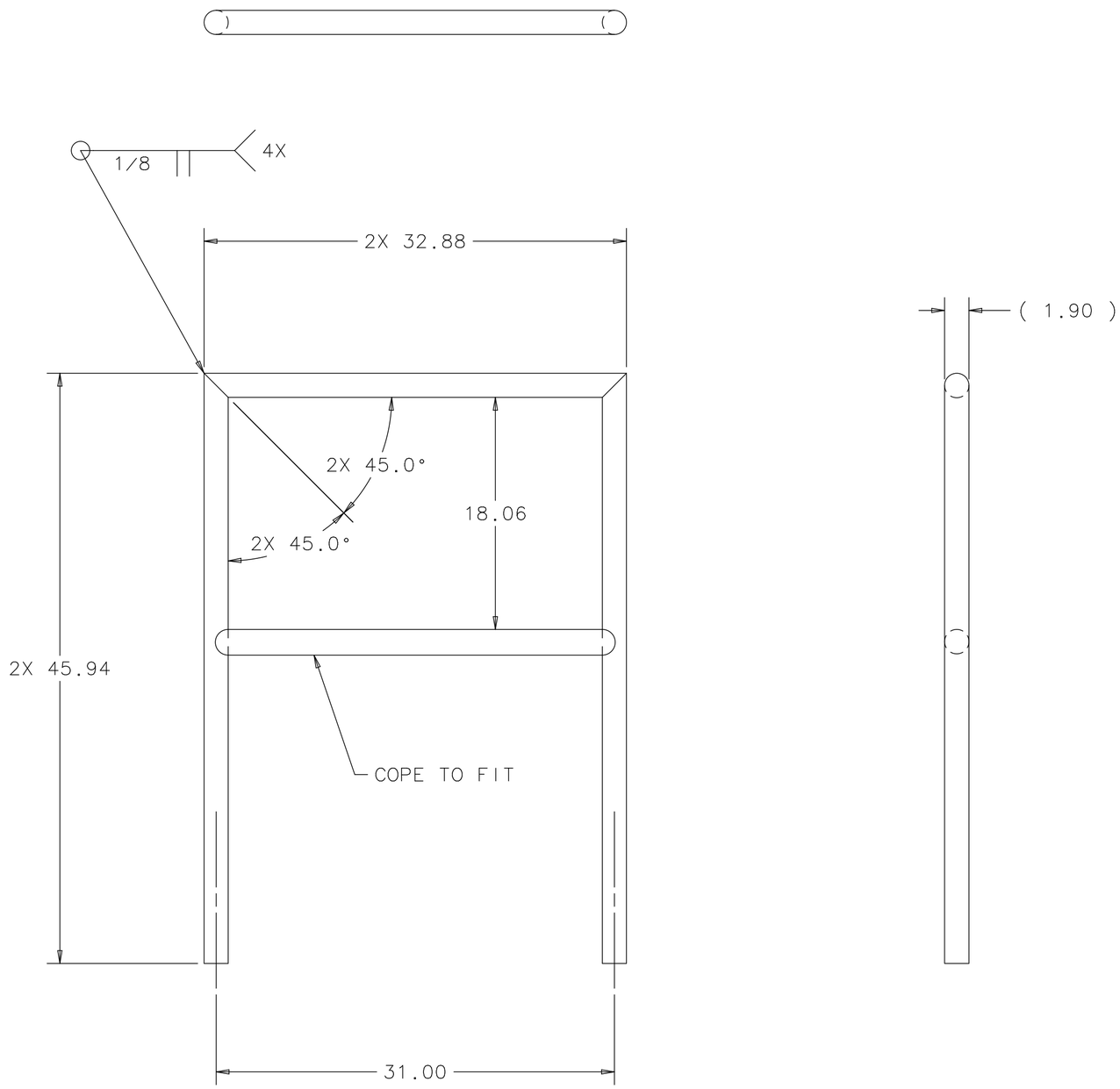

NOTE ;
COPE TO FIT ALL WELD JOINTS.

ITEM	PART NO.	DESCRIPTION OR SIZE	QTY.

PARTS LIST

UNLESS OTHERWISE SPECIFIED			ORIGINATOR	J.KILMER	24-JAN-2007
.XX	.XXX	ANGLES	DRAWN	G.SMITH	24-JAN-2007
± .06	± ---	± 1°	CHECKED	W.CYKO	23-MAY-2007
			APPROVED	J.KILMER	06-JUN-2007

1. BREAK ALL SHARP EDGES .015 MAX.
2. DO NOT SCALE DRAWING.
3. DIMENSIONS BASED UPON ASME Y14.5M-1994
4. MAX. ALL MACH. SURFACES 250
5. DRAWING UNITS: U.S. INCH

USED ON
ME-444503

MATERIAL
ALUMINUM ROUND PIPE 6061-T6 SCH. 40
ø1 1/2 (1.90 O.D.)

FERMI NATIONAL ACCELERATOR LABORATORY
UNITED STATES DEPARTMENT OF ENERGY

MINERVA-MECH-PLANE ANALYSIS HEAVY FRAME AND BRIDGE LADDER RAILING WELDMENT 3

SCALE	DRAWING NUMBER	SHEET	REV
1:8	3938.300-MC-444501	1 OF 1	

CREATED WITH : Ideas12NXSeries | GROUP: PPD/MECHANICAL DEPARTMENT

Created: 08:26:53 on 08-06-07 (D-M-Y) By: gsmith State: 1-INITIAL

REV	DESCRIPTION	DRAWN	DATE
		APPROVED	DATE

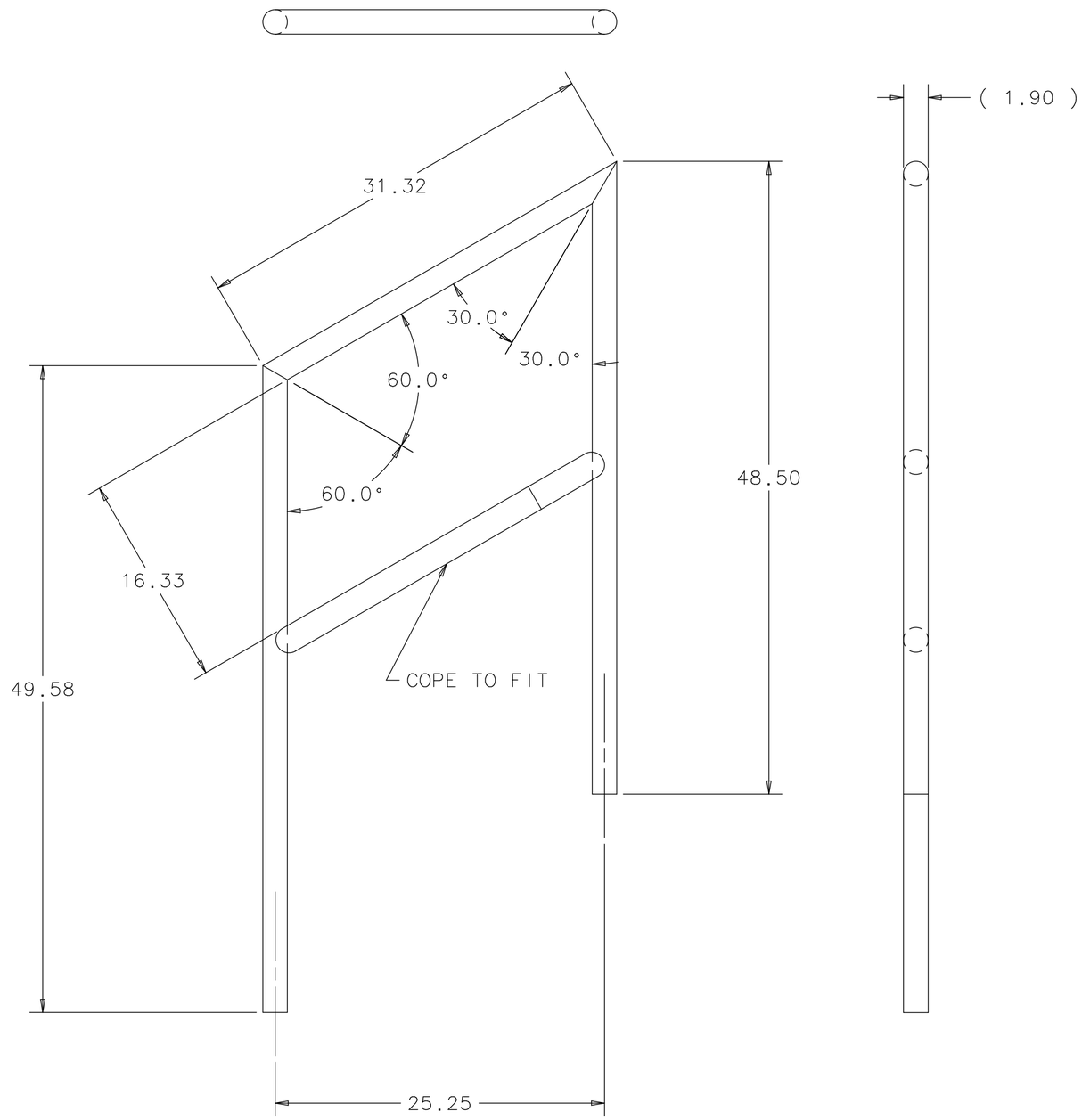

NOTE ;
COPE TO FIT ALL WELD JOINTS.

ITEM	PART NO.	DESCRIPTION OR SIZE	QTY.

PARTS LIST

UNLESS OTHERWISE SPECIFIED					
.XX	.XXX	ANGLES	ORIGINATOR	J.KILMER	24-JAN-2007
± .06	± ---	± 1°	DRAWN	G.SMITH	24-JAN-2007
			CHECKED	W.CYKO	23-MAY-2007
			APPROVED	J.KILMER	06-JUN-2007

1. BREAK ALL SHARP EDGES .015 MAX.
2. DO NOT SCALE DRAWING.
3. DIMENSIONS BASED UPON ASME Y14.5M-1994
4. MAX. ALL MACH. SURFACES 250
5. DRAWING UNITS: U.S. INCH

USED ON
ME-444503

MATERIAL
ALUMINUM ROUND PIPE 6061-T6 SCH. 40
ø1 1/2 (1.90 O.D.)

FERMI NATIONAL ACCELERATOR LABORATORY
UNITED STATES DEPARTMENT OF ENERGY

MINERVA-MECH-PLANE ANALYSIS HEAVY FRAME AND BRIDGE LADDER RAILING WELDMENT 4

SCALE	DRAWING NUMBER	SHEET	REV
1:8	3938.300-MC-444502	1 OF 1	

CREATED WITH : Ideas12NXSeries | GROUP: PPD/MECHANICAL DEPARTMENT

Created: 08:25:23 on 08-06-07 (D-M-Y) By: gsmith State: 1-INITIAL

REV	DESCRIPTION	DRAWN	DATE
		APPROVED	DATE

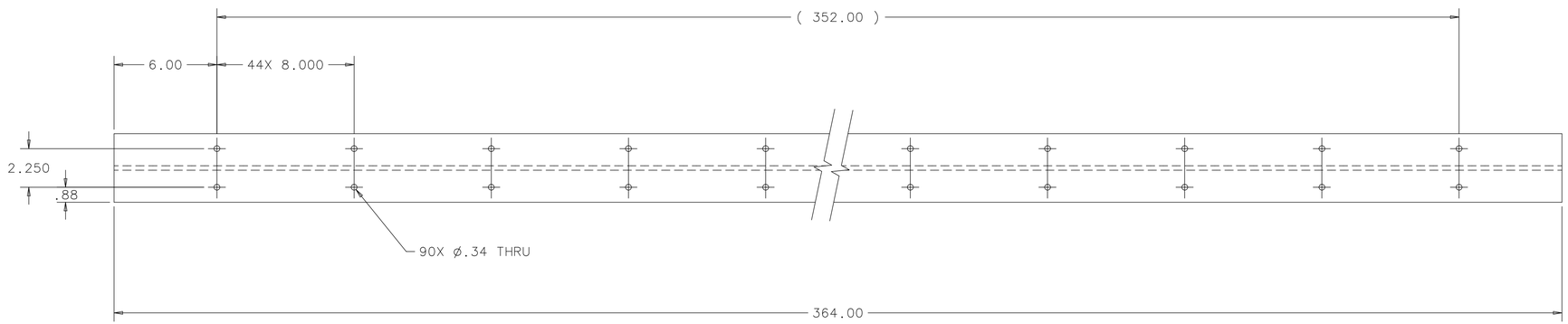

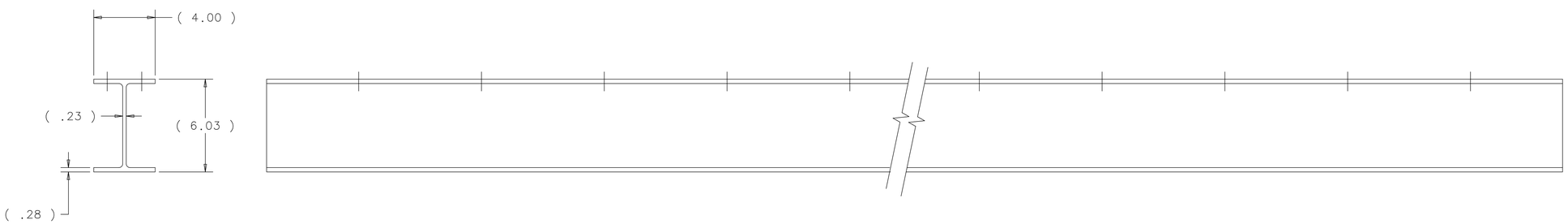

UNLESS OTHERWISE SPECIFIED			ORIGINATOR	W.CYKO	27-FEB-2007
.XX	.XXX	ANGLES	DRAWN	G.SMITH	27-FEB-2007
± .03	± .01	± ---	CHECKED	W.CYKO	23-MAY-2007
			APPROVED	J.KILMER	06-JUN-2007

1. BREAK ALL SHARP EDGES .015 MAX.
2. DO NOT SCALE DRAWING.
3. DIMENSIONS BASED UPON ASME Y14.5M-1994
4. MAX. ALL MACH. SURFACES 125
5. DRAWING UNITS: U.S. INCH

USED ON: MD-444397

MATERIAL: WBEAM W6 X 12 ASTM A36 X 364.00 LG.

FERMI NATIONAL ACCELERATOR LABORATORY
UNITED STATES DEPARTMENT OF ENERGY

MINERVA-MECH-PLANE ANALYSIS HEAVY FRAME AND BRIDGE PLATFORM SFAFT SUPPORT BEAM

SCALE	DRAWING NUMBER	SHEET	REV
1:4	3938.300-MD-444508	1 OF 1	

CREATED WITH : Ideas12NXSeries | GROUP: PPD/MECHANICAL DEPARTMENT

Created: 08:52:09 on 08-06-07 (D-M-Y) By: gsmith State: 1-INITIAL

REV	DESCRIPTION	DRAWN	DATE
		APPROVED	DATE

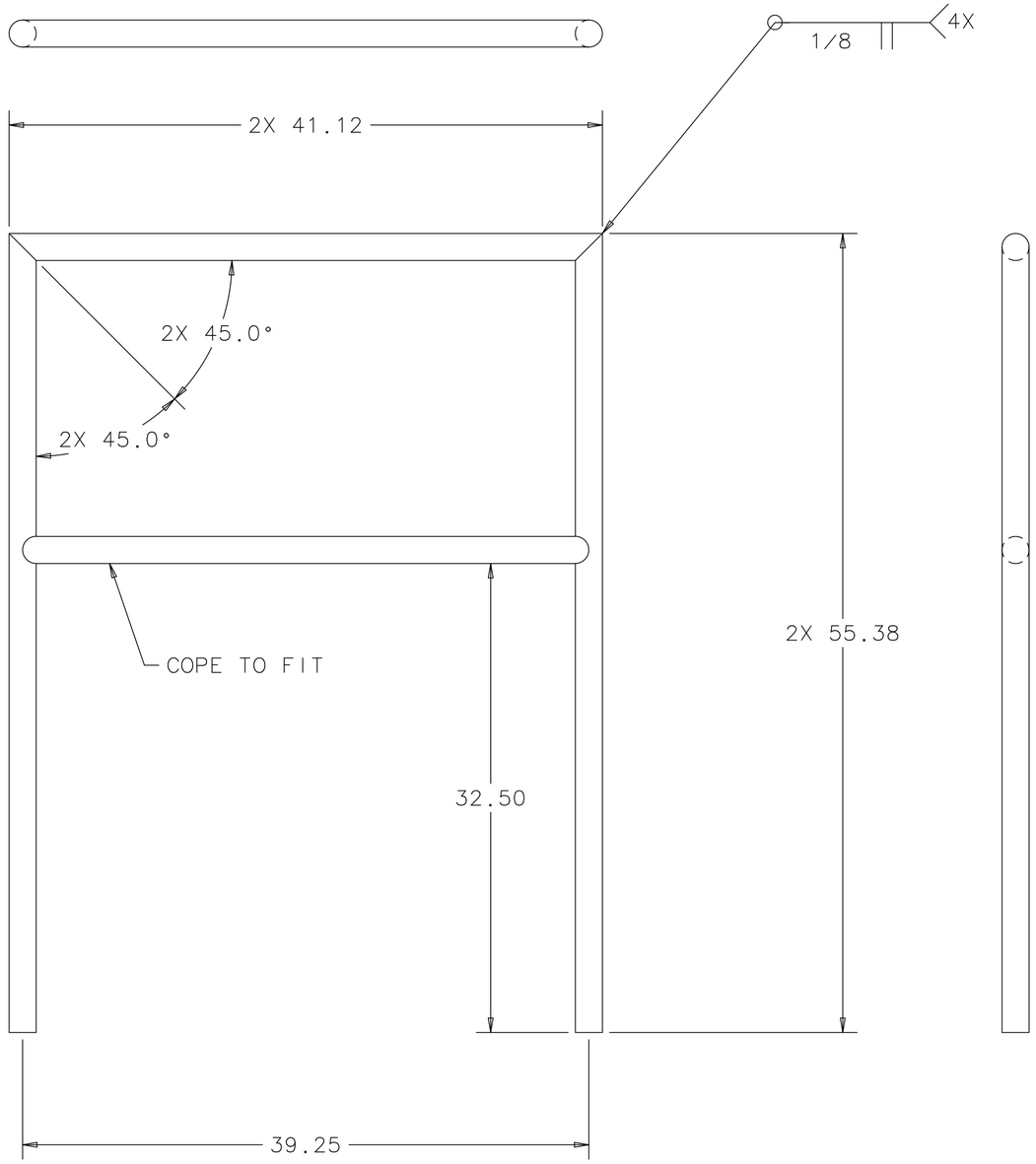

NOTE:
COPE TO FIT ALL WELD JOINTS.

UNLESS OTHERWISE SPECIFIED			ORIGINATOR	J.KILMER	01-MAR-2007
.XX	.XXX	ANGLES	DRAWN	S.KINDELBERGER	01-MAR-2007
± .06	± ---	± 1°	CHECKED	W.CYKO	23-JUN-2007
			APPROVED	J.KILMER	06-JUN-2007

1. BREAK ALL SHARP EDGES .015 MAX.
2. DO NOT SCALE DRAWING.
3. DIMENSIONS BASED UPON ASME Y14.5M-1994
4. MAX. ALL MACH. SURFACES 250
5. DRAWING UNITS: U.S. INCH

USED ON
ME-444503

MATERIAL
ALUMINUM ROUND PIPE 6061-T6 SCH. 40
ø1 1/2 (1.90 O.D.)

FERMI NATIONAL ACCELERATOR LABORATORY
UNITED STATES DEPARTMENT OF ENERGY

MINERVA-MECH. PLANE ANALYSIS HEAVY FRAME AND BRIDGE LADDER RAILING WELDMENT 5

SCALE	DRAWING NUMBER	SHEET	REV
1:8	3938.300-MC-444527	1 OF 1	

CREATED WITH : Ideas12NXSeries | GROUP: PPD/MECHANICAL DEPARTMENT

Created: 08:23:56 on 08-06-07 (D-M-Y) By: gsmith State: 1-INITIAL

REV	DESCRIPTION	DRAWN	DATE
		APPROVED	DATE

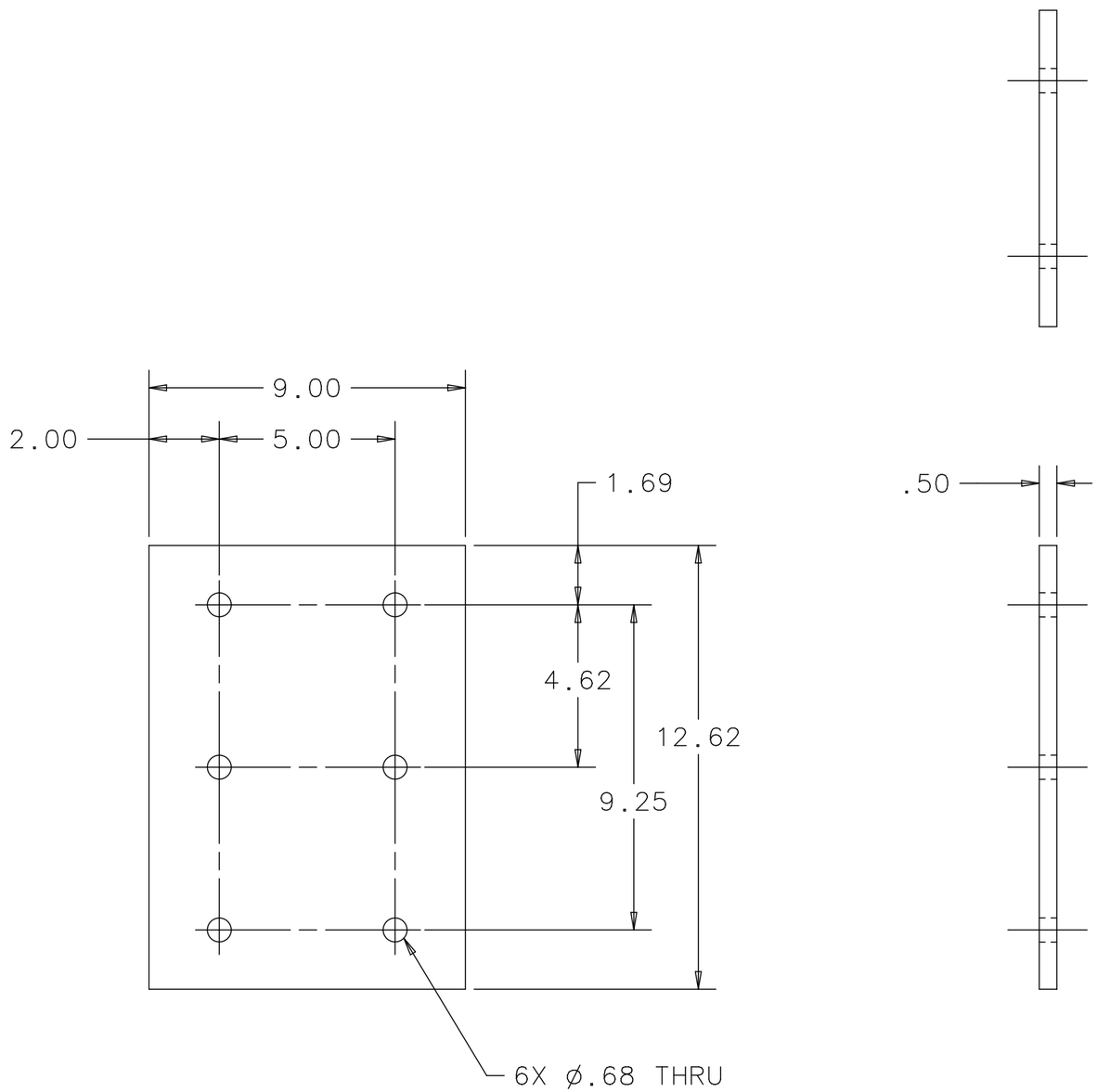

UNLESS OTHERWISE SPECIFIED			ORIGINATOR	J.KILMER	08-MAY-2007
.XX	.XXX	ANGLES	DRAWN	S.KINDELBERGER	08-MAY-2007
± .02	± ---	± ---	CHECKED	W.CYKO	23-MAY-2007
1. BREAK ALL SHARP EDGES .015 MAX. 2. DO NOT SCALE DRAWING. 3. DIMENSIONS BASED UPON ASME Y14.5M-1994 4. MAX. ALL MACH. SURFACES 250 5. DRAWING UNITS: U.S. INCH			APPROVED	J.KILMER	06-JUN-2007
			USED ON	MC-444625	
			MATERIAL	ASTM-A36 STEEL	

FERMI NATIONAL ACCELERATOR LABORATORY
UNITED STATES DEPARTMENT OF ENERGY

MINERVA-MECH-PLANE ANALYSIS HEAVY FRAME AND BRIDGE LADDER BRACKET BACK PLATE

SCALE	DRAWING NUMBER	SHEET	REV
1:4	3938.300-MB-444621	1 OF 1	

CREATED WITH : Ideas12NXSeries | GROUP: PPD/MECHANICAL DEPARTMENT

Created: 09:22:35 on 07-06-07 (D-M-Y) By: gsmith State: 1-INITIAL

REV	DESCRIPTION	DRAWN	DATE
		APPROVED	DATE

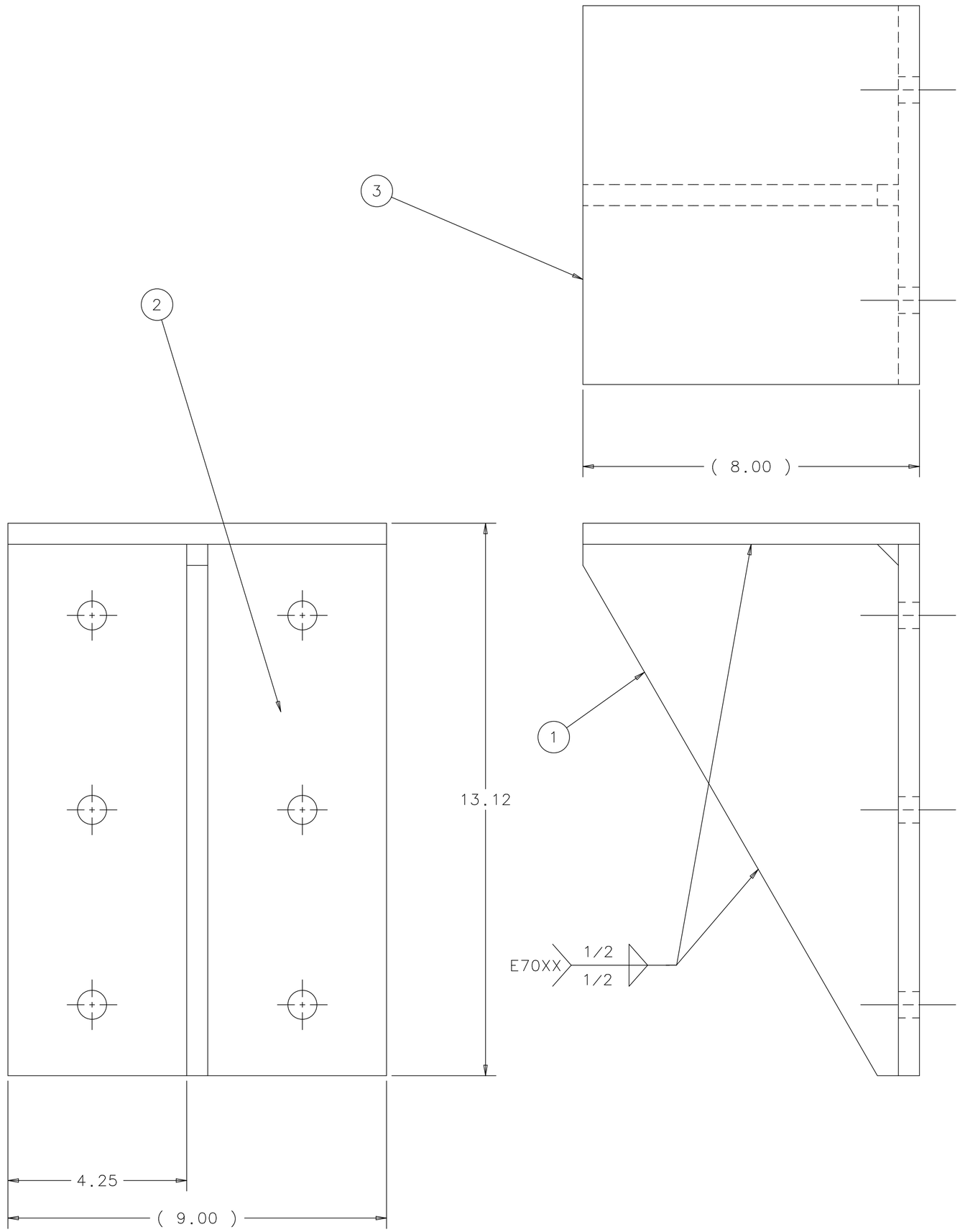

ITEM	PART NO.	DESCRIPTION OR SIZE	QTY.
3	COML	ASTM A36 STEEL PLATE 9 X 8 X .500	1
2	MB-444621	LADDER BRACKET BACK PLATE	1
1	MB-444627	LADDER MOUNT BRACKET ANGLE PLATE	1

PARTS LIST

UNLESS OTHERWISE SPECIFIED					
.XX	.XXX	ANGLES	ORIGINATOR	J.KILMER	24-FEB-2007
± .06	± ---	± 1°	DRAWN	S.KINDELBERGER	09-MAY-2007
			CHECKED	W.CYKO	23-MAY-2007
			APPROVED	J.KILMER	06-JUN-2007

1. BREAK ALL SHARP EDGES .015 MAX.
2. DO NOT SCALE DRAWING.
3. DIMENSIONS BASED UPON ASME Y14.5M-1994
4. MAX. ALL MACH. SURFACES 250
5. DRAWING UNITS: U.S. INCH

USED ON: ME-444503

MATERIAL: SEE PARTS LIST ABOVE

FERMI NATIONAL ACCELERATOR LABORATORY
UNITED STATES DEPARTMENT OF ENERGY

MINERVA-MECH-PLANE ANALYSIS HEAVY FRAME AND BRIDGE LADDER MOUNTING BRACKET WELD

SCALE	DRAWING NUMBER	SHEET	REV
1:4	3938.300-MC-444625	1 OF 1	

CREATED WITH : Ideas12NXSeries | GROUP: PPD/MECHANICAL DEPARTMENT

Created: 08:47:00 on 08-06-07 (D-M-Y) By: gsmith State: 1-INITIAL

REV	DESCRIPTION	DRAWN	DATE
		APPROVED	DATE

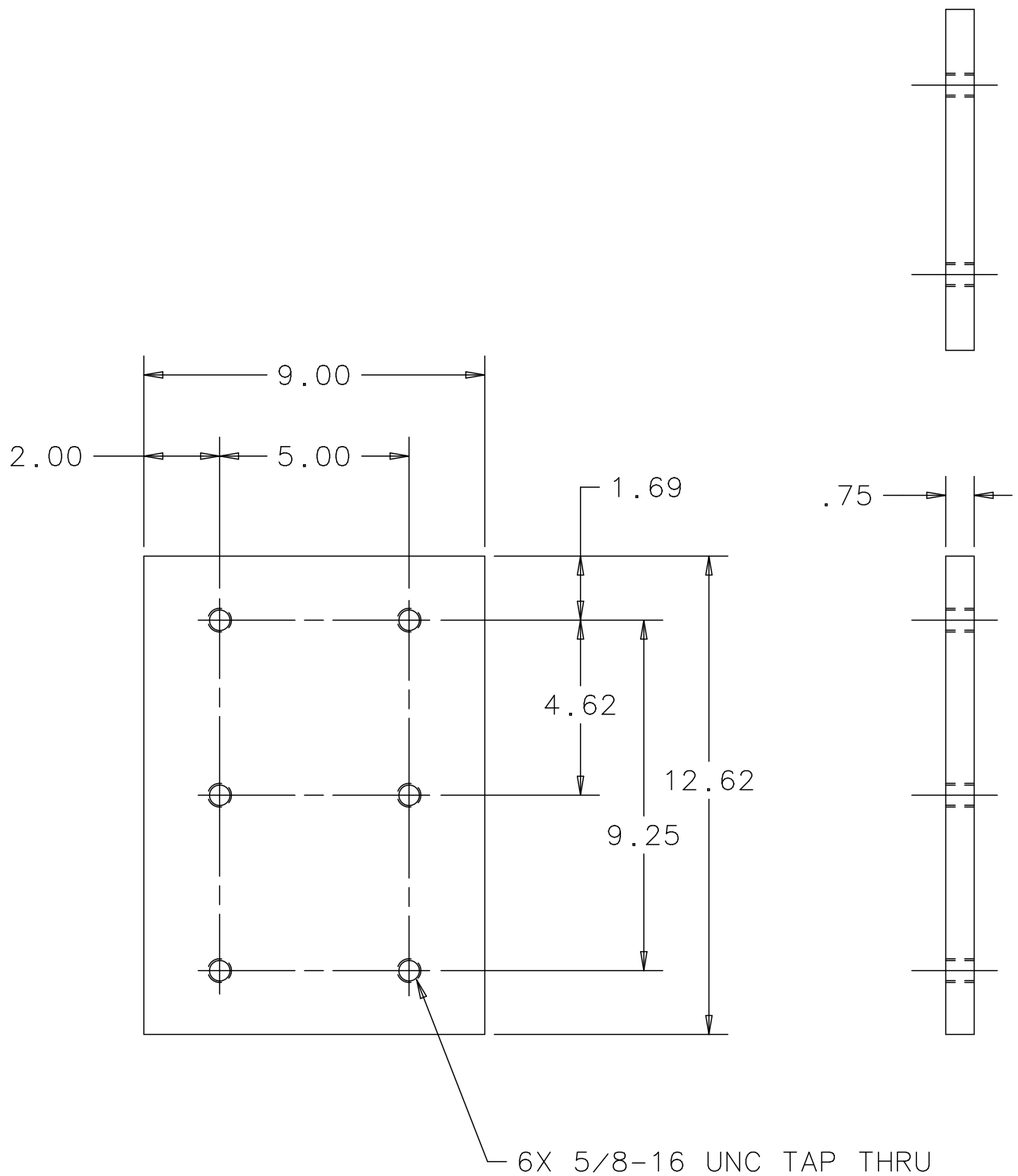

UNLESS OTHERWISE SPECIFIED		
.XX	.XXX	ANGLES
± .02	± ---	± ---

1. BREAK ALL SHARP EDGES .015 MAX.
2. DO NOT SCALE DRAWING.
3. DIMENSIONS BASED UPON ASME Y14.5M-1994
4. MAX. ALL MACH. SURFACES 250
5. DRAWING UNITS: U.S. INCH

ORIGINATOR	J.KILMER	24-FEB-2007
DRAWN	S.KINDELBERGER	09-MAY-2007
CHECKED	W.CYKO	23-MAY-2007
APPROVED	J.KILMER	06-JUN-2007

USED ON: ME-444503

MATERIAL: ASTM A36 STEEL PLATE

FERMI NATIONAL ACCELERATOR LABORATORY
UNITED STATES DEPARTMENT OF ENERGY

MINERVA-MECH-PLANE ANALYSIS HEAVY FRAME AND BRIDGE LADDER MOUNT BRACKET FACE PLATE

SCALE	DRAWING NUMBER	SHEET	REV
1:4	3938.300-MB-444626	1 OF 1	

CREATED WITH : Ideas12NXSeries | GROUP: PPD/MECHANICAL DEPARTMENT

Created: 09:23:58 on 07-06-07 (D-M-Y) By: gsmith State: 1-INITIAL

REV	DESCRIPTION	DRAWN	DATE
		APPROVED	DATE

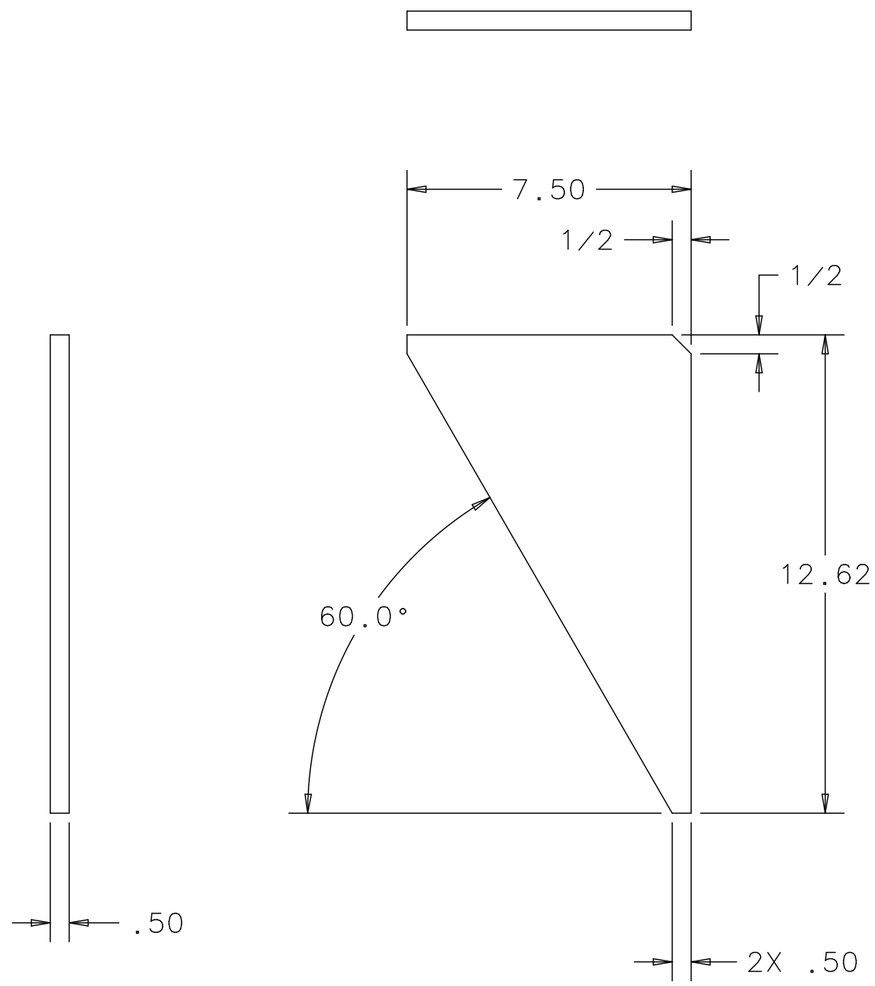

UNLESS OTHERWISE SPECIFIED		
.XX	.XXX	ANGLES
± .03	± ---	± 1°

1. BREAK ALL SHARP EDGES .015 MAX.
2. DO NOT SCALE DRAWING.
3. DIMENSIONS BASED UPON ASME Y14.5M-1994
4. MAX. ALL MACH. SURFACES 250
5. DRAWING UNITS: U.S. INCH

ORIGINATOR	J.KILMER	24-FEB-2007
DRAWN	S.KINDELBERGER	09-MAY-2007
CHECKED	W.CYKO	23-MAY-2007
APPROVED	J.KILMER	06-JUN-2007

USED ON: ME-444503

MATERIAL: ASTM A36 STEEL PLATE

FERMI NATIONAL ACCELERATOR LABORATORY
UNITED STATES DEPARTMENT OF ENERGY

MINERVA-MECH-PLANE ANALYSIS HEAVY FRAME AND BRIDGE LADDER MOUNT BRACKET ANGLE PLATE

SCALE	DRAWING NUMBER	SHEET	REV
1:4	3938.300-MB-444627	1 OF 1	

CREATED WITH : Ideas12NXSeries | GROUP: PPD/MECHANICAL DEPARTMENT

Created: 09:25:46 on 07-06-07 (D-M-Y) By: gsmith State: 1-INITIAL

REV	DESCRIPTION	DRAWN	DATE
		APPROVED	DATE

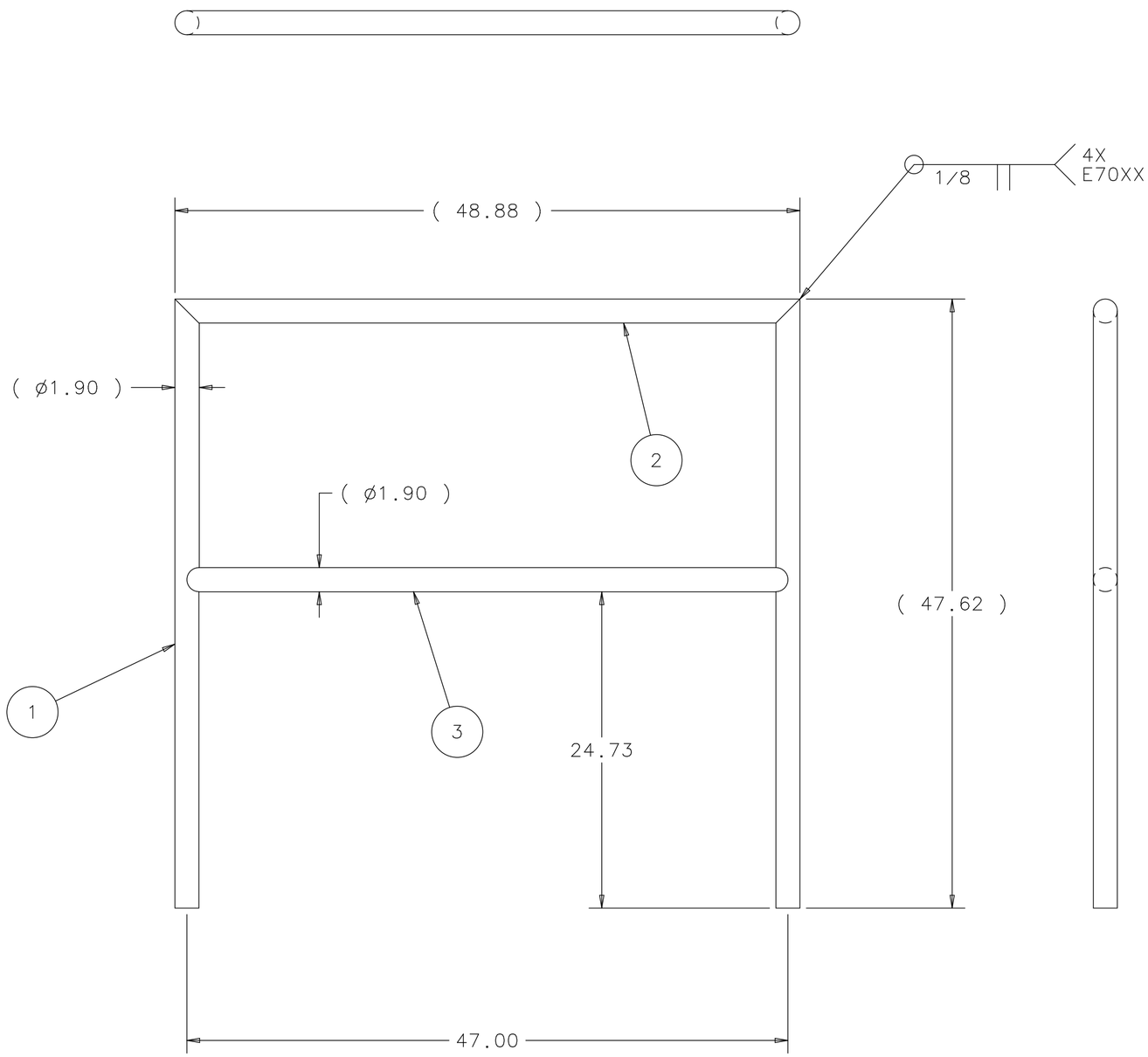

ITEM	PART NO.	DESCRIPTION OR SIZE	QTY.
3	MB-444667	RAIL-LOWER HORIZONTAL PIPE LONG	1
2	MB-444666	RAIL-UPPER HORIZONTAL PIPE LONG	1
1	MB-444379	RAIL-VERTICAL PIPE	2

PARTS LIST

UNLESS OTHERWISE SPECIFIED			ORIGINATOR	W.CYKO	09-JAN-2007
.XX	.XXX	ANGLES	DRAWN	G.SMITH	11-MAY-2007
± .06	± ---	± ---	CHECKED	W.CYKO	23-MAY-2007
			APPROVED	J.KILMER	06-JUN-2007

1. BREAK ALL SHARP EDGES .015 MAX.
2. DO NOT SCALE DRAWING.
3. DIMENSIONS BASED UPON ASME Y14.5M-1994
4. MAX. ALL MACH. SURFACES 250
5. DRAWING UNITS: U.S. INCH

USED ON: ME-444503

MATERIAL: SEE PARTS LIST ABOVE

FERMI NATIONAL ACCELERATOR LABORATORY
UNITED STATES DEPARTMENT OF ENERGY

MINERVA-MECH. PLANE ANALYSIS HEAVY FRAME AND BRIDGE FRONT RAIL WELDMENT

SCALE	DRAWING NUMBER	SHEET	REV
1:8	3938.300-MC-444665	1 OF 1	

CREATED WITH : Ideas12NXSeries | GROUP: PPD/MECHANICAL DEPARTMENT

Created: 08:32:11 on 08-06-07 (D-M-Y) By: gsmith State: 1-INITIAL

REV	DESCRIPTION	DRAWN	DATE
		APPROVED	DATE

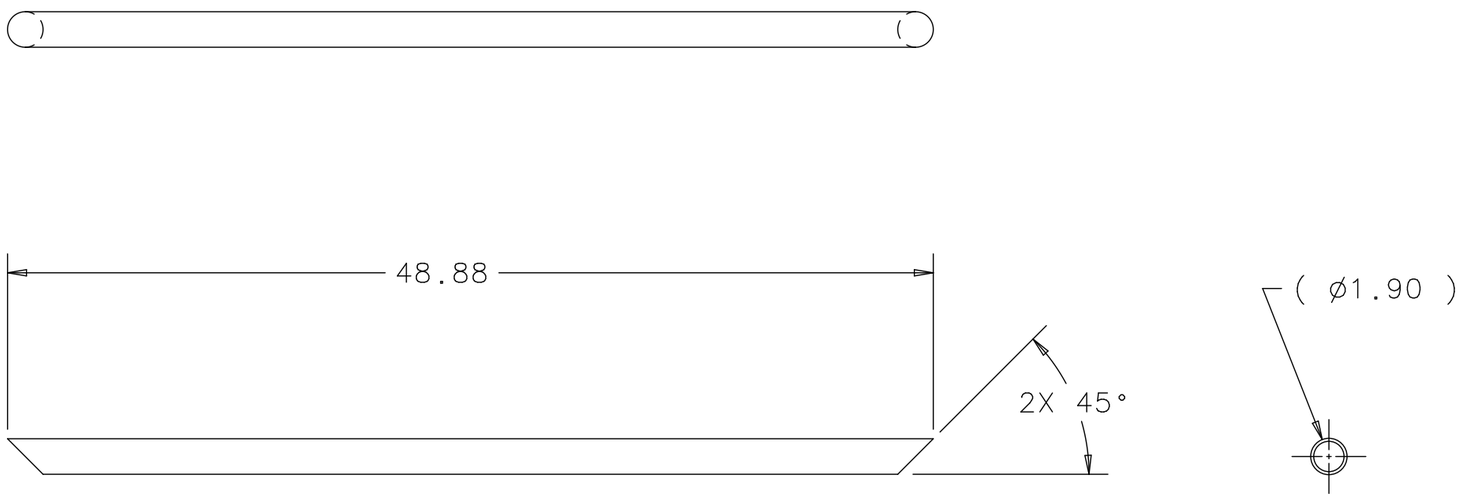

UNLESS OTHERWISE SPECIFIED			ORIGINATOR	W.CYKO	11-MAY-2007
.XX	.XXX	ANGLES	DRAWN	G.SMITH	11-MAY-2007
± .03	± ---	± 1°	CHECKED	W.CYKO	23-MAY-2007
			APPROVED	J.KILMER	06-JUN-2007

1. BREAK ALL SHARP EDGES .015 MAX.
2. DO NOT SCALE DRAWING.
3. DIMENSIONS BASED UPON ASME Y14.5M-1994
4. MAX. ALL MACH. SURFACES 250
5. DRAWING UNITS: U.S. INCH

USED ON
MC-444665

MATERIAL
ALUMINUM ROUND PIPE 6061-T6 SCH. 40
ø1 1/2 (1.90 O.D.)

FERMI NATIONAL ACCELERATOR LABORATORY
UNITED STATES DEPARTMENT OF ENERGY

MINERVA-MECH. PLANE ANALYSIS
HEAVY FRAME AND BRIDGE
UPPER HORIZONTAL PIPE-LONG

SCALE	DRAWING NUMBER	SHEET	REV
1:8	3938.300-MB-444666	1 OF 1	

CREATED WITH : Ideas12NXSeries | GROUP: PPD/MECHANICAL DEPARTMENT

Created: 09:02:14 on 07-06-07 (D-M-Y) By: gsmith State: 1-INITIAL

REV	DESCRIPTION	DRAWN	DATE
		APPROVED	DATE

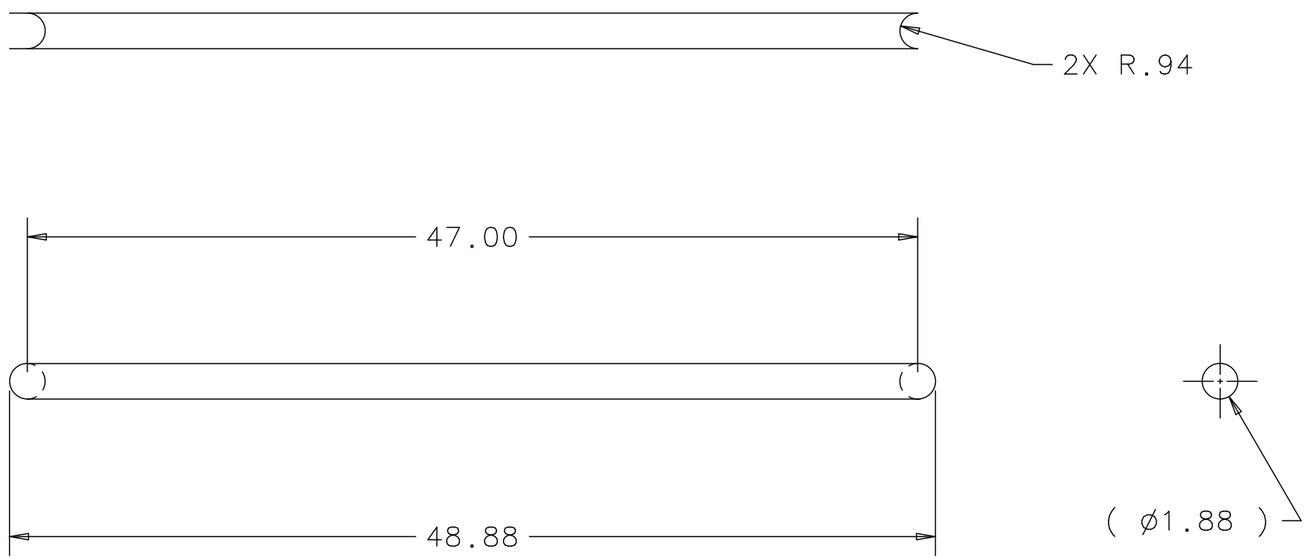

UNLESS OTHERWISE SPECIFIED			ORIGINATOR	W.CYKO	11-MAY-2007
.XX	.XXX	ANGLES	DRAWN	G.SMITH	11-MAY-2007
± .03	± ---	± ---	CHECKED	W.CYKO	23-MAY-2007
			APPROVED	J.KILMER	06-JUN-2007

1. BREAK ALL SHARP EDGES .015 MAX.
2. DO NOT SCALE DRAWING.
3. DIMENSIONS BASED UPON ASME Y14.5M-1994
4. MAX. ALL MACH. SURFACES 250
5. DRAWING UNITS: U.S. INCH

USED ON: MC-444665

MATERIAL: ALUMINUM ROUND PIPE 6061-T6 SCH. 40 ø1 1/2 (1.90 O.D.)

FERMI NATIONAL ACCELERATOR LABORATORY
UNITED STATES DEPARTMENT OF ENERGY

MINERVA-MECH. PLANE ANALYSIS HEAVY FRAME AND BRIDGE LOWER HORIZONTAL PIPE-LONG

SCALE	DRAWING NUMBER	SHEET	REV
1:8	3938.300-MB-444667	1 OF 1	

CREATED WITH : Ideas12NXSeries | GROUP: PPD/MECHANICAL DEPARTMENT

Created: 08:56:06 on 07-06-07 (D-M-Y) By: gsmith State: 1-INITIAL