Fermilab

Particle Physics Division
Mechanical Department Engineering Note

Number:	MD-ENG-02-014
Date:	December 18, 2002
Project Reference:	Target Pile Shielding, WBS 1.1.2.1.8.6, UID 74240
Project:	NuMI
Title:	Design Shear Stress for Welded Joint - E7018 Electrode and Continuous Cast Steel (CCSS) Purchased from US Steel
Author(s):	Andy Stefanik Andy Stefanik
Reviewer(s):	Ang Lee Ang Lee
Key Words:	target pile shielding, continuous cast steel, CCSS, weld sizing

Abstract Summary:

The main concern in specifying this design stress is the variable composition and possible nonhomogeneous structure of the CCSS material.

A test was run to estimate the shear strength of a welded joint made with E7018 electrode and continuous cast steel. Estimates for both the minimum shear strength and the minimum yield strength in shear were obtained from the test data. For comparison, the results were compared to ingot steel and AISI 1006. In the end, the allowable, design shear stress for the E7018-CCSS joint was calculated using von Mises-Hencky theory, the minimum tensile yield stress for ingot iron, and a safety factor of 3. The calculation is in section B.6 and the result is 3,650 psi.

Applicable Codes: The formula Fv = 0.4 Fy from the AISC Manual of Steel Construction was used to back calculate safety factors for calculating Fv from Fu and Fsy. Fv is allowable shear stress. Fu is ultimate tensile strength. Fsy is yield strength in shear.

FERMILAB
ENGINEERING NOTE

SECTION	PROJECT	SERIAL-CATEGORY	PAGE

SUBJECT: Table of Contents

NAME: AMS

DATE: 12/17/02

REVISION DATE:

Section	Subject	Page
A1.	Drawing of test set-up	1
A2.	Test Data	1
A3.	Calculation of Fus from test data	1
A3.1	Data Sets 1 & 2 calculations	1
A3.2	Data Set 3 calculations	2.2
A3.3	Data Set 4 calculations	2.2
B1.	Allowable shear stress formulas & safety factors	2.1
B2.	Allowable shear stress - Ingot iron	3
B3.	Allowable shear stress - AISI 1006	3
B4.	Ultimate strength for the test joint	3
B5.	Yield strength in shear for the test joint	4
B6.	Allowable shear stress based on ingot iron properties	4
B7.	Conclusion	4
	Table - Ingot iron properties	5

Appendices

A	Drawing of test set-up
B	Test data
C	Test data plot
D	Blocks after test weld broke
E	Close-up of broken test weld

SUBJECT: T-blocks: Shear strength of ccss at leg of E7018 fillet weld

NAME: AMS

DATE: 6/27/01

REVISION DATE:

A. Measured shear strength

1. Test set up - See dwg 8875.126-ME-406214 in Appendix A.

2. Test data - See Appendix B

3. Fus - Calculated from test data

FBD of test set up:

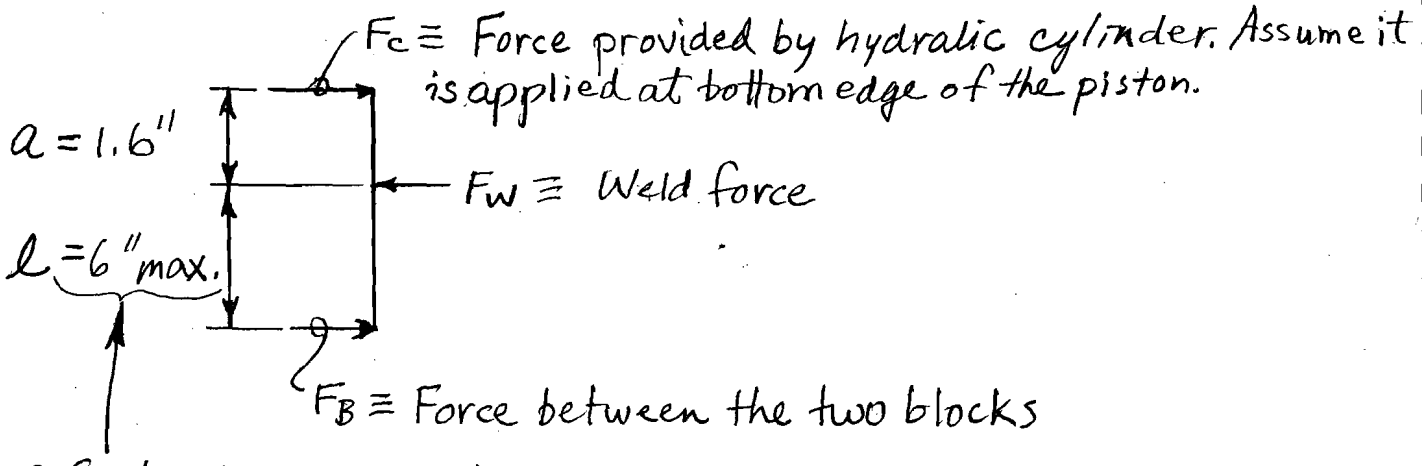

Refer to the drawing to see where these dimensions come from.

$$F_W = F_c \frac{(l+a)}{l}$$

3.1 Data Sets 1 & 2:

$$F_c = \underbrace{1{,}200 \frac{Lbs}{in^2}}_{\text{Pressure in hydraulic cylinder at weld failure (see App C - Data set \#2)}} * \underbrace{11.045\, in^2}_{\text{Cylinder effective area}} = 13{,}254 \text{ Lbs}$$

See page 2.2 for §3.2 & §3.3.

$$F_W = \frac{F_c(l+a)}{l} = 13{,}254 \text{ Lbs} \frac{(6+1.6)\cancel{in}}{6\ \cancel{in}}$$

$$= 16{,}790 \text{ Lbs minimum}$$

Cylinder pressure reading could be off by 10%.

$\therefore$ Use $F_W = 16{,}790\,(0.9) = 15{,}000$ Lbs

Weld length = 1.3"

Unit base metal strength $= \dfrac{15{,}000 \text{ Lbs}}{1.3 \text{ in}} = 11{,}535 \dfrac{\text{Lbs}}{\text{in of test weld}}$

Weld leg area = larger of $\left\{\begin{matrix} 0.32 * 1.3 = 0.416 \\ 0.36 * 1.26 = 0.4536 \end{matrix}\right\} = 0.4536 \text{ in}^2$

Fus at the weld leg $= \dfrac{15{,}000 \text{ Lbs}}{0.4536 \text{ in}^2} = \underline{33{,}000 \text{ psi}}$

B. Specify allowable shear stress, F_v, at the weld leg:
Start with the AISC formula for F_v and back calculate safety factors that can be used to calculate F_v from F_u (Ultimate tensile strength) and F_{sy} (yield strength in shear).

1. In the AISC code, the base metal allowable shear stress is 0.4 Fy. For A36 steel:

$$F_v\Big|_{F_y} = 0.4\,(36{,}000) = 14{,}400 \text{ psi}$$

Rough estimate for ultimate shear strength.

Based on F_u: $F_v\Big|_{F_u} = \dfrac{(0.75\,F_u)}{3} = \dfrac{0.75\,(58{,}000)}{3} = 14{,}500$ psi

* ASME: 0.25 base σ_u
$\sigma_y/\sigma_u = 0.75$ 0.33 base σ_y $\frac{2}{3} = 0.66$

Back calculated safety factor to get result to agree with $F_v = 0.4\,F_y$.

Based on F_{sy}: $F_v\Big|_{F_{sy}} = \dfrac{F_{sy}}{1.44} = \dfrac{0.577}{1.44} F_y = 0.4\,(36{,}000) = 14{,}400$ psi

Back calculated safety factor using $F_v = 0.4\,F_y$.

Note: $F_{sy} = 0.577\,F_y$ for von Mises-Hencky theory

A. con't

3.2 Data Set 3

$F_c = 1{,}600\,(11.045) = 17{,}672$ Lbs

$F_w = 17{,}672\,\dfrac{(6+1.6)}{6} = 22{,}385$ Lbs minimum

Use $F_w = 22{,}385\,(0.9) = 20{,}140$ Lbs

Weld length = 1.42"

Unit base metal strength = $\dfrac{20{,}140 \text{ Lbs}}{1.42 \text{ in}} = 14{,}180 \dfrac{\text{Lbs}}{\text{in of test weld}}$

Weld leg area = $0.3\,(1.4) = 0.42 \text{ in}^2$

Fus at the weld leg = $\dfrac{20{,}140 \text{ Lbs}}{0.42 \text{ in}^2} = \underline{48{,}000 \text{ psi}}$

3.3 Data Set 4

$F_c = 1{,}400\,(11.045) = 15{,}463$ Lbs

$F_w = 15{,}463 * (6+1.6)/6 = 19{,}590$ Lbs minimum

Use $F_w = 19{,}590\,(0.9) = 17{,}630$ Lbs

Weld length = 1.43"

Unit base metal strength = $\dfrac{17{,}630 \text{ Lbs}}{1.43 \text{ in}} = 12{,}330$ Lbs/in

Weld leg area = $0.33\,(1.43) = 0.472 \text{ in}^2$

Fus at the weld leg = $17{,}630 \text{ Lbs}/0.472 \text{ in}^2 = \underline{37{,}360 \text{ psi}}$

2. Calculate allowable base metal shear stress based on published values for ingot iron. Use the AISC formulas and safety factors given in § B.1.

$F_u = 38{,}000$ psi (See table on page 5)

$F_y = 19{,}000$ psi "

$F_u/F_y = 2$

Based on F_y: $F_v = 0.4(19{,}000) = 7{,}600$ psi

Based on F_u: $F_v = \frac{0.75(38{,}000)}{3} = 9{,}500$ psi

Based on F_{sy}: $F_v = \frac{0.577(19{,}000)}{1.44} = 7{,}600$ psi

$0.4 =$

3. Repeat the calc in 2 for AISI 1006:

$F_u = 43{,}000$ psi $F_y = 24{,}000$ psi $F_u/F_y = 1.8$

Based on F_y: $F_v = 0.4(24{,}000) = 9{,}600$ psi

Based on F_u: $F_v = 0.75(43{,}000)/3 = 10{,}750$ psi

Based on F_{sy}: $F_v = \frac{0.577(24{,}000)}{1.44} = 9{,}600$ psi

4. F_u at the weld leg $= \frac{F_{us}}{0.75} = \frac{33{,}000^*}{0.75} = 44{,}000$ psi

* Lowest F_{us} calculated from the test data.

$F_u = 44{,}000$ psi is close to F_u for AISI 1006 steel.

$F_{us} = 33{,}000$ psi is between the F_{us} values for ingot steel, 28,500 psi, and AISI 1006, 32,250 psi.

5. Calculate the yield strength in shear from the test data:

$$F_c = \underbrace{800 \frac{Lbs}{in^2}}_{\text{Pressure in hydraulic cylinder at yield point (See App C - Data Set \#2)}} * \underbrace{11.045\ in^2}_{\text{Cylinder effective area}} = 8,836\ Lbs$$

$$F_w = \frac{F_c(l+a)}{l} = 8,836\ Lbs\ \frac{(6+1.6)\ in}{6\ in} = 11,190\ Lbs$$

Cylinder pressure reading could be off by 10%

$\therefore$ Use $F_w = 11,190\ (0.9) = 10,000\ Lbs$

$$F_{sy} = \frac{F_w}{A} = \frac{10,000\ Lbs}{0.4536\ in^2} = 22,000\ psi$$

Area from pg 2.1

$F_{sy} = 22,000$ psi is greater than the F_{sy} values for ingot iron (10,963 psi) and AISI 1006 (13,848 psi).

6. Calculate allowable shear stress on the welded joint using ingot iron and a safety factor of 3.

$F_{sy} = 0.577\ (F_y) = 0.577\ (19,000) = 10,963$ psi

Allowable shear stress $= 10,963/3 = \underline{3,650\ psi}$

7. Conclusion: Use the result obtained in § B6. Allowable shear stress of CCSS material to be used in welded joint design with E7018 electrode is 3,650 psi.

AMS 6/27/01 5/5

Table 1-57. MECHANICAL PROPERTIES OF METALS AND ALLOYS*

Typical Composition, Properties, and Uses of Common Materials

See also Tables 1-59, 1-69, 3-1, and 3-2.

For MN/m^2 multiply strength in thousands of psi by 6.895.

No.	Material	Nominal composition	Form and condition	Typical mechanical properties: Yield strength (0.2% offset), 1000 lb/sq in.	Tensile strength, 1000 lb/sq in.	Elongation, in 2 in., %	Hardness, Brinell	Comments
	FERROUS ALLOYS							
	Ferrous alloys comprise the largest volume of metal alloys used in engineering. The actual range of mechanical properties in any particular grade of alloy steel depends on the particular history and heat treatment. The steels listed in this table are intended to give some idea of the range of properties readily obtainable. Many hundreds of steels are available. Cost is frequently an important criterion in the choice of material; in general the greater the percentage of alloying elements present in the alloy, the greater will be the cost.							
	IRON							
1	Ingot iron (Included for comparison)	Fe 99.9	Hot-rolled	29	45	26	90	
			Annealed	19	38	45	67	
	PLAIN CARBON STEELS							
2	AISI-SAE 1020	C 0.20 Mn 0.45 Si 0.25 Fe bal.	Hot-rolled	30	55	25	111	Bolts, crankshafts, gears, connecting rods; easily weldable
			Hardened (water-quenched, 1000°F-tempered)	62	90	25	179	
3	AISI 1025	C 0.25 Fe bal. Mn 0.45	Bar stock					
			Hot-rolled	32	58	25	116	
			Cold-drawn	54	64	15	126	
4	AISI-SAE 1035	C 0.35 Mn 0.75	Hot-rolled	39	72	18	143	Medium-strength, engineering steel
			Cold-rolled	67	80	12	163	
5	AISI-SAE 1045	C 0.45 Fe bal. Mn 0.75	Bar stock					
			Annealed	73	80	12	170	
			Hot-rolled	45	82	16	163	
			Cold-drawn	77	91	12	179	
6	AISI-SAE 1078	C 0.78 Fe bal. Mn 0.45	Bar stock					
			Hot-rolled; spheroidized	55	100	12	207	
			Annealed	72	94	10	192	
7	AISI-SAE 1095	C 0.95 Fe bal. Mn 0.40						
8	AISI-SAE 1120	C 0.2 Mn 0.8 S 0.1	Cold-drawn	58	69	—	137	Free-cutting, leaded, resulphurized steel; high-speed, automatic machining
	ALLOY STEELS							
9	ASTM A202/56	C 0.17 Mn 1.2 Cr 0.5 Si 0.75	Stress-relieved	45	75	18	—	Low alloy; boilers, pressure vessels

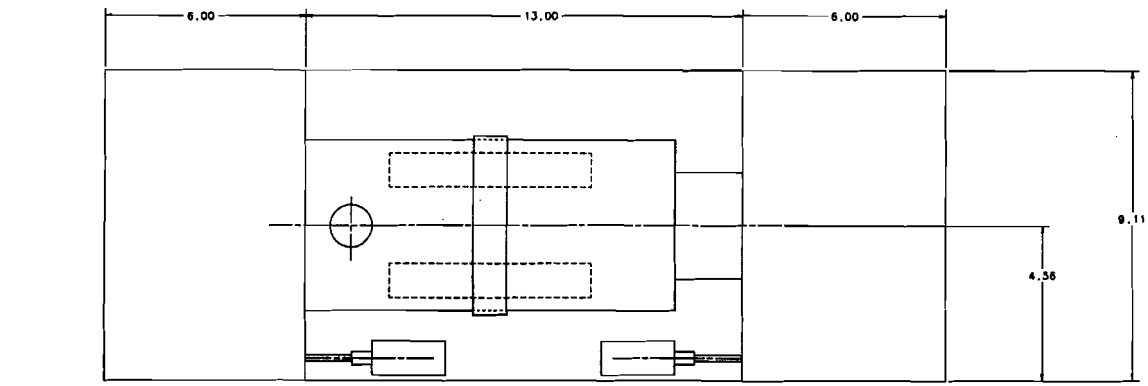

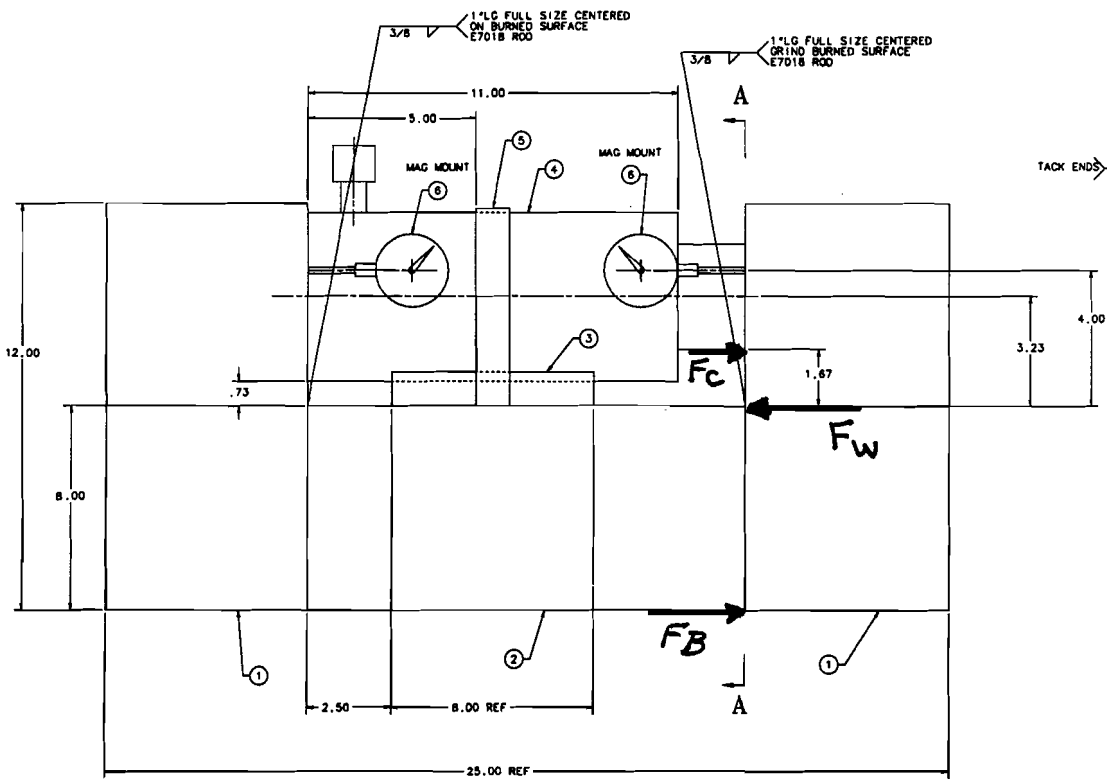

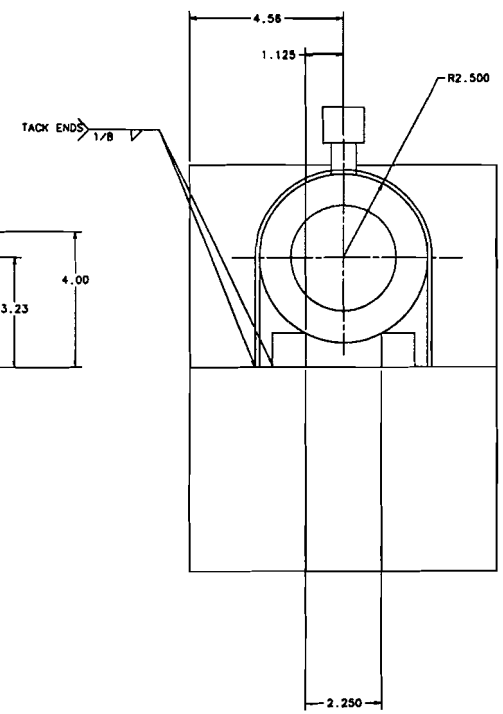

SECTION A-A

NOTES:
1. APPROXIMATE WEIGHT 543#

JUN 2001
REFERENCE ONLY
Not For Fabrication

Appendix A

ITEM NO.	PART NO.	DESCRIPTION OR SIZE	QTY. REQ.
6		DIAL INDICATOR .001" GRAD., .100 PER REV	2
5		1/8x1x17 3/4LG HRS FLAT	1
4		ENERPAC 50 TON CYLINDER RC-506	1
3		1x1x8 LG KEY STOCK	2
2		9.11 CCS 6x13	1
1		9.11 CCS 6x12	2

PARTS LIST

DRAWN	A.W. STEFANIK	6/13/01
DESIGNED	G.R. TROTTER	6/13/01
CHECKED	D. ARNOLD	6/20/01
APPROVED	A.W. STEFANIK	6/20/01

MATERIAL: LISTED ABOVE

FERMI NATIONAL ACCELERATOR LABORATORY
UNITED STATES DEPARTMENT OF ENERGY

PPD/MECHANICAL DEPARTMENT
NUMI CCS WELD DESTRUCTION TEST ASSY

SCALE .75 | DRAWING NUMBER 8875.126-ME-406214 | SHEET NO. 1 OF 1 | REV.

Plotted by trotter on 27-Jun-01 , File: 406214-01.prt

FERMILAB
ENGINEERING NOTE

SECTION	PROJECT	SERIAL-CATEGORY	PAGE
			B1/3

SUBJECT: Appendix B Test Data — Dial Ind.

NAME: AMS

DATE: 6/25/01

REVISION DATE:

Data set #1

hydraulic pr.	Unprep	Prep
0	0	0
100 psi	0.009	.016
~600 psi	.013	.018
800 psi	.020	.021
1,000 psi (1,000?)	.026	.025
1,200	.029	.032
Pumped pr dropped to 1,000	.029	.0485

3 1/8 φ cylinder against this block

1,200 to break weld at the base.

Turn cylinder around.

Data set #2

	Same weld	Used double weld on prep side to secure this block so the other test weld on the unpreped side would break.	Double weld.
0	0		0
100	.004		.005
300	.0055		.007
600	.009		.0135
800	.012		.022
1000	.026		.033
1,200 almost poped.	.059		.041
2 pumps 900	.090		.041

Weld in data set #1 - 2nd load application

3 1/8" φ cylinder against this block

Data is plotted in Appendix D.

FERMILAB
ENGINEERING NOTE

SECTION	PROJECT	SERIAL-CATEGORY	PAGE
			B2/3

SUBJECT: Data Set #3 (+)

NAME: AMS

DATE: 7/3/2001

REVISION DATE:

Weld area

2 q length = 1.42

Hydraulic Cylinder Press (psig)	Def. back weld	Deflection test weld (in)
0		0
complete 1st pump	0.0005	0.00325
1 pump.	0.002	0.00935
200	0.002	0.01235
400	0.0025	0.01475
600	0.0031	0.01805
800	0.005	0.01985
1,000	0.006	0.02075
1,100	0.0082	0.021
1,200	0.0115	0.02150
1,300	0.015	0.02240
1,400	0.019	0.02370
1,400	0.0225	0.025
1,600	0.031	0.02865
1,600	0.037	0.03170
1,600	0.042	0.03815
1,260	0.041	0.05725 increasing

FERMILAB
ENGINEERING NOTE

SECTION	PROJECT	SERIAL-CATEGORY	PAGE
			B3/3

SUBJECT: Data Set #4 (*)
WELD

NAME: AMS
DATE: 7/3/2001
REVISION DATE:

Test weld

Hydraulic Cylinder pres. (psig)	Deflection (in) Left gauge	Deflection (in) Right gauge Anchor
0	0	0
200	0.003	0.014
400	0.0039	0.0155
600	0.0046	0.016
800	0.0055	0.017
1,000	0.0062	0.018
1100	0.0067	0.0185
1,200	0.007	0.019
1,300	0.0075	0.0198
1,400	0.0092	0.021

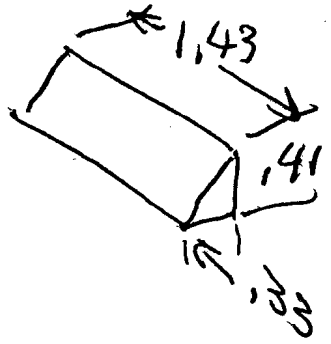

Couldn't increase pressure any further. Deflection took off with each pump.

FERMILAB
ENGINEERING NOTE

SECTION	PROJECT	SERIAL-CATEGORY	PAGE
			C1/1

SUBJECT: Appendix C
Test data plot

NAME: AMS

DATE:

REVISION DATE:

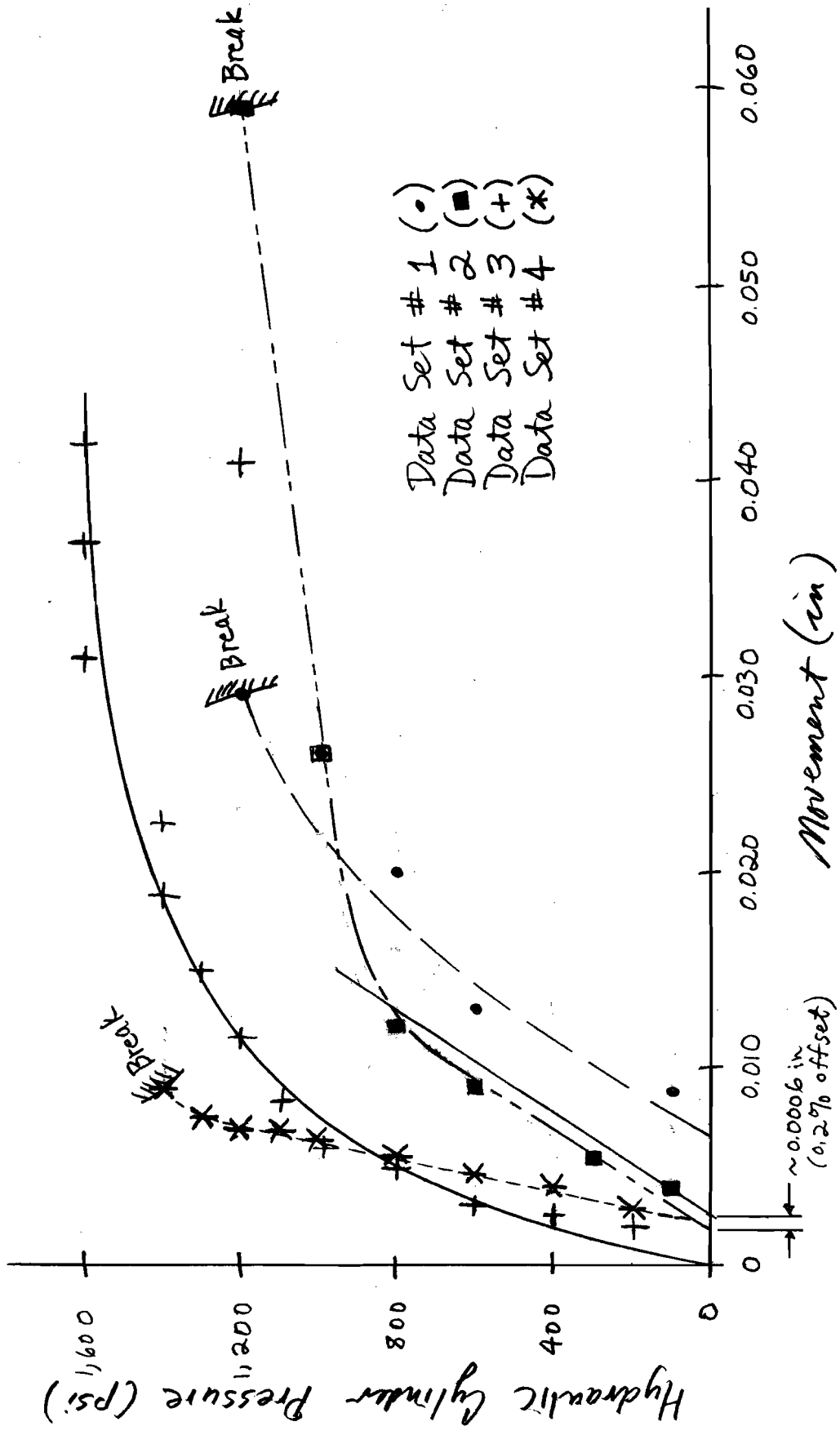

Strain at yield point = 0.2%
= 0.002 in/in

Permanent set = 0.002 in/in * 0.32 in = 0.00064 in

01-626 7/5/2001

Fermilab Photograph

NuMI Weld Test