Fermilab

Particle Physics Division 12-01-01

Mechanical Department Engineering Note

Number: MD-Eng-092 Date: OCTOBER 19,2005
NOVEMBER 15,2006 (rev. PART B)

Project: MuCool

Project Internal Reference:

Title: MuCool Transfer Line and Bayonet Box

Author(s): Robert J. Woods, Bill Cyko

Reviewer(s):

Key Words: MuCool, Transfer Line, Bayonet Box, Bayonet Box Support Structure

Abstract/Summary:

This report contains calculations for:

A) The maximum length between vertical supports for a He/Ln_2 Transfer Line.
B) Design of the Bayonet Can
C) Cool down calculations for contraction of the one inch tubing within the Bayonet Box
D) Cool down calculations for contraction of the one inch tubing within the Transfer Line
E) Heat transfer calculations for the Bayonet Box Shield

Fermilab

Particle Physics Division 12-01-01

Mechanical Department Engineering Note

Number: MD-Eng-092 Date: October 19,2005

Project: MuCool

Project Internal Reference:

Title: MuCool Transfer Line and Bayonet Box

Author(s): Robert J. Woods

Reviewer(s):

Key Words: MuCool, Transfer Line, Bayonet Box, Bayonet Box Support Structure

Abstract/Summary:

This report contains calculations for:

A) The maximum length between vertical supports for a He/LN_2 Transfer line.
B) Design of a Bayonet Can.
C) Cool down calculations for contraction of the one inch tubing within the Bayonet Box
D) Cool down calculations for contraction of the one inch tubing within the transfer line
E) Heat transfer calculations for Bayonet Box shield

F) Design of a structure to support the Bayonet Box

Applicable Codes:

1. *AISC Manual of Steel Construction*, Allowable Stress Design, Ninth Edition
2. *ASME BOILER AND PRESSURE VESSEL CODE*, Section VIII, Division 1
3. *ANSI/ASCE Minimum Design Loads for Buildings and Other Structures 7-88* Approved November 27,1990
4. *BROOKHAVEN NATIONAL LABORATORY SELECTED CRYOGENIC DATA NOTEBOOK* Volume 1, Sections I-IX, Revised August 1980
5. *Flexible Metal Hose and Fittings*, Senior Flexonics Inc., February 1993
6. *Hilti North American Product Technical Guide 2001 edition.*

PART A

MAXIMUM LENGTH BETWEEN VERTICAL SUPPORTS FOR THE He / LN_2 TRANSFER LINE

ASME CODE B31.9 WORKING PRESSURE FOR NON-FLAMMABLE LIQUIDS = 350 PSIG (2300 KPA)

TRANSFER LINE WT. :

1" OD LINES : 4 @ 0.50 #/F = 2.0 #/F
3 1/2" SCH 10 : = 4.97 #/FT
4" SCH 10 : = 5.61 #/FT
6" SCH 5 : = 7.59 #/FT
20.17 #/FT

HELIUM WT = 7.8 #/FT 3

AREA OF HELIUM IN 1" O.D. PIPE :

$1.0 - (2(0.049)) = 0.902$ IN

AREA = $\pi d^2/4 = 3.4159(0.902)^2/4 = 0.639 \text{ IN}^2$
$= 0.0044 \text{ FT}^2$

WT OF HELIUM = 0.0044(7.8)
= 0.04 #/FT

NITROGEN WT = 50.5 #/FT 3

AREA OF NITROGEN = $\frac{\pi(4.260)^2}{4} - \frac{\pi(4.000)^2}{4}$

= 14.253 − 12.566
= 1.687 IN²
= 0.012 FT²

WT OF NITROGEN = 50.5(0.012)
= 0.59 #/FT

TOTAL WEIGHT PER FOOT = 20.17 + 0.04 + 0.59
= 20.80 #/FT

SAY 21 #/FT

OR 1.75 #/IN

6" SCH 5 PIPE CARRIES TOTAL WEIGHT
$I = 11.85 \text{ IN}^4$ $S = 3.576 \text{ IN}^3$

FOR MIN. 2 SPAN CONDITION, $M_{MAX} = -\frac{1}{8} w l^2$ FOR UNIFORM LOAD ON BOTH SPANS

FROM TABLE 1-A 1995 SECTION II D PAGE 104:
ALLOW. STRESS = 18.8 KSI FOR -20° TO 100° F

BENDING: $f_b = M/S$

$M = S(f_b)$
$= 3.576(18,800)$
$= 67229$ #-IN

$67,229 = -w\ell^2/8$
$= -1.75(\ell^2)/8$
$\ell^2 = 307,332$ IN^2
$\ell = 554''$ = MAX. SPACING OF SUPPORTS DUE TO BENDING

SHEAR:

$R_{MAX} = 1.25 w \ell$
$= 1.25(1.75)(554)$
$= 1,212$#

SHEAR $= 1212/A_{PIPE}$
$= 1212/2.231$
$= 543$ PSI < 18800 PSI OK

DEFLECTION:

$\Delta_{MAX} = 0.00541 \frac{w\ell^4}{EI}$
$= 0.00541\left(\frac{1.75(554)^4}{29,000,000(11.85)}\right)$
$= 2.6''$ TOO LARGE N.G.

MAX SPAN FOR 0.5" Δ

$0.5 = 0.00541\left(\frac{1.75(\ell)^4}{29,000,000(11.85)}\right)$

$\ell = 367'' = 30'-6''$

1" STAINLESS LINE:

PROPERTIES:

O.D. = 1" WALL THICKNESS = 0.049" WT = 0.50 #/FT

I.D. = 0.902"

$$I = \pi(d_o^4 - d_i^4)/64 = \frac{\pi(1^4 - 0.902^4)}{64}$$

$$= 0.0166 \text{ IN}^4$$

$$Z = \frac{\pi(d_o^4 - d_i^4)}{32 d_o} = \frac{\pi(1^4 - 0.902^4)}{32(1.0)}$$

$$= 0.0332 \text{ IN}^3$$

$$A = \frac{\pi(d_o^2 - d_i^2)}{4} = \frac{\pi(1^2 - 0.902^2)}{4}$$

$$= 0.1464 \text{ IN}^2$$

$$r = \sqrt{I/A} = \sqrt{\frac{0.0166}{0.1464}}$$

$$= 0.3367$$

$E = 29{,}000{,}000$ psi

$l = 5.0'(12) = 60''$ (LENGTH BETWEEN SPACERS)

CRITICAL BUCKLING RATIO:

$$Z_{CR} = \sqrt{\frac{2\pi^2 E}{\sigma_y}} = \sqrt{\frac{2(\pi)^2(29{,}000{,}000)}{35{,}000}}$$

$$= 128$$

$$Z_{ACT} = l/r = 60/0.3367$$

$$= 178 > 128 \therefore \text{ EULER EQUATION APPLIES}$$

$$P_{CR} = \pi^2 EI/L^2 = \frac{\pi^2(29{,}000{,}000)(0.0166)}{(60)^2}$$

$$= 1320^{\#}$$

3½" + 4" LINE

	3½"	4"
OD	4.00	4.50
I.D.	3.76	4.26

$$I = \frac{\pi(4^4 - 3.76^4)}{64} = 2.76 \text{ IN}^4$$

$$Z = \frac{\pi(4^4 - 3.76^4)}{32(4.0)} = 1.38 \text{ IN}^3$$

$$A = \frac{\pi(4^2 - 3.76^2)}{4} = 1.41 \text{ IN}^2$$

$$\frac{\pi(4.5^4 - 4.26^4)}{64} = 3.96 \text{ IN}^4$$

$$= \frac{\pi(4.5^4 - 4.26^4)}{32(4.5)} = 1.76 \text{ IN}^3$$

$$= \frac{\pi(4.5^2 - 4.26^2)}{4} = 1.65 \text{ IN}^2$$

LINE

BUCKLING

OCT. 8, 2008

$$r = \sqrt{\frac{2.76}{1.46}}$$

$$= 1.38$$

$$P_{CR} = \frac{\pi^2(29{,}000{,}000)(2.76)}{((40(12))^2}$$

$$= 3429\#$$

$$r = \sqrt{\frac{3.96}{1.65}}$$

$$= 1.55$$

$$= \frac{\pi^2(29{,}000{,}000)(3.96)}{((40(12))^2}$$

$$= 4913\#$$

FOR 1" LINE:

$$\Delta L = (304 \times 10^{-5})L$$

$$= 304 \times 10^{-5}(40 \times 12)$$

$$= 1.46''$$

PART B

DESIGN OF THE BAYONET CAM

EXHIBIT A-1

Vacuum Vessel Engineering Note
(per Fermilab ES&H Manual Chapter 5033)

Prepared by	R. J. Woods	Date	11/15/06	Div/Sec	PPD/MECH
Reviewed by		Date		Div/Sec	
Div/Sec Head		Date		Div/Sec	

1. Identification and Verification of Compliance

Fill in the Fermilab Engineering Conformance Label information below:

This vessel conforms to Fermilab ES&H Manual Chapter 5033

Vessel Title	MuCool Bayonet Box
Vessel Number	
Vessel Drawing Number	ME-435320 BAYONET BOX OVERALL ASSEMBLY !!
Internal MAWP	
External MAWP	14.7psi
Working Temperature Range	-20 °F +100 °F
Design/Manufacturer	Fermi Lab - Particle Physics Division
Date of Manufacture	
Acceptance Date	

Director's signature (or designee) if vessel is for manned area and requires an exception to the provisions of this chapter.

Amendment No.	Reviewed by:	Date:

Laboratory location code	
Laboratory property number	
Purpose of vessel	

List all pertinent drawings

Drawing No. (SEE ATTACHED DRAWING LIST) Location of Original

2. Design Verification

Provide design calculations in the Note Appendix.

3. Svstem Venting: Verification

Can this vessel be pressurized either internally or externally? [ ] Yes [X] No
If "Yes", to what pressure? _____

List all reliefs and settings. Provide a schematic of the relief system components and appropriate calculations or test results to prove that the vessel will not be subjected to pressures greater than 110% beyond the maximum allowable internal or external pressure.

Manufacturer	Relief	Pressure Setting	**Flow** Rate	Size
CVI VACUUM SEAL-OFF VALVE # V-1046-31				**1" w/** 1/8 FNPT for TC

4. Operating Procedure Section

Is an operating procedure necessary for the safe operation of this vessel?
[ ] Yes [X] No *(If "Yes", it must be appended)*

Is a testing procedure necessary for the safe acceptance testing (acceptance testing) of this vessel?
[ ] Yes [X] No
If "Yes", the written procedure must be approved by the division head prior to testing and supplied with this Engineering Note.

5. Welding Information

Has the vessel been fabricated in a Fermilab shop? [X] Yes [ ] No
If "Yes," append a copy of the welding ***shop*** *statement of welder* ***qualification.***

6. Exceytional, Existing, Used and Non-Manned Area Vessels

Is this vessel or any part thereof in the above categories? [ ]Yes [X] No
If "Yes" follow the Engineering Note requirements for documentation and append to note.

MuCOOL CRYOGENIC SYSTEM - BAYONET BOX ASSEMBLY

(SIZE)	DWG. NO.	DWG.NAME	QTY.	FAB. IN	FAB. OUT	USED ON
MC-	120572	CHECK VALVE ASSEMBLY				
MD-	435186	bb cc dd 1.50 FEMALE BAY.ASSY - 1" TUBE""				
ME-	435320	**BAYONET BOX OVERALL ASSEMBLY !!**				
MD-	435321	!! OUTER BOX WELDMENT*				
MD-	435322	***OUTER BOX TOP PLATE				
MD-	435323	*OUTER BOX BOTTOM PLATE				
MD-	435324	!! INNER LINER WELDMENT**				
MD-	435325	**INNER LINER TOP PLATE				
MD-	435326	!!**INNER LINER SIDE & END PLATES				
MB-	435327	!! INNER LINER STANDOFF				
ME-	435328	!! OUTER BOX TOP PLATE PIPING				
ME-	435329	!! INTAKE PIPE SUB-ASSEMBLY aa				
MB-	435347	bb dd ADAPTER PLATE, 1.00 OD x .50 ID				
MC-	435349	bb dd DEFLECTOR ASSEMBLYzzz				
ME-	435362	bb dd CONTROL & SHUT-OFF VALVE ASSY.xxx				
MC-	435428	aa SPIDER #1				
MC-	435429	aa SPIDER #2				
ME-	435457	!! LN2 PIPING SUB-ASSEMBLY bb				
ME-	435458	!! 5K PIPING SUB-ASSEMBLY cc				
ME-	435459	!! 14K, 20K PIPING SUB-ASSEMBLY **dd**				
MC-	435460	**dd** SPIRAL TUBE FOR 14K PIPING				
MC-	435461	**dd** SPIRAL TUBE FOR 20K PIPING				
MC-	435462	bb SPIRAL TUBE FOR LN2 PIPING				
MB-	435463	**bb cc dd** ADAPTER PLATE, **2.88** OD x .75 ID				
MB-	435464	**dd** ADAPTER PLATE, **2.88** OD x 1.00 ID				
MB-	435520	aa LN2 SUPPLY PIPE, 4" x 16.50, SCH. 10S				
MB-	435498	aa END PLATE, 4.50 OD x 4.01 ID				

ASME SECTION VIII DIV. 1 APPENDIX 13
FIG. 13-2(a) SKETCH 1

$H = 27.0 - (2(0.625)) = 25.75''$
$L_V = 84''$

$L_V/H = 84/25.75 = 3.26 < 4.0$ 13-4(h) P. 392
> 2.0

∴ DESIGN BASED ON PROVISIONS OF U-2(g) USING ESTABLISHED TECHNIQUES OF STRUCTURAL ANALYSIS.

∴ USE RESULTS OF FINITE ELEMENT ANALYSIS, P8-10 THIS CALCULATION.

MAXIMUM ALLOWABLE STRESS FOR 304 STAINLESS STEEL AT OPERATING TEMPERATURE OF 0°F TO 100°F FROM TABLE ULT-23 FOR WELDED CONSTRUCTION = 20.0 KSI
= 20,000 PSI

MAXIMUM VON MISES STRESS FROM FEA < 18,000 PSI < 20,000 PSI

OK

wet FY STRESS USING "ROARK'S FORMULAS FOR ~+it+ & STRAIN":

EXTERNAL PRESSURE = 14.7 psi
BAYONET = 15# EA
PIPING TO BAYONET = 50# EA.

USING 5/8" THICK STAINLESS PLATE:
DENSITY OF STAINLESS = 0.29 #/IN³ (FROM RYERSON CAT.)
FOR 5/8" PLATE, WT. = 0.29(5/8) = 0.18 #/IN²

WEIGHT OF BAYONET CAN:

LONG SIDES: 84 × 31 × 2 = 5208 IN²
TOP & BOTTOM: 84 × 27 × 2 = 4536 IN²
END PLATES = 31 × 27 × 2 = 1674 IN²
11,418 IN²

TOTAL WEIGHT = 0.18(11,418)
= 2055#

FROM PAGE 464 TABLE 26 CASE 8a:

$a/b = 84/27 = 3.11$

FROM CHART:
@ ∞, $\beta_1 = 0.500$ $\beta_2 = 0.2500$ $\alpha = 0.0284$

$q = 14.7 + 0.18 = 14.88$ psi

MAX σ @ CENTER OF LONG EDGE $= \frac{-\beta_1 q b^2}{t^2}$

$= \frac{0.500(14.88)(27)^2}{(0.625)^2}$

$= -13,885$ psi

MAX σ @ CENTER $= \frac{\beta_2 q b^2}{t^2}$

$= \frac{0.2500(14.88)(27)^2}{(0.625)^2}$

$= 6942$ psi

FROM PAGE 465 TABLE 26 CASE 8b

FROM CHART:

@ ∞, $\beta_1 = 0.067$, $\beta_2 = 1.008$ $\alpha = 0.0791$

MAX σ @ CENTER OF LONG EDGE $= \frac{-\beta_2 W}{t^2}$

$W = 15^{\#} + 50^{\#} = 65^{\#}$

$= \frac{-1.008(65)}{(0.625)^2}$

$= 168$ psi EA LOAD

168 × 7 BAYONETS = 1,176 psi

ν = POISSON'S RATIO (P. 398) $r_b = r_o = 1.0$

MAX σ @ CENTER $= \frac{3W}{2\pi t^2}\left[(1+\nu)\ln\frac{2b}{\pi r_o} + \beta_1\right]$

$= \frac{3(65)}{2(3.14)(0.625)^2}\left[(1+0.29)\ln\left(\frac{2(22)}{3.14(1.0)}\right) + 0.067\right]$

$= 297$ psi

297 × 7 BAYONETS = 2079 psi

TOTAL BENDING STRESS:

@ CENTER OF LONG EDGE:

$\sigma = 13885 + 1,176$

$= \underline{15,061 \text{ psi}}$ < 20,000 psi <u>OK</u>

@ CENTER:

$\sigma = 6942 + 2079$

$= \underline{9021 \text{ psi}}$ < 20,000 psi <u>OK</u>

REINFORCEMENT FOR 6.625" OPENING:
FROM APPENDIX 13-4(j)(1) & 13-4(j)(2) → COMPLY W/ UG 39

FROM UG 39(b)(1):
SHORTEST SPAN = 25.75
∴ THIS SECTION APPLIES SINCE $6.625 < 25.75/2$

$A_{REQ'D} = 0.5dt + tt_n(1-f_{r1})$ WHERE $d = 6.625$
$t = 0.625$
$t_n = 0.134$
$f_{r1} = 1.0$

$= 0.5(6.625)(0.625) + 0.625(0.134)(1-1)$
$= 2.070 \text{ IN}^2$

AREA OF 6"ϕ PIPE:
O.D. = 6.625"
WALL THICKNESS = 0.134
I.D. = 6.625 − (0.134 × 2)
= 6.357"

$A_{PIPE} = \frac{\pi((6.625)^2 - (6.357)^2)}{4} = 2.733 \text{ IN}^2$

$A_{PIPE} > A_{REQ'D}$ OK

CHECK 2½"ϕ PIPE FOR 14.7 PSI EXTERNAL PRESSURE AND REINFORCING LOAD:

REQ'D REINF. AREA = 0.859 IN²
A_{PIPE} = 0.897 IN²
0.038 IN² FOR EXTERNAL PRESSURE

WALL THICKNESS FOR A = 0.859 IN²:
$\pi((2.50)^2 - X^2)/4 = 0.859$
$X^2 = 5.156$
$X = 2.27$

$t = \frac{2.27 - 2.26}{2} = 0.01 \text{ IN}$

$L = 6"$ $D_o = 2.50 + 0.01$

$D_o/t = 2.50/0.01 = 250 > 10$

$L/D_o = 6.00/2.50 = 2.4$

FROM FIG. G P622 SECTION II PART D:
FACTOR A = 0.0001

FROM FIG. HA-1 p628 SECTION II PART D:

SINCE VALUE OF A FALLS TO LEFT OF MATERIAL/TEMPERATURE LINE, USE:

$$= \frac{2AE}{3(D_o/t)} \qquad E = 28.0 \times 10^6$$

$$= \frac{2(0.0001)(28{,}000{,}000)}{4(awl}$$

$$= 74.7 \text{ psi}$$

$$74.7 > 14.7 \quad \underline{ok}$$

2½"ϕ PIPE OK FOR VACUUM & REINFORCING OPENING.

CHECK 6"ϕ PIPE FOR 14.7 PSI EXTERNAL PRESSURE AND REINFORCING LOAD:

REQ'D REINF AREA = 2.070 IN²

A_{PIPE} = 2.733 IN²

0.663 IN² FOR EXTERNAL PRESSURE

WALL THICKNESS FOR A = 2.070:

$$\pi((6.625)^2 - (x)^2)/4 = 2.070$$

$$x^2 = 41.255$$

$$x = 6.423$$

$$t = (6.423 - 6.357)/2$$

$$= 0.033 \text{ IN}$$

$L = 12''$, $D_o = 6.625$, $t = 0.033$

$D_o/t = 6.625/0.033 = 200.76$

$L/D_o = 12/6.625 = 1.811$

FROM FIG G P622 SECTION II PART D:

FACTOR A = 0.00025

FROM FIG. HA-1 p626 SECTION II PART D:

FACTOR B = 3500

$$P_a = 4B/3(D_o/t)$$

$$= 4(3500)/3(200.76)$$

$$= 23.2 \text{ PSI} > 14.7 \text{ PSI} \quad \underline{ok}$$

6"ϕ PIPE OK FOR VACUUM & REINFORCING OPENING

WELDS @ OPENINGS:

FOR 1 5/8 & 2 1/4 OPENINGS:

FROM UW-15(b)(2) p. 129 STRENGTH CALCULATIONS FOR NOZZLE ATTACHEMENT WELDS FOR PRESSURE LOADING ARE NOT REQ'D FOR OPENINGS THAT ARE EXEMPT FROM THE REINFORCEMENT REQUIREMENTS BY UG-36(c)(3) SINCE VESSEL NOT SUBJECT TO RAPID FLUCTUATIONS IN PRESSURE AND ARE LESS THAN 2 3/8" DIAMETER.

FOR 2 3/4" ϕ OPENINGS:

SECTION II PART D TABLE 1A FOR TEMP -20 F TO 100F:

S = ALLOWABLE STRESS OF VESSEL MATERIAL = 18,800

S_n = ALLOWABLE STRESS OF NOZZLE MATERIAL = 18,800

STRENGTH OF NOZZLE NECK: d_m = MEAN ϕ OF NOZZLE, t_n = NOZZEL WALL THICKNESS

$$\text{NOZZLE WALL SHEAR} = \frac{\pi d_m}{2} \times t_n \times 18{,}800(0.70)$$

$$d_m = (2.75 + (2.75 - 2(0.120)))/2$$

$$= 2.63''$$

$$\frac{\pi(2.63)}{2} \times 0.120 \times 18{,}800(0.7)$$

$$= 6524 \text{ psi}$$

d_o = OD OF NOZZLE

$$\text{FILLET WELD SHEAR} = \frac{\pi d_o}{2} \times \text{WELD SIZE} \times 18{,}800(0.49)$$

$$= \frac{\pi(2.75)}{2} \times 1/8 \times 18{,}800(0.49)$$

$$= 4974 \text{ psi} < 6524 \text{ psi} \quad \text{N.G.}$$

ADD 1/8" PARTIAL PENETRATION GROVE WELD TO INTERIOR DIAMETER OF PIPE

$$= \frac{\pi(2.75 - 2(0.120))}{2} \times 1/8 \times 18{,}800(0.60)$$

$$= 5559 \text{ psi}$$

$$5559 + 4974 = 10\,553 \text{ psi} > 6524 \quad \underline{\underline{\text{ok}}}$$

FOR 6.625" OPENING:

NOZZLE WALL SHEAR = $\frac{\pi d_m}{2} \times t_n \times 18{,}800(0.70)$

$d_m = 6.625 + (6.625 - 2(0.134))/2$
$= 6.491$

$\frac{\pi(6.491)}{2} \times 0.134 \times 18{,}800(0.70)$ -

$= 17{,}980$ psi

FILLET WELD SHEAR = $\frac{\pi d_o}{2} \times$ WELD SIZE $\times 18{,}800(0.49)$

$= \frac{\pi(6.625)}{2} \times 1/8 \times 18800(0.49)$

$= 11{,}983$ PSI $< 17{,}980$ N.G.

ADD 1/8" PARTIAL PENETRATION GROOVE WELD TO INTERIOR DIAMETER OF PIPE

$= \frac{\pi(6.625 - 2(0.134))}{2} \times 1/8 \times 18{,}800(0.60)$

$= 14080$ psi

$11983 + 14080 = 26063$ psi > 17980 psi

OK

VACUUM RELIEF CALCULATION, CONTINUED ON PAGES 11 & 12 THIS SECTION.

Fermi National Accelerator Laboratory
PPD / Mechanical Support / Engineering Analysis

Stress and Displacement of Bayonet Box Top Plate

Zhijing Tang
October 18,2006

Bayonet outer box top plate is 84 inch long, 25.75 inch wide, and 0.62 inch thick. It is made of stainless steel 304. There are quite a few holes drilled on it. It is subjected to vacuum pressure load. Besides that, on seven top row 2.25 inch holes each has 50 lb weight. We calculate the load on each hole as follows:

$$f = \frac{\pi}{4n} D^2 P_0$$

Where D is the diameter of the hole, P_0 = 14.5 psi is the atmosphere pressure, n is the number of nodes on the hole, **f** is force on each node. 1 hole of D = 6.5 in, n = 32, **f** = 15 lb; 5 holes of D = 1.625 in, n = 16, **f** = 1.88 lb; 3 holes of D = 2.75 in, n = 24, **f** = 3.6 lb; 7 holes of D = 2.25 in, n = 24, **f** = 2.4 lb; 7 holes of D = 2.25 in, n = 24, plus 50 lb weight, **f** = 4.5 lb.

Boundary conditions are simply supported but no rotations. Conditions on the holes are divided into two cases: One without constraint, and one rotation at hole is set to zero. Stress and displacement are calculated for each case. The real situation may lies between these two cases.

		Max Disp (in)	Max stress (psi)
1	No constraint	0.02764	11549
2	No rotation	0.01124	23748

The maximum stress of 23748 psi in the second case may seem a little too large. This is mainly due to the over constraint at the hole. The real boundary condition at hole may rest between these two extreme cases, and we expect the maximum stress below 18000 psi.

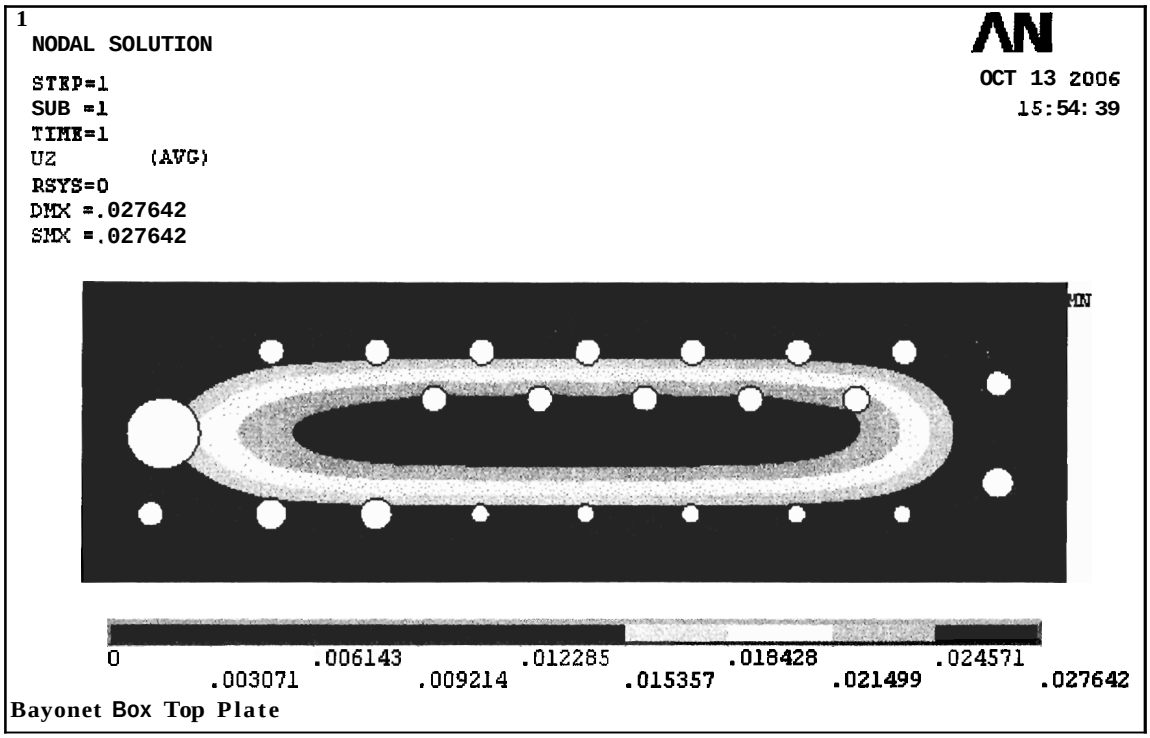

Bayonet Box Top Plate

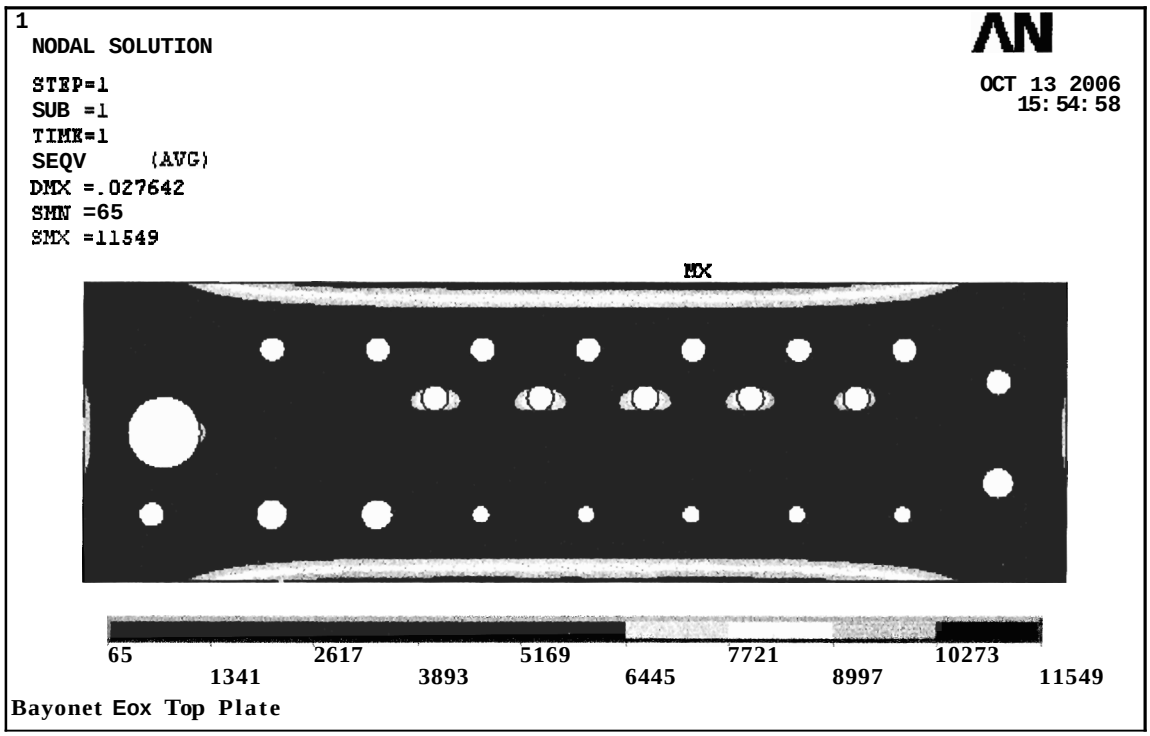

Bayonet Eox Top Plate

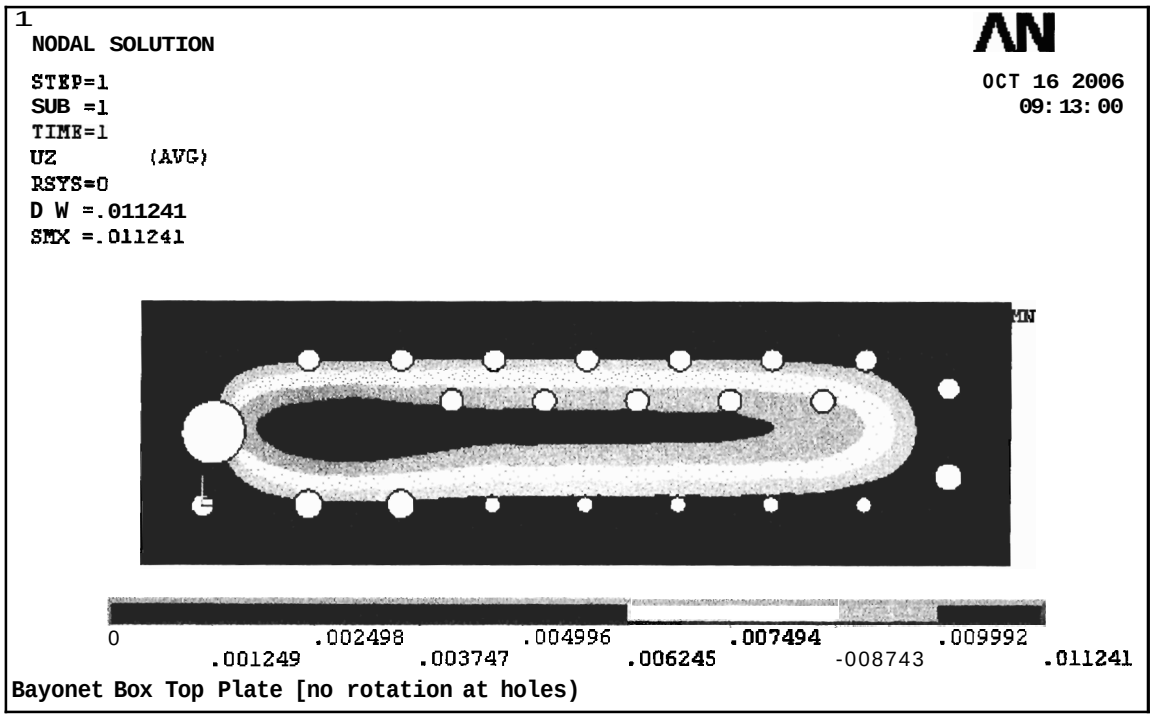
1
NODAL SOLUTION
STEP=1
SUB =1
TIME=1
UZ (AVG)
RSYS=0
D W =.011241
SMX =.011241
AN
OCT 16 2006
09:13:00
MN
0
.001249
.002498
.003747
.004996
.006245
.007494
-008743
.009992
.011241
Bayonet Box Top Plate [no rotation at holes)

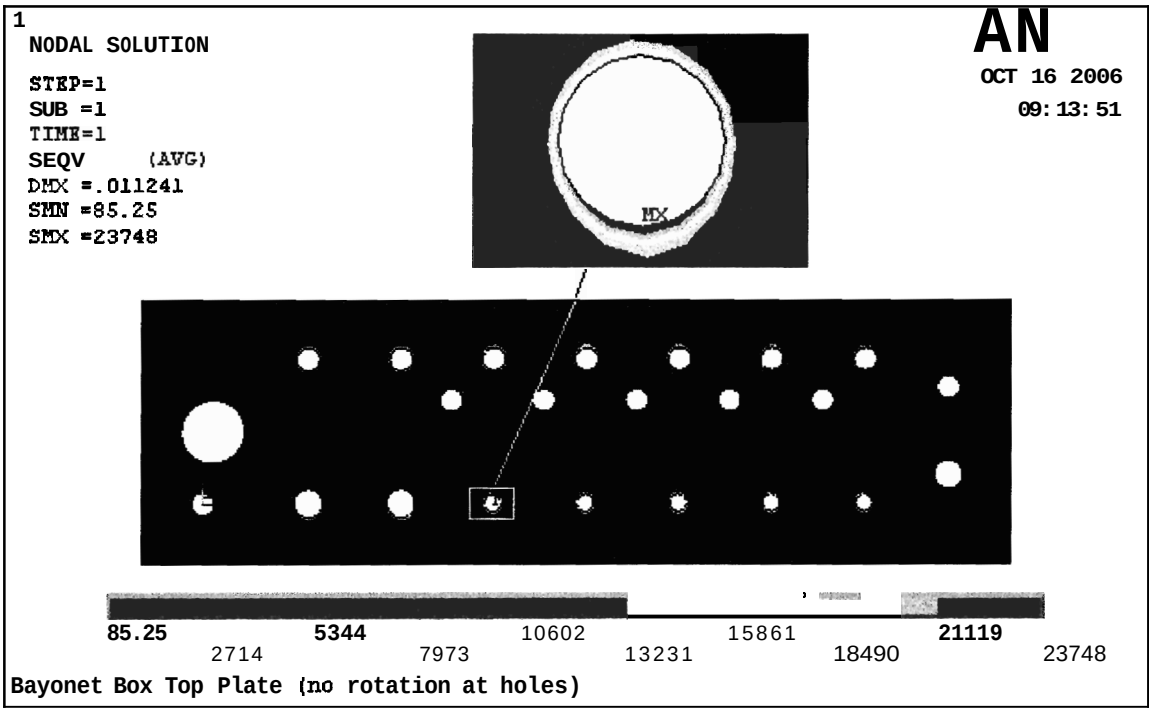
1
NODAL SOLUTION
STEP=1
SUB =1
TIME=1
SEQV (AVG)
DMX =.011241
SMN =85.25
SMX =23748
AN
OCT 16 2006
09:13:51
MX
85.25
2714
5344
7973
10602
13231
15861
18490
21119
23748
Bayonet Box Top Plate (no rotation at holes)

$$A = \frac{F \cdot \sqrt{T \cdot Z}}{C \cdot K \cdot P_1 \cdot K_b \cdot \sqrt{M}} = \frac{1100 \cdot \sqrt{(-288+460) \cdot 1}}{356 \cdot 0.795 \cdot [(65+14.7) \cdot 1.1] \cdot 1 \cdot \sqrt{29}} = 0.108_\text{in}^2$$

7.A.2.e. No additional (except tanker fill) external sources exist to pressurize the dewars. Plant production will not bring the dewar's pressure over 65 psig since the Nitrogen Plant is limited at 65 psig with 20k dewars pressure reliefs.

7.A.3. As it is shown above in §7.A.2.a through §7.A.2.d the flow capacity of each of the relief is sufficient to ensure that the vessel pressure will not exceed 110% of MAWP for fire, loss of vacuum, and pumping overfill combined. Then the stamped rupture disk pressure at 70 deg.F must be less than 150%(MAWP+15)-15 = 120 psig. The installed rupture disks are 2" BS&B type RB-90 set at 95 psig.

7.A.4. Dewar has nine (9) 4" parallel plate reliefs for vacuum jacket. The discharge area for each relief is 7.069 in^2, and total available area is 63.62 in^2, which is more than the area required. The minimum required discharge area for vacuum reliefs installed on the dewar should be (according to CGA-341 6.2.4.):

$$A_{min} = 0.00024 \cdot capacity_{water} = 0.00024 \cdot \overbrace{11{,}000}^{\text{gallons}} \cdot 8.345 \frac{lb}{gal} = 22.03_\text{in}^2$$

7.A.5. There is no rupture disk installed for the vacuum vessel.

7.A.6. The inlet and vent piping of relief devices provide for proper performance. 11k dewars have two sets of identical relief devices with 2" Worcester diverter valve incorporated into the flow path. The losses in the inlet piping are shown in §7.A.2.b. The vent losses are 0.725 psi for 4399 lb/hr of saturated gas flow @ 15 psia, plus 0.08 psi for 18,752 lb/hr of saturated liquid @ 15 psia.

LIQUID PIPELINE SIZING SUMMARY

VALUES OF PIPELINE SEGMENT		FITTINGS	NO.	EQ FT
GALLONS/MIN	46	90 DEG SHORT RAD	1	4.1
POUNDS/HR	18752	90 DEG LONG RAD	0	0.0
DENSITY, LB/CU.FT	50.43	45 DEG ELBOW	0	0.0
VISCOSITY, CP	0.15	180 DEG ELBOW	0	0.0
TEMP, DEG.F.	-320.0	TEE THRU	0	0.0
HEAD LOSS, FT	0.2	TEE BRANCH	0	0.0
INTERNAL DIA.,IN.	2.469	PIPE ENTRANCE	0	0.0
VELOCITY, FT/SEC	3.1	PIPE EXIT	1	10.6
PIPE EPSILON,IN	0.0018	GATE/BALL VALVES	0	0.0
REYNOLDS NUMBER	320255	BUTTERFLY VALVES	0	0.0
FRICTION FACTOR	0.019349	GLOBE VALVES	0	0.0
PIPE LENGTH, FT	1.0	CHECK VALVES	0	0.0
EQUIVALENT FT	15.7	REDUCTN DIA,IN,	0.0	0.0
PSI DROP/100 FT	0.4963	ENLARGE DIA,IN.	0.0	0.0
TOTAL PSI DROP	0.08	MISC EQUIV.FT.		0.0

Box

$27.00 \cdot 29.38 \cdot 84.00 = 66633.84\ IN^3$

$66633.84 \div 1728 = 38.56\ FT^3$

$38.56 \cdot 7.481 = 288.47\ GAL$

$.00024 \cdot 288.47 \cdot 8.345 = .578\ IN^2$ RELIEF AREA

CAN

$\phi 24.0 \times 34.00$ LG.

$\pi r^2 h$

$\pi \cdot 144 \cdot 34 = 4896$

$4896 \div 1728 = 2.833$

1.167 DISHED HEADS

$4.00\ FT^3$

$4.0 \cdot 7.481 = 29.924\ GAL$

$.00024 \cdot 29.924 \cdot 8.345 = .060\ IN^2$ RELIEF AREA

XFER LINE

$\phi 6.63 \times 1200$ LG.

$\pi r^2 h$

$\pi \cdot 10.99 \cdot 1200 = 13187.07$

$13187.07 \div 1728 = 7.63$

$7.63 \cdot 7.481 = 57.08\ GAL$

$.00024 \cdot 57.08 \cdot 8.345 = .114\ IN^2$ RELIEF AREA

$.578 + .060 + .114 = .752\ IN^2$ TOTAL RELIEF AREA

CRYOLAB V-1046 $= .7854\ IN^2 \cdot 2 = 1.5708\ IN^2$

22-141 50 SHEETS
22-142 100 SHEETS
22-144 200 SHEETS
AMPAD

LOADS:

VACUUM PRESSURE = 15 PSI
BAYONET = 15# EA.
LINE TO BAYONET = 50# @ EA. BAYONET

ASSUME 5/8" THICK STAINLESS PLATE

DENSITY OF STAINLESS = 0.29 #/IN³ (FROM RYERSON CAT.)

0.29 (5/8) = 0.18 #/IN²

WEIGHT OF BAYONET CAN ASSUMING 5/8" STAINLESS STEEL:

LONG SIDES: 84" × 31" × 2 = 5208#
TOP & BOTTOM: 84" × 27" × 2 = 4536#
END PLATES: 31" × 27" × 2 = 1674 IN²
11,418 IN²

0.18 (11,418) = 2055#

TOP PLATE:

VACUUM LOAD = 15.0 PSI PLATE WT. = 0.18 PSI
BAYONET LOAD + STINGER & PIPE = 15# + 50# = 65#

FROM ROARK & YOUNG:

TABLE 26 PAGE 464, CASE 8a

MAX σ = $-\beta_1 q b^2 / t^2$ a/b = 72/27 = 2.7

= 0.5000 (15.18)(27)²/0.625² β @ 2.0 = 0.4974

= -14,165 PSI β @ ∞ = 0.5000

ALONG EDGE USE β_1 = 0.5000

TABLE 26 PAGE 464 CASE 8b

MAX σ = $-\beta_2 W / t^2$ $r'_o = r_o = 2''/2 = 1.0''$

= -1.008 (65)/0.625² β_2 = 1.008

= - 168 PSI FOR EA. LOAD

FOR 7 LOADS:

7(168) = 1,176 PSI

TOTAL NEG. STRESS @ CENTER OF LONG EDGE =

14,165 + 1,176 = **15,341 PSI**

ALLOWABLE LOAD FROM ASME BOILER & PRESSURE VESSEL CODE PART D, TABLE 1-A PAGE 108 = 18.8 KSI FOR SA 304 SS = 18,800 PSI > 15,341 PSI ok

USE 5/8" PLATE

VERIFY RESULTS FINITE ELEMENT ANALYSIS
MODELED BY Z. TANG. SEE FOLLOWING PAGES
FOR REPORT. MAXIMUM STRESS < 16,549 PSI
(IGNORE LOCAL STRESS AROUND OPENINGS)

MAX. ALLOW. STRESS = 18,800 PSI OK

Fermi National Accelerator Laboratory
PPD I Mechanical Support I Engineering Analysis

Valve Box under Vacuum Pressure

Zhijing Tang

February 11,2005

The valve box under vacuum pressure is analyzed using finite element method. The box is 72 inch long, 27 inch wide and 31 inch high. The material is 5/8 inch stainless steel 304. There are seven tubes with diameter 2 inch on the top, each weighs 15 lbs. In addition to that there is 50 lbs load on each tube plus vacuum suction. So the total load on each hole is about 111 lbs.

Fig.1 is the stress plot, Fig. 2 is the total displacement and Fig.3 is the z-direction displacement.

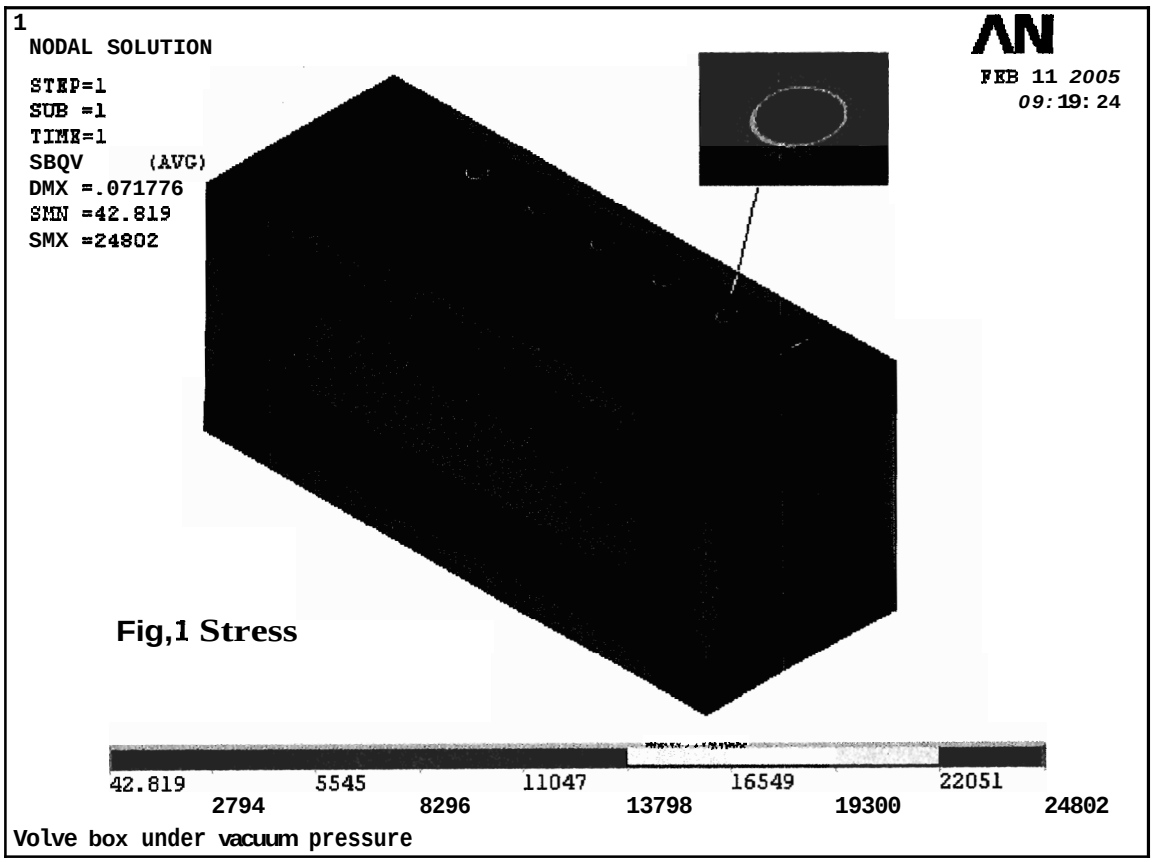

Fig,1 Stress

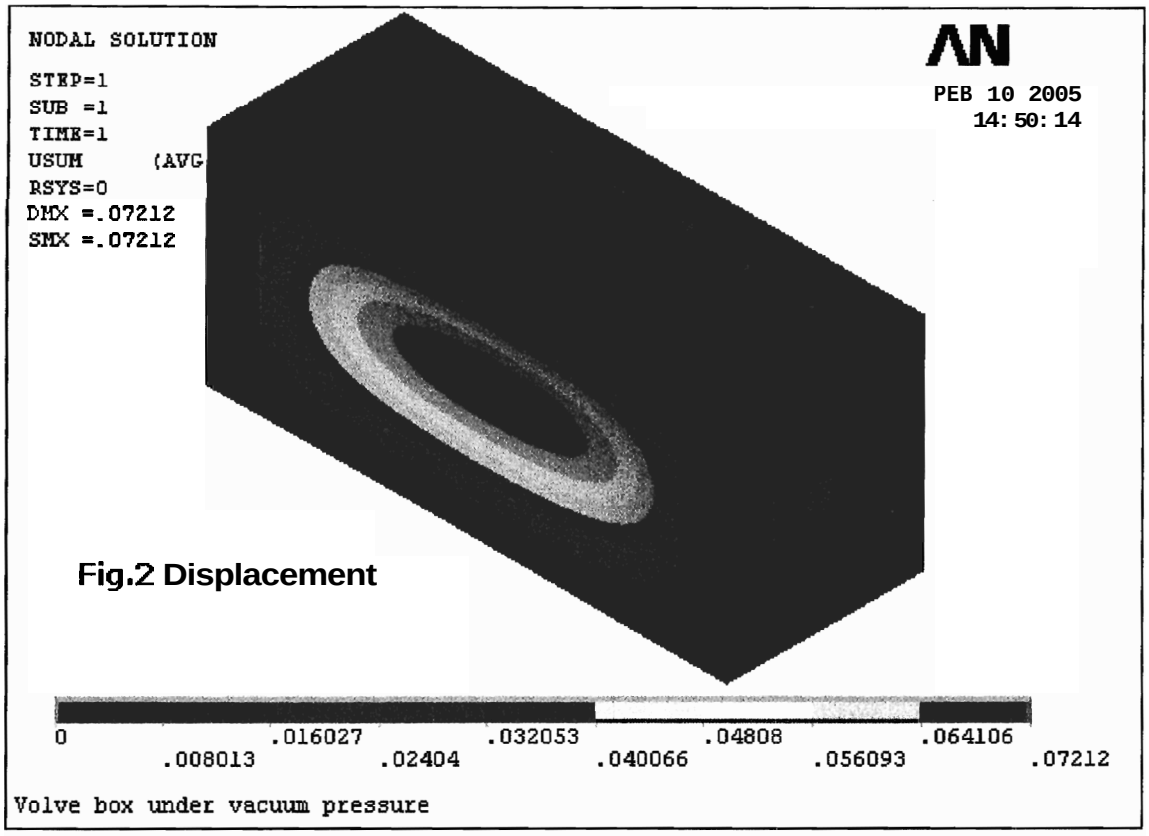

Fig.2 Displacement

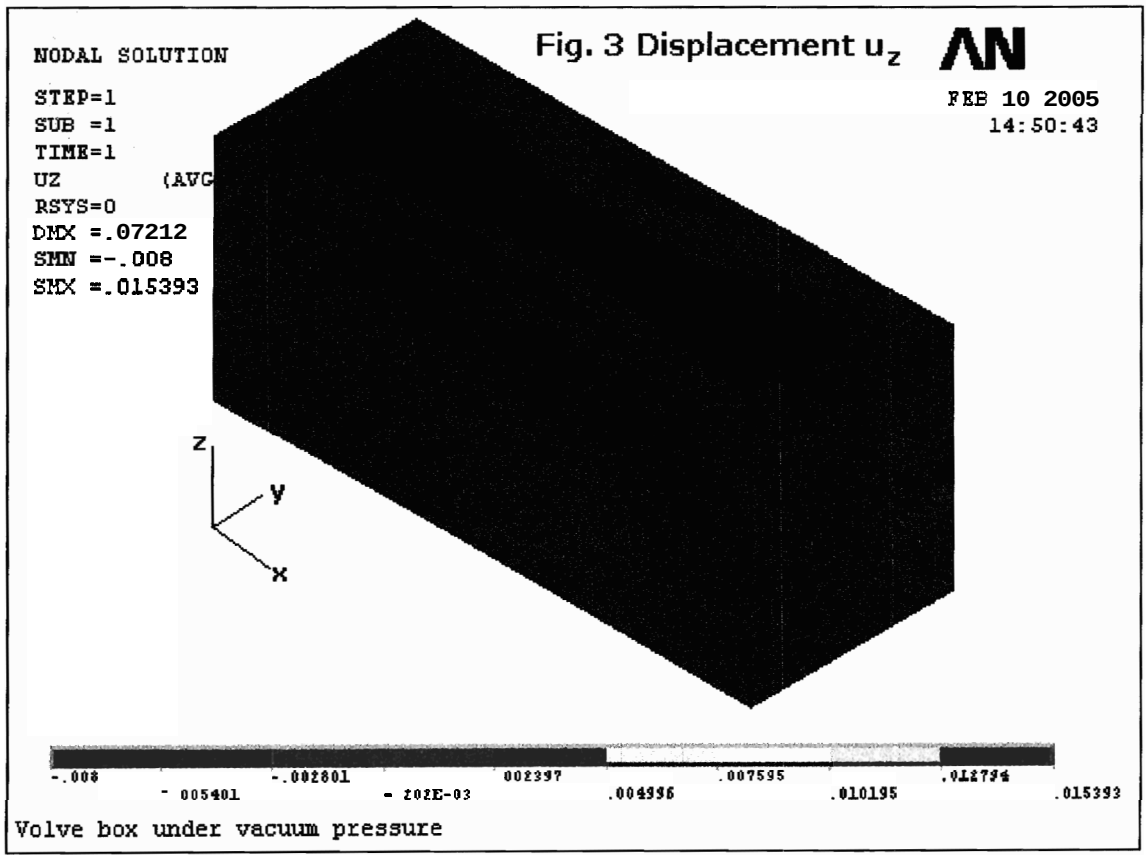

Fig. 3 Displacement u_z

TABLE ULT-23
MAXIMUM ALLOWABLE STRESS VALUES IN TENSION FOR 5%, 8%, AND 9% NICKEL STEELS, TYPE 304 STAINLESS STEEL, AND 5083-0 ALUMINUM ALLOY AT CRYOGENIC TEMPERATURES FOR WELDED AND NONWELDED CONSTRUCTION

5% Nickel Steels Plates: SA-6452				8% and 9% Nickel Steels Plates? SA-353, SA-553 Type I, and SA-553 Type II Pipes and Tubes: SA-333 Grade 8 and SA-334 Grade 8 Forgings: SA-522			
Temperature,[1] °F	Nonwelded Construction, ksi	Welded Construction[3] UTS 100 ksi	Welded Construction[3] UTS 95 ksi	Temperature,[1] °F	Nonwelded Construction, ksi	Welded Construction UTS 100 ksi	Welded Construction UTS 95 ksi
-320	37.7	34.0	32.3	-320	38.4	34.0	32.3
-300	34.5	33.2	31.6	-300	37.2	33.2	31.6
-250	32.4	31.8	30.3	-250	34.8	31.8	30.3
-200	31.5	30.6	29.1	-200	32.6	30.6	29.1
-150	30.2	29.3	27.8	-150	30.6	29.3	27.8
-100	28.8	28.1	26.7	-100	29.0	28.1	26.7
- 50	27.4	27.1	25.8	- 50	27.7	27.1	25.8
0	23.7	23.7	23.7	0	25.0	25.0	23.7
100	23.7	23.7	23.7	100	25.0	25.0	23.7

TYPE 304 STAINLESS STEEL

Spec. No.	Grade	Specified Minimum Strengths at Room Temperature: Tensile, ksi	Yield, ksi	Maximum Allowable Stress, ksi, for Temperatures,[1] °F, Not Exceeding: -320	-300	-250	-200	-150	-100	-50	0	100
SA-240	304	75.0	30.0	20.7	20.6	20.3	20.0	19.7	19.4	19.1	18.8	18.8

LIFTING LUGS:

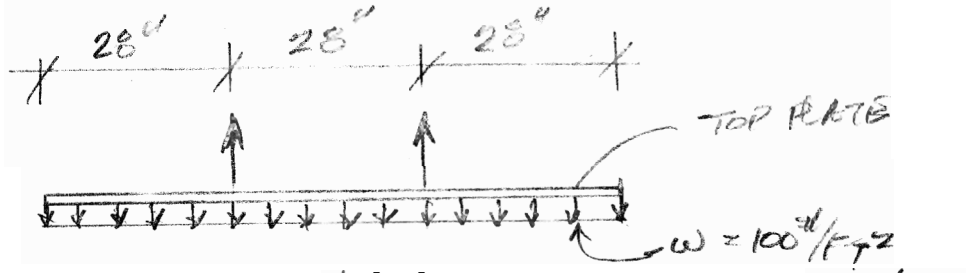

SECTION **A–A**

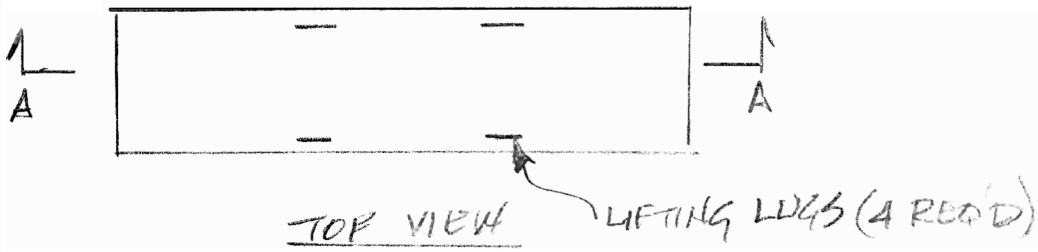

TOP VIEW

$M_R = -0.694(28)/2 = -9.72$ #-IN

$M_C = W/8\,(L-4a)$

$= 0.694(84)/8\,(84-4(28))$

$= -204$ #-IN

MAX BENDING STRESS $= 204/0.065$

$= 3139$ psi $< 18{,}800$ psi

OK

LOAD PER LUG:

$(84(25.75)(0.694))/4 = 375$ #/LUG

DESIGN LUG FOR 1500# LOAD

SAFETY FACTOR $= 1500/375$

$= 4.00$

MIN. SLING ANGLE = 45°

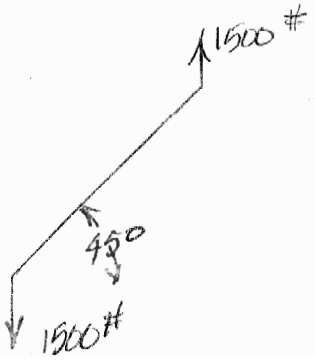

HORIZ LOAD = 1500 (1/TAN 45)
= 1500(1)
= 1500 #

FOR WEAK DIRECTION LOAD:
CENTER OF LUG OPENING = 1.25 ABOVE BASE
MOMENT = 1.25(1500)
= 1875 #-IN

FOR 3/4" THICK PL, 3" LONG:

$S_y = 3(0.75)^2/6$
$= 0.281 \text{ IN}^3$

$f_b = 1875/0.281$
$= 6,673 \text{ psi} < 18,800 \text{ psi}$ ok

REQUIRED WELD:

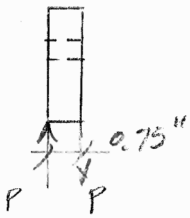

$P = 1875/0.75 = \pm 2500^{\#}$

FOR 1/4" WELD 3" LONG,

TENSION:
$0.60 F_y = 0.60(35,000)$
$= 21,000 \text{ psi}$

$0.707(21,000)(1/4) = 3,712^{\#}/\text{IN}$

OMITTING 1ST 1/2" & LAST 1/2" WELD:
ALLOW. $P = (3" - 2(0.5"))(3712)$
$= 7,424^{\#} > 1875^{\#}$ ok

SHEAR:
$0.3(.707)(35,000)(1/4) = 1856^{\#}/\text{IN}$

OMITTING 1ST 1/2" & LAST 1/2" WELD:
ALLOW. $P = (3" - 2(0.5"))(1856)$
$= 3712^{\#} > 1875^{\#}$ ok

COMBINED LOADING :

SHEAR + TENSION $1875/3712 + 1875/7424 \overset{?}{\leq} 1.0$

$0.505 + 0.253 \overset{?}{\leq} 1.0$

$0.758 < 1.0$ ok

USE 1/4" FILLET WELD
FULL LENGTH BOTH SIDES.

TEAR OUT SHEAR @ HOLE

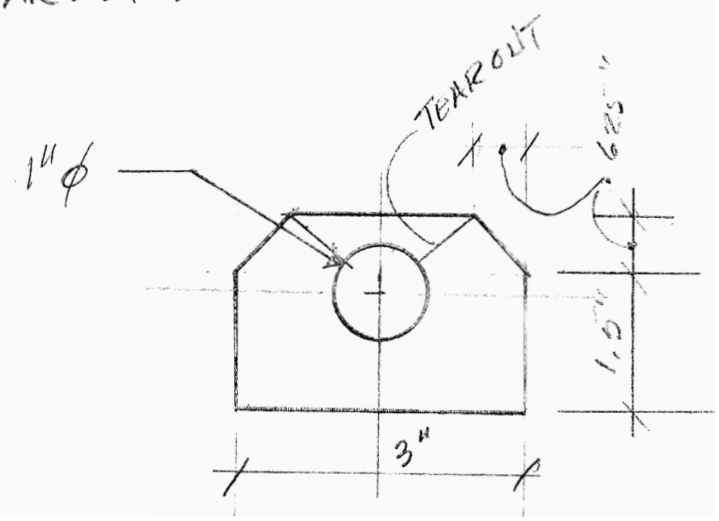

SHEAR AREA = 3/4 (3/4) = 0.5625"

ALLOW. SHEAR = 0.40 Fy = 0.4 (35000)
= 14000 PSI

14,000 (0.5625) × 2 SIDES = 15750 #
> 1500# ok

CHECK LUG FOR CAPACITY TO CARRY COMPLETE BOX LOAD

OUTSIDE BOX:

2 SIDES @ 84(29.38)(2) = 4936
BOTTOM @ 84(27.25) = 2289
2 ENDS @ 29.38(27.25)(2) = 1601
8826 IN²

FOR 5/8" THICK PLATE:

5/8(8826) = 5516 IN³

FOR 304 STAINLESS:

5516(0.694) = 3828#

TOP PLATE & PIPING = 1500#
5328#
+ MISC. 500#
5828# SAY 6000#

LOAD/LUG = 6000/4
= 1500#

FOR 2-1 SAFETY FACTOR, USE 3000# LOAD

WEAK AXIS BENDING:

M_y = 1.25(3000) = 3750#-IN

f_b = 3750/0.281 = 13345 psi < 18,800 psi ok

TEAR OUT SHEAR = 15700# ALLOW. > 3000# ok

WELD SIZE MUST BE INCREASED, TRY 5/16"

ALLOW. SHEAR = 0.3(0.707)(35000)(5/16) = 2320#/IN
ALLOW. P = 2320(3 - 2(0.5")) = 4640#

ALLOW TENSION = 0.707(21,000)(5/16) = 4640#/IN
ALLOW P = 4640(3 - 2(0.5")) = 9280#

3000/4640 + 3000/9280 = 0.970 < 1.0 ok

USE 5/16" FILLET WELD

PART C

COOL DOWN CALCULATIONS FOR CONTRACTION OF THE ONE INCH TUBING WITHIN THE BAYONET BOX

5K SUPPLY (FIGURE I)

$\Delta L = (304 \times 10^{-5}) L$

$= (304 \times 10^{-5})(9.4)''$

$= 0.029''$

.049" WALL TUBING

$I_{TUBE} = 0.049087 (d^4 - d_i^4)$

$= 0.049087 (1^4 - 0.9^4)$

$= 0.0166 \text{ IN}^4$

$y = Pl^3/3EI$

$y(3EI)/l^3 = P$

FIX @ PT "A"

$\frac{0.029(3)(28 \times 10^6)(0.0166)}{(19+29)^3} = 0.37\#$

$M = 0.37(19+29) = 17.6 \#\text{-IN}$

$f_b = Mc/I = 17.6(0.5)/0.0166$

$= 528 \text{ psi}$ ok

FIX @ PT. "A"

$\Delta L = (304 \times 10^{-5})(19+29)$

$= 0.15''$

$y(3EI)/l^3 = P$

$\frac{0.15(3)(28 \times 10^6)(0.0166)}{(9.4)^3} = P$

$252\# = P$

$M = 252(9.4) = 2369 \#\text{-IN}$

$f_b = Mc/I = 2369(0.5)/0.0166$

$= 71{,}400$ PSI N.G TOO LARGE

(SEE REVISION ON PAGE 5)

5K RETURN (FIGURE I)

$\Delta L = 304 \times 10^{-5}(7.7 + 3.0 + 7.7)$

$= 0.056''$

FIX @ PT "A"

$\frac{0.056(3)(28 \times 10^6)(0.0166)}{(19+29)^3} = 0.71\#$

$M = 0.71(19+29) = 34 \#\text{-IN}$

$f_b = 34(0.5)/0.0166 = 1024 \text{ psi}$ ok

CHECK BOTTOM ELBOW @ PT. "B"

$$\frac{(0.056/2)(3)(28\times10^6)(0.0166)}{(7.7^3+3.0^3+7.7^3)} = 42\#$$

$$M = 8.458(42) = 355\#\text{-IN}$$

$$f_b = 355(0.5)/0.0166 = 10{,}700\ \text{psi}\ \underline{\underline{\text{OK}}}$$

CHECK VERT. CONTRACTION

$$\Delta L = (19+29)(304\times10^{-5}) = 0.15''$$

$$\frac{0.15(3)(28\times10^6)(0.0166)}{(7.7+3.0+7.7)^3} = P$$

$$= 33.6\#$$

$$M = 33.6(7.7+3.0+7.7) = 618\#\text{-IN}$$

$$f_b = 618(0.5)/0.0166 = 18{,}622\ \text{psi} < 18{,}800\ \text{psi}$$

$\underline{\underline{\text{OK}}}$

14K SUPPLY (FIGURE IV)

$\Delta L = 26(304 \times 10^{-5}) = 0.08''$

$y(3)EI/\ell^3 = P$

$\frac{0.0166(.08)(3)(28 \times 10^6)}{(19)^3} = 16\#$

@ PT. C:

$M = 16(19) = 304$ #-IN

$f_b = Mc/I = 304(0.5)/0.0166$

$= 9{,}157$ PSI ok

$y(3)EI/\ell^3 = P$

$0.0166(0.08)(3)(28 \times 10^6)/(9^3 + 21^3 + 12^3 + 19^3)$

$= 6.00\#$

@ PT. C:

$M = 6.00(19) = 114$ #-IN

$f_b = 114(0.5)/0.0166 = 3{,}434$ PSI ok

BETWEEN VALVES:

$\Delta L = 9(304 \times 10^{-5}) = 0.0274$

$P = y(3)(EI)/\ell^3 = \frac{\left(\frac{0.0274}{2}\right)(3)(28 \times 10^6)(0.0166)}{(20)^3}$

$= 2.38\#$

$M = 2.38(20) = 47.6$ #-IN

$f_b = 47.6(0.5)/0.0166 = 1434$ PSI ok

14K SUPPLY (CON'T) (FIGURE III)

$\Delta L = 44.4\,(304 \times 10^{-5}) = 0.135''$

$y(3)(EI)/(\ell)^3 = P$

$3(0.0166)(0.135)(28 \times 10^6)/(29^3 + 18^3) = 5.77\#$

$M = 5.77(18+29) = 271\ \#\text{-IN}$

$f_b = 271(0.5)/0.0166 = 8168$ psi ok

$y(3)(EI)/\ell^3 = P$

$3(0.0166)(0.135)(28 \times 10^6)/(9^3 + 18^3 + 9^3) = 25.8\#$

$M = 25.8(24) = 620\ \#\text{-IN}$

$f_b = 620(0.5)/0.0166 = 18{,}675$ PSI ok

WITHIN 10% ok

20K RETURN (FIGURE II)

$\Delta L = 37.4\,(304 \times 10^{-5}) = 0.114''$

$y(3)(EI)/(\ell)^3 = P$

$3(0.0166)(0.114)(28 \times 10^6)/(29^3 + 22^3) = 4.54\#$

$M = 4.54(22+29) = 232\ \#\text{-IN}$

$f_b = 232(0.5)/0.0166 = 6974$ psi ok

$y(3)(EI)/\ell^3 = P$

$3(0.0166)(0.114)(28 \times 10^6)/(9^3 + 18^3 + 9^3) = 21.8\#$

$M = 21.8(28) = 610\ \#\text{-IN}$

$f_b = 610(0.5)/0.0166 = 18{,}390$ psi

WITHIN 10% ok

REVISED DESIGN FOR 5K SUPPLY (FIGURE I)

$$\Delta L = (304 \times 10^{-5})(19 + 29)$$
$$= 0.15''$$

$$y(3EI)/\ell^3 = P$$

$$\frac{0.15(3)(28 \times 10^6)(0.0166)}{(4.88 + 4.5 + 6.0 + 6.0)^3} = P$$

$$21.4^{\#} = P$$

$$M = 21.4(9.4) = 201\ \#\text{-IN}$$

$$f_b = Mc/I = 201(0.5)/0.0166$$
$$= 6060\ \text{psi}\ \underline{\underline{\text{ok}}} \quad < 18{,}800\ \text{psi}$$

SEE FIGURE V

Mucooler LN2 Box Tubing Contraction Analysis

Section Length between ends	X (width)	Y (height)	Z (length)
	-9.75	-11.25	-71.5
	19.5	-10.75	76.5
	-10	13.218	-76.5
	7	13.032	76.5
			-66.75
Effective length between fixed ends	6.75	4.25	-61.75

Stainless steel tubing properties

cte =	1.10E-05	per K
E =	2.80E+07	psi
OD =	1	inch
ID =	0.902	inch
wall t =	0.049	inch
I =	0.0165939	inch^4
L =	26.25	inch

ΔT = 216 K

AX, inch	Ay, inch	AZ, inch	Resultant, AL, due to AX and AZ
0.016038	0.010098	-0.146718	0.147592 inches

WORST CASE ANALYSIS

Assuming all AL occurs at the outlet tubing that has the longest L of 26.25".
This displacement will create a cantilever-mode bending stress on the tubing at top wall connection.

Force P created due to displacement AL, (P = 3*E*I*ΔL/L^3), =	11	lb
Bending moment, M, created (M = P*L) =	299	inch-lb
Bending stress, S (S = M*(OD/2)/I), =	8,996	psi

Allowable stress, Fb, for 304 stainless steel tubing = 18,800 psi

AS BENDING STRESS IS < THE ALLOWABLE STRESS, TUBING WILL BE OK.

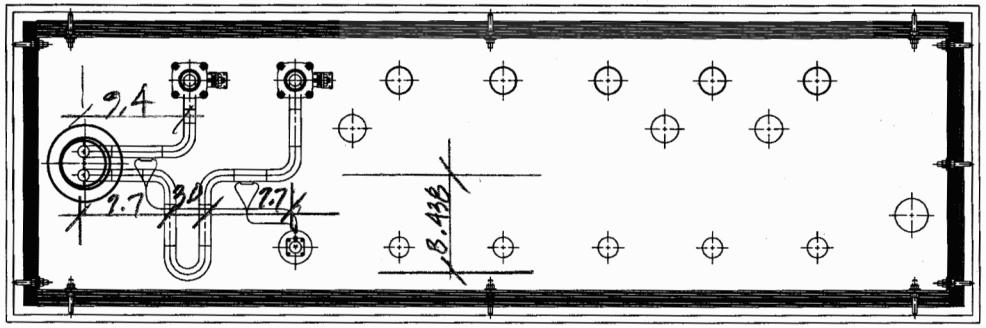

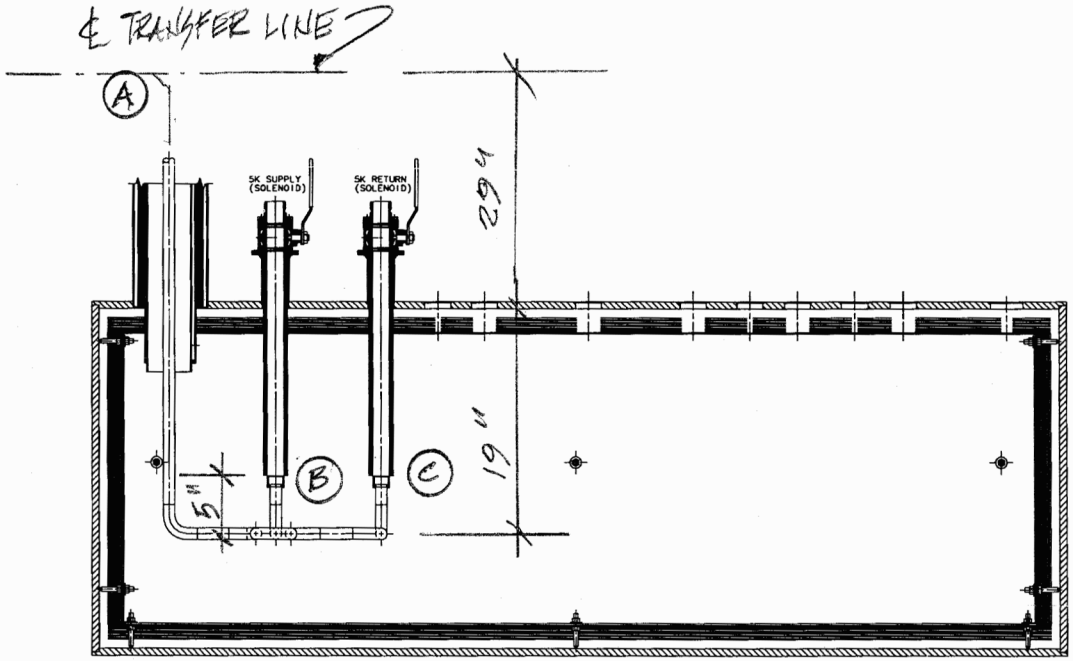

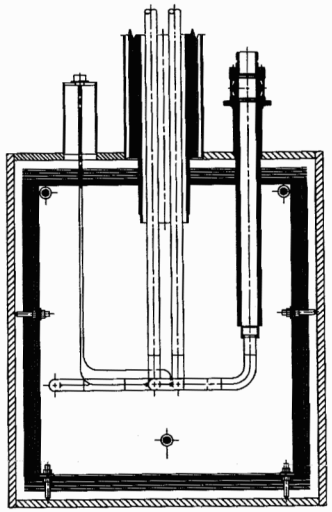

FIGURE I

REV	DESCRIPTION

		DATE
DRAWN		DATE
APPROVED		DATE

UNLESS OTHERWISE SPECIFIED
1. BREAK ALL SHARP EDGES
2. DO NOT SCALE DRAWING.
3. STANDARDS BASED UPON
4. MAX. ALL MACH. SURFACES
5. DRAWING UNITS:

ORIGINATOR
DRAWN
CHECKED
APPROVED
USED ON
MATERIAL

FERMI NATIONAL ACCELERATOR LABORATORY
UNITED STATES DEPARTMENT OF ENERGY

SCALE | DRAWING NUMBER | SHEET 1 OF 1 | REV

CREATED WITH : | GROUP:

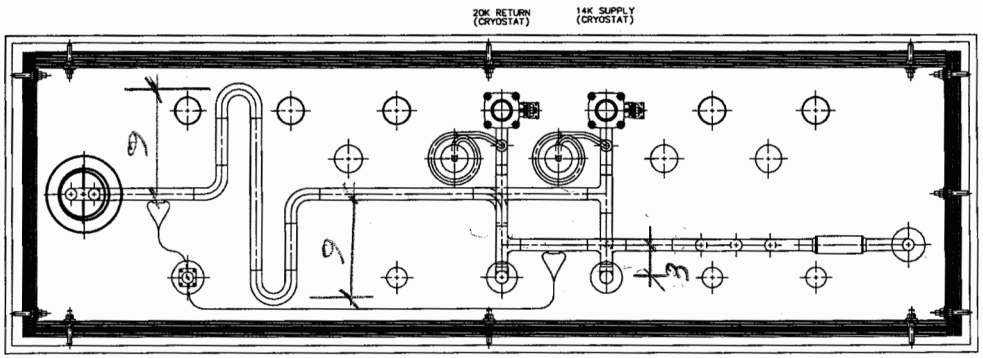

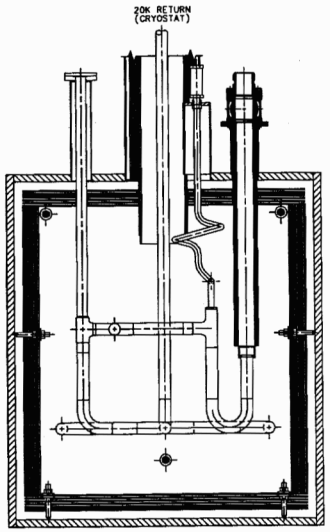

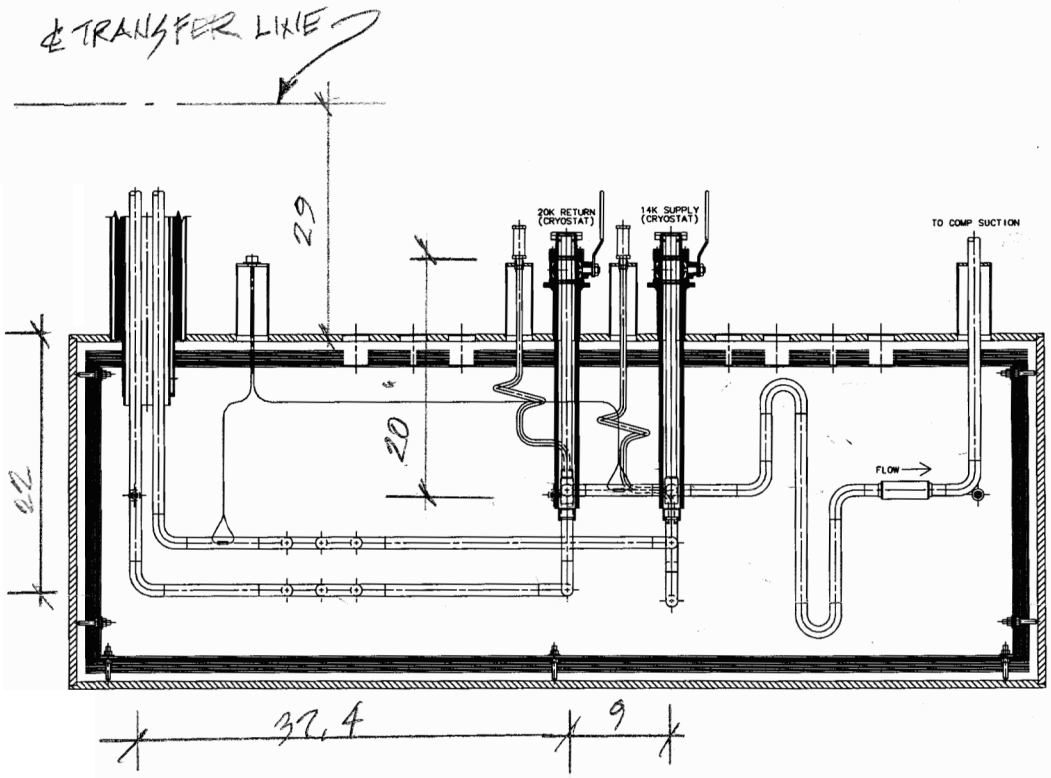

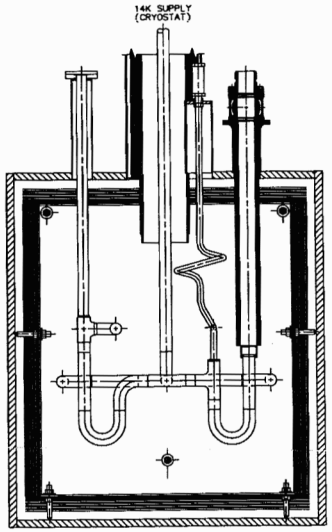

FIGURE II

REV	DESCRIPTION	DRAWN	DATE
		APPROVED	DATE

UNLESS OTHERWISE SPECIFIED
1. BREAK ALL SHARP EDGES AND
2. DO NOT SCALE DRAWING
3. DIMENSIONS BASED UPON
4. BRK. ALL MACH. SURFACES
5. DRAWING UNITS:

DESIGNATOR
DRAWN
CHECKED
APPROVED
USED ON
MATERIAL

FERMI NATIONAL ACCELERATOR LABORATORY
UNITED STATES DEPARTMENT OF ENERGY

SCALE | DRAWING NUMBER | SHEET 1 OF 1 | REV

CREATED WITH : | GROUP:

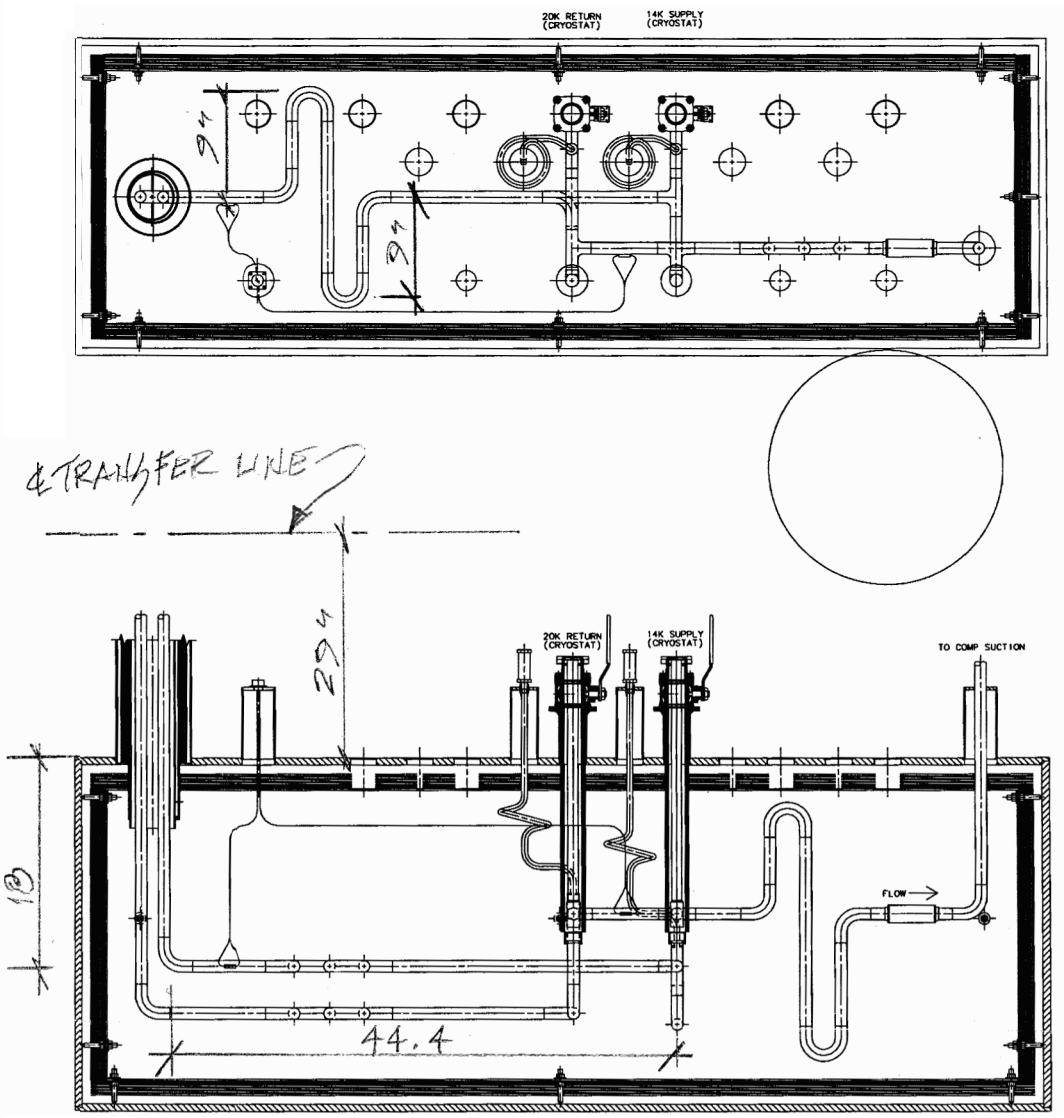

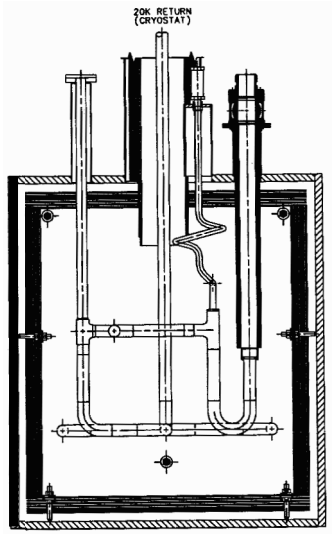

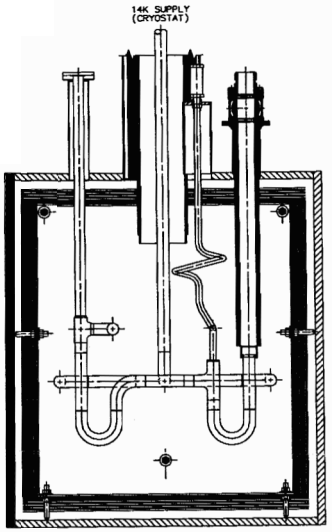

FIGURE III

REV	DESCRIPTION	DRAWN	DATE
		APPROVED	DATE

UNLESS OTHERWISE SPECIFIED
1. BREAK ALL SHARP EDGES MAX.
2. DO NOT SCALE DRAWING.
3. DIMENSIONS BASED UPON
4. MAX. ALL MACH. SURFACES
5. DRAWING UNITS:

ORIGINATOR
DRAWN
CHECKED
APPROVED
USED ON
MATERIAL

FERMI NATIONAL ACCELERATOR LABORATORY
UNITED STATES DEPARTMENT OF ENERGY

SCALE | DRAWING NUMBER | SHEET 1 OF 1 | REV

CREATED WITH: | GROUP:

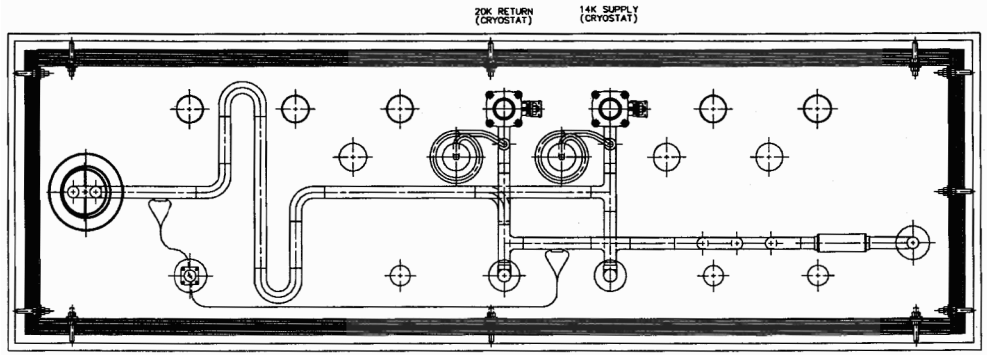

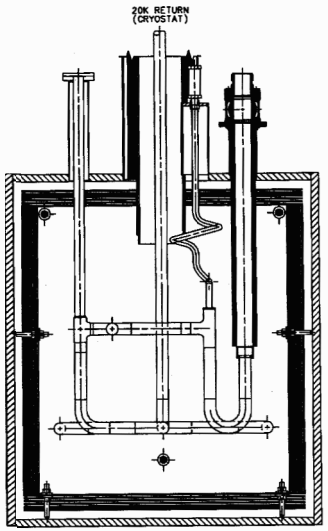

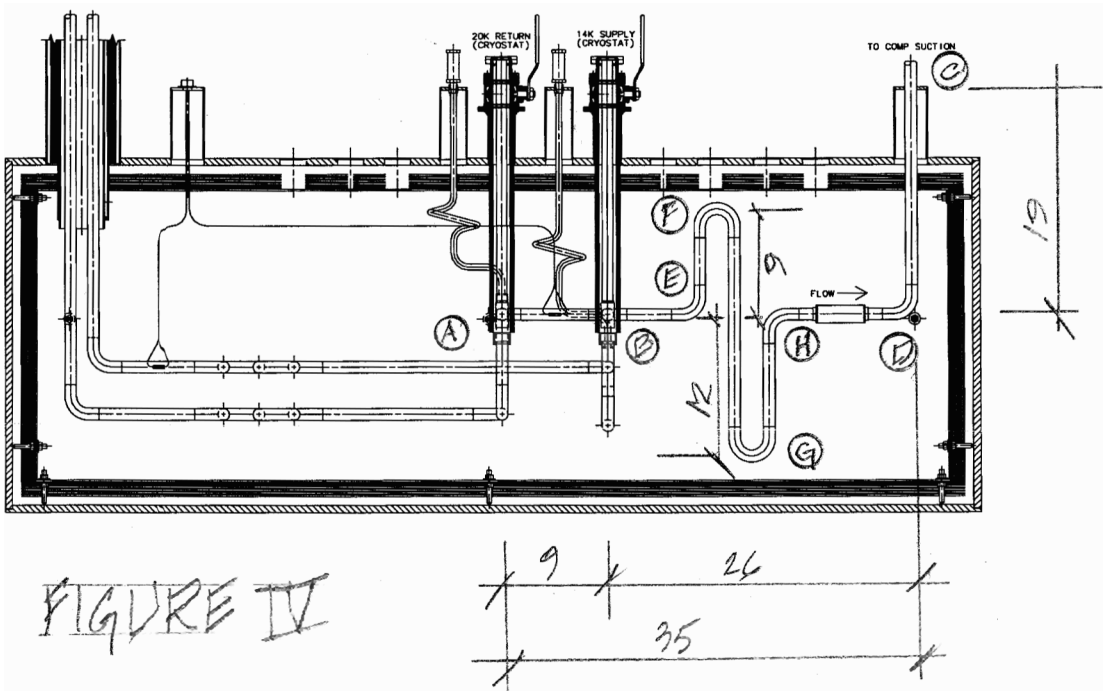

FIGURE IV

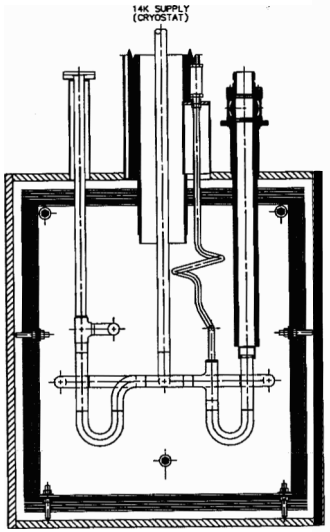

UNLESS OTHERWISE SPECIFIED
1. BREAK ALL SHARP EDGES
2. DO NOT SCALE DRAWING.
3. DIMENSIONS BASED UPON
4. MAX. ALL MACH. SURFACES
5. DRAWING UNITS:

ORIGINATOR
DRAWN
CHECKED
APPROVED
ISSUED ON
MATERIAL

FERMI NATIONAL ACCELERATOR LABORATORY
UNITED STATES DEPARTMENT OF ENERGY

SCALE | DRAWING NUMBER | SHEET 1 OF 1 | REV

CREATED WITH : | GROUP :

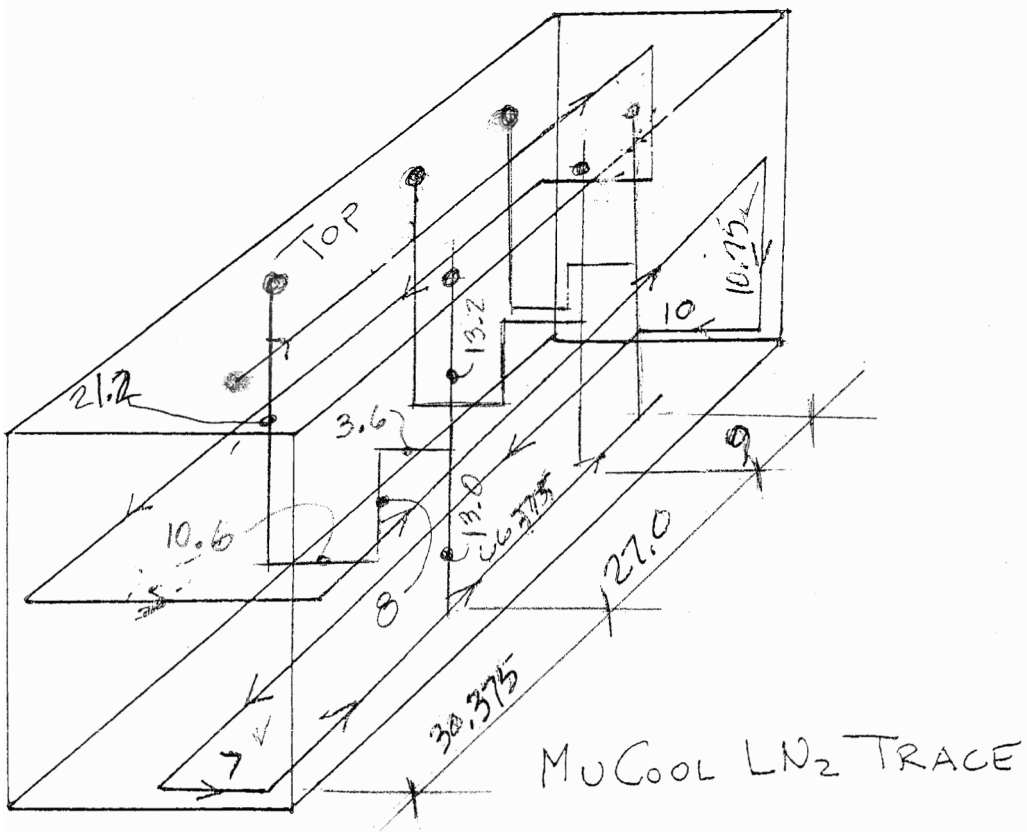

FIGURE V

PART D

COOL DOWN CALCULATIONS FOR CONTRACTION OF THE ONE INCH TUBING WITHIN THE TRANSFER LINE

THERMAL CONTRACTION:
FOR 5K LINE:

$T_{ROOM} = 68°F = 293°K$

FROM "BUBBLE CHAMBER GROUP SELECTED CRYOGENIC DATA" HANDBOOK:
TABLE IX-W-1.2 FOR 304 STAINLESS

$$\frac{L_{293} - L_T}{L_{293}} = 300 \times 10^{-5}$$

$$\frac{30' - L_T}{30'} = 300 \times 10^{-5}$$

$$L_T = 29.91'$$

$$L_{293} - L_T = 30.0 - 29.91$$
$$= 0.09'$$
$$= \underline{\underline{1.08''}}$$

FROM SENIOR FLEXONICS INC. "FLEXIBLE METAL HOSE AND FITTINGS" P. 17, FOR 1" I.D. HOSE AND "Y" OFFSET = 1¼" O.A. LENGTH = FROM 10¾" TO 8¾".

<u>USE 18" LONG FLEX HOSE</u>

PART E

HEAT TRANSFER CALCULATIONS FOR BAYONET BOX SHIELD

CHECK TEMP. GRADIENT DIFFERENCE BETWEEN [illegible] & SHIELD

COPPER SHIELD = 1/8" O.F.H.C. COPPER
FROM BROOKHAVEN DATA BOOK, CONDUCTIVITY @ 80°K = 4.9 W/cm °K

C TO C SPACING OF STRAP = 22.6" = 57.4 cm
DISTANCE FROM TOP/STRAP TO T/ SHIELD = 9.4" = 23.88 cm
STRAP WIDTH = 2.5 cm

STRAP LENGTH = $\sqrt{3.3^2 + 1.5^2}$ = 3.625" = 9.21 cm

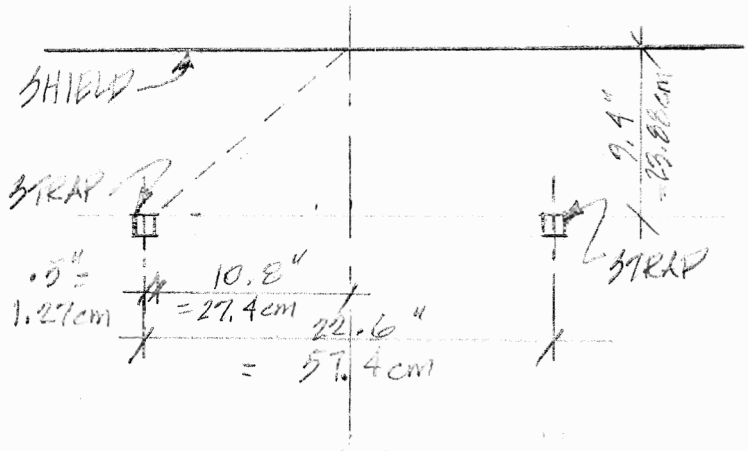

FIN LENGTH = $\sqrt{27.4^2 + 9.4^2}$ = 28.97 cm
FIN THICKNESS = 1/8" = 0.3175 cm

$T_0 - T_L = \frac{C \times L^2}{2 \times k \times t_h}$ WHERE T_0 = TEMP @ COOLING TUBE
T_L = TEMP @ LENGTH L
C = HEAT GAIN PER UNIT AREA
= 6.8 W/ft² = 0.00023 W/cm²
L = FIN LENGTH
k = THERMAL CONDUCTIVITY OF FIN
t_h = FIN THICKNESS

LN2 = 80°K = T_0

$80°K - T_L = \frac{0.00023(28.97)^2}{2(4.9)(.3175)}$

$80°K - T_L = 0.062$
$T_L = 79.94°K$

HEAT GAIN @ TUBE THROUGH STRAP.

AREA PER STRAP FROM SKETCH ABOVE:
WIDTH = 22.6" = 57.4 cm
HEIGHT = 24.75" = 62.87 cm

A = 57.4(62.87) = 3609 cm²

$T_0 - T_L = \frac{0.00023(3609)}{2(4.9)(0.3175)} = 0.270°$ < 5°K ok

CHECK STRAP @ SMALL END OF BAYONET BOX

END DIMENSIONS

WIDTH = 21.75" = 55.25 cm

HEIGHT = 24.75" = 62.87 cm

$A = 55.25(62.87) = 3474\ cm^2$

$$T_0 - T_L = \frac{0.00023(3474)}{2(4.0)(0.3175)} = 0.25^\circ K < 5^\circ K$$ OK

THERMAL CONDUCTIVITY INTEGRALS
for COPPERS

Comments: The six curves were extrapolated to 300°K. The curve for G.F.H.C. was extrapolated to 4°K and the curve for (Pb)Cu was extrapolated to 6°K. It is estimated that the extrapolated values do not deviate more than 10% from the probable values.

$$Q = \frac{A}{L} \int_{T_o}^{T_L} \lambda \, dT; \qquad Q \frac{L}{A} = \int_{T_o}^{T_L} \lambda \, dT$$

Where:

- Q = heat flow in watts
- A = cross sectional area in cm^2
- L = length in cm
- λ = thermal conductivity in watts/cm-°K
- T = temperature in °K
- T_o = initial temperature (6°K for [Pb]Cu and [Te]Cu; 4°K for all other coppers)

Thermal Conductivity Integrals are on following page.

Temp. °K	Thermal Conductivity watts/cm-°K					
	Hi-Purity Annealed	Coalesced	Elect. T.P.	O.F.H.C.	(Pb) Cu	(Te) Cu
4	70	6.2	3.2	2.4*		
6	96	10.	4.8	3.7*	2.7*	2.2
8	120	14.	0.3	4.7*	3.6*	2.6
10	134	17.5	7.8	6.0*	4.5*	3.4
15	120	23	11	8.5*	6.3*	5.0
20	83	24	13	11 *	8 *	6.5
25	60	23	14	12	9.2	7.3
30	40	22	14	12	9.6	7.8
35	28	18.5	13	11	9.5	7.9
40	20	15	11.5	10	9	7.7
50	12	10	8.8	7.7	6.9	6.8
60	8.0	7.8	7.0	6.2	5.5	5.8
70	6.2	6.5	5.9	5.5	4.7	5.2
76	5.7	6.0	5.5	5.2	4.5	4.9
80	5.2	5.7	5.2	4.9	4.3	4.6
90	4.7	5.1	4.7	4.7	4.0*	4.3
100	4.5	4.8	4.5	4.5	3.8*	4.2
120	4.3	4.5	4.3	4.3	3.7*	4.0
140	4.2	4.3	4.2	4.2	3.6*	3.8
160	4.1	4.2	4.1	4.1	3.6*	3.8
180	4.0	4.2	4.0	4.0	3.6*	3.8
200	4.0	4.2	4.0	4.0	3.6*	3.8
250	4.0	4.2*	4.0	4.0	3.6*	3.8*
300	4.0*	4.2*	4.0*	4.0*	3.6*	3.8*

* Extrapolated Values

PART F

DESIGN OF A STRUCTURE TO SUPPORT THE BAYONET BOX

BAYONET CAN WT. = 2055# + 7(15+50)
= 2510#

PLATFORM LOADS:

FRAMING = 5.0 #/FT²
LIVE LOAD = 100 #/FT² (AISC HNL DESIGN LOADS)
105#/FT² = 0.73#/IN²

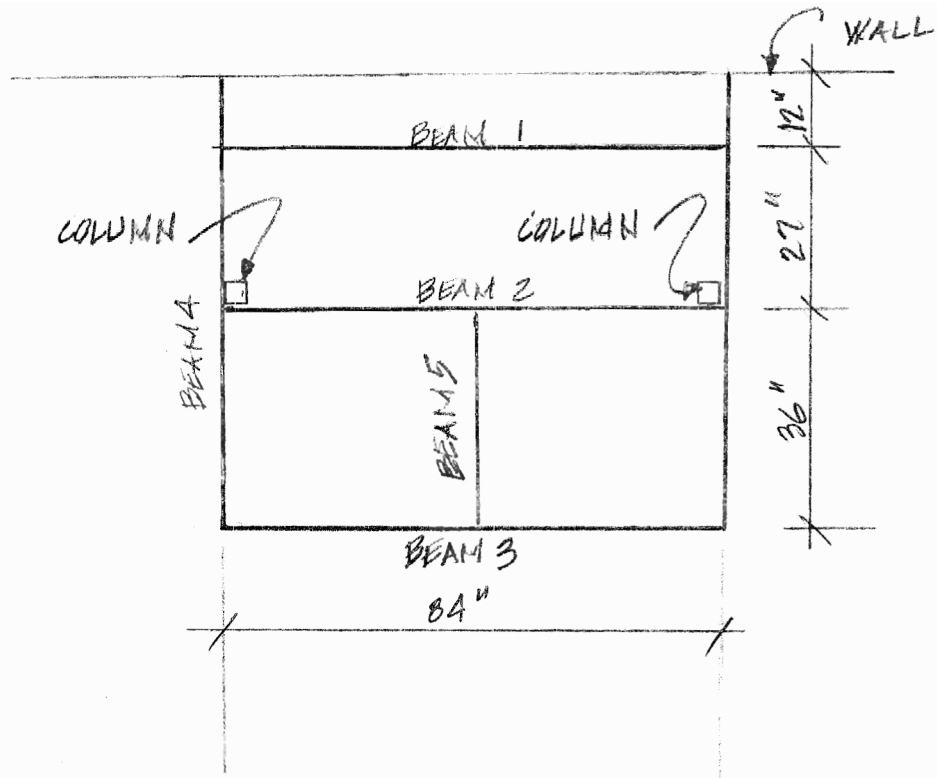

BEAM 1

$w = 27/2(0.73) = 9.9$ #/IN

$R_L = R_R = \frac{9.9(84)}{2}$
$= \underline{\underline{416\#}}$

$M = wl^2/8 = \frac{9.9(84)^2}{8}$
$= 8732$ #-IN

BEAM 2

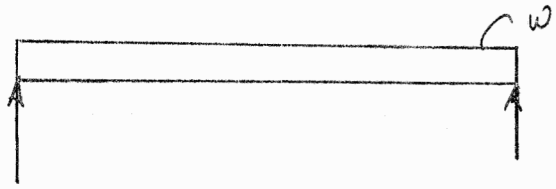

$w = 27/2(0.73) + (2510/2)/84$
$= 24.8$ #/IN

$R_L = R_R = \frac{24.8(84)}{2}$
$= \underline{\underline{1042\#}}$

$M = 24.8(84)^2/8$
$= 21874$ #-IN

BEAM 3

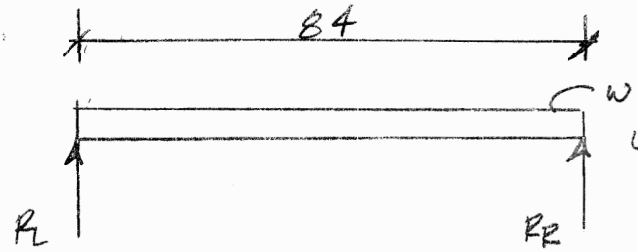

$w = (2510/2)/84$
$= 14.9$ #/IN

$R_L = R_R = 14.9(84)/2$
$= \underline{\underline{626\#}}$

$M = 14.9(84)^2/8$
$= 13,142$ #-IN

DESIGN ALL 3 BEAMS FOR LOADS OF BEAM 2:

$R = 1042\#$, $M = 21,874$ #-IN

TRY C4x5.4 $S_x = 1.93$ $A = 1.59$ $I_x = 3.85$

$b/t = 1.584/0.296 = 5.35$ $65\sqrt{36} = 390$

$390 > 5.35$ ∴ COMPACT SECTION

$76bf/\sqrt{Fy} = 76(1.584)/\sqrt{36} = 20.06'' < 84$

$$\therefore F_b = \frac{12 \times 10^3 C_b}{ld/A_f} \leq .60 F_y$$

$$= \frac{12 \times 10^3 (1)}{84(8.52)} = 16.8 \text{ KSI} = 16,800 \text{ psi}$$

$f_b = 21874/1.93 = 11,334$ psi $< 16,800$ psi $\underline{\underline{ok}}$

$F_v = 0.40(36) = 14.4$ KSI $= 14,400$ psi

$f_v = 1042/1.59 = 655$ psi $< 14,400$ $\underline{\underline{ok}}$

BEAM 4

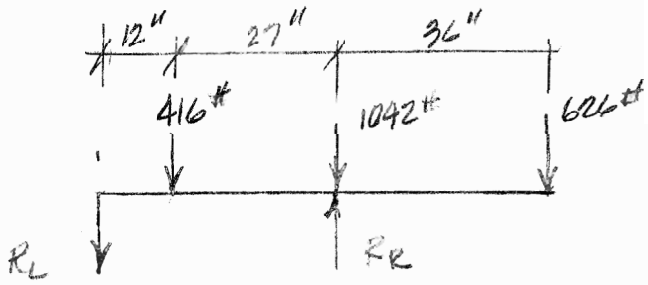

$$R_R = \frac{75(626) + 39(1042) + 12(416)}{39}$$

$$= 2373.8\#$$

$$R_L = \frac{-27(416) + 36(626)}{39}$$

$$= 289.8\#$$

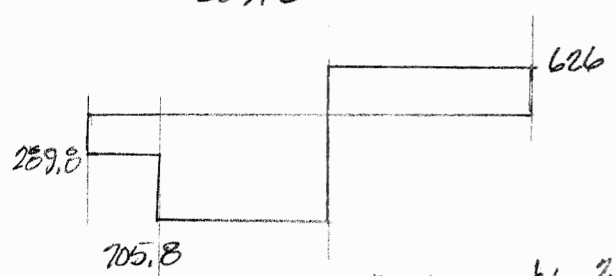

$M = 289.8(12) + 705.8(27)$
$= 22,534$ #-IN

TRY C8×11.5 $S_x = 8.14$ $A = 3.38$ $I_x = 32.6$ $b/t = 2.26/0.390 = 5.795$
< 350 (SEE BEAM #4)
$\therefore$ COMPACT SECTION

$L_c = 76\,bf/\sqrt{36} = 76(2.26)/\sqrt{36} = 28.63 < 36$

$\therefore F_b = \frac{12\times10^3 C_b}{ld/A_f} \le .60F_y = \frac{12\times10^3(1)}{36(9.08)} = 36.7$ USE $0.6(36) = 21.6$

$f_b = 22,534/8.14 = 2768$ psi $< 21,600$ psi OK

$F_v = 0.40(36) = 14.4$ KSI $f_v = 2373.8/3.38 = 702$ psi $< 14,400$ psi OK

$\Delta_{MAX} = 0.626(36)^3/3(29,000)(32.6)$ 0.01" OK

COLUMN

$P = 2373.8\#$ SAY $2500\#$ COLUMN LENGTH $\approx 80"$

TRY 4×4×5/16 TUBE $r = 1.54$ $A = 4.36$ IN²

$Kl/r = 2(80)/1.54 = 104 < 200$ OK

$f_a = 2500/4.36 = 573$ psi

APPLIED 10% HORIZ. LOAD @ TOP OF COLUMN

$M = 2500(0.10)(80) = 20,000$ #-IN

$f_b = 20,000/4.79 = 4,175$ psi

$$L_c = \left(1950 + 1200\frac{M_1}{M_2}\right) b/r_y = 1950\,(4)/46 = 170'' > 80''$$ ok

$$F_b = 0.66\,F_y = 0.66(46) = 30.4\text{ KSI} = 30{,}400\text{ PSI}$$

$$F_a = \frac{\left[1 - \frac{(Kl/r)^2}{2C_c^2}\right]46}{5/3 + \frac{3(Kl/r)}{8C_c} - \frac{(Kl/r)^3}{8C_c^3}} \qquad C_c = 111.6 \text{ (p. 5-120 AISC)}$$

$$= \frac{\left[1 - \frac{(104)^2}{2(111.6)^2}\right]46}{5/3 + \frac{3(104)}{8(111.6)} - \frac{(104)^3}{8(111.6)^3}} = \frac{26.03}{1.915} = 13.59\text{ PSI}$$

$$f_a/F_a + f_b/F_b \le 1.0$$

$$573/13{,}590 + \frac{4175}{30{,}400} = 0.180 < 1.0$$ ok

USE TS 4×4×5/16

COLUMN BASE PL: $F_p = 0.35\,f'_c$ (AISC p 3-107)
$= 0.35(3000)$
$= 1050$ PSI

FOR 7.5"×7.5" PL, $P = 1050(7.5)^2 = 59{,}000\#$
$> 2500\#$ ok

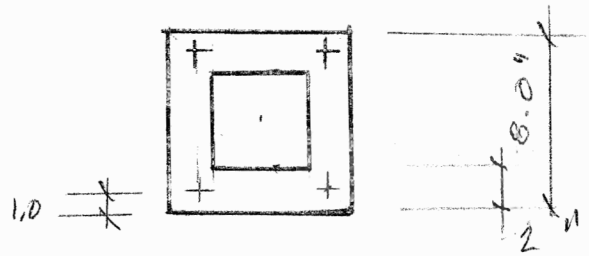

$$m = \frac{(8.0 - .95d)}{2} = \frac{(8.0 - .95(4))}{2} = 2.10''$$

$$t_p = 2(2.10)\sqrt{f_b/F_y} \qquad \text{(AISC p. 3-106)}$$
$$= 2(2.10)\left(\sqrt{1050/36{,}000}\right)$$
$$= 0.72''$$ USE 3/4" THICK PL

TENSION ON ANCHOR BOLTS $= \left(20{,}000\#\text{-IN}/6''\right)/2\text{ BOLTS} = 1{,}667\#$

FOR 3/4"ϕ HILTI DROP-IN ANCHORS $T = 4065 \times$ SPACING ADJ. FACTOR
$= 4065\,(0.5) = 2033\# > 1667\#$ ok

USE 3/4"ϕ DROP INS

FLOOR GRATING:

FOR WELDED STEEL GRATING:

LIVE LOAD = 100#/FT²

SPAN = 84/2 = 42"

SELECT 3/4" × 3/16" 19-W-4 GRATING

w_{ALLOW} = 174#/FT²

MAX. CONCENTRATED LOAD = 305#

BEAM 5

SPAN = 36" $w = (84/2\,(10.73))/2 = 15.3$ #/IN

$R_L = R_R = 36(15.3)/2 = 276$ #

$M = 15.3(36)^2/8 = 2479$ #-IN

TRY W4×13 $S_x = 5.46$ $A = 3.83$ $I_x = 11.3$

$76 b_f/\sqrt{F_y} = 76(4.06)/\sqrt{36} = 51.4$

$20{,}000/(d/A_f)F_y = 20{,}000/2.97(36) = 187$

36" < 51.4 IF BEAM IS COMPACT, $F_b = 0.66F_y$

$b/t = 4.06/0.345 = 11.8$

$65/\sqrt{F_y} = 10.83 < 11.8$ BEAM IS NOT COMPACT

$\therefore F_b = F_y\left[0.79 - 0.002\, b_f/2t_f \sqrt{F_y}\right]$

$= 36\left[0.79 - 0.002\left(4.06/2(0.345)\right)(6)\right]$

$= 25.9$ KSI

$f_b = 2479/5.46 = 454$ psi < 25,900 psi OK

$F_v = 14.4$ KSI

$f_v = 276/3.83 = 72.0$ psi < 14,400 PSI OK

USE W4×13

WALL CONNECTION FOR BEAM 4 (SIDE CHANNELS)

FIND MAXIMUM REACTION @ WALL:
A) FULL LIVE LOAD & DEAD LOAD ON PLATFORM

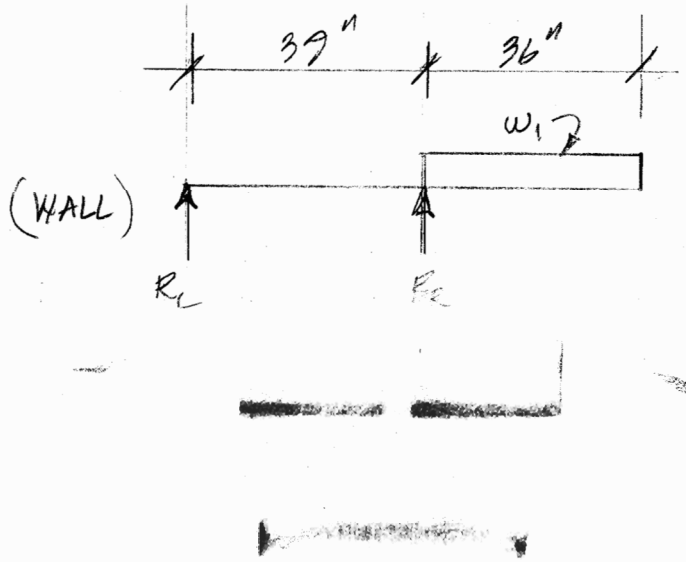

$w_1 = 0.73(84/2)$
$= 30.7\#/IN$

$R_R = \frac{57(30.7(36))}{39}$
$= 1{,}615\#$

$R_L = \frac{36(30.7)(\frac{36}{2})}{39}$
$= 510\#$

USING 4 "HILTI DROP-IN ANCHORS".
CONCRETE STRENGTH = 4000 PSI
FOR 3/4" ϕ BOLTS, ALLOWL. SHEAR = 5,000# EA.

MINIMUM SPACING = 7"
REDUCTION FACTOR FROM "HILTI" CAT. P 136 = 0.57
5000 (0.57) = 2850#

MINIMUM EDGE DISTANCE = 9.75"
REDUCTION FACTOR FROM "HILTI" CAT. P 136 = 0.83
2850 (0.83) = 2366# ← USE

SHEAR CAPACITY OF "HILTI DROP-INS"
= 2366 (4 BOLTS) = 9464# > 510# OK

USE 4 - 3/4" ϕ "HILTI" DROP-IN ANCHORS

CONNECTION OF ANGLE TO PLATE:
DEVELOP FULL STRENGTH OF "HILTI" ANCHORS = 9464#:
ANGLE THICKNESS = 3/8"
PLATE THICKNESS = 1/2"
MAX WELD SIZE = 3/8" - 1/16" = 5/16"
STRENGTH OF 1" LENGTH OF 5/16" WELD:
0.3 (.707)(5/16)(70) = 4.64 K/IN = 4640#/IN

STRENGTH OF 1" LENGTH OF 1/4" WELD:

$0.3(.707)(1/4)(70) = 3.71^K/IN = 3710^\#/IN$

USING 3" WELD EA. SIDE OF ANGLE:

$2(3")(3710) = 22,260^\# > 9464^\#$ OK

USE 3" OF 1/4" WELD EA. SIDE OF ANGLE

CHECK BOLTS BETWEEN CHANNEL AND ANGLE:

SHEAR CAPACITY OF 3/4"ϕ GR 5 BOLTS
IN SINGLE SHEAR: $7.51^K = 7510^\#$ EA.
FOR 2 BOLTS, ALLOW. LOAD $= 2(7510)$
$= 15020^\# > 510^\#$
OK

USE 2- 3/4"ϕ GR. 5 BOLTS

PLATFORM RAILING DESIGN

FROM OSHA CODE:
TOP SURFACE OF RAIL 42" ABOVE PLATFORM
HORIZONTAL LOAD OF 200#

LENGTH FROM TOP OF TOP RAIL TO TOP/SUPPORT
= 43"

$M = 200^{\#}(43) = 8600^{\#}\text{-in}$

STANDARD PIPE, 1½" NOMINAL, $S_x = 0.326 \text{ in}^3$

$f_b = 8600/0.326$
$= 26{,}380 \text{ psi}$

FOR ASTM A500 GRADE C $F_y = 46{,}000 \text{ psi}$

$F_b = 46{,}000(0.60)$
$= 27{,}600 \text{ psi} > 26{,}300 \text{ psi}$ ok

USE 1½" ø ASTM A500 GRADE C PIPE

BENDING ON CONNECTOR PLATE
TRY ½" PLATE 6" LONG

$S = 0.5(6)^2/6$
$= 3 \text{ in}^3$

$f_b = 8600/3$
$= 2867 \text{ psi}$

$F_b = 0.60(36)$
$= 21.6 \text{ ksi} = 21{,}600 \text{ psi} > 2867 \text{ psi}$ ok

WELDS:
$P = 8600/6"$
$= 1433^{\#}$ TOP & BOTTOM
1" OF ¼" WELD $= 0.3(.707)(70)(1/4)$
$= 3.7^{k} = 3700^{\#}$

ACTUAL LOAD $= 1433/2$ (WELD EA. SIDE OF ⊥)
$= 717^{\#} < 3700^{\#}$ ok

USE ¼" WELD EA. SIDE
OF ½" × 6" PLATE

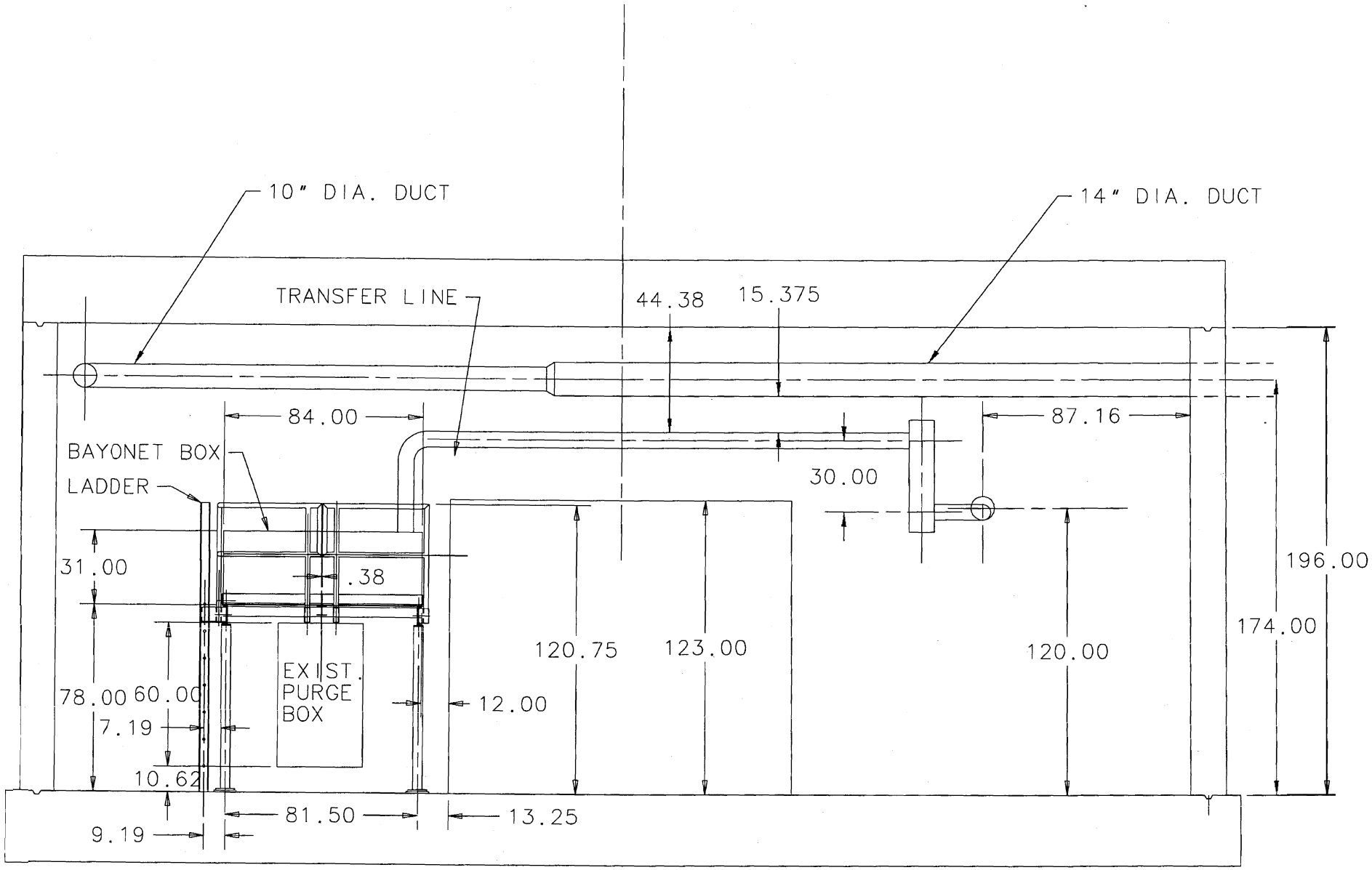
10" DIA. DUCT
14" DIA. DUCT
TRANSFER LINE
44.38
15.375
84.00
87.16
BAYONET BOX
LADDER
30.00
31.00
.38
196.00
174.00
120.75
123.00
120.00
EXIST. PURGE BOX
78.00
60.00
12.00
7.19
10.62
81.50
13.25
9.19

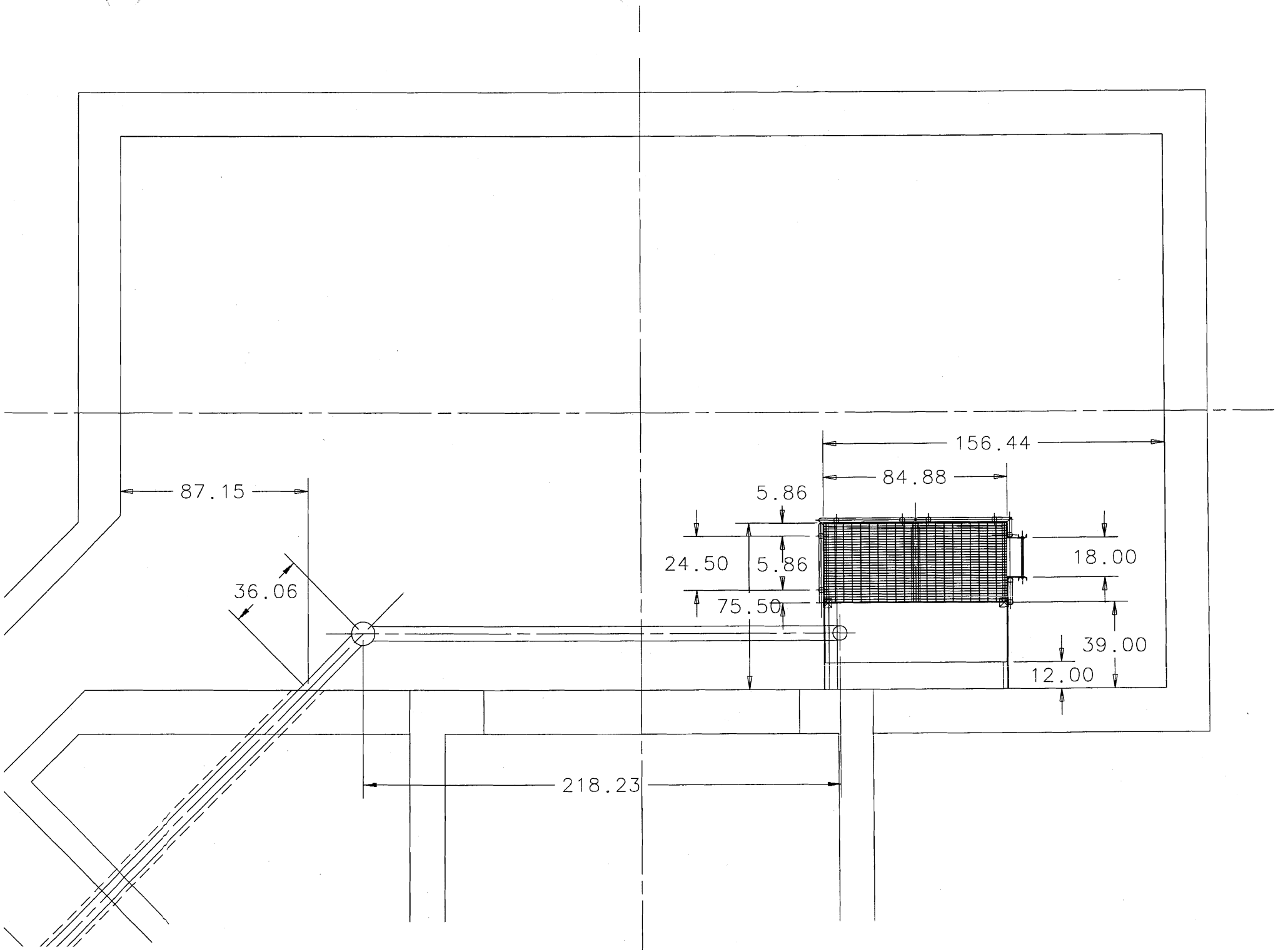
156.44
84.88
87.15
5.86
24.50
5.86
18.00
36.06
75.50
39.00
12.00
218.23

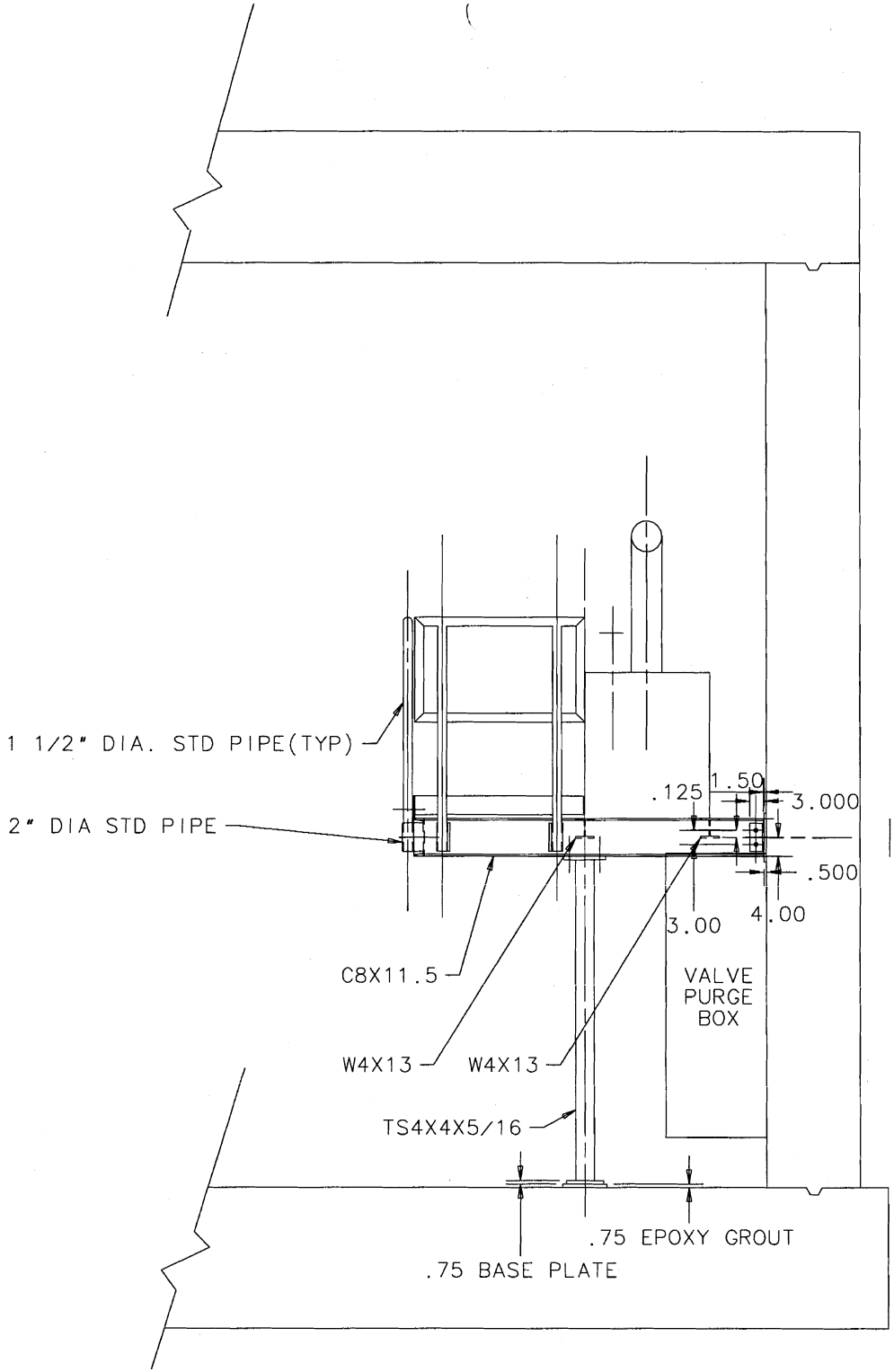
1 1/2" DIA. STD PIPE(TYP)
2" DIA STD PIPE
.125
1.50
3.000
.500
3.00
4.00
C8X11.5
VALVE
PURGE
BOX
W4X13
W4X13
TS4X4X5/16
.75 EPOXY GROUT
.75 BASE PLATE

PART 9
MAGNET SUPPORT

NEW MAGNET SUPPORT ± 36" HIGHER THAN EXISTING:

EXISTING HEIGHT FROM ℄ MAGNET TO FLOOR = 32.88 + 20.906
= 53.786"

NEW HEIGHT = 53.786 + 36.0 = 89.786"

FROM ENGINEERING NOTE 078: HORIZ LOAD = 6000# (P. 3)

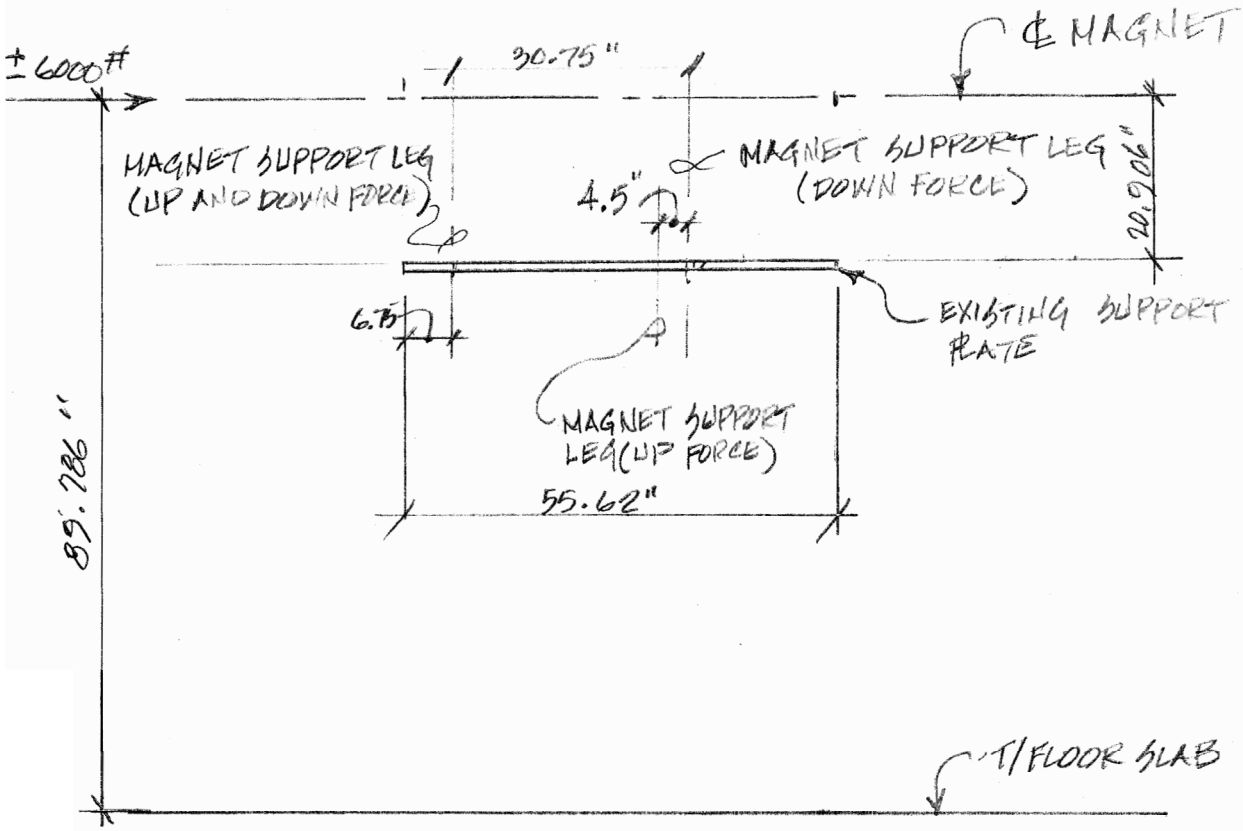

A) FOR HORIZONTAL FORCE FROM UPSTREAM TO DOWNSTREAM:
EXISTING SUPPORT PLATE:
M. = 6,000 × 20.906
= 125,436 #-IN

DISTANCE BETWEEN MAGNET SUPPORT LEGS = 30.75"

VERTICAL FORCE = ± 125436 / 30.75
= 4080#

OR 4080 / 2 = 2040 # PER LEG

DEAD WEIGHT OF CRYOSTAT W/ 150 LITERS OF LIQUID HELIUM = 2600#

2600 / 2 = 1300# PER SIDE
1300 / 2 = 650# PER LEG FOR 2 SUPPORTS
1300 / 3 = 433# PER LEG FOR 3 SUPPORTS

MAXIMUM DOWN FORCE = 2040 + 650
= 2690#

FROM REID CATALOG, ALLOWABLE LOAD ON LEVELING PAD = 5000# > 2690# OK

4 - 1/2" ϕ BOLTS, 2 PER SIDE, TO TAKE SHEAR & TENSION

VERT. TENSION LOAD = 2040# - 433#
= 1670# PER SIDE

1670#/2 = 803.5# BOLT

SHEAR LOAD = (6000/2)/2 BOLTS
= 1500#/BOLT

ASSUME GRADE 18-8 SS BOLTS 1/2" ϕ:
YIELD = 80,000 PSI TENSILE = 100,000 PSI

$F_t = 0.33 F_U$
= 0.33(100,000)
= 33,000 PSI

$F_V = 0.17 F_U$
= 0.17(100,000)
= 17,000 PSI

AREA OF 1/2" ϕ BOLT = $\pi(1/2)^2/4$
= 0.1964 IN²

TENSION/BOLT = 0.1964(33,000)
= 6480#

SHEAR/BOLT = 0.1964(17,000)
= 3339#

f_t = 1670/0.1964 = 8503 PSI
f_V = 1500/0.1964 = 7638 PSI

8503/33,000 + 7638/17,000 = 0.707 < 1.0 OK

B) FOR HORIZONTAL FORCE FROM DOWNSTREAM TO UPSTREAM:

DISTANCE BETWEEN MAGNET SUPPORT LEGS AND VERTICAL BRACING CHANNEL = 30.75 - 4.5
= 26.25"

VERTICAL FORCE = 125436/26.25
= 4779#

MAX DOWN FORCE = 4779 + 650
= 5429.0#/LEG

HAGNET SUPPORT

R. [illegible]
OCT. 4, 2006

DOWARD LOAD CARRIED ON UPSTREAM LEG W/ 4" x 6" PLATE:

5429/(4 x 6) = 226 PSI OK

UPWARD LOAD CARRIED BY 5, ½" Ø 33 THREADED RODS.

MAX. UP FORCE = 4779#
CHANNEL PICKS UP FORCE IN 2 PLACES
= 4779/2 = 2389.5# EA.

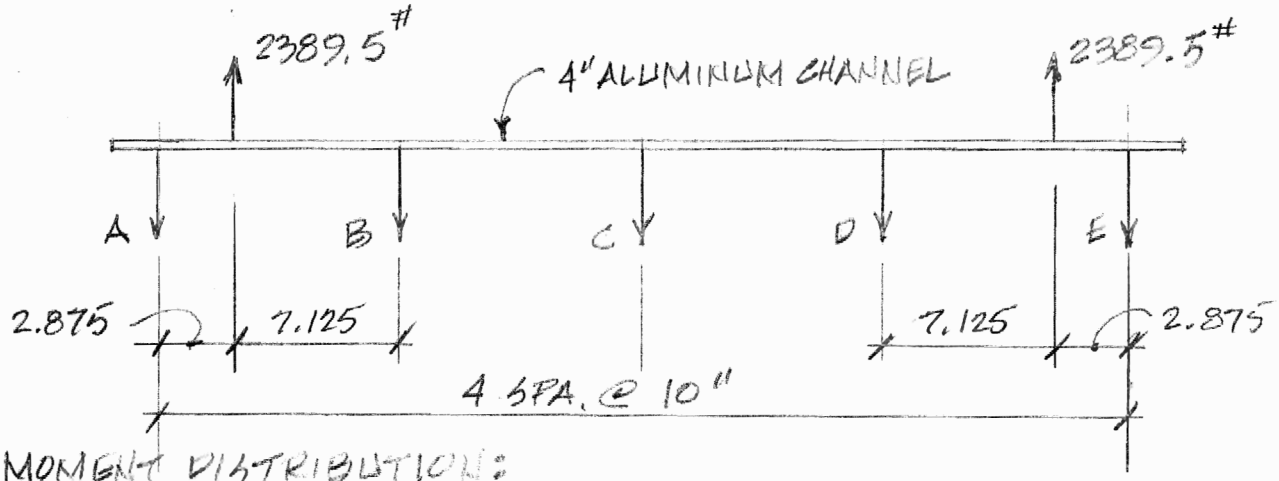

MOMENT DISTRIBUTION:

FEM A→B & E→D $= \frac{Pab^2}{\ell^2} = \frac{2389.5(2.875)(7.125)^2}{10^2} = 3487.5$ #-IN

FEM B→A & D→E $= \frac{Pa^2b}{\ell^2} = \frac{2389.5(2.875)^2(7.125)}{10^2} = 1407.2$ #-IN

DF	1.0	0.5	0.5	0.5	0.5	0.5	0.5	1.0
FEM	-3487.5	+1407.2	0.0	0.0	0.0	0.0	-1407.2	+3487.5
DIST	+3487.5	-703.6	-703.6	0.0	0.0	+703.6	+703.6	-3487.5
CO	-351.8	+1743.8	0.0	-351.8	+351.8	0.0	-1743.8	+351.8
DIST	+351.8	-871.9	-871.9	0.0	0.0	+871.9	+871.9	-351.8
CO	-436.0	+175.9	0.0	-175.9	+175.9	0.0	-175.9	+436.0
DIST	+436.0	-88.0	-88.0	0.0	0.0	+88.0	+88.0	-436.0
CO	-44.0	+218.0	0.0	-44	+44.0	0.0	-218.0	+44.0
DIST	+44.0	-109.0	-109.0	0.0	0.0	+109.0	+109.0	-44.0
H	0.0	+1772.4	-1772.5	-571.7	+571.8	+1772.5	-1772.4	0.0

MAGNET SUPPORT | R. J. Hoff
OCT. 4, 2006

REACTION @ A & E $= \frac{Pb^2}{\ell^3}(3a+b) = \frac{2389.5(7.125)^2}{10^3}(3(2.875)+7.125)$

$= 1910.5^{\#}$

REACTION @ B & D $= \frac{Pa^2}{\ell^3}(3b+a) = \frac{2389.5(2.875)^2}{10^3}(3(7.125)+2.875)$

$= 479.0^{\#}$

R	1910.5	479.0	0.0	0.0	0.0	0.0	479.0	1910.5
R_H	177.2	177.2 + 120.1	−120.1	−120.1	+120.1	177.2	177.2
R_V	1733.3	656.2 + 120.1	−120.1	−120.1	+120.1	+656.2	1733.3
TOTAL R	1733.3#	776.3#	−240.2#			776.3#	1733.3#

THREADED ROD = 1/2" ϕ 316 STAINLESS

$F_y = 35$ KSI $F_u = 85$ KSI

$F_t = 0.33 F_u$
$= 0.33(85)$
$= 28.05$ KSI

$A = \frac{\pi d^2}{4}$
$= 3.14159(0.5)^2/4$
$= 0.1963 \text{ IN}^2$

ALLOWABLE TENSION $= 0.1963(28.05)$
$= 5.5^K$
$= 5500^{\#} > 1733.3^{\#}$ ok

SHEAR CARRIED BY 4 BOLTS ON UPSTREAM LEGS.

MAGNET SUPPORT

OCT. 4, 2006

NEW MAGNET STAND:

PRELIMINARY HEIGHT OF MAGNET = 90" ABOVE FLOOR

OVER-TURNING MOMENT = 90"(6000)#
= 540,000 "-#

IF LEGS ARE 44.375" APART, VERTICAL REACTION =

540,000/44.375 = 12,169 # TENSION OR COMPRESSION

12,169/2 = 6085 #/LEG T OR C

STAND LEGS:

VERTICAL HEIGHT OF LEG = 90" - (20.906 + 0.625)
= 68.469"

SAY ℓ = 68.5"

TRY 4 x 4 x 1/4" TUBE
6063-T5

$A = d_1^2 - d_2^2 = 4.0^2 - 3.5^2$
$= 3.75 \text{ IN}^2$

$r = \sqrt{\frac{d_1^2 + d_2^2}{12}}$
$= \sqrt{\frac{4.0^2 + 3.5^2}{12}}$
$= 1.53$

$I = \frac{d_1^4 - d_2^4}{12} = \frac{4.0^4 - 3.5^4}{12}$
$= 8.83 \text{ IN}^4$

$S = \frac{d_1^4 - d_2^4}{6 d_1} = \frac{4.0^4 - 3.5^4}{6(4.0)}$
$= 4.41 \text{ IN}^3$

$\ell/r = 68.5/1.53$
$= 45$

SLENDERNESS LIMITS FROM ALUMINUM ASSOC "SPECIFICATIONS FOR ALUMINUM STRUCTURES" P. 41 FOR 6063-T5

$S_1 = 11$ $S_2 = 99$ OR $S_1 = 65$ < 1" FROM WELD

$S_1 < \ell/r < S_2$ ∴ $F_c = 8.9 - 0.037\,\ell/r$ OR 6.5 KSI 1" FROM WELD
$= 8.9 - 0.037(45)$
$= 7.235$ KSI

COMPRESSION:
ALLOWABLE LOAD = 7.235 (3.75)
= 27.13 K = 27,130# > 6085# ok

TENSION:
FOR SECTION WITHIN 1" OF WELD F_t = 6.5 KSI

ALLOWABLE LOAD = 6.5 (3.75)
= 24.4 K = 24,400# > 6085# ok

DIAGONAL BRACE:

$$\text{LENGTH} = \sqrt{44.375^2 + 68.5^2}$$
$$= 81.6''$$

$$l/r = 81.6/1.53$$
$$= 53$$

$$S_1 < l/r < S_2 \therefore F_c = 20.2 - 0.126\, l/r$$
$$= 20.2 - 0.126(55)$$
$$= 13.27 \text{ KSI}$$

COMPRESSION:

ALLOWABLE LOAD $= 13.27(3.75)$
$= 49.8^K = 49{,}800^\#$

TENSION:

FOR SECTION WITHIN 1" OF WELD $F_t = 11.0$ KSI

ALLOWABLE LOAD $= 11.0(3.75)$
$= 41.25 = 41{,}250^\#$

ONE SIDE FRAME:

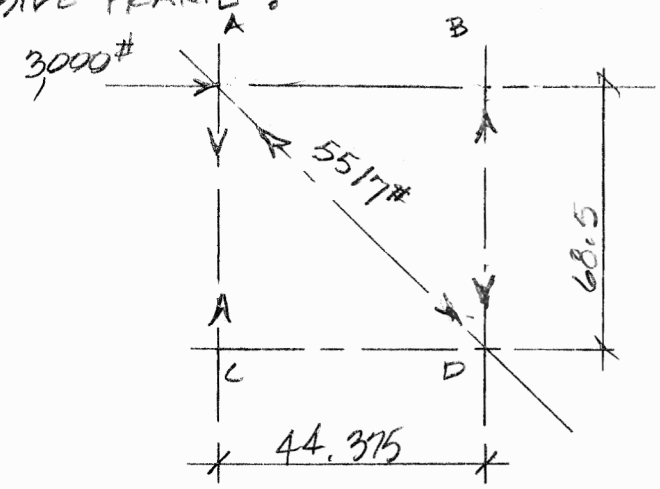

$$\text{TAN } LADC = 44.375/68.5$$
$$LADC = 32.94^\circ$$

MEMBER A-D $= 3000/\sin 32.94$
$= 5517^\#$ (DIAGONAL BRACE)

MEMBER B-D $= 5517(\cos 32.94)$
$= 4630^\#$ (VERT. COMP)

MEMBER A-C $= 3000/\tan 32.94$
$= 4630^\#$ (VERT. TENSION)

ALL

MAXIMUM DOWNFORCE ON MAGNET DOWNSTREAM SUPPORT LEGS = 2040 # + 650# MAGNET DEAD LOAD
= 2690 #

BEAM UNDER REAR MAGNET SUPPORTS:
SPAN = 36"

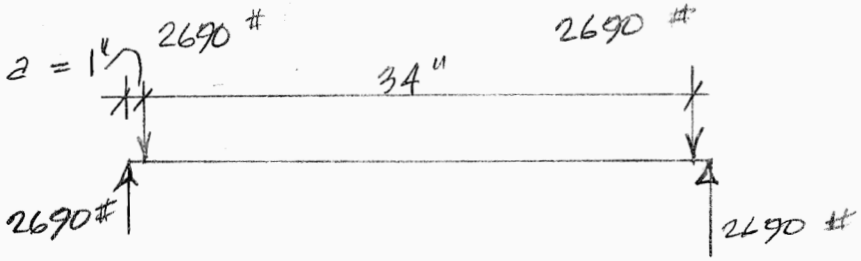

$M = Pa = 2690\,(1.0)$
$= 2690$ #-IN

FOR 4×4×1/4 SQUARE TUBE:

$L_b = 36"$

$S_c = bd^3 - b_1d_1^3 / 6d = 4(4)^3 - 3.5(3.5)^3 / 6(4)$
$= 4.41\ IN^3$

$I_y = bd^3 - b_1d_1^3 / 12 = 4(4)^3 - 3.5(3.5)^3 / 12$
$= 8.83\ IN^4$

SLENDERNESS (P. 40) FOR 6061-T6:

$S_1 = \frac{L_b S_c}{I_y} = = 36(4.41)/8.83 = 18.0 < 146$

$\therefore F_b = 21.0$ KSI

S_x REQ'D $= 2690/21{,}000$
$= 0.13\ IN^3 < 4.41$ ok

USE 4×4×1/4 TUBE

FOR CONNECTION TO SIDE SUPPORT BEAM;
FROM P56 TABLE 7.1.3.1
USE 4043 ELECTRODE

FROM P. 56 TABLE 7.1.3.2
ALLOWABLE SHEAR STRESS = 5.0 KSI

FOR 3/16" WELD, ALLOW. LOAD = 3/16(5.0)(.707)
= 663 #/IN

LENGTH OF WELD REQ'D = 2690/663
= 4.1"

USE 3/16" FILLET EA. SIDE OF TUBE = 8" > 4.1" ok

LONG SIDE TOP BEAM:
SPAN = 44.375"

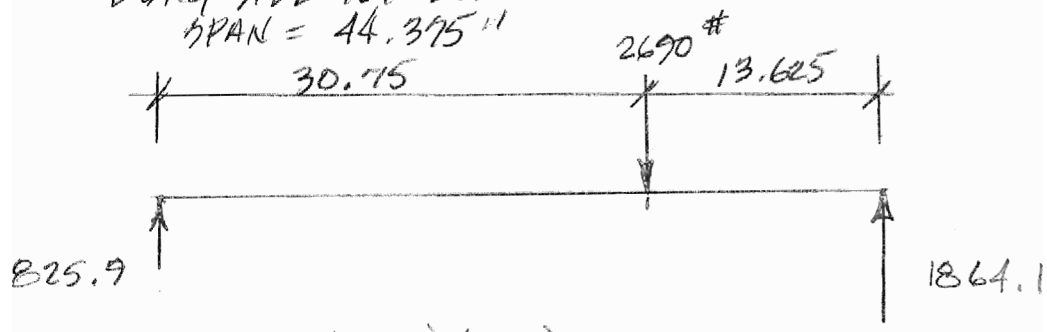

$M = 30.75(13.625)(2690)/44.375$
$= 25,398$ #-IN

SLENDERNESS:
$S = L_b S_c / I_y = \frac{44.375(4.41)}{8.83} = 22 < 146$
$\therefore F_b = 21.0$ KSI

$S_{x\,REQ'D} = 25398/21000$
$= 1.21\,IN^3 < 4.41\,IN^3$ ok

CHECK COMBINED LOADING:

BENDING $f_b = 25398/4.41$
$= 5759$ psi

COMPRESSION $= 3000/((4)(4) - 3.5(3.5))$
$= 800$ psi

$r = \sqrt{I/A} = \sqrt{8.83/3.75} = 1.53$

$L/r = 44.375/1.53 = 28.9$

$9.5 < L/r < 66$

$\therefore F_a = 20.2 - 0.126\,L/r$
$= 20.2 - 0.126(28.9)$
$= 16.6$ KSI

$f_a/F_a + f_b/F_b = 800/16{,}600 + 5759/21{,}000$
$= 0.322 < 1.0$ ok

USE TUBE 4 x 4 x 1/4

WELD REQ'D:
FOR 3/16" FILLET: $3/16(5)(.707) = 663$ #/IN
$1864/663 = 2.8$" WELD BOTH SIDES $= 8$" ok

MAGNET SUPPORT | R. J. NOONEY
OCT. 6, 2006

STAND LEGS:

REAR (DOWNSTREAM) LEGS:

VERTICAL LOAD FROM MAGNET = 1864.1#
VERTICAL LOAD DUE TO 6000# HORIZONTAL LOAD = 4630.0#
6494.1#

DESIGN FOR 6500# VERT + 3000# HORIZ. LOAD

LEG LENGTH = 89.786" − 20.926"
= 68.88"

TRY 4×4×¼ TUBE

$A = 4(4) - 3.5(3.5) = 3.75 \text{ IN}^2$

$S = 4(4)^3 - 3.5(3.5)^3/6(4) = 4.41 \text{ IN}^3$

$I = 4(4)^3 - 3.5(3.5)^3/12 = 8.83 \text{ IN}^3$

$r = \sqrt{I/A} = \sqrt{8.83/3.75} = 1.53$

$L/r = 68.88/1.53 = 45$

$S_1 < L/r < S_2$

$\therefore F_a = 20.2 - 0.126\, L/r$ p.40 TAB 3.3.27
$= 14.53$ KSI

$f_v = 6500/3.75 = 1734$ psi

SHEAR:
$h/t = 4/0.25 = 16$

$h/t < S_1$
$\therefore F_v = 7.5$ KSI p.40 TAB 3.3.27

$f_v = 3000/3.75 = 800$ PSI

COMBINED LOADING:
$f_a/F_a + f_v/F_v = 1734/14530 + 800/7500$
$= 0.226 < 1.0$ ok

USE TUBE 4×4×¼

LEG BASE PLATE:

LOADS: 6500 COMPRESSION
6085 TENSION

TRY 8X8 PLATE:

CONCRETE STRENGTH = $f'c$ = 4000 PSI

FROM AISC P 3-107

$A_{PL} = P/0.7f'_c$

$= 6500/0.7(4000)$

$= 2.32 IN^2 < (8)^2 = 64 IN^2$ OK

$f_p = 6500/64 = 101.6$ PSI

$0.95d = 0.95(4)$
$= 3.8$

$m = (8 - 3.8)/2$
$= 2.1''$

$F_b = 16$ KSI WEAK AXIS WITHIN 1" WELD
P40 TAB 3.3.27

$t_{PL} = 2m\sqrt{f_p/F_y}$

$= 2(2.1)\sqrt{102/16000} =$

$= \underline{0.33''}$

FOR UPLIFT:

$6085/4 = 1521^{\#}$/BOLT

FOR 1/2" ϕ HILTI DROP-IN ANCHORS:

ALLOW. TENSION = 1840#
BOLT SPACING = 6", USE LOAD ADJUSTMENT FACTOR OF 0.85
$1840(0.85) = 1564^{\#}$/BOLT

SHEAR = $3000/4 = 750^{\#}$/BOLT

ALLOW. SHEAR = 2760×0.85
$= 2346^{\#}$/BOLT

FOR COMBINED LOAD:

$1521/1564 + 750/2346 = 1.29 > 1.0$ NG.

TRY 5/8" ϕ DROP-IN ANCHORS:

ALLOW. TENSION = $2630^{\#}$/BOLT
ALLOW SHEAR = $4510^{\#}$

LOAD ADJUSTMENT FACTOR FOR 6" SPACING
= 0.61

ALLOW. TENSION = 0.61(2630) = 1578#
ALLOW. SHEAR = 0.6(4510) = 2751#

1521/1578 + 750/2751 = 1.24 > 1.0 NG.

TRY 3/4" ϕ DROP-IN ANCHORS
ALLOW. TENSION = 3830#
ALLOW. SHEAR = 5580#

LOAD ADJUSTMENT FACTOR FOR 6" SPACING
= 0.50

ALLOW. TENSION = 3830(0.50) = 1915#
ALLOW. SHEAR = 5580(0.50) = 2790

1521/1915 + 750/2790 = 1.06 WITHIN 10%
OK

USE 3/4" ϕ STAINLESS HILTI DROP-IN ANCHORS

WELD BETWEEN LEG & BASE PL:
FROM P56, TABLE 7.1.3.2, ALLOW. SHEAR STRESS = 5.0 KSI

FOR 3/16" WELD, ALLOW LOAD = 3/16(5.0)(.707) = 663#/IN

MAX. ALLOW. LOAD PER SIDE OF TUBE = 4(663)
= 2652#

2652 x 2 SIDES = 5304" < 6085# - NG.

FOR 1/4" WELD, ALLOW LOAD = 1/4(5.0)(.707) = 0.884 K/IN
MAX. ALLOW LOAD PER SIDE OF TUBE = 4(0.884)(1000)
= 3535#

3535 x 2 SIDES = 7070# > 6085# OK

∴ 2 SIDES OF TUBE CARRY VERT. LOAD = 6085#
& 2 SIDES OF TUBE CARRY HORIZ. LOAD = 3000#

USE 1/4" FILLET ALL AROUND OK

BOLTS CONNECTING TOP PLATE TO FRAME

USE ASTM A193 GRADE B8 OR B8M
$F_y = 30,000$ PSI $F_T = 75,000$

BOLTS HOLDING UPSTREAM LEGS:

DESIGN LOADS:
TENSION = 6085/4 BOLTS = 1521#/BOLT
SHEAR = 3000/4 BOLTS = 750#/BOLT

FOR 18-8 OR 316 STAINLESS FASTENERS

TENSILE STRENGTH = 100 000 PSI
YIELD STRENGTH = 65000 PSI

A307 STEEL $F_T = 60,000$ PSI ∴ USE ALLOWABLES FOR A307 BOLTS

$F_T = 20$ KSI $F_S = 10.0$ KSI

FOR 3/4"ϕ BOLTS

$\pi(0.75)^2/4 = 0.4418$

$F_T = 20,000(0.4418) = 8836$#
$F_S = 10,000(0.4418) = 4418$#

$f_t = 1521/0.4418 = 3443$ PSI
$f_s = 750/0.4418 = 1698$ PSI

$3443/20,000 + 1698/10,000 = 0.342 < 1.0$ OK

USE 3/4"ϕ BOLTS

℄ MAGNET RAISED TO 78" ABOVE EXIST. FLOOR
NEW HORIZONTAL LOAD = 256# (FROM Z. TANG ANALYSIS)
USE 300#

REMOVE EXIST. MAGNET LEVELER AND USE 2 NEW REAR SUPPORTS, SIMILAR TO FRONT SUPPORTS.

CHECK NEW REAR SUPPORTS:

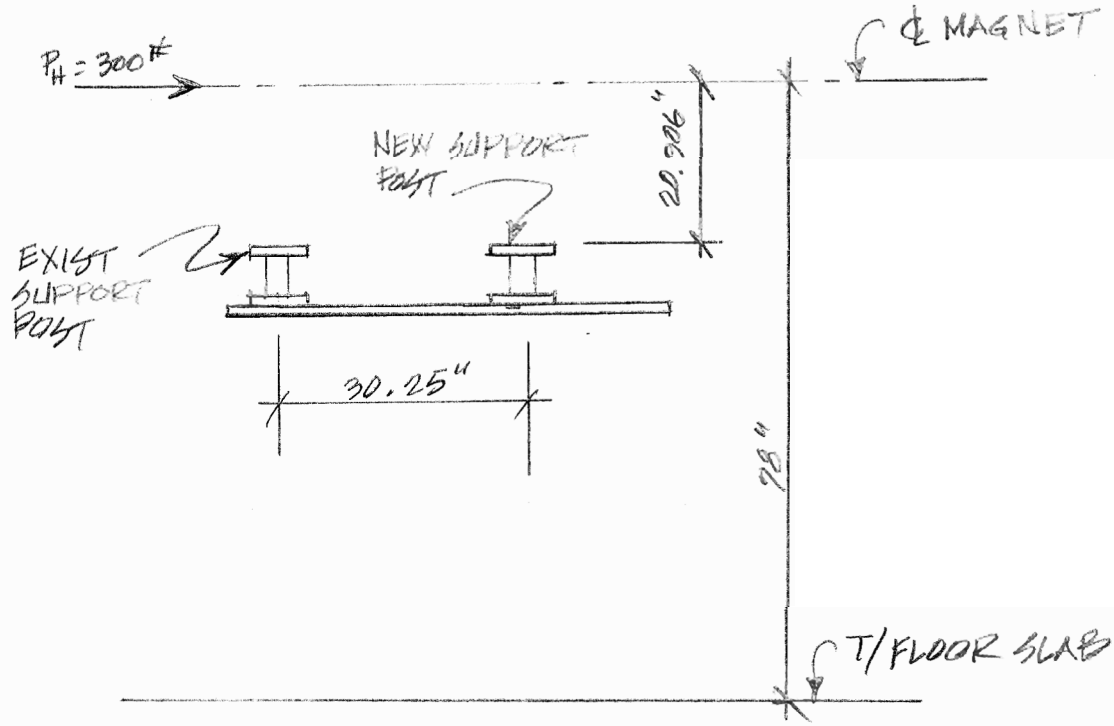

NEW SUPPORT POST:

COMPARE STAINLESS STEEL TO ALUMINUM

STAINLESS

3" SCH 40 SS
OD = 3.5
ID = 3.068

$$A = \frac{\pi(3.5^2 - 3.068^2)}{4}$$
$$= 2.231 IN^2$$

L = 5.75"
E = 29,000,000 PSI

$$r = \frac{\sqrt{d_1^2 + d_2^2}}{4}$$
$$= \frac{\sqrt{3.5^2 + 3.068^2}}{4}$$
$$= 1.16$$

ALUMINUM

3" SCH 40 AL
OD = 3.5
ID = 3.068

$$A = \frac{\pi(3.5^2 - 3.068^2)}{4}$$
$$= 2.231 IN^2$$

L = 5.75"
E 10,000,000 PSI

$$r = \frac{\sqrt{d_1^2 + d_2^2}}{4}$$
$$= \frac{\sqrt{3.5^2 + 3.068^2}}{4}$$
$$= 1.16$$

DEAD WEIGHT OF CRYOSTAT W/150 LITERS OF LIQUID HELIUM
= 2600#

IF 3 OF 4 SUPPORTS TAKE LOAD:
2600#/3 = 867#

HORIZONTAL LOAD = 300#
MOMENT ARM = 20.906"
M = 300(20.906)
= 6272#-IN

VERTICAL LOAD FROM HORIZ. LOAD:
= 6272/30.25
= 207#

TOTAL VERT. LOAD = 867 + 207
= 1074# USE 1075#

3" SCH 40 SS

$\Delta = PL/AE$

$= \frac{1075(5.75)}{2.23(29{,}000{,}000)}$

$= 0.0001''$

3" SCH 40 AL

$\Delta = PL/AE$

$= \frac{1075(5.75)}{2.23(10{,}000{,}000)}$

$= 0.0003''$

AXIAL LOAD = 1075#

$Kl/r = \frac{2.0(5.75)}{1.16}$

$= 9.91 < 200$ ok

$L/r = 5.75/1.16$
$= 4.96 < 9.5$

$\therefore F_c = 12.0$ KSI TAB. 3.3.27 P. 40 ALUMINUM SPECF.

$C_c = \sqrt{\frac{2\pi^2 E}{F_y}} = \sqrt{\frac{2\pi^2(29{,}000{,}000)}{35{,}000}}$

$= 128$

$f_c = P/A = 1075/2.23$
$= 482$ psi $< 12{,}000$ psi
ok

$$F_a = \frac{\left[1 - \frac{(Kl/r)^2}{2C_c^2}\right]F_y}{5/3 + \frac{3(Kl/r)}{8C_c} - \frac{(Kl/r)^3}{8C_c^3}}$$

$$= \frac{\left[1 - \frac{(1.16)^2}{2(128)^2}\right]35}{5/3 + \frac{3(1.16)}{8(128)} - \frac{(1.16)^3}{8(128)^3}}$$

$= 21.0$ KSI > 482 psi ok

HORIZ. LOAD = 300#
USE 3 LEGS
P_H / SUPPORT = 300/3
= 100#

$$S = \frac{\pi(d_1^4 - d_2^4)}{32 d_1}$$

$$= \frac{\pi(3.5^4 - 3.068^4)}{32(3.5)}$$

$= 1.72 \text{ IN}^3$

M = 100 (5.75)
= 575 #-IN

$f_b = M/S = 575/1.72$
= 334 PSI

D/t = 3.5/.216
= 16.2

FROM TAB. B5.1 p 5-36 AISC:
3300/36 = 91.7 > 16.2

∴ PIPE IS COMPACT

$F_b = 0.66 F_y$ F3.1 P. 5-48
= 0.66(35)
= 23.1 KSI > 334 psi ok

$R = \frac{3.5}{2} - \frac{.216}{2}$
= 1.64

R/t = 1.64/0.216
= 7.59 < 9.0

∴ F_b = 12.0 KSI
TAB. 3.3.27 p40
ALUM. SPEC.

$f_b < F_b$
334 < 12,000 ok

USE 3" ϕ SCHED 40 PIPE, EITHER STAINLESS STEEL OR ALUMINUM.

CHECK POST MOUNTING PLATES:

LENGTH FROM TOP OF TOP PLATE TO BOTTOM OF BOTTOM PLATE:
= 0.75 + 5.75 + 0.75
= 7.25"

M = 7.25 (300)
= 2175 #-IN

SPACING OF BOLT HOLES = 5"

VERTICAL LOAD = 2175/5
= 435#

MOMENT ON PLATE = 435 (2.5")
= 1088 #-IN

$S_y = 5(0.75)^2/6$
= 0.469 IN³

MOMENT ON PLATE DUE TO VERT. LOAD:

$P = 867^{\#}$

PLATE SIZE $= 7'' \times 5''$

$w = 867/7 \times 5$

$= 25\ \#/IN^2$

$P = 25(3.5 \times 5)$ (FOR 1 SIDE OF PLATE)

$= 438^{\#}$

MOMENT ARM $= 3.5/2$

$= 1.75''$

$M = 438(1.75)$

$= 767\ \#\text{-}IN$

COMBINED MOMENT $= 1088 + 767$

$= 1855\ \#\text{-}IN$

$f_b = 1855/0.469$

$= 3955\ psi$

FIND ALLOWABLE LOAD FOR 6061-T6 ALUMINUM

USE "SPECIFICATIONS FOR ALUMINUM STRUCTURES," p 40

$t = 5''$ $d = 0.75''$ $L_b = 7.0/2$

$= 3.5''$

$d/t = 0.75/5$

$= 0.15$

$\sqrt{L_b/d} = \sqrt{3.5/0.75}$

$= 2.16$

$d/t\sqrt{L_b/d} = 0.15(2.16)$

$= 0.32 < 26 \therefore F_b = 16^{KSI}$ (FOR 1" FROM WELD)

SINCE $f_b = 3955$ WHICH IS $< 16{,}000$

PLATE IS OK FOR BENDING → USE 3/4" THICK PLATE

STAND REDESIGN

TOP HORIZONTAL TUBING - LONG SIDE
SPAN = 44" TRY T/4 x 4 x 1/4 6061-T6 ALUMINUM

LOADS:
VERT. = 867#
VERT. LOAD DUE TO MAGNET QUENCH = (300# x 78"/30.25")/2
= 387#

P = 867 + 387 = 1254#

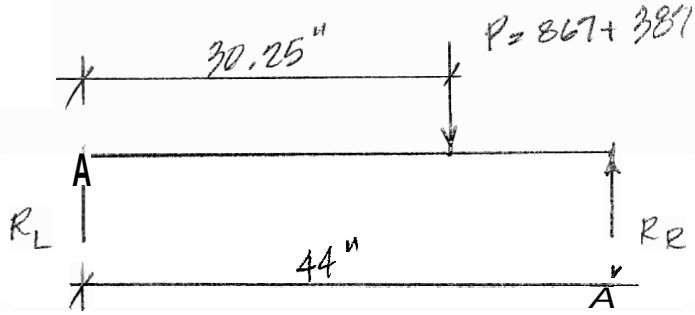

R_L = 1254(44 - 30.25)/44
= 392#

R_R = 1254(30.25)/44
= 862#

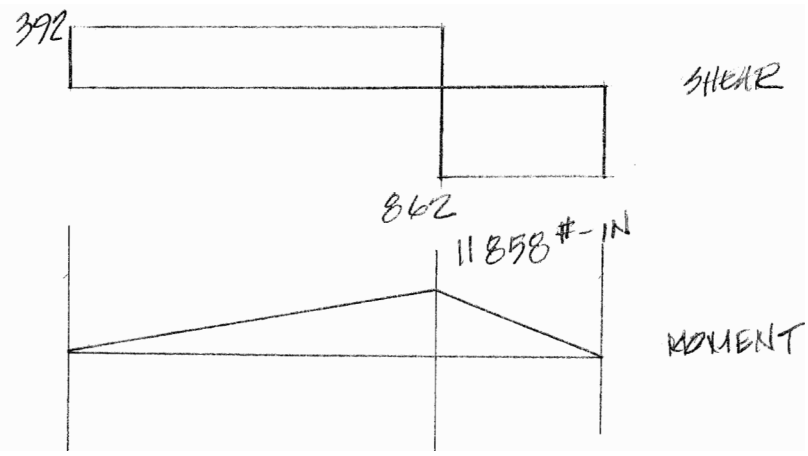

S = 4.41 IN³ (P. VI-36 ALUM. MANUAL)

f_b = 11858/4.41
= 2689 psi

SLENDERNESS:
L_b = 44 S_c = 4.41 I_y = 8.83

$L_b\, S_c / I_y = 44(4.41)/8.83$

$= 22 < 142 \therefore F_b = 12^{KSI}$ (p. 40) (WITHIN 1" OF YIELD)

$f_b < F_b$

$2689 < 16{,}000$ ok

SHEAR AREA $\doteq 2(0.25 \times 4.0)$
$= 2.0\ IN^2$

SHEAR STRESS $= 1254/2.0$
$= 627$ PSI

$h = 4 \quad t = 0.25 \quad h/t = 4/0.25$
$= 16 < 32 \therefore F_v = 7.5^{KSI}$

$627 < 7{,}500$ ok USE TS 4x4x0.25

DIAGONAL BRACE – LONG

LENGTH = 57" ANGLE = 45.2°

$r = 1.53$

$L/r = 57/1.53$
$= 37$

ALLOW. STRESS
TENSION = 11.0 KSI
COMPRESSION = 12.0 KSI

ALUM. MANUAL SPEC. NO.
1
7

SINCE BRACE CAN BE IN TENSION OR COMPRESSION, USE SMALLER TENSION VALUE OF 11.0 KSI

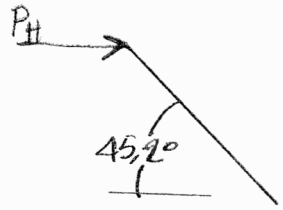

HORIZ LOAD = 300#

$P_H = 300/2$ (1/2 EA. SIDE)
$= 150$#

AXIAL LOAD:

$P_A = 150/\cos 45.2°$
$= 213$#

$f_A = 213/3.75$
$= 56.8$ PSI $< 11{,}000$ PSI
ok

USE TS 4x4x0.25

LOAD ON SHORT BRACE = 10% VERT. LOAD
= 10% 2600 #
= 260#

SINCE BRACE IS SHORTER AND LOAD IS SMALLER, USE SAME SIZE TUBE FOR SHORT BRACE.

STAND LEGS:

MAXIMUM LEG LOAD = 867# + 387#
= 1254#

$f_A = P/A$
= 1254/3.75
= 334 psi

LEG LENGTH = 42"
L/r = 42/1.53
= 28

FROM ALUMINUM MANUAL P. 40 SPEC. NO 7
WITHIN 1" WELD F_A = 12 KSI

334 < 12,000 PSI ok

USE TS 4X4X0.25

ANCHOR BOLTS:

HORIZONTAL LOADS:

IN LONG DIRECTION 300#
IN SHORT DIRECTION 10% 2600# = 260#
RESULTANT LOAD:
$\sqrt{300^2 + 260^2}$ = 397#

VERTICAL LOAD

MAXIMUM UPLIFT LOAD:
300 (78)/44 = 532#
FOR EA. FRONT LEG, LOAD = 532/2
= 266#

WT. OF MAGNET PER LEG = 2600/4
= 650#

650 - 266 = 384# DOWN FORCE
∴ NO UPLIFT & NO TENSION IN ANCHOR BOLTS

IF TOTAL HORIZONTAL LOAD IS CARRIED BY ONE LEG, LOAD PER BOLT = 397/4
= 99# /BOLT

FOR 3/4" ø HILTI DROP-IN:
ANCHOR SPACING = 7 3/4" c TOC

FROM HILTI TECH GUIDE P. 136

$f_A = 0.33 \frac{s}{h_{nom}} - 0.17$
= 0.33((7.75)/3.1875) - 0.17
= 0.63

ALLOWABLE SHEAR = 5000(0.63)
= 3162# > 99# OK USE 3/4" ø HILTI

CONNECTION BETWEEN MAGNET LEGS AND STAND PEDISTALS:

OF BOLTS @ EA. LEG = 2
BOLT SIZE = 1/2" ϕ

VERTICAL LOAD FROM PAGE 2, THIS CALCULATION = 207# TENSION

HORIZONTAL LOAD FROM PAGE 2, THIS CALCULATION = 300# TOTAL

CONSERVATIVELY USE LOAD APPLIED TO ONE LEG

f_t = 207/2 BOLTS × 0.1963 IN² = 527 PSI

F_T FOR GRADE 5 BOLTS = 26 − 1.8f_v ≤ 20 KSI (AISC P. 5-74 TAB. J3-3)

f_v = 300/2 BOLTS × 0.150 IN² = 300 PSI

F_T = 26 − 1.8(0.527) ≤ 20 = 25.1 → USE 20 KSI MAX

F_V = 10.0 KSI (AISC P. 5-73 TAB J3.2)

$f_v/F_V + f_t/F_T \leq 1.0$

300/10000 + 207/20,000 = 0.040 < 1.0 OK

USE 1/2" ϕ GRADE 5 BOLTS

CONNECTION BETWEEN MAGNET MOUNTING PLATE AND STAND:

OF BOLTS = 8 FRONT AN 2 REAR
BOLT SIZE = 3/4" ϕ

VERTICAL REACTION FROM QUENCH LOAD OF 300#:

M = 300 × (20.906 + 8.25) = 8747 #-IN

DISTANCE BETWEEN FRONT & REAR LEGS = 30.69"

P_V = 8747/30.69 = 285#

HORIZONTAL LOAD PER BOLT = 300/10
= 30#/BOLT

VERTICAL LOAD PER BOLT = 285/2X2 (REAR LEGS IN TENSION)
= 71.25#

f_v = 30/0.4418
= 68 psi

f_t = 71.25/0.4418
= 161 psi

F_T = 26 − 1.8(0.068)
= 25.9 KSI → USE MAX 20 KSI

F_V = 10 KSI (AISC P. 5-73 TAB. J3.2)

$.068/10 + .161/20 \overset{?}{\leq} 1$

= 0.015 < 1.0 ok USE 3/4"ϕ GRADE 5 BOLTS

LEG WELDS:
TOP MEMBERS
END WELD TO LEG
BUT WELD
THROAT AREA = S(L − 2s) s = TUBE THICKNESS
= 0.25(4 − 2(0.25)) L = LENGTH OF WELD
= 0.875 IN² EA. SIDE

MAX LOAD = 862#
f_v = 862/2(0.875)
= 493 psi
F_V = 7.0 KSI (TAB. 7.1.3.2 ALUM. MANUAL)
7,000 psi > 493 psi ok

DIAGONAL BRACE
END WELD TO LEG
BUTT WELD
LENGTH OF WELD
TOP HORIZONTAL = 3.26"
TOP VERTICAL = 2.39"
HORIZONTAL THROAT AREA = 0.25(3.26 − 2(0.25))
= 0.69 IN² EA. SIDE

HORIZ. LOAD = 300#
f_v = 300/2(0.69)
= 22 psi < 7000 psi ok

VERTICAL LEGS @ BASE
FILLET WELD ALL AROUND
MAX HORIZ. LOAD = 300#
MAX VERT. LOAD = 862# (UPLIFT)

$a_{WELD} = 0.707(3/16)$
$= 0.133 \text{ IN}^2/\text{IN}$

THROAT AREA $= a_{WELD}\, 2(H+B)$
$= 0.133 \times 2 \times (4+4)$
$= 2.13 \text{ IN}^2$

$f_H = 300/2.13$
$= 141 \text{ PSI}$

$f_T = 862/2.13$
$= 405 \text{ PSI}$

$f_H/F_H + f_T/F_T = 141/7000 + 405/7000$
$= 0.020 + 0.058$
$= 0.078 < 1.0$ OK

LINE

Dec 12, 2008

PART H
3HBILD BLOCK FLOOR

CHECK SHIELD BLOCK SUPPORT TUBE:

"A" BLOCK WT. = 1.5(3.0)(7.5)(150) = 5063 #
LIVE LOAD = 3.0(7.5)(100#/m²) = 2250 #
FOR HORIZONTAL LOAD = 10% VERT:

10%(5063 + 2250) = 731 # PER "A" BLOCK

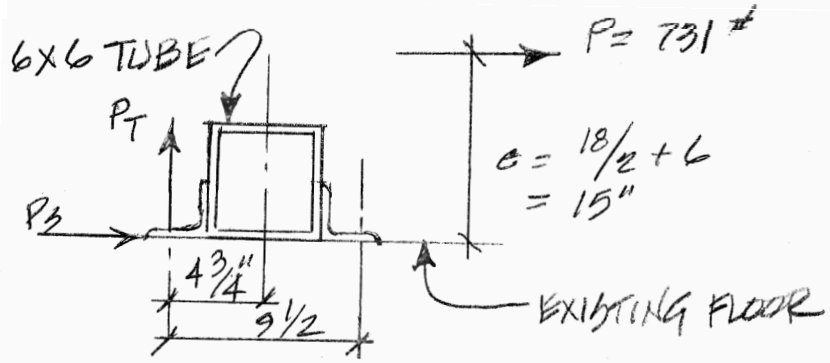

HORIZONTAL MOMENT = 731(15") = 10,965 #-IN

RESISTING ARM OF TUBE = 4 3/4"

P_T = 10965/4.75 = 2308 #

P_3 = 731/2 = 366 #

FROM "HILTI NORTH AMERICA PRODUCT TECHNICAL GUIDE."

RECOMMENDED WORKING LOAD: TENSION:

$N_{REC} = N_{ALL} \times f_A \times f_{RN}$

RECOMMENDED WORKING LOAD: SHEAR:

$V_{REC} = V_{ALL} \times f_A \times f_{RV}$

COMBINED LOADING:

$$\left(\frac{N_d}{N_{REC}}\right)^{5/3} + \left(\frac{V_d}{V_{REC}}\right)^{5/3} \leq 1.0$$

N_d = ACTUAL TENSION LOAD
V_d = ACTUAL SHEAR LOAD

FOR 5/8"ϕ STAINLESS DROP-IN ANCHORS:

$$f_A = 0.33\left(\frac{s}{h_{nom}}\right) - 0.17 = 0.33\left(\frac{9.5}{2.5625}\right) - 0.17$$
$$= 1.05 \rightarrow \text{USE } 1.0$$

FROM TABLE ON PAGE 135 N_{ALL} = 2630
V_{ALL} = 4510

SINCE ANCHORS INSTALLED IN FLOOR, f_{RN} & f_{RV} = 1.0

$N_{REC} = N_{ALL} \times f_A \times f_{RN} = 2630 \times 1.0 \times 1.0$
$= 2630\#$

$V_{REC} = V_{ALL} \times f_A \times f_{RV} = 4510 \times 1.0 \times 1.0$
$= 4510\#$

COMBINED LOADING:

$$\left(\frac{2308}{2630}\right)^{5/3} + \left(\frac{366}{4510}\right)^{5/3} \leq 1.0$$

$$(0.878)^{5/3} + (0.081)^{5/3} \leq 1.0$$

$$0.805 + 0.015 = 0.820 < 1.0 \quad \underline{ok}$$

SINCE THERE ARE 3 - 6X6 TUBE SUPPORTS AND ONE TUBE SUPPORT CAN CARRY THE HORIZONTAL FORCE, THERE IS A MINIMUM 3 TO 1 SAFETY FACTOR <u>ok</u>

NOT USED (2/9/07)

RAILING:
RAIL HT. = 42" TO TOP SURFACE

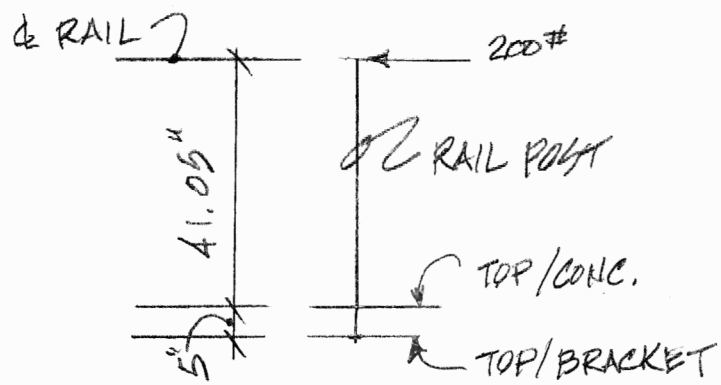

$M = (41.05 + 5)(200\#)$
$= 9210\#\text{-IN}$

FOR SCHEDULE 80 1½ ϕ ALUMINUM PIPE, $S_x = 0.412 \text{ IN}^3$
$I_x = 0.391 \text{ IN}^4$
$A = 1.068 \text{ IN}^2$

$f_b = 9210/0.412$
$= 22{,}354 \text{ PSI}$

FOR 6061-T6 ALUMINUM PIPE F_T ALLOW = 24,000 PSI > 22,354
<u>OK</u>

∴ USE 1½" ϕ SCHED 80 PIPE

NOT USED (12/9/07)

SUPPORT BRACKET:

LOAD ON BOLTS:

$28252/6'' = 4709^{\#}$ T OR C

FOR 2 BOLTS:
LOAD PER BOLT $= 4709/2$
$= 2355^{\#}$

FOR 5/8" ϕ SS DROP-IN ANCHORS:

$P_T = 2630^{\#}$
SPACING FACTOR FOR 6" = 0.61
EDGE DIST. FACTOR FOR 6" = 0.87

$P_{ALLOW} = 2630(0.61)(0.87)$
$= 1396^{\#}$/BOLT < 2355 N.G.

FOR 3/4" ϕ SS DROP-IN ANCHORS:
$P_T = 3830^{\#}$
SPACING FACTOR FOR 6" = 0.50

$P_{ALLOW} = 3830(0.50)$
$= 1915^{\#}$/BOLT < 2355 N.G.

TRY 8" SPACING:
SPACING FACTOR FOR 8" = 0.67
$P_{ALLOW} = 3830(0.67) = 2566^{\#} > 2355^{\#}$ OK

USE 3/4" ϕ SS DROP IN ANCHORS W/ 8" MIN. SPACING

DETERMINE PLATE THICKNESS:
$P = 4709^{\#}$, SPAN = 8" BETWEEN BOLTS

MAX. STRESS WILL OCCUR WITHIN 1" OF WELD
$\therefore f_b = 16$ KSI $= 16{,}000$ PSI

$M = Pl/4 = 4709(8)/4$
$= 9418$ #-IN

$S_{YREQ'D} = 9418/16{,}000$
$= 0.589\ IN^3$

$0.589 = 8(t)^2/6$
$0.665'' = t$

USE 3/4" THICK PLATE

NOT USED (2/19/07)

HORIZONTAL RAILS:

MAX SPAN FOR 1½" SCHED 40 ALUM. PIPE:

$F_b = 24$ KSI $= 24{,}000$ PSI (OVER 1" AWAY FROM WELD)

$b = 0.326$

$24{,}000 = M_{MAX}/0.326$

$7824 = M_{MAX}$

$Pl/4 = 200(l)/4 = 7824$

$l = 156'' \approx 13.0$ FEET

MAX. SPACING PER OSHA = 8'-0"

TRY 1/2" ϕ HILTI DROP-IN ANCHORS

ALLOWABLE WORKING LOADS (FROM CATALOG) = [illegible]

TENSION = 1840#

SHEAR = 2760#

$f_A = 0.33\,(9.5/2) - 0.17$

$= 1.40$ USE 1.0

EDGE DISTANCE ADJUSTMENT FACTOR = 1.0 SINCE ANCHOR IS IN FLOOR SLAB.

TENSION:

$N_{rec} = N_{all} \times f_A \times f_{rn}$

$= 1840 \times 1.0 \times 1.0$

$= 1840\#$

SHEAR:

$V_{rec} = V_{all} \times f_A \times f_{rv}$

$= 2760 \times 1.0 \times 1.0$

$= 2760\#$

FOR 3 ROWS OF TUBE SUPPORTS:

$N_d = 2308/3$

$= 769\#$

$V_d = 366/3$

$= 122\#$

COMBINED LOADING:

$$\left(\frac{769}{1840}\right)^{5/3} + \left(\frac{122}{2760}\right)^{5/3} \leq 1.0$$

$0.234 + 0.006$

$0.240 < 1.0$ ok USE 1/2" ϕ ANCHORS

CHECK BLOCK SUPPORT TUBE:

"A" BLOCK WT.:

$150\ \#/FT^3 \times 7.5 \times 3.0 \times 1.5 = 5063\#$

PER SQUARE FOOT LOAD = $150(1.5) = 225\ \#/FT^2$

LIVE LOAD $= 150\ \#/FT^2$

$375\ \#/FT^2$

$= 2.604\ \#/IN^2$

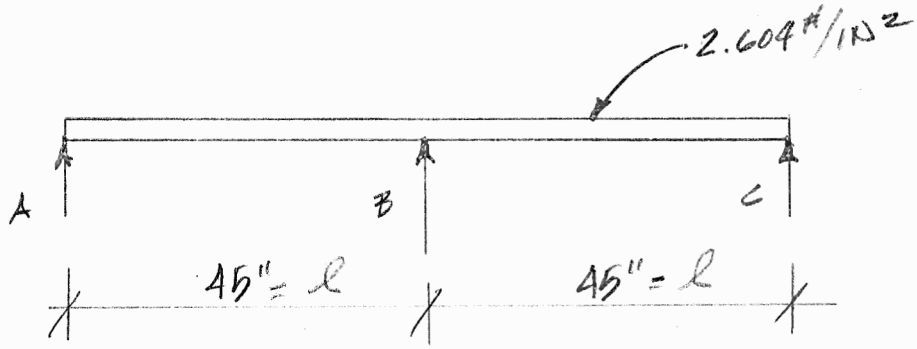

$R_A = R_C = \frac{3}{8} w\ell$
$= \frac{3}{8}(2.604)(45)$
$= 43.94\ \#/IN$

$R_B = 1.25 w\ell$
$= 1.25(2.604)(45)$
$= 146.475\ \#/IN$

ULTIMATE LOADS:

$225(1.4) + 150(1.7) = 570\ \#/FT^2 = 3.958\ \#/IN^2$

BENDING:

$M_{ULT\ MAX} = -\frac{1}{8} w\ell^2$ OVER CENTER SUPPORT

$= -\frac{1}{8}(3.958)(45)^2$

$= 1001.9\ \#\text{-}IN/IN$

FOR 36" BLOCK WIDTH $M_{ULT\ MAX} = 36(1001.9)$

$= 36068\ \#\text{-}IN$

REINF. STEEL @ TOP BLOCK = 3-#7 BARS

$A_s = 3(0.60) = 1.8\ IN^2$

$d = 18" - (2.75) = 15.25"$

$a = A_s f_y / 0.85(f'_c)(b) = \frac{1.8(60{,}000)}{0.85(5000)(36)}$

$= 0.706"$

$\phi M_u = \phi A_s f_y (d - a/2) = 0.9(1.8)(60{,}000)(15.25 - \frac{0.706}{2})$

$= 1{,}447{,}988\ \#\text{-}IN$

$M_u = 36(1001.9) = 36{,}068\ \#\text{-}IN < 1{,}447{,}988$ OK

SHEAR:

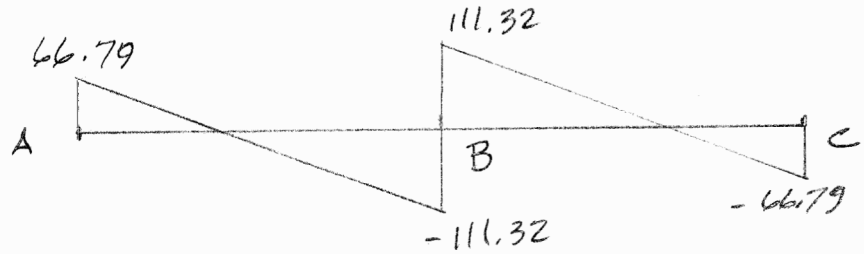

ULTIMATE LOADS:

$R_A = R_C = \frac{3}{8} w l = \frac{3}{8}\, 3.958(45)$
$= 66.79\ \#/IN$

$R_B = 1.25\, w l = 1.25(3.958)(45)$
$= 222.64\ \#/IN$

TOTAL MAXIMUM ULTIMATE SHEAR $= 36(111.32)$
$= 4007.5\#$

$V_u \leq \phi V_n$ (ACI 11.1.1)

$\phi = 0.85$ (ACI 9.3.2.3)

$V_u = 4007.5\# = 4007.5 / 36(15.25)$
$= 7.3$ PSI

$V_n = V_c + V_s$

$V_c = 2\sqrt{f'c}\ b_w d = 2(\sqrt{5000})(36)(15.25)$
$= 77640\#$

$V_{c\,max} = 3.5\sqrt{f'c}\ b_w d = 3.5\sqrt{5000}\,(36)(15.25)$
$= 135{,}871\# > 77640\#$

USE $77{,}640\#$

11.5.6.2:

$V_s = \frac{A_v f_y d}{s} = \frac{2(0.20)(60000)(15.25)}{15}$
$= 24\,400\#$

11.5.6.8:

$V_{s\,max} = 8\sqrt{f'c}\ b_w d = 8\sqrt{5000}\,(36)(15.25)$
$= 310\,561\# > 24\,400\#$

USE $24{,}400\#$

$\phi V_n = 0.85(77\,640 + 24\,400) = 86\,734\# > 4008\#$ ok

6X6 ALUMINUM TUBES:

MAXIMUM LOAD ON CENTER TUBE = 146.5 #/IN

AREA OF VERTICAL SIDES = 2(6)(0.5)
= 6 IN²

COMPRESSIVE STRESS = 146.5/6
= 24.4 psi

ALLOW. LOAD:

$L = 6''$ $r = \sqrt{\frac{d_1^2 - d_2^2}{12}} = \sqrt{\frac{6^2 - 5^2}{12}} =$
$= 0.957$

$L/r = 6/0.957 = 6.27 < 9.5$

∴ Fa allow. = 19 KSI = 19000 psi (P. 40)

19000 psi < 24.4 psi ok

TRY 6x6x1/4 TUBE

$r = \sqrt{\frac{6^2 - 5.5^2}{12}} = 0.692$

$L/r = 6/0.692 = 8.67 < 9.5$

∴ Fa allow = 19 KSI

AREA OF VERT. SIDES = 2(6)(0.25)
= 3.00 IN²

146.5/3 = 48.8 psi
< 19000 psi ok

HORIZONTAL BENDING ABOUT WEAK PLATE AXIS:
USE 10% VERT. LOAD:
10% 146.5 = 14.65 #/IN

M = 14.65 x 6" = 87.9 #-IN

$S_y = 1(0.25)^2/6 = 0.010$ IN³

$f_b = 87.9/0.010 = 8438$ psi

ALLOW. = 28 KSI = 28,000 PSI > 8438 psi
OK

USE 6x6 x 1/4 TUBE

REDESIGN OF SHIELD BLOCK FLOOR SUPPORTS:

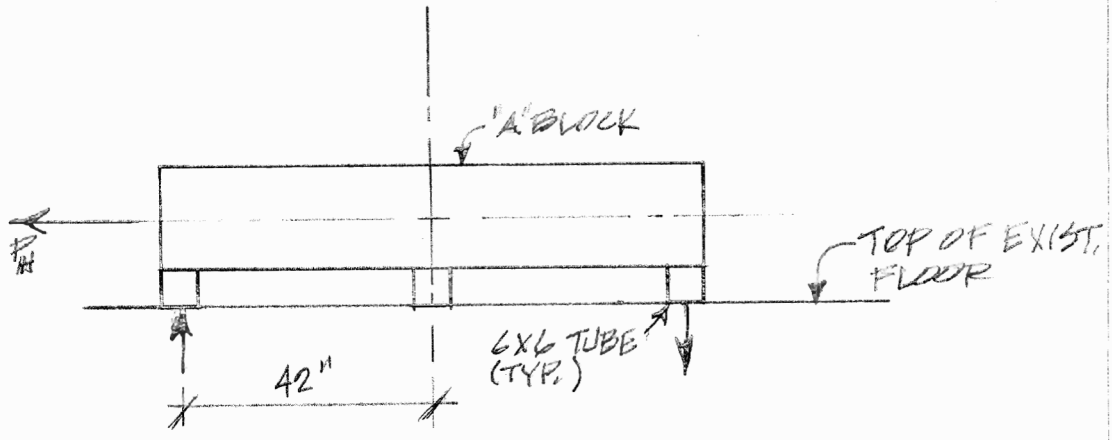

"A" BLOCK WT. $= 1.5(3.0)(7.5)(150) = 5063^{\#}$
LIVE LOAD $= 3.0(7.5)(100^{\#}/FT^2) = 2250^{\#}$ (NOTE REDUCED LIVE LOAD FROM $150^{\#}/FT^2$)

USE HORIZ. LOAD, P_H, = 10% VERT. LOAD:

$10\%(5063 + 2250) = 731^{\#}$ PER "A" BLOCK

HORIZ. MOMENT $= (18''/2 + 6'')\cdot 731$
$= 10\,965$ #-IN

RESISTING MOMENT ARM $= 7.5'(12) - 6''$
$= 84''$

VERT. LOAD CAUSED BY HORIZ LOAD =
$\pm\ 10{,}965/84 = \pm 131^{\#}$

SHIELD BLOCK DEAD LOAD $= 5063^{\#}$
BEAM LOAD $= 5063^{\#}/90''$
$= 56$ #/IN

END REACTION $= 3/8\, w\ell = 3/8(56)(45)$
$= 949^{\#} > 131^{\#}$ ∴
HORIZONTAL LOAD DOES NOT CAUSE UPLIFT

HORIZONTAL LOAD IN PERPENDICULAR DIRECTION:
CENTER TUBE WILL NOT CARRY LOAD

$3(5063 + 2250)/90'' = 244$ #/IN

$244(90/2) = 10\,980^{\#}$

10% HORIZ LOAD $= 0.10(10980) = 1098^{\#}$ PER SIDE

USE 2 BOLTS PER BLOCK EACH SIDE

EXPANSION ANCHORS IN FLOOR:

SHEAR LOAD PER ANCHOR:

SHORT SIDE = 731/(2 SIDES x 2 BOLTS)
= 183#/BOLT

LONG SIDE = 1098/6 BOLTS
= 183#/BOLT

TRY 1/2"ϕ STEEL "HILTI" DROP-IN ANCHORS:

ALLOWABLE SHEAR IN 4000 psi CONC. = 2125#/BOLT
SPACING > 7" ∴ NO REDUCTION
NO EDGE DISTANCE ∴ NO REDUCTION

RESULTANT LOAD = $\sqrt{183^2 + 183^2}$
= 259# < 2125# OK

EXPANSION ANCHORS IN SHIELD BLOCK

LONG SIDE SHEAR = 1098/6
= 183#/BOLT

TENSION SHORT SIDE = 731/2 BOLTS
= 366#/BOLT

SPACING > 7" ∴ NO REDUCTION

EDGE DISTANCE = 4.625 < 7"
∴ REDUCTION REQ'D

SHEAR = 0.74 ALLOW = 0.74(2125) = 1573#
TENSION = 0.85 ALLOW. = 0.85(1785) = 1517#

$183/1575 + 366/1517 \overset{?}{\leq} 1.0$
0.358 < 1.0 OK

USE 1/2"ϕ DROP-IN ANCHORS

ANCHOR MOUNTING BRACKET

ALL PLATES 1/2" 6061 T6
ALL HOLES 9/16" ϕ

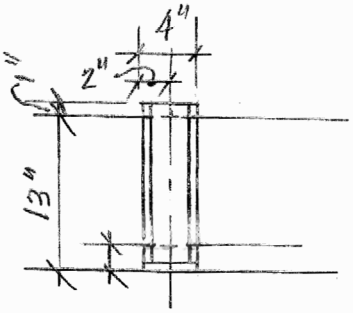

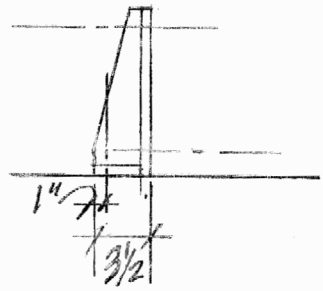

$P_H = 366''$

$M = 366(13)$
$= 4758$ #-IN

$S_{PL} = 0.5(3.5)^2/6$
$= 1.02 \text{ IN}^3$

$f_b = 4758/1.02$
$= 4665$ psi

CHECK GUSSET
$t = 1/2''$ $d = 3.5''$ $d/t = 3.5/1/2 = 7$

FROM ALUMINUM HANDBOOK, P 40 FOR 6061-T6 ALUMINUM:

$\sqrt{L_b/d} = \sqrt{13/3.5}$
$= 1.93$

$d/t\sqrt{L_b/d} = 7(1.93)$
$= 13.49 < S_1 = 26 \therefore F_b = 16{,}000$ psi

4665 psi < 16,000 psi ok

CHECK BACK PLATE
$t = 1/2''$ $d = 3''$ $d/t = 3/1/2 = 6$

$\sqrt{L_b/d} = \sqrt{13/3}$
$= 2.08$

$d/t = 3/0.5$
$= 6$

$d/t\sqrt{L_b/d} = 6(2.08)$
$= 12.48 < S_1 = 26 \therefore F_b = 16000$ psi

$M = 183(13) = 2379$ #-IN

$S_{PL} = 0.5(3)^2/6$
$= 0.75 \text{ IN}^3$

$f_b = 2379/0.75 = 3{,}172$ psi < 16,000 psi ok

ANCHOR MOUNTING BRACKET (CONT.)

WELDS:

FROM TABLE 7.2-2 p. 1-A-66 ALUM. DESIGN MANUAL
ALLOW. SHEAR STRESS IN FILET WELDS = 7.0 KSI

FOR 1/16" WELD:

$$F_W = 7.0(.707)(1/16)$$
$$= 0.31 \text{ K/IN}$$

FOR 3/16" WELD:

$$F_W = 7.0(.707)(3/16)$$
$$= 0.928 \text{ K/IN}$$

BOTTOM PLATE TO BACK PLATE

WELD LENGTH = 3"

$$P_H = 3(0.928)$$
$$= 2.8^K = 2{,}800^\# > 366^\# \quad \underline{OK}$$

BOTTOM PLATE TO GUSSETS

WELD LENGTH = 2(3")
= 6"

$$P_H = 6(0.928)$$
$$= 5.6^K = 5{,}600^\# > 366^\# \quad \underline{OK}$$

USE 3/16" WELDS