Fermilab

Particle Physics Division

Mechanical Department Engineering Note

Number: MD-ENG-167 Date: September 24, 2008

Project: MINERVA

Project Internal Reference:

Title: Transformer Relocation Platform

Author(s): R.J. Woods

Reviewer(s): D. Poshka 9/25/08

Key Words: MINERVA, Electrical Transformer, Support Platform, Structural

Abstract/Summary:

This note contains the structural calculations for a platform that will support a relocated electrical transformer approximately 8'-9" above the MINOS tunnel floor. The transformer outside dimensions are 37 ¼ " high, 30" wide, and 24" deep with a design load of 800 pounds. The platform is also designed for a 25 pound per square foot live load to accommodate the servicing of the transformer by two electricians.

The stand will be fabricated from ASTM A36 structural steel members and connected by shop welding and field bolting. The bolts shall be ASTM grade 5.

Applicable Codes:

Manual of Steel Construction 9th edition AISC

ACI 318-02 Building Code and Commentary

HILTI North America Product Technical Guide

TRANSFORMER WEIGHT = 780# (SAY 800#)

NEW PLATFORM LIVE LOAD = 25#/FT2

NEW PLATFORM DEAD LOAD = 7#/FT2

PLATFORM LOAD = (25+7) = 32#/FT2 = 0.22#/IN2

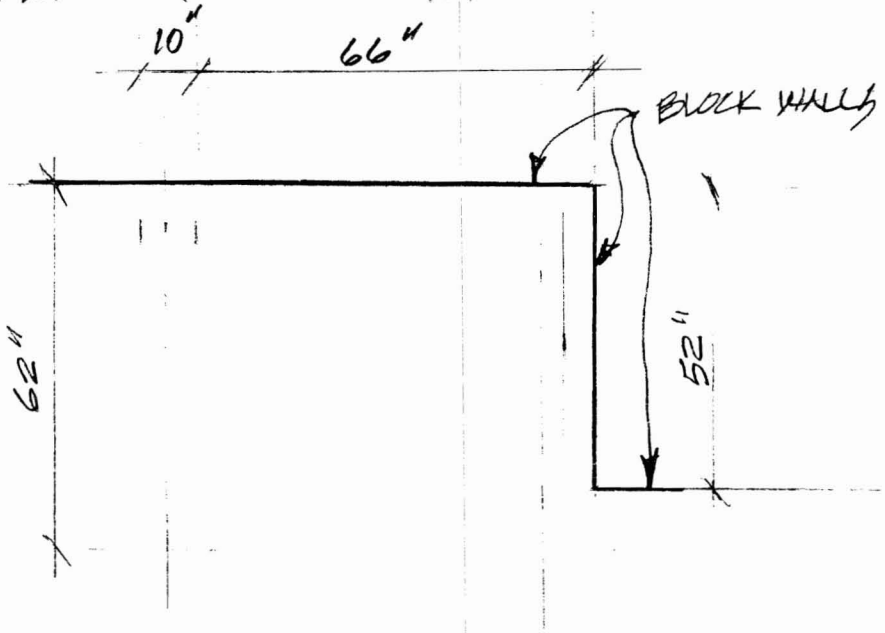

PLAN

END BEAMS:

MAX. SPAN = 62"

ASSUME TOTAL LOAD OF TRANSFORMER CARRIED ON ONE BEAM (CONSERVATIVE)

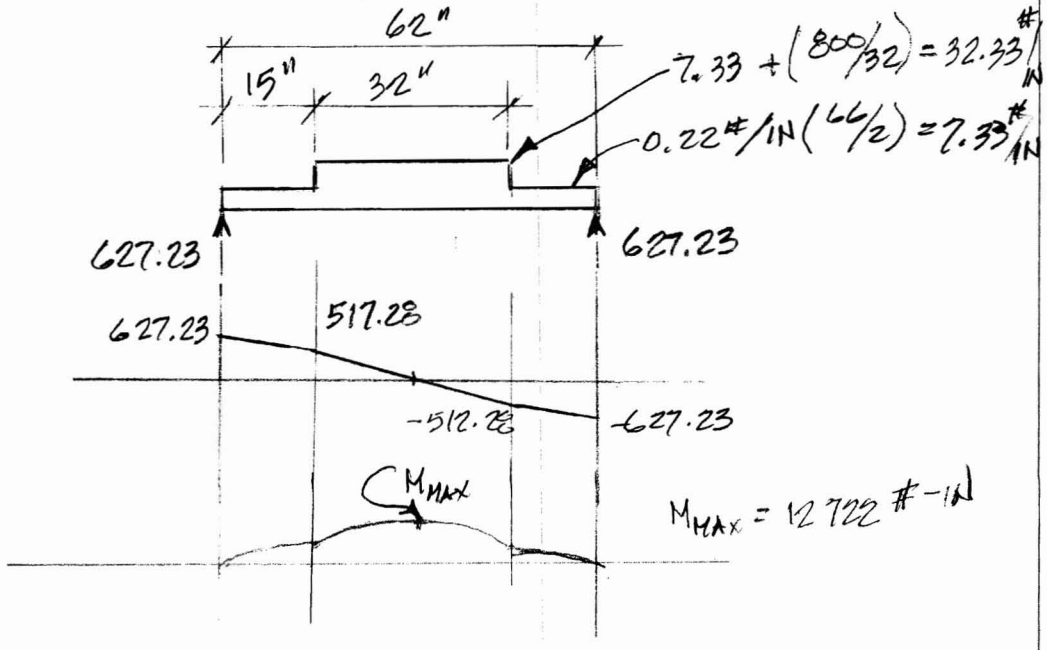

$$M_{MAX} = (627.23 + 517.28)(15)/2 + 517.28(16)/2$$
$$= 8584 + 4138$$
$$= 12722 \text{ \#-IN}$$

PRELIMINARY MEMBER REQUIREMENTS:

ASSUME $F_b = 0.60 F_y$
$= 0.60(60)$
$= 21.6$ KSI

$S_x = M/F_b = 12722/21{,}600$
$= 0.59 \text{ IN}^3$

ASSUME $F_v = 0.40 F_y$
$= 0.40(36)$
$= 14.4$ KSI

$A_{MIN} = 627.23/14{,}400$
$= 0.04 \text{ IN}^2$

BEAM END BEARING ON SLAB:

BEARING STRENGTH $= \phi(0.85 f'_c)$ ACI 318-02
$= 0.65(0.85(3000))$
$= 1658$ PSI

MIN BRG AREA $= 627.33/1658$
$= 0.38 \text{ IN}^2$

COLUMNS:

MAX COLUMN HT $= 104.75''$ $\quad Kl = 1.0(104.75/12) \approx 9.0'$
MAX COLUMN LOAD $= 627.23\# +$ COL. WT (SAY $1000\#_{TOTAL}$)

FROM AISC MANUAL P3-43:
FOR $Kl = 9.0$ 3x3x3/16 TUBE ALLOW.
LOAD $= 31^K = 31{,}000\#$
$> 1{,}000\#$ OK

FROM AISC MANUAL P3-36:
FOR $Kl = 9.0$ 3" ϕ SCHED 40 PIPE ALLOW.
LOAD $= 31^K = 31{,}000\#$
$> 1{,}000\#$ OK

CHECK MEMBERS SELECTED:

PLATFORM PLATE:

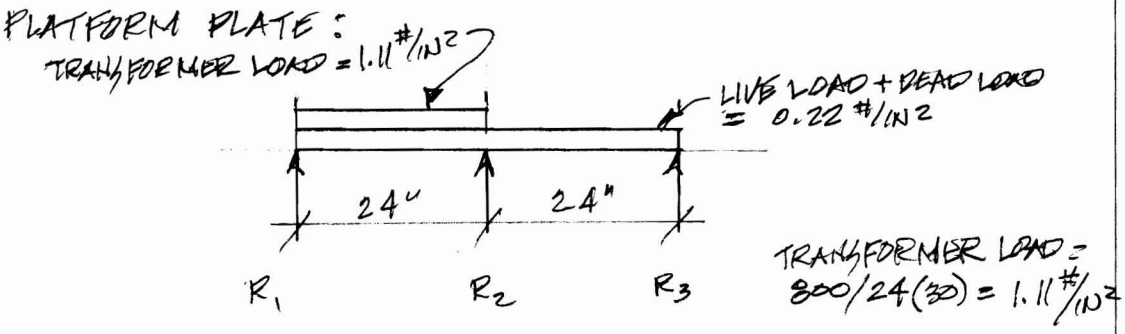

$R_1 = 3/8\, w_1 L + 7/16\, w_2 L$
$= 3/8(0.22)(24) + 7/16(1.11)(24)$
$= 1.98 + 11.66$
$= 13.64$ #/IN

$R_2 = 1.25\, w_1 L + 5/8\, w_2 L$
$= 1.25(0.22)(24) + 5/8(1.11)(24)$
$= 6.60 + 16.65$
$= 23.25$ #/IN

$R_3 = 3/8\, w_1 L - 7/16\, w_2 L$
$= 3/8(0.22)(24) - 7/16(1.11)(24)$
$= 1.98 - 1.67$
$= 0.31$ #/IN

FOR 3/8" THICK PLATE, MAX SHEAR = 23.25/0.375
= 62 psi/IN

ALLOW. SHEAR = 0.40 (36,000) AISC F4 p 5-49
= 14,400 psi > 62 psi OK

M_{MAX} FOR TRANSFORMER @ $x = 7/16\, L = \frac{49}{512}(w_2)(L)^2$
$= 0.0957(1.11)(24)^2$
$= 61.2$ #-IN

M_{MAX} FOR DL+LL @ $x = 7/16\, L$
$= 10.5"$
$1.98\,(10.5)/2$ 10.4 #-IN

TOTAL $M_{MAX} = 61.2 + 10.4$
$= 71.6$ #-IN

S_x REQ'D $= M/F_b = 71.6 / 0.75(36{,}000)$ AISC F2.1 p5-48
$= 0.0027$ IN³

S_x FURNISHED $= (3/8)^2/6 = 0.0237 > 0.0027$ OK

USE 3/8" THICK STEEL PLATE

PLATE SUPPORT CHANNELS:

CHANNEL SIZE = C4 x 5.4 $A = 1.59 IN^2$ $S_x = 1.93 IN^3$

SPAN = 63"

END REACTIONS = 23.25(63)/2
= 732#

f_v = 732/1.59
= 460 psi < 0.75(36,000)
460 < 27,000 ok

M_{MAX} = $wl^2/8$
= 23.25 (63)²/8
= 11,535 #-IN

f_b = M/S
= 11,535/1.93
= 5,915 psi

FROM AISC ALLOWABLE BEAM LOAD TABLES P 2-88
FOR A C4 x 5.4 CHANNEL, ALLOWABLE LOAD
FOR 6'-0 SPAN = 4.6 K/FT
= 4,600#/FT
ACTUAL LOAD = 23.25(12) = 279#/FT < 4,600#/FT
ok

USE C4 x 5.4 CHANNEL

CHANNEL SUPPORT END BEAMS:

BEAM SIZE = W8 x 10 $A = 2.96 IN^2$ $S_x = 7.81 IN^3$

MAXIMUM SHEAR FROM PAGE 1 = 627.23#
f_v = 627.23/2.96
= 212 psi

ALLOWABLE F_v = 0.40(36,000)
= 14,400 psi > 212 psi ok

MAXIMUM BENDING MOMENT FROM PAGE 2 = 12 722 #-IN

$f_b = 12722/7.81$
$= 1629$ psi

FIND L_c:

$76\, b_f/\sqrt{3L} =$ AISC F1.1 p 5-45

$76(3.94)/\sqrt{3L} = 49.9''$ ← USE

$20{,}000/(d/A_f)(3L) =$

$20{,}000/9.77(36) = 56.9''$

SINCE UNBRACED LENGTH (62") IS GREATER THAN L_c (49.9")

$F_b = \dfrac{12 \times 10^3 C_b}{Ld/A_f}$ AISC F1-8 P 5-47

$= \dfrac{12 \times 10^3 (1)}{62(9.77)}$

$= 19.8$ KSI

$S_{X\,REQ'D} = M/F_b$

$= 12722/19{,}800$

$= 0.64\ IN^3 < 7.81$ ok

USE W 8 x 10 BEAM

COLUMNS:

COLUMN SIZE = TS 4 x 4 x 0.250 $A = 3.59\ IN^2$ $r = 1.51$ IN

$Kl/r = 1.0(104.75)/1.51$
$= 69$ $C_c = 126.1$ AISC TAB 4 p5-120

$Kl/r < C_c$ THUS,

$$F_a = \frac{\left[1 - \frac{(Kl/r)^2}{2C_c^2}\right]F_y}{5/3 + \frac{3(Kl/r)}{8C_c} - \frac{(Kl/r)^3}{8C_c^3}} = \frac{\left[1 - \frac{(69)^2}{2(126.1)^2}\right]36}{5/3 + \frac{3(69)}{8(126.1)} - \frac{69^3}{8(126.1)^3}}$$

$= 16.5$ KSI

$F_a = 16.5(3.59) = 59^K = 59{,}000^\# > 627^\#$ ok

USE TS 4 x 4 x 0.250

COLUMN BASE PLATE:

COLUMN LOAD = 627# + COLUMN WT.
= 627 + 104.75/12 (12.21)
= 734#

PLATE SIZE = 8" x 6"

BEARING PRESSURE = 734/8(6)
= 15.3 psi

FROM AISC SPECIFICATION SECT. J9

$F_p = 0.35 f'_c$
$= 0.35(4000)$
$= 1400$ psi > 15.3 OK

$m = (N - 0.95d)/2$
$= 8 - 0.95(4)/2$
$= 2.1"$

$n = (B - 0.80d)/2$
$= 6 - 0.80(4)/2$
$= 1.4"$

SET $\lambda = 1.0$ & $n' = \frac{\sqrt{d b_f}}{4}$

$\lambda n' = 1.0 \frac{(\sqrt{4(4)})}{4}$

$\lambda n' = 1.0$

PLATE THICKNESS $= 2c\sqrt{\frac{f_{10}}{F_y}}$

$= 2(2.1)\sqrt{\frac{15.3}{36000}}$

$= 0.09$ IN

USE 1/4" THICK PLATE

WELD SIZE:

FOR 3/16" WELD F_3/IN = 0.3(70)(.707)(3/16)
2.78K/IN = 2780#/IN

1" OF WELD EXCEEDS LOADS ON THIS STRUCTURE

USE 3/16" WELD SIZE TYP.

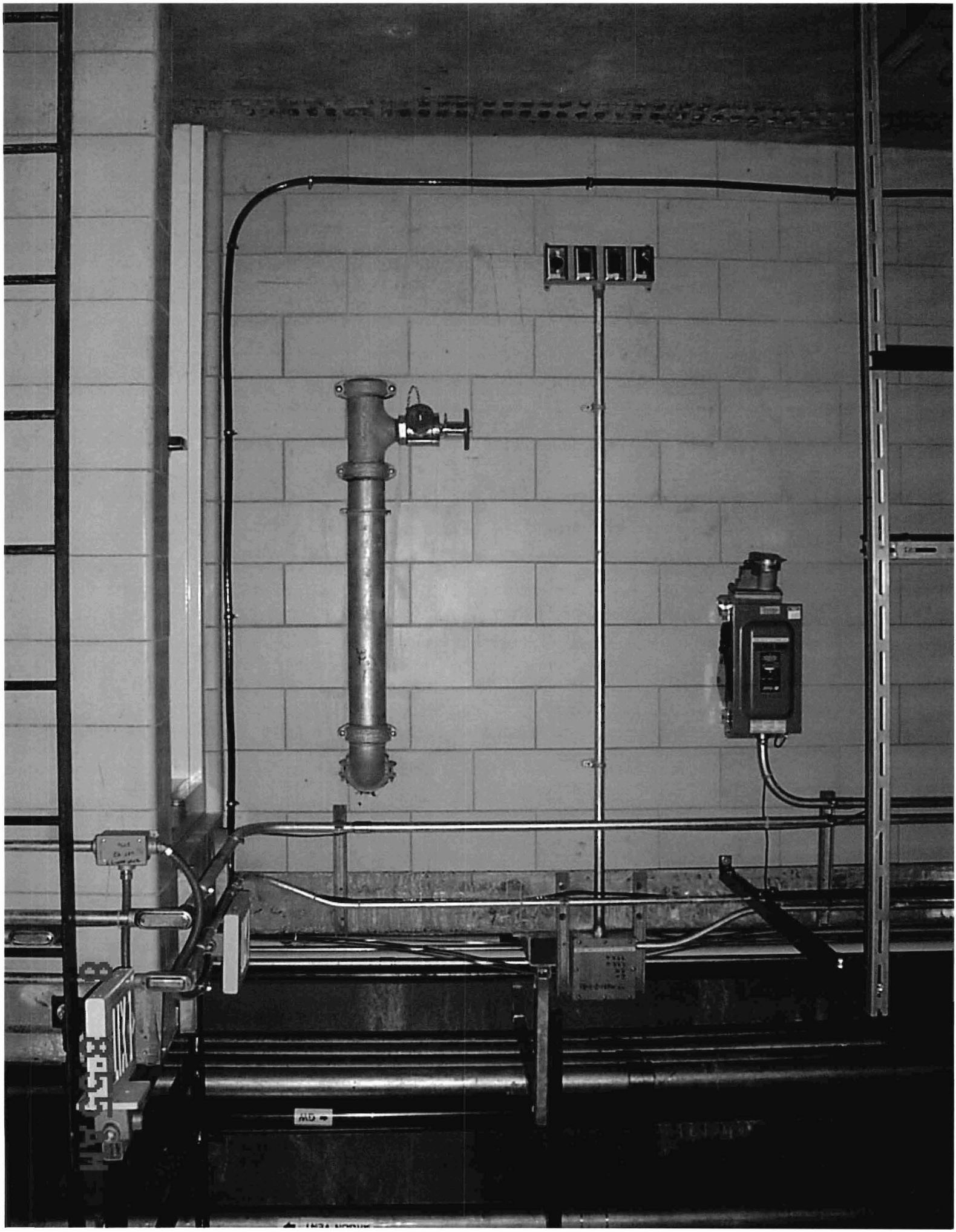

TR-PHF-MNAI-2-HA

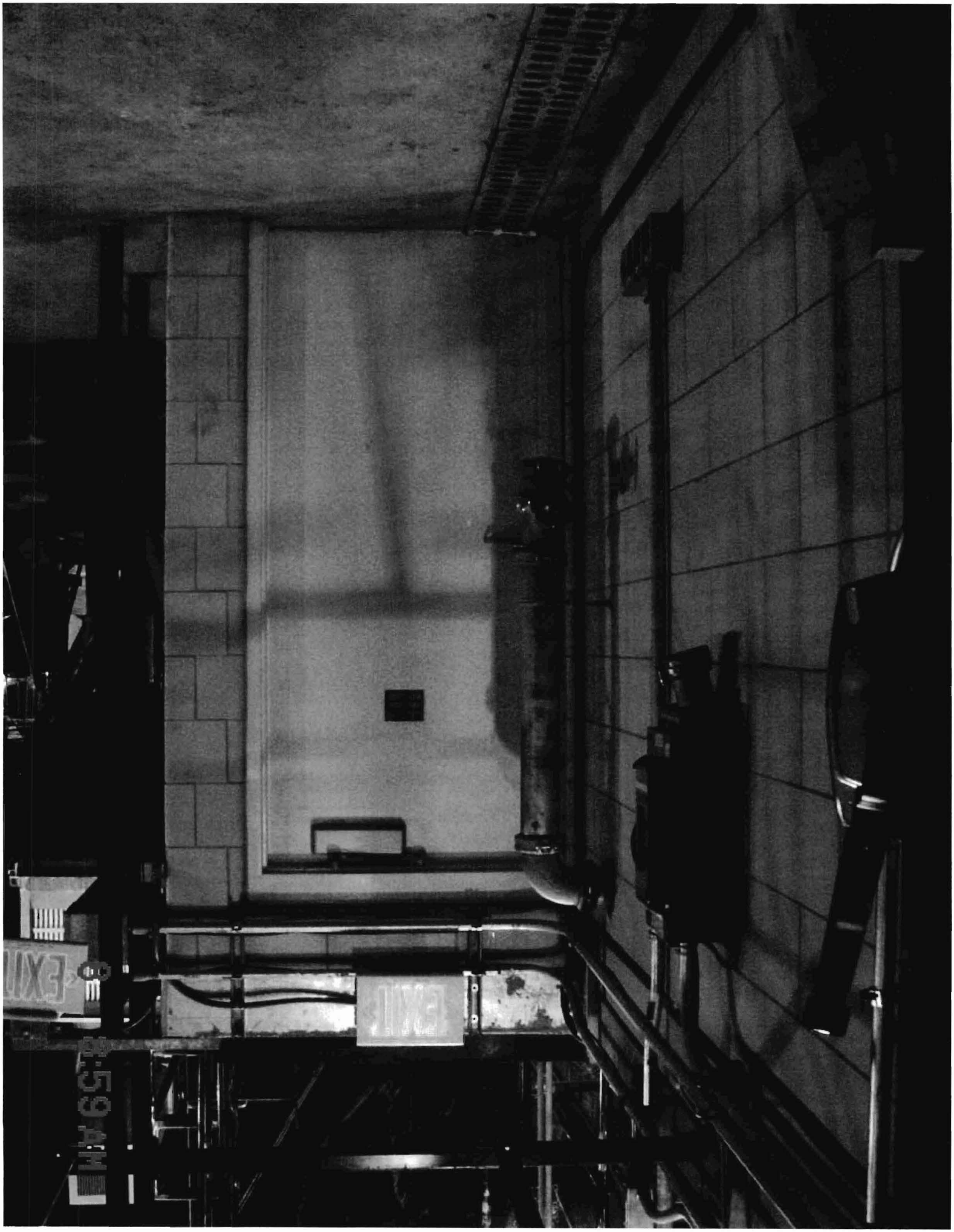
EXIT
EXIT

8 9:00 AM

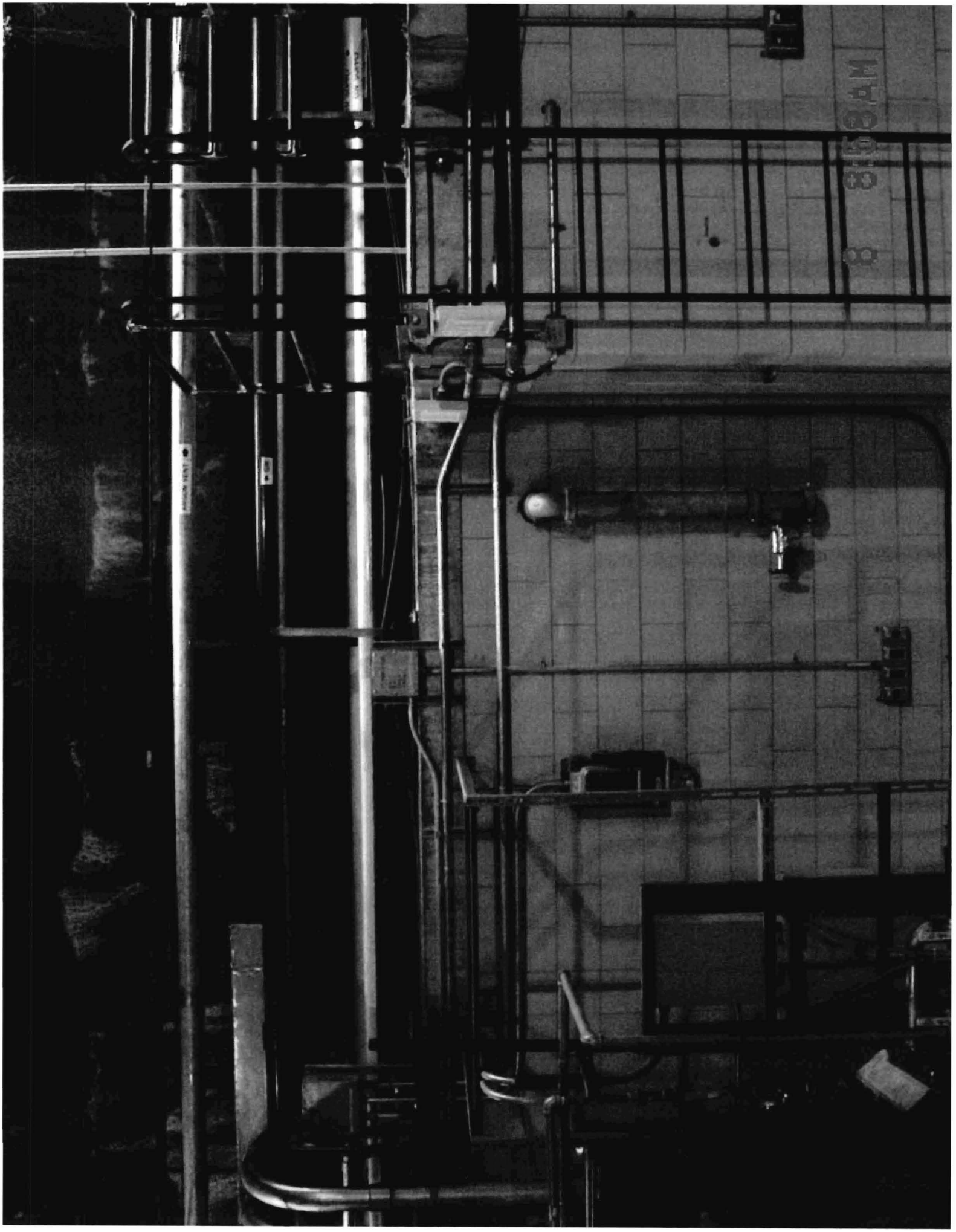

GW

REV	DESCRIPTION	DRAWN	DATE
		APPROVED	DATE

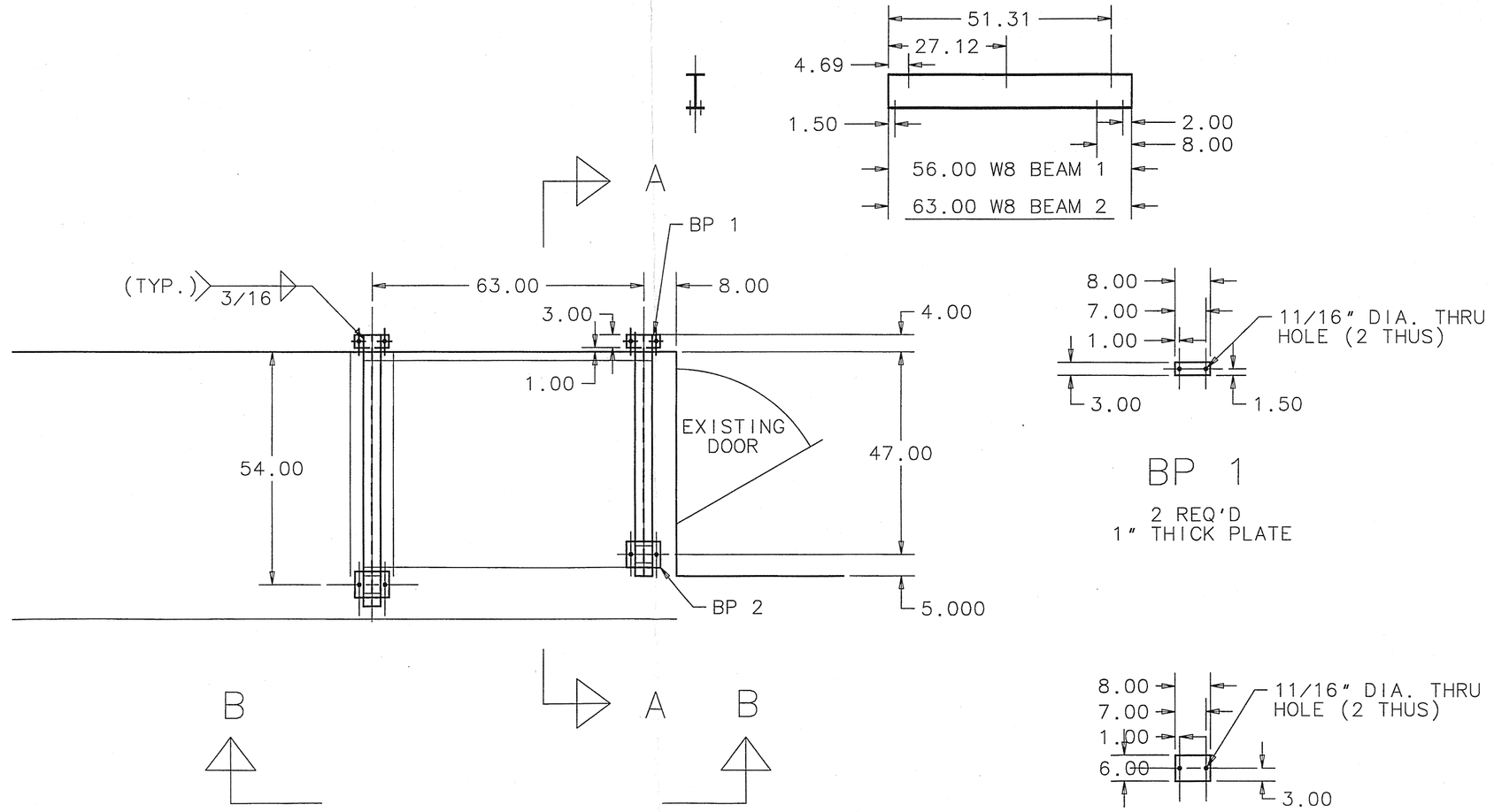

PLAN

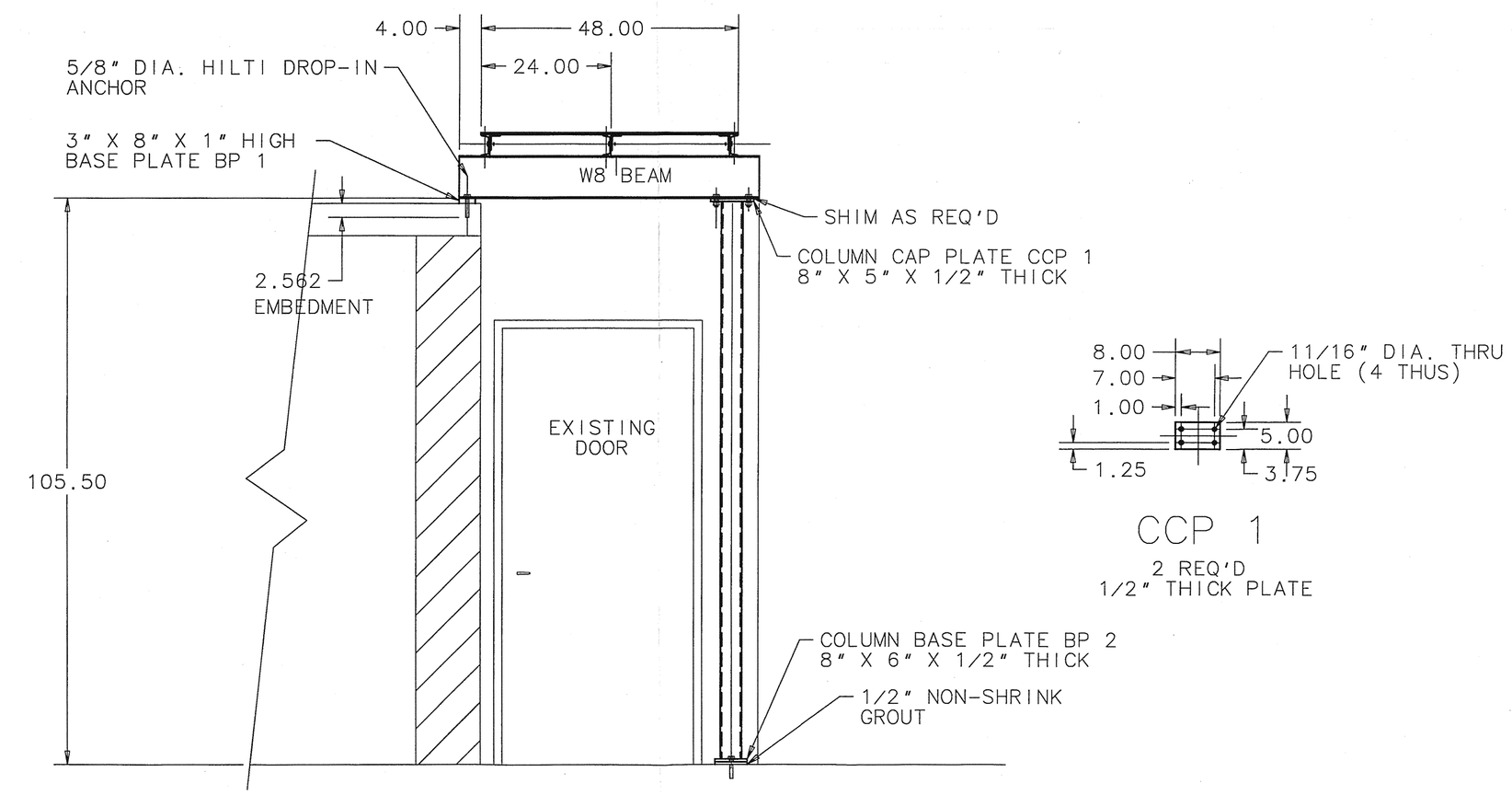

SECTION A-A

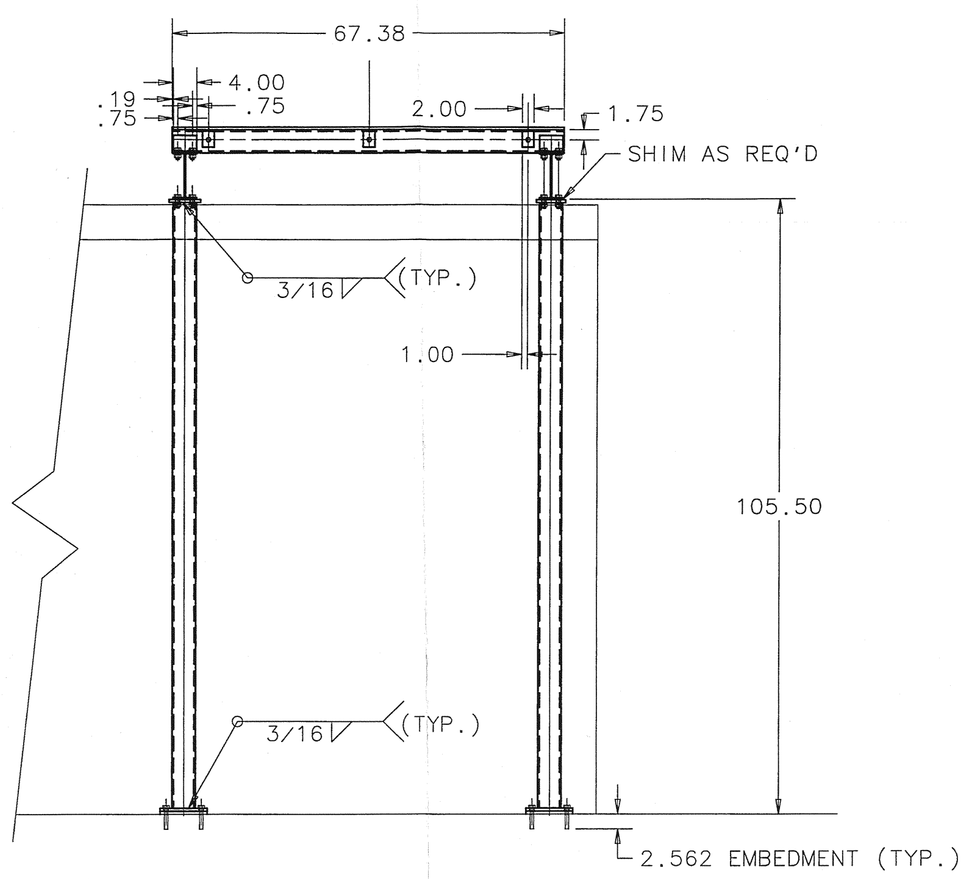

SECTION B-B

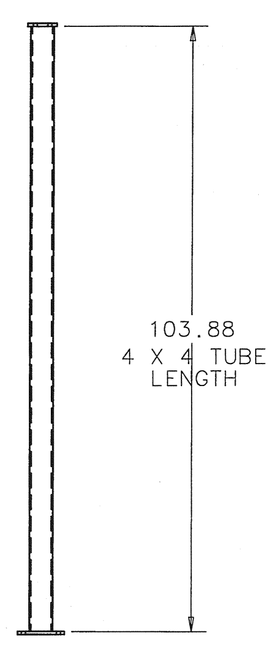

4 X 4 TUBE

2 REQ'D

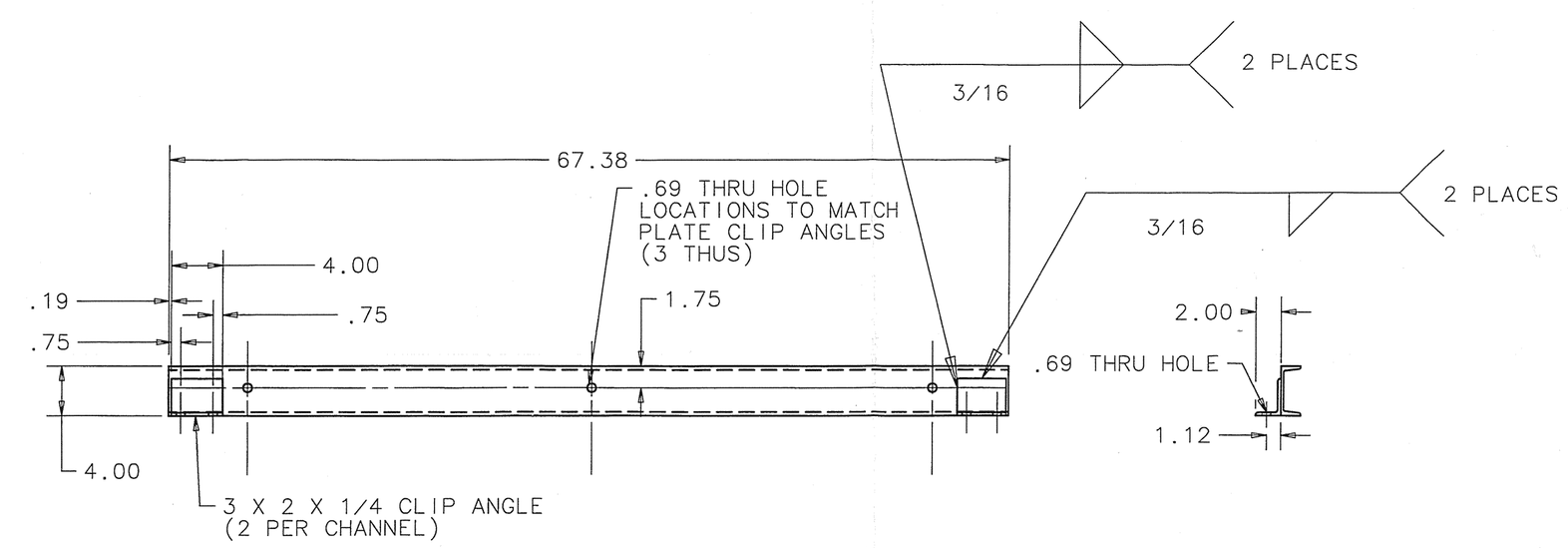

C4 CHANNEL

3 REQ'D

UNLESS OTHERWISE SPECIFIED			ORIGINATOR		
			DRAWN		
±	±	±	CHECKED		
1. BREAK ALL SHARP EDGES MAX.			APPROVED		
2. DO NOT SCALE DRAWING. 3. DIMENSIONS BASED UPON			USED ON		
4. MAX. ALL MACH. SURFACES √			MATERIAL		
5. DRAWING UNITS:					

FERMI NATIONAL ACCELERATOR LABORATORY
UNITED STATES DEPARTMENT OF ENERGY

SCALE	DRAWING NUMBER	SHEET	REV
	. — —	1 OF 1	

CREATED WITH : GROUP: