Fermilab

Revision 1.0

Particle Physics Division

Engineering and Technical Teams

1/21/1999

Mechanical Support Engineering Note

Number: MD-ENG-148 Date:March 4, 2008

Project: Minerva Project Internal Reference:

Title: Minerva Production support stand note

Author(s): Jim Kilmer

Reviewer(s):

Key Words:

Abstract/Summary:

These are the structural calculations for the 10 foot long production support stands used to fabricate all of the Minerva frames. These stands will also serve as storage racks for the frames until they can be installed in the cavern.

Applicable Codes:

AISC Manual of Steel Construction 9th Edition.

Production support stand for Minerva construction
Jim Kilmer
February 21, 2008

This note describes the engineering calculations for the support structures used in Minerva to build and store the detector. The production stands are shown in drawing 3938.300-ME-444204. It is based on stands that were designed and used for the Minos Near detector assembly. First note that the Minos detector had planes weighing 8000 pounds with a regular spacing of 2.334 inches for a rail load of 3427.6 lb/in. We need to determine the load for the Minerva detector. The Minerva detector is made of several kinds of different planes. Here are the weights of the various types of plane.

Plane Type	Weight (lb)
Upstream HCAL	3000 lb
Lead Module	
Upstream ECAL	3000 lb
Active target	3000 lb
Downstream ECAL	3000 lb
Downstream HCAL	4500 lb
Heavy target frame	5200 lb

Use 5200 pounds with a spacing of 1.594 inches for the entire rail. This gives a load of 3262 lb/in and is very conservative as there are only three frames of this weight in the entire detector. Nominally since the detector is lighter than its original loading everything is fine. Some calculations will need to be redone for the changes. For these calculations use the American Institute of Steel Construction, Manual of Steel Construction, Ninth Edition.

Columns

The rails are 120 inches long supported by three columns on each side. Assume that all of the planes are the heaviest giving a load of 3262 lb/in. Then the total load would be

$$Wt := 3262 \cdot \frac{lb}{in} \cdot 120 \cdot in \qquad psi := \frac{lb}{in^2}$$

$$Wt = 3.914 \times 10^5\ lb$$

To get the load on the columns use page 2-311 with 2 spans and a uniform load. Also note that the weight shown above is equally divided between the two rails The columns are made from W8 X 35 wide flange beams. The cross sectional area is 10.3 square inches. Columns are also A-36 material with an Fyof 36 ksi.

$$P := \frac{3262 \cdot \frac{lb}{in} \cdot 60 \cdot in}{2}$$

P is the load on one span on one rail which is half of the rail length and only the load on one side

$$P = 9.786 \times 10^4 \, lb$$

Use Case 36 on page VII-124 of the Aluminum Design Manual. The maximum load on a column is the center column with a load of 1.25 X 97,860 lbs or 122,325 lbs.

$$\sigma comp := \frac{1.25P}{10.3 \cdot in^2}$$

$$\sigma comp = 1.188 \times 10^4 \, psi$$

Compressive stress on column

These columns have a major brace to the floor which reduces the effective length of the column. See Figure 1 on the next page. For the Y-Y direction:

$$Kl := 2 \cdot 54.5 \cdot in$$

$$Kl = 109 \, in$$

Call that 9 feet and use table on page 3-31 of the Code

Then Pallow is 186 kips for the Y-Y direction

Looking again at the column tables for a W8 X35 with 9 foot effective length the column allowable load is given as 186 kip > 122 kip so the column choice of W8 X35 is OK.

Rails

The rails are a composite of two elements. The first is a W8 X 67 Ibeam. The second is a 4 inch by 4 inch bar used as the actual support rail for the planes. It forms the alignment key for the detector on the rail. At the beginning assume that the Ibeam is the only rail section. Use Case 36 on page VII-124of the Aluminum Design Manual for a continuous beam of two equal spans with uniform load. Find the maximum moment.

$$l := 60 \cdot in$$

Length between columns on center

$$w := \frac{3262 \cdot \frac{lb}{in}}{2}$$

Load is shared with the two side rails

$$Mmax := \frac{w \cdot l^2}{8}$$

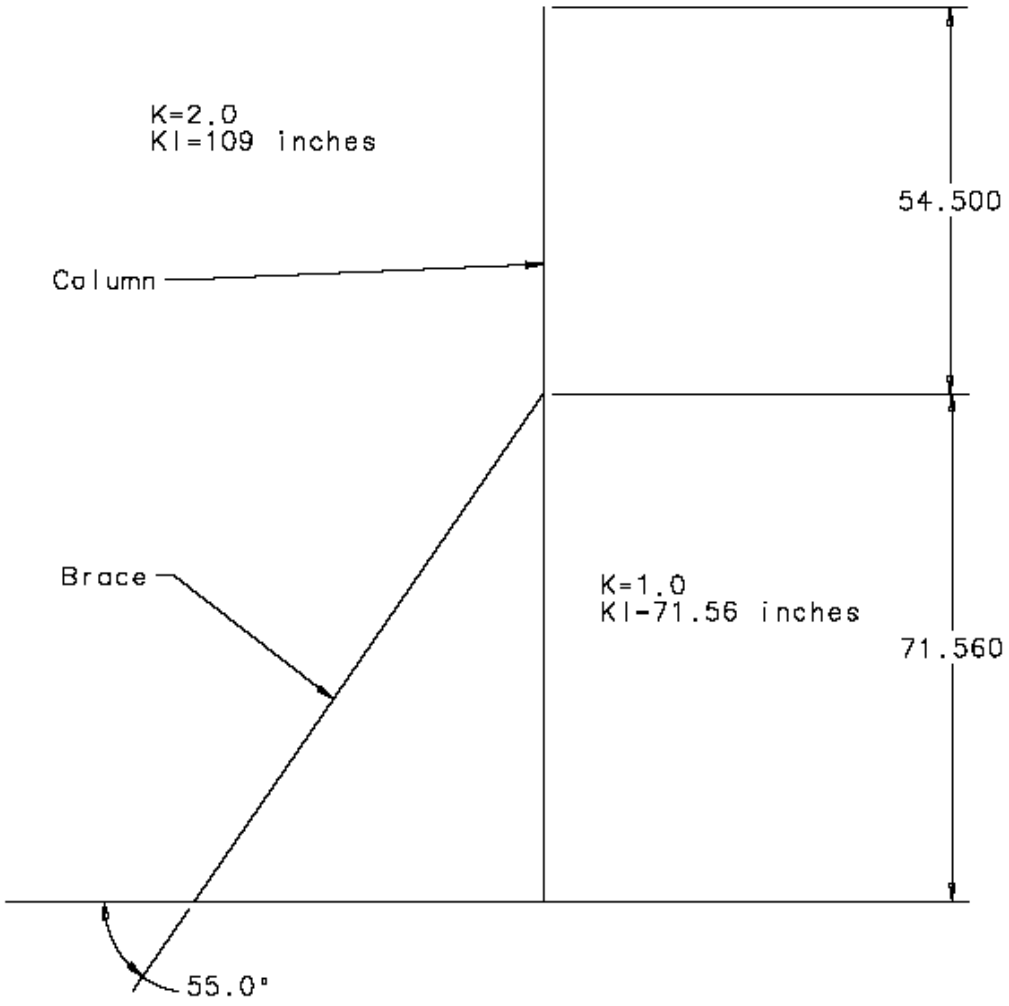
K=2.0
Kl=109 inches
54.500
Column
Brace
K=1.0
Kl-71.56 inches
71.560
55.0°

Figure 1

$Mmax = 7.34 \times 10^5 \, lb \cdot in$

For a W8 X 67 beam $\quad Sx := 60.4 \cdot in^3$

$fb := \frac{Mmax}{Sx}$ $\qquad fb = 1.215 \times 10^4 \, psi$ $\qquad$ Rail bending stress

Find the allowable bending stress Fb.

$Fy := 36000 \cdot psi$ $\qquad Fb := 0.66 \cdot Fy$ $\qquad Fb = 2.376 \times 10^4 \, psi$

Since Fb is greater than fb the beam stress is OK.

Calculate first the Ixx for the entire assembly of the rail.

	A (sq in)	x(in)	Ax (in^3)	Ix (in^4)	d (in)	Ad^2	
bar	16.00	11.00	176.00	21.33	3.59	206.21	
Ibeam	19.70	4.50	88.65	272.00	2.91	166.82	
	35.70		264.65				
					Sum of Ad^2	373.03	in^4
	neutral x=	7.41	in		Sum of Ix	293.33	in^4
					Combined Ixx	666.36	in^4

Check bending stress and deflection with combined rail section:

$E := 30 \times 10^6 \cdot \frac{lb}{in^2}$ $\qquad Ixx := 666.36 \cdot in^4$

$fbnew := \frac{Mmax \cdot 7.41 \cdot in}{666.36 \cdot in^4}$ $\qquad fbnew = 8.162 \times 10^3 \, psi$

New bending stress is much lower. Now look at deflection which is important to make sure items like axial bolts line up along the beam. The deflection formula is taken from Case 36 referenced above.

$\Delta := 0.00541 \cdot \frac{w \cdot l^4}{E \cdot Ixx}$ $\qquad \Delta = 5.72 \times 10^{-3} \, in$

This deflection is quite acceptable. Now look at shear in the beam assembly. To estimate the shear look at case 36 again. In the model the shear at the center column is the maximum

$V := \frac{5}{8} \cdot w \cdot l$ $\qquad$ $V = 6.116 \times 10^4 \, lb$

Then

$\sigma shear := \frac{V}{35.70 \cdot in^2}$ $\qquad$ $\sigma shear = 1.713 \times 10^3 \, psi$

From the AISC code the maximum allowable shear stress is 40% of Fy or 14,400 psi. This calculated shear stress is acceptable so the composite beam is OK.

BRACES

For a siesmic analysis use the total load on the support structure of 391,400 lbs. For siesmic zone 0 use10% of the total weight of the load or 39,140 lbs as the horizontal force. First look at the transverse force on the structure

This 10% horizontal load is also used to look at the design of the braces. These braces are made from 4" by 4" by 0.3125" wall structural tubing. The load hrizontally will be shared by three braces across the support. Then Fhor is only 13,047 pounds on each brace.

$Abrace := 4.36 \cdot in^2$ $\qquad$ Cross sectional area of brace

$r := 1.45$

$K := 1$ $\qquad$ Flanged ends (pinned-pinned)

$lbrace := 85.5 \cdot in$ $\qquad$ length of the brace

$\frac{K \cdot lbrace}{r} = 58.966 \, in$

Using table C-50 from page 3-17 of the AISC code for this Kl/r we find Fa=22.89 Ksi. Now find the actual compressive stress in the brace.

$Fhor := 13047 \cdot lb$ $\qquad$ $angle := \frac{55}{57.3}$ $\qquad$ $Fbrace := \frac{Fhor}{\cos(angle)}$

$fabrace := \frac{Fbrace}{Abrace}$

$fabrace = 5.217 \times 10^3 \, psi$

Since Fa>fabrace the brace is OK in compression. Note also that no account is taken of the opposing braces that will try to resist the load in tension, which would be the case after the detector is in place on the rails. This horizontal load on each brace is carried through to the anchor bolts as shear forces. Each brace has four 5/8"-11 UNC anchor bolts in the floor using Hilti Drop-in anchors. For 4000 psi concrete the stainless steel drop-in anchors will support 2630 pounds in tension and 4510 pounds in shear. Because of the anchor spacing of 7" the

allowable shear load must be reduced by 74% or 3337lb/bolt. See the Hilti Technical Guide p.136.

$Fanchor := \frac{13047 \cdot lb}{4}$ $\qquad$ $Fanchor = 3.262 \times 10^{3}\, lb$

The force Fanchor is taken up in shear and the allowable load is greater than the required load so the anchors are OK.

The longitudinal braces stiffen the upper ends of the columns and their connection to the rails enormously. The effect is that the load is taken by the columns bending at the base as a unit. Assume that the transverse floor braces provide no help to the structure. Also assume that the force of 39,140 lbs is applied to both rails so the force is shared by six columns. Model this force as acting on a cantilever as in Case 22 on page 2-303 of the AISC code.

$l_{col} := 85 \cdot in$ $\qquad$ Approximate length of column from brace to base plate

$F_{long} := \frac{39140}{6} \cdot lb$ $\qquad$ Longitudinal Force on a single column

$M_{long} := F_{long} \cdot l_{col}$ $\qquad$ Moment from longitudianl force

$M_{long} = 5.545 \times 10^{5}\, in \cdot lb$

The column resists this bending in the strong direction (Axis X-X shown in the code).

$S_x := 31.2 \cdot in^{3}$ $\qquad$ Section moment for a W8 by 35 beam

$\sigma_{long} := \frac{M_{long}}{S_x}$

$\sigma_{long} = 1.777 \times 10^{4}\, psi$ $\qquad$ Bending stress in the beam

This bending stress is less that the normal allowable stress for an A-36 member of 23.6 Ksi.

The anchor bolts must be checked for resisting the moment Mlong above. The column base plates are 14" square with bolts 1.5" in from each edge. Calculate the moment that could be supported by the bolts screwed into the floor anchors mentioned above. The bolts and anchors are in tension.

$M_{bp} := 2 \cdot 2630 \cdot lb \cdot (11 \cdot in + 1.5 \cdot in)$

$M_{bp} = 6.575 \times 10^{4}\, in \cdot lb$

Since this moment is not greater than Mlong above we will use longitudinal braces between the columns to support this moment. Braces will be at a 45 degree angle from horizontal. Also the

distance from column to column is approximately 52 inches and the bottoms of the braces are 8 inches off the floor.

Find the force horizontally at the top of the brace.

$$F_{tb} := \frac{F_{long} \cdot l_{col}}{60 \cdot in}$$

$$F_{tb} = 9.241 \times 10^{3}\,lb$$

Because of the 45 degree angle of the brace this same force of 9,241 pounds is also taken in shear by the four anchor bolts on the adjacent column. The limit on the anchors in shear is 3337 pounds. Then

$$F_{shear} := 3337 \cdot lb \cdot 4$$

$$F_{shear} = 1.335 \times 10^{4}\,lb$$

This shear limit for the bolts on the base plate are greater than the 9,241 pounds required so the bolts will do the job.

The compression load on one of these longitudinal braces is then the horizontal force times the square root of 2.Recycled 4inch square by .25 inch wall structural tubing was used for these braces.

$$F_{bcomp} := F_{tb} \cdot \sqrt{2}$$

$$F_{bcomp} = 1.307 \times 10^{4}\,lb$$

$$L_{brace} := 52 \cdot in \cdot \sqrt{2}$$

$$L_{brace} = 73.539\,in$$

First find the allowable compressive stress for the brace using Chapter E on page 5-42 of the AISC code. Fy for structural tubing has an Fy=46 Ksd. Then from Table 4, page 5-120:

$$C_c := 111.6$$

$K := 1.0$ Brace ends flanged (or pinned).

$r := 1.51 \cdot in$ For 4"SQ by .25" wall tubing

$$K \cdot \frac{L_{brace}}{r} = 48.701$$

Since Kl/r is less that Cc use equation E2-1 to find the allowable conpressive stress on these members.

$$F_y := 46000\text{psi}$$

$$F_a := \frac{\left[1 - \frac{\left(K \cdot \frac{L_{brace}}{r}\right)^2}{2 \cdot C_c^{\,2}}\right] \cdot F_y}{\frac{5}{3} + \frac{3 \cdot K \cdot \frac{L_{brace}}{r}}{8 \cdot C_c} - \frac{\left(K \cdot \frac{L_{brace}}{r}\right)^3}{8 \cdot C_c^{\,3}}}$$

$$F_a = 2.287 \times 10^4 \text{psi}$$

Now calculate the actual compression streess on the brace.

$$f_{comp} := \frac{F_{bcomp}}{3.59 \cdot \text{in}^2}$$

$$f_{comp} = 3.64 \times 10^3 \text{psi}$$

Since 22,870 psi is greater than 3,640 psi the compression on these braces is fine.

Lastly look at the tensile load on a brace. When a horizontal force puts a compressive load on a brace the other brace on that side sees the equivalent tensile load.

$F_{btens} := F_{bcomp}$ Tensile and compressive loads are the same.

$$\sigma_{tensile} := \frac{F_{btens}}{3.59 \cdot \text{in}^2}$$

$\sigma_{tensile} = 3.64 \times 10^3 \text{psi}$ Actual tensile stress on the brace

Now find the allowable stress in tension. From Section D1, page 5-40 of the AISC code:

$$F_t := 0.60 \cdot F_y$$

$$F_t = 2.76 \times 10^4 \text{psi}$$

Since Ft is greater than σtensile above these braces are OK in tension.

REV	DESCRIPTION	DRAWN	DATE
		APPROVED	DATE

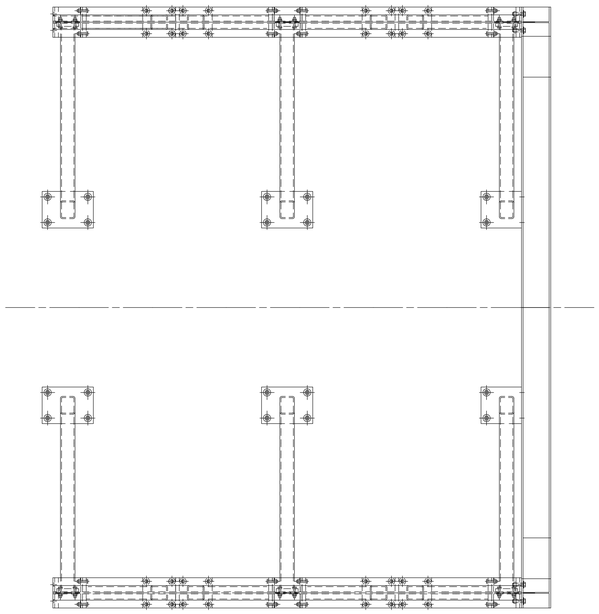

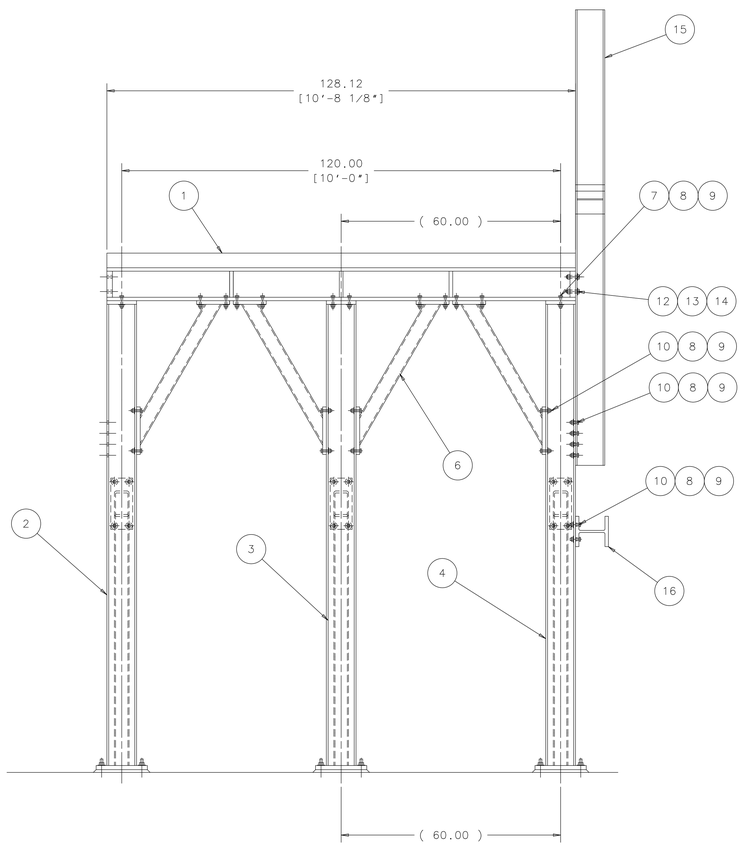

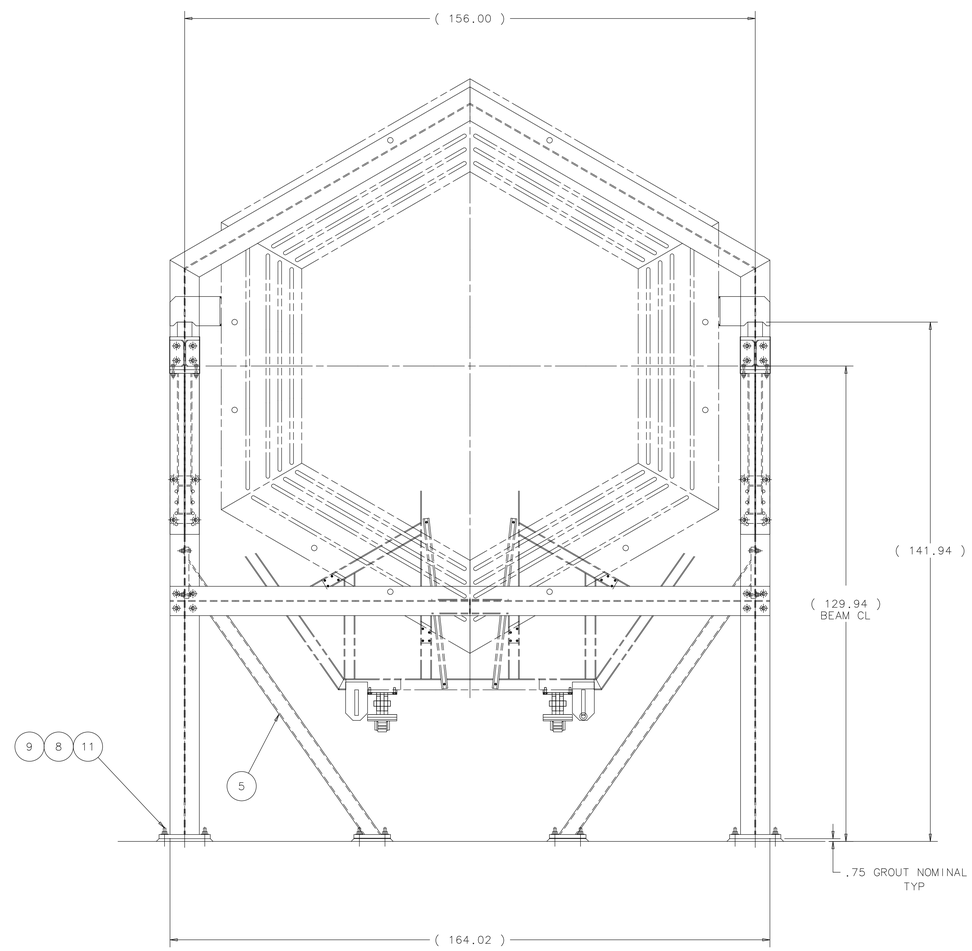

ITEM	PART NO.	DESCRIPTION OR SIZE	QTY.
16	MD-435689	TARGET PLANE SUPPORT WELDMENT	1
15	MC-435682	BOOKEND WELDMENT	1
14	COML	FLAT WASHER-3/4 SCREW SIZE STEEL	8
13	COML	3/4-10 UNC-2B HEX NUT STEEL	8
12	COML	3/4-10 UNC-2B HEX HEAD SCREW 3.00 LG.-STEEL	8
11	COML	SUPER HAS ROD,5/8 X 7 5/8, HILTI #0068659	48
10	COML	5/8-11 UNC-2A HEX HD SCREW X 2.50 LG. STEEL	64
9	COML	FLAT WASHER-5/8 SCREW SIZE STEEL	160
8	COML	5/8-11 UNC-2B HEX NUT STEEL	160
7	COML	5/8-11 UNC-2A HEX HD SCREW X 3.00 LG. STEEL	48
6	MC-444222	DIAGONAL SUPPORT WELDMENT	8
5	MC-444164	DIAGONAL STIFFENER WELDMENT	6
4	MC-444250	BOOKEND COLUMN WELDMENT	2
3	MC-444276	COLUMN WELDMENT	2
2	MC-444185	END COLUMN WELDMENT	2
1	MD-444205	SUPPORT BEAM WELDMENT	2

PARTS LIST

UNLESS OTHERWISE SPECIFIED			ORIGINATOR	J.KILMER	06-NOV-2006
.XX	.XXX	ANGLES	DRAWN	G.SMITH	06-NOV-2006
± ---	± ---	± ---	CHECKED	W.CYKO	06-DEC-2006
			APPROVED	J.KILMER	06-DEC-2006

1. BREAK ALL SHARP EDGES .015 MAX.
2. DO NOT SCALE DRAWING.
3. DIMENSIONS BASED UPON ASME Y14.5M-1994
4. MAX. ALL MACH. SURFACES
5. DRAWING UNITS: U.S. INCH

USED ON

MATERIAL
SEE PARTS LIST ABOVE

FERMI NATIONAL ACCELERATOR LABORATORY
UNITED STATES DEPARTMENT OF ENERGY

MINERVA-MECHANICAL DETECTOR
HEAVY BEAM FRAME ASSY 10 FT.

SCALE	DRAWING NUMBER	SHEET	REV
1:16	3938.300-ME-444204	1 OF 1	

CREATED WITH : Ideas12NXSeries GROUP: PPD/MECHANICAL DEPARTMENT

REV	DESCRIPTION	DRAWN	DATE
		APPROVED	DATE
A	ADDED ITEM 3 P/N,	G. SMITH	12-27-06
	ADDED ITEM 5	B. CYKO	12-27-06

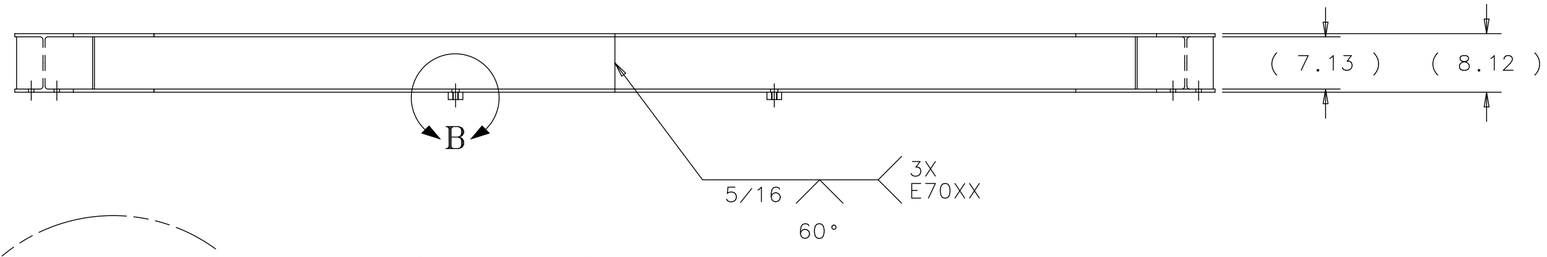

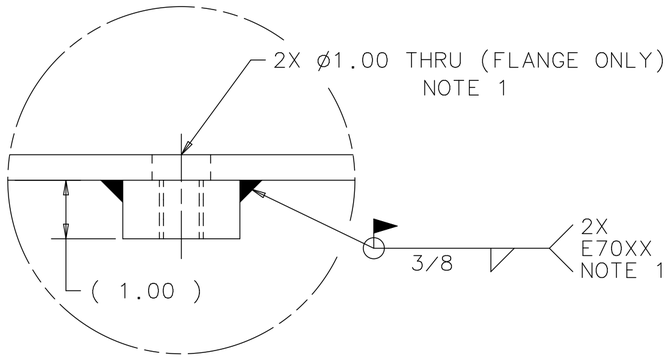

DETAIL VIEW B
SCALE :1/2

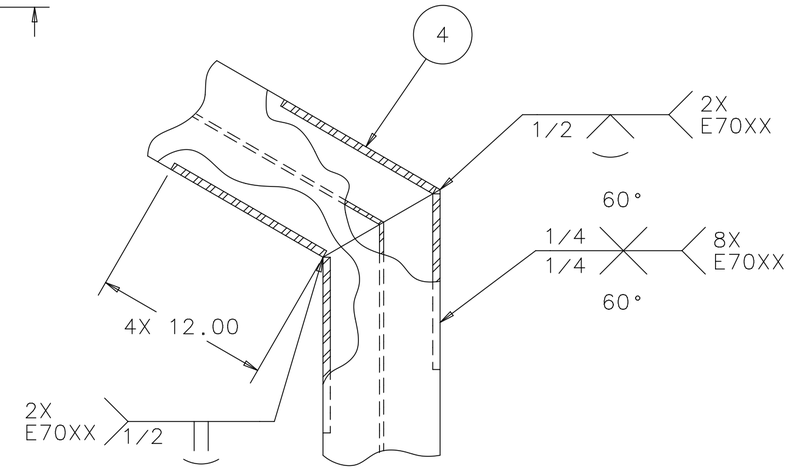

DETAIL A
SCALE: 1/8

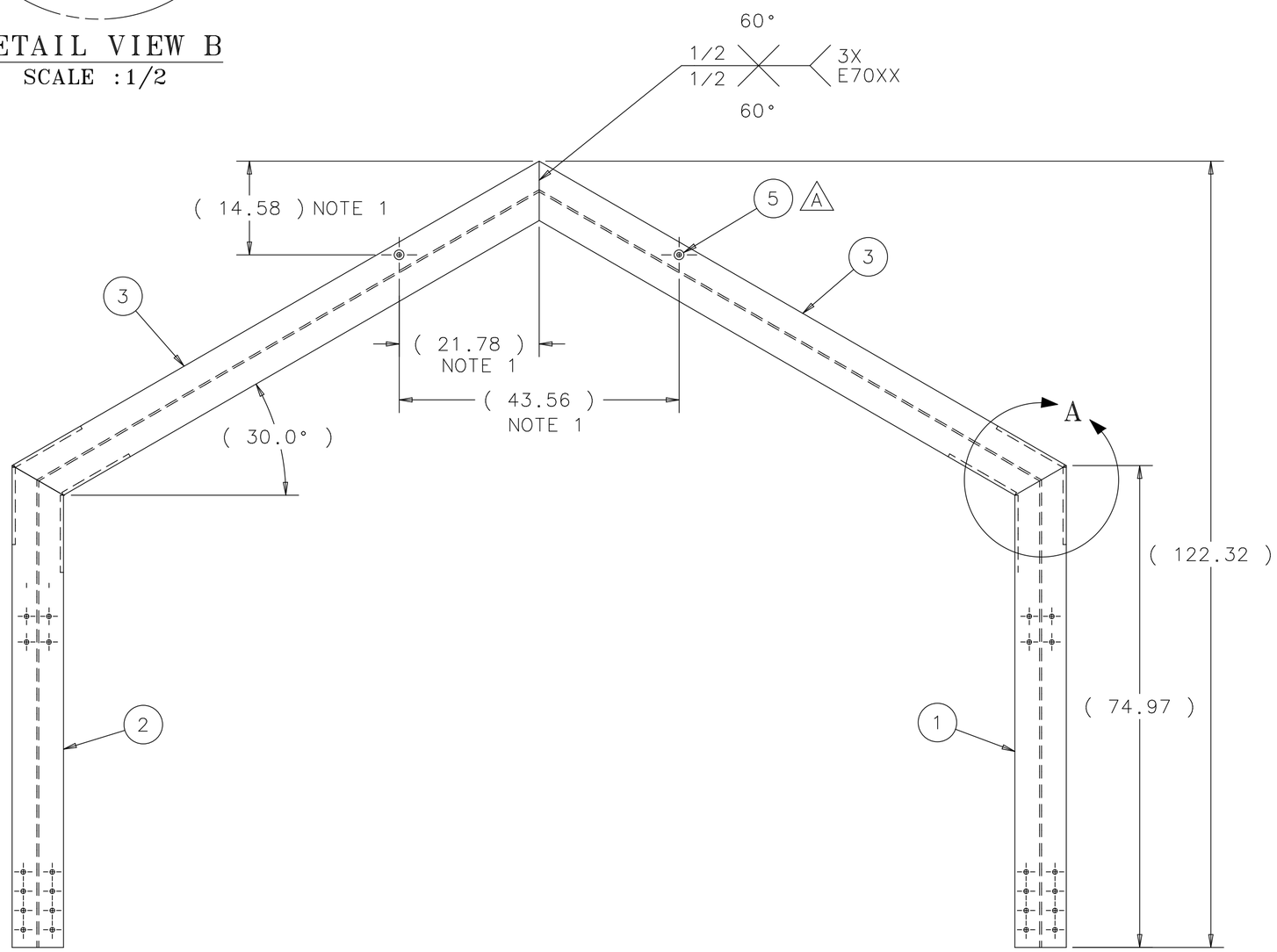

NOTE :
1. FINAL LOCATION OF BOSS AND HOLE TO BE DETERMINED AT ASSEMBLY.

ITEM	PART NO.	DESCRIPTION OR SIZE	QTY.
5	MB-444273	BOSS-TARGET SUPPORT FRAME	2
4	COML	STIFFENER PLATE-ASTM A36 STEEL 12 X 7.13 X .50 THICK	8
3	MC-435687	DIAGONAL BEAM, BOOKEND	2
2	MC-435685	L.H. COLUMN	1
1	MC-435683	R.H. COLUMN	1

PARTS LIST

UNLESS OTHERWISE SPECIFIED					
.XX	.XXX	ANGLES	ORIGINATOR	J.KILMER	05-JAN-2006
± .01	± ---	± ---	DRAWN	W.CYKO	05-JAN-2006
			CHECKED	W.CYKO	08-DEC-2006
			APPROVED	J.KILMER	08-DEC-2006

1. BREAK ALL SHARP EDGES --- MAX.
2. DO NOT SCALE DRAWING.
3. DIMENSIONS BASED UPON ASME Y14.5M-1994
4. MAX. ALL MACH. SURFACES ---
5. DRAWING UNITS: U.S. INCH

USED ON: ME-444204

MATERIAL: SEE PARTS LIST ABOVE

FERMI NATIONAL ACCELERATOR LABORATORY
UNITED STATES DEPARTMENT OF ENERGY

MINERVA-DETECTOR-MECHANICAL PLANE SUPPORT FRAME BOOKEND WELDMENT

SCALE	DRAWING NUMBER	SHEET	REV
1/16& AS NOTED	3938.330-MC-435682	1 OF 1	A

CREATED WITH : Ideas12NXSeries | GROUP: PPD/MECHANICAL DEPARTMENT

Created: 12:43:32 on 21-03-07 (D-M-Y) By: bcyko State: 1-INITIAL

REV	DESCRIPTION	DRAWN	DATE
		APPROVED	DATE

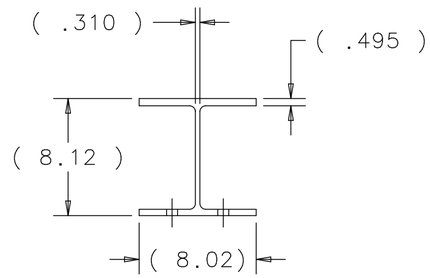

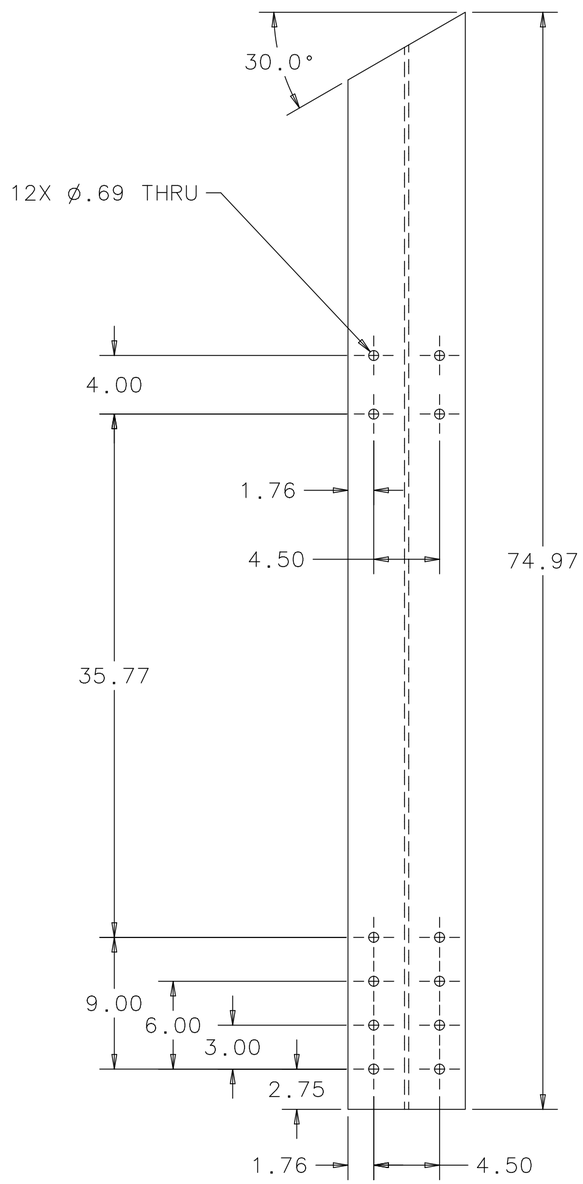

UNLESS OTHERWISE SPECIFIED			ORIGINATOR	J.KILMER	06-JAN-2006
.XX	.XXX	ANGLES	DRAWN	W.CYKO	06-JAN-2006
± .03	± ---	± 1°	CHECKED	W.CYKO	06-DEC-2006
			APPROVED	J.KILMER	06-DEC-2006

1. BREAK ALL SHARP EDGES .015 MAX.
2. DO NOT SCALE DRAWING.
3. DIMENSIONS BASED UPON ASME Y14.5M-1994
4. MAX. ALL MACH. SURFACES 250
5. DRAWING UNITS: INCHES

USED ON: MC-435682

MATERIAL: W BEAM, W8 X 35.0 LB., CARBON STL. ASTM A36

FERMI NATIONAL ACCELERATOR LABORATORY
UNITED STATES DEPARTMENT OF ENERGY

MINERVA-DETECTOR-MECHANICAL PLANE SUPPORT FRAME R.H. COLUMN, BOOKEND

SCALE	DRAWING NUMBER	SHEET	REV
1/8	3938.330-MC-435683	1 OF 1	

CREATED WITH : Ideas12NXSeries | GROUP: PPD/MECHANICAL DEPARTMENT

Created: 13:45:37 on 02-05-07 (D-M-Y) By: kilmer State: 1-INITIAL

REV	DESCRIPTION	DRAWN	DATE
		APPROVED	DATE

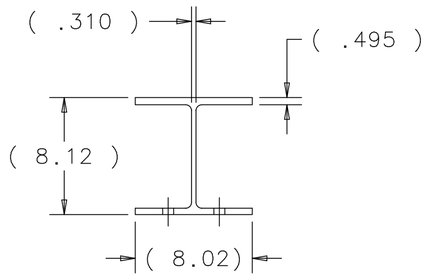

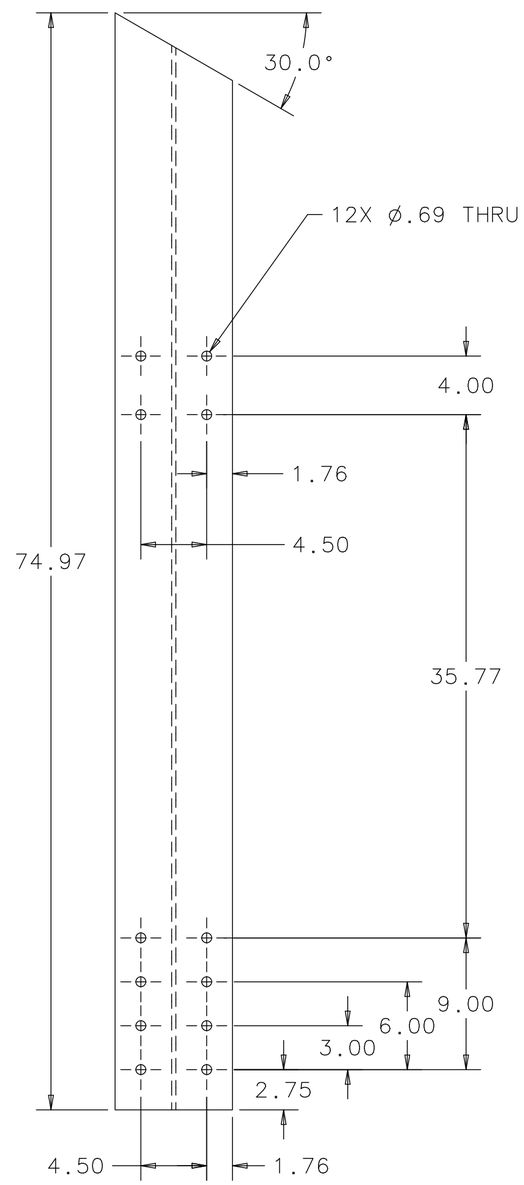

UNLESS OTHERWISE SPECIFIED			ORIGINATOR	J.KILMER	06-JAN-2006
.XX	.XXX	ANGLES	DRAWN	W.CYKO	06-JAN-2006
± .03	± ---	± 1°	CHECKED	W.CYKO	06-DEC-2006
			APPROVED	J.KILMER	06-DEC-2006

1. BREAK ALL SHARP EDGES .015 MAX.
2. DO NOT SCALE DRAWING.
3. DIMENSIONS BASED UPON ASME Y14.5M-1994
4. MAX. ALL MACH. SURFACES 250
5. DRAWING UNITS: INCHES

USED ON: MC-435682

MATERIAL: W BEAM, W8 X 35.0 LB., CARBON STL. ASTM A36

FERMI NATIONAL ACCELERATOR LABORATORY
UNITED STATES DEPARTMENT OF ENERGY

MINERVA-DETECTOR-MECHANICAL PLANE SUPPORT FRAME L.H. COLUMN, BOOKEND

SCALE	DRAWING NUMBER	SHEET	REV
1/8	3938.330-MC-435685	1 OF 1	

CREATED WITH : Ideas12NXSeries | GROUP: PPD/MECHANICAL DEPARTMENT

REV	DESCRIPTION	DRAWN	DATE
		APPROVED	DATE

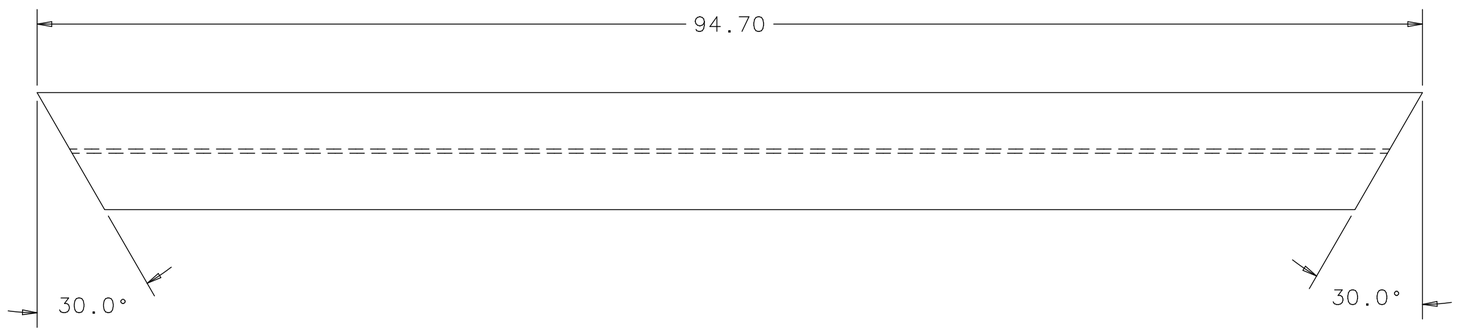

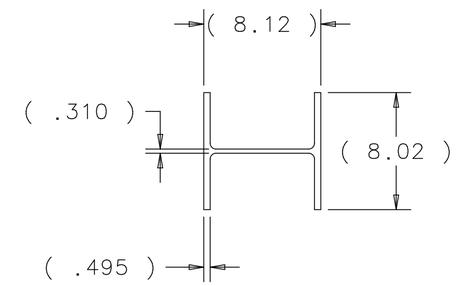

UNLESS OTHERWISE SPECIFIED			ORIGINATOR	J.KILMER	06-JAN-2006
.XX	.XXX	ANGLES	DRAWN	W.CYKO	06-JAN-2006
± .03	± ---	± 1°	CHECKED	J.RAUCH	27-DEC-2006
			APPROVED	J.RAUCH	27-DEC-2006

1. BREAK ALL SHARP EDGES .015 MAX.
2. DO NOT SCALE DRAWING.
3. DIMENSIONS BASED UPON ASME Y14.5M-1994
4. MAX. ALL MACH. SURFACES 250
5. DRAWING UNITS: INCHES

USED ON: MC-435682

MATERIAL: W BEAM, W8 X 35.0 LB., CARBON SL. ASTM A36

FERMI NATIONAL ACCELERATOR LABORATORY
UNITED STATES DEPARTMENT OF ENERGY

MINERVA-DETECTOR-MECHANICAL PLANE SUPPORT FRAME DIAGONAL BEAM, BOOKEND

SCALE	DRAWING NUMBER	SHEET	REV
1/8	3938.330-MC-435687	1 OF 1	

CREATED WITH : Ideas12NXSeries | GROUP: PPD/MECHANICAL DEPARTMENT

Created: 13:47:36 on 02-05-07 (D-M-Y) By: kilmer State: 1-INITIAL

REV	DESCRIPTION	DRAWN	DATE
		APPROVED	DATE

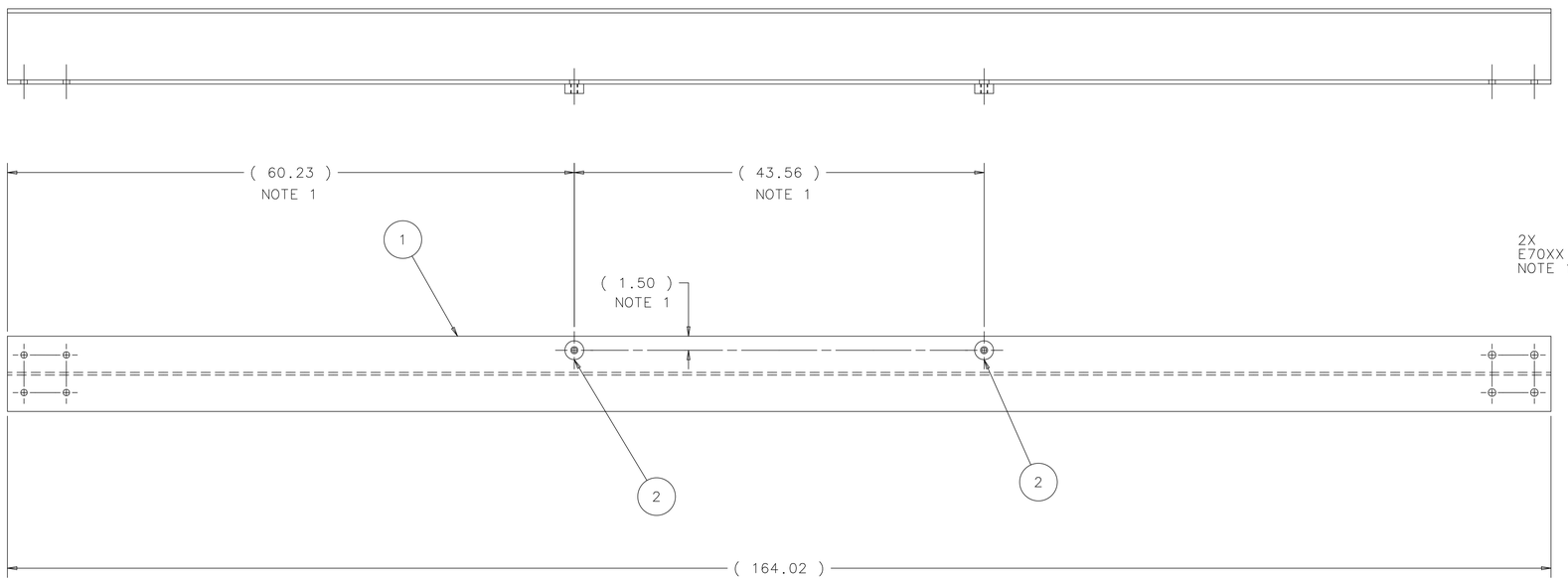

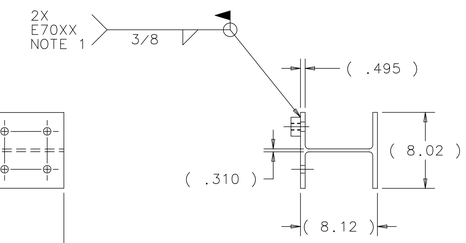

NOTE:
1. FINAL LOCATION OF BOSS TO BE DETERMINED AT ASSEMBLY.

ITEM	PART NO.	DESCRIPTION OR SIZE	QTY.
2	MB-444273	BOSS	2
1	MD-444272	TARGET PLANE SUPPORT	1

PARTS LIST

UNLESS OTHERWISE SPECIFIED					
.XX	.XXX	ANGLES	ORIGINATOR	J.KILMER	06-JAN-2006
± .03	± ---	± ---	DRAWN	W.CYKO	06-JAN-2006
			CHECKED	W.CYKO	08-DEC-2006
			APPROVED	J.KILMER	08-DEC-2006

1. BREAK ALL SHARP EDGES .015 MAX.
2. DO NOT SCALE DRAWING.
3. DIMENSIONS BASED UPON ASME Y14.5M-1994
4. MAX. ALL MACH. SURFACES ---√
5. DRAWING UNITS: U.S. INCH

USED ON: ME-444204

MATERIAL: SEE PARTS LIST ABOVE

FERMI NATIONAL ACCELERATOR LABORATORY
UNITED STATES DEPARTMENT OF ENERGY

MINERVA-DETECTOR-MECHANICAL PLANE SUPPORT FRAME TARGET PLANE SUPPORT WELDMENT

SCALE	DRAWING NUMBER	SHEET	REV
1/8	3938.330-MD-435689	1 OF 1	

CREATED WITH : Ideas12NXSeries GROUP: PPD/MECHANICAL DEPARTMENT

Created: 13:18:38 on 02-05-07 (D-M-Y) By: kilmer State: 1-INITIAL

REV	DESCRIPTION	DRAWN	DATE
		APPROVED	DATE

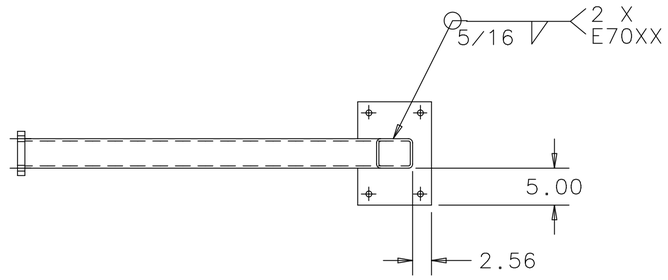

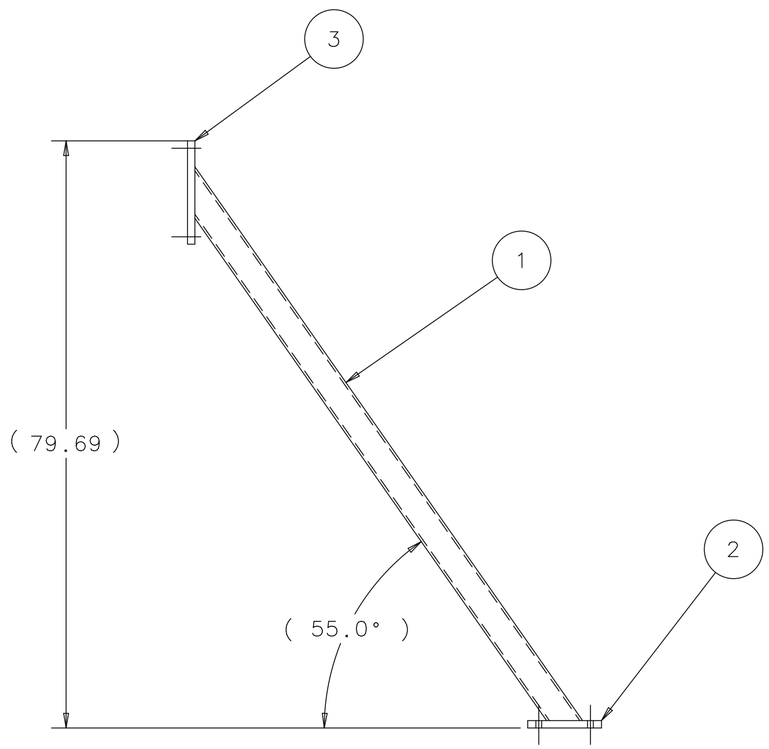

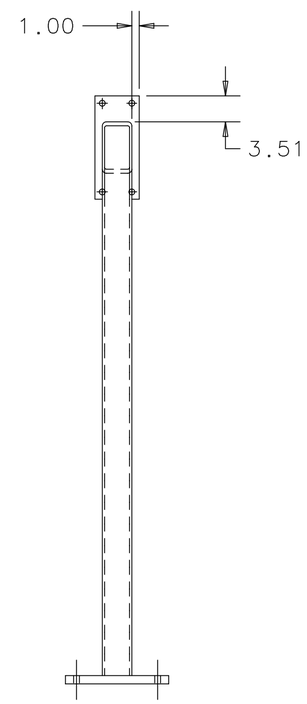

3	MB-444227	DIAGONAL STIFFENER COLUMN PLATE	1
2	MB-444225	DIAGONAL STIFFENER BASE PLATE	1
1	MB-444226	DIAGONAL STIFFENER TUBE	1

UNLESS OTHERWISE SPECIFIED					
.XX	.XXX	ANGLES	ORIGINATOR	W.CYKO	23-OCT-2006
± .03	± ---	± 1°	DRAWN	S.KINDELBERGER	23-OCT-2006
			CHECKED	W.CYKO	27-DEC-2006
			APPROVED	W.CYKO	27-DEC-2006

1. BREAK ALL SHARP EDGES .015 MAX.
2. DO NOT SCALE DRAWING.
3. DIMENSIONS BASED UPON ASME Y14.5M-1994
4. MAX. ALL MACH. SURFACES 250
5. DRAWING UNITS: U.S. INCH

USED ON: ME-444204 & ME-444345

MATERIAL: SEE PARTS LIST ABOVE

FERMI NATIONAL ACCELERATOR LABORATORY
UNITED STATES DEPARTMENT OF ENERGY

MINERVA-DETECTOR-MECHANICAL PLANE SUPPORT RAME DIAGONAL STIFFENER WELDMENT

SCALE	DRAWING NUMBER	SHEET	REV
1/16	3938.300-MC-444164	1 OF 1	

CREATED WITH : Ideas12NXSeries | GROUP: PPD/MECHANICAL DEPARTMENT

Created: 12:52:16 on 21-03-07 (D-M-Y) By: bcyko State: 1-INITIAL

REV	DESCRIPTION	DRAWN	DATE
		APPROVED	DATE

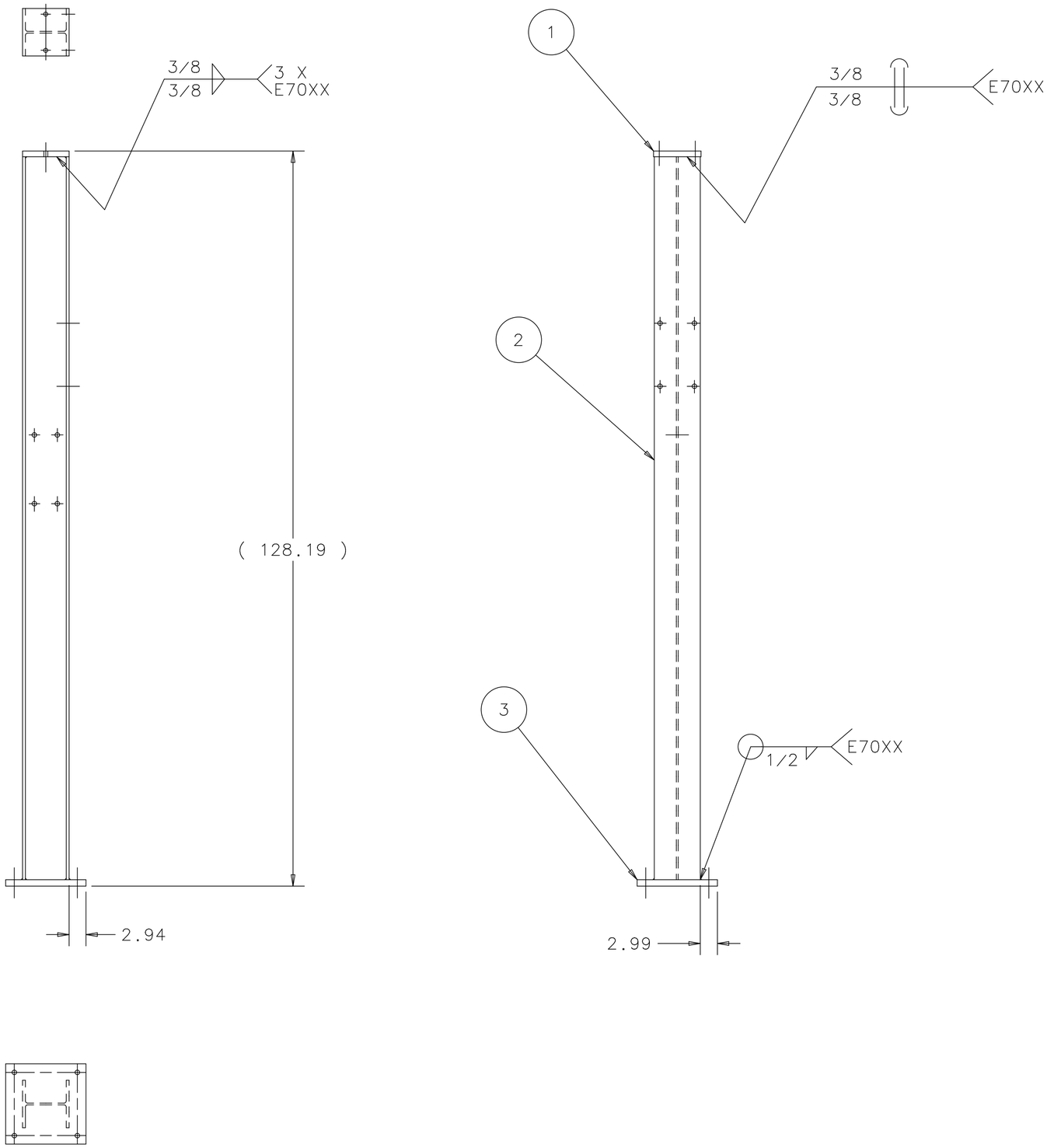

3	MB-444238	SUPPORT COLUMN BASE PLATE	1
2	MC-444249	END SUPPORT COLUMN	1
1	MB-444237	SUPPORT COLUMN TOP PLATE END	1

UNLESS OTHERWISE SPECIFIED			ORIGINATOR	W.CYKO	30-OCT-2006
.XX	.XXX	ANGLES	DRAWN	S.KINDELBERGER	30-OCT-2006
± .01	± ---	± ---	CHECKED	W.CYKO	27-DEC-2006
			APPROVED	W.CYKO	27-DEC-2006

1. BREAK ALL SHARP EDGES .015 MAX.
2. DO NOT SCALE DRAWING.
3. DIMENSIONS BASED UPON ASME Y14.5M-1994
4. MAX. ALL MACH. SURFACES ---
5. DRAWING UNITS: U.S. INCH

USED ON: ME-444204 & ME-444345

MATERIAL: SEE PARTS LIST ABOVE

FERMI NATIONAL ACCELERATOR LABORATORY
UNITED STATES DEPARTMENT OF ENERGY

MINERVA-DETECTOR-MECHANICAL SUPPORT FRAME PLANE END COLUMN WELDMENT

SCALE	DRAWING NUMBER	SHEET	REV
1/16	3938.300-MC-444185	1 OF 1	

CREATED WITH : Ideas12NXSeries GROUP: PPD/MECHANICAL DEPARTMENT

Created: 12:51:11 on 21-03-07 (D-M-Y) By: bcyko State: 1-INITIAL

REV	DESCRIPTION	DRAWN	DATE
		APPROVED	DATE

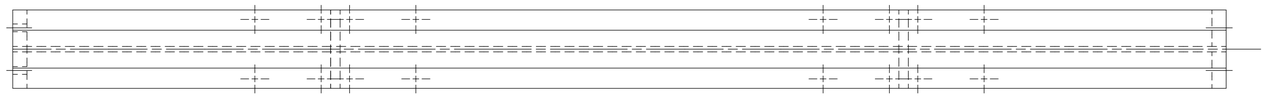

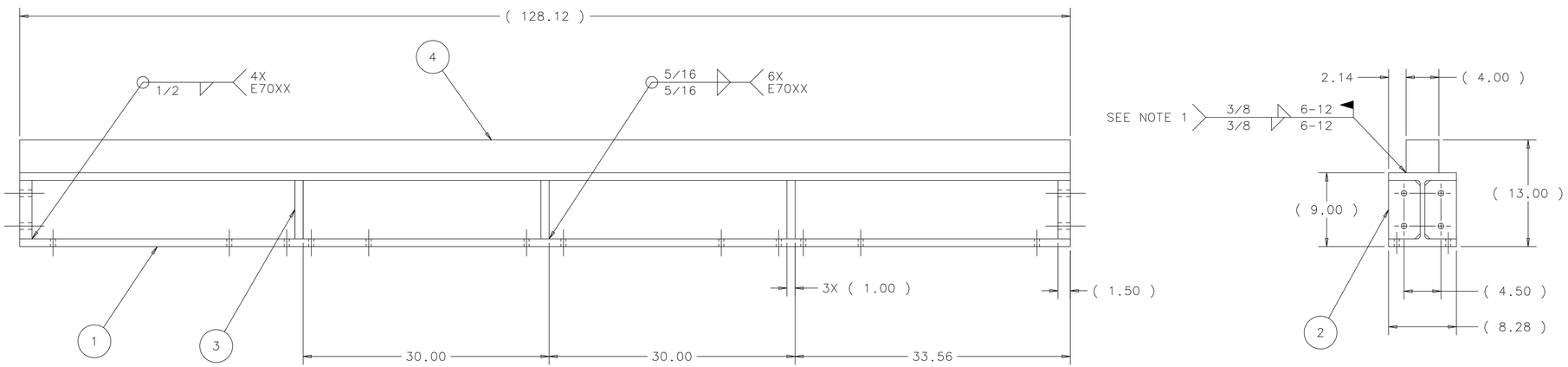

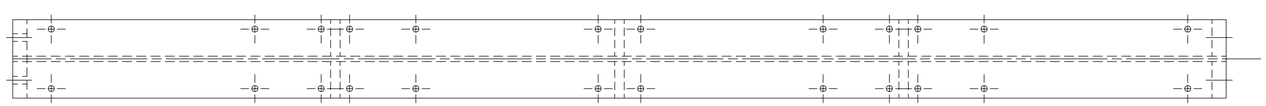

ITEM	PART NO.	DESCRIPTION OR SIZE	QTY.
4	COML	BAR,SQUARE,4 X 4 X 128.12 LG. CARBON STEEL ASTM A36	1
3	MB-444208	BEAM FLANGE PLATE	6
2	MB-444207	BEAM BOOKEND MOUNTING PLATE	4
1	MD-444206	SUPPORT BEAM	1

PARTS LIST

UNLESS OTHERWISE SPECIFIED			ORIGINATOR	J.KILMER	06-NOV-2006
.XX	.XXX	ANGLES	DRAWN	G.SMITH	06-NOV-2006
± .06	± ----	± ---	CHECKED	W.CYKO	06-DEC-2006
			APPROVED	J.KILMER	06-DEC-2006

1. BREAK ALL SHARP EDGES .015 MAX.
2. DO NOT SCALE DRAWING.
3. DIMENSIONS BASED UPON ASME Y14.5M-1994
4. MAX. ALL MACH. SURFACES 250
5. DRAWING UNITS: U.S. INCH

USED ON: ME-444204

MATERIAL: SEE PARTS LIST ABOVE

FERMI NATIONAL ACCELERATOR LABORATORY
UNITED STATES DEPARTMENT OF ENERGY

MINERVA-DETECTOR-MECHANICAL
PLANE SUPPORT FRAME
SUPPORT BEAM WELDMENT

SCALE	DRAWING NUMBER	SHEET	REV
1:8	3938.300-MD-444205	1 OF 1	

CREATED WITH : Ideas12NXSeries GROUP: PPD/MECHANICAL DEPARTMENT

NOTE :
1. ITEM 4 TO BE SHIPPED SEPERATE (NOT WELDED). TO BE WELDED AT FERMILAB.

REV	DESCRIPTION	DRAWN	DATE
		APPROVED	DATE

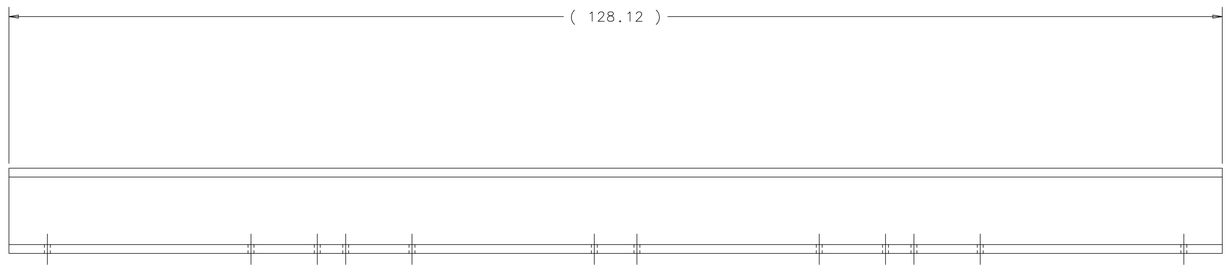

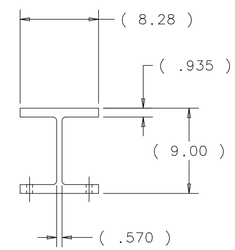

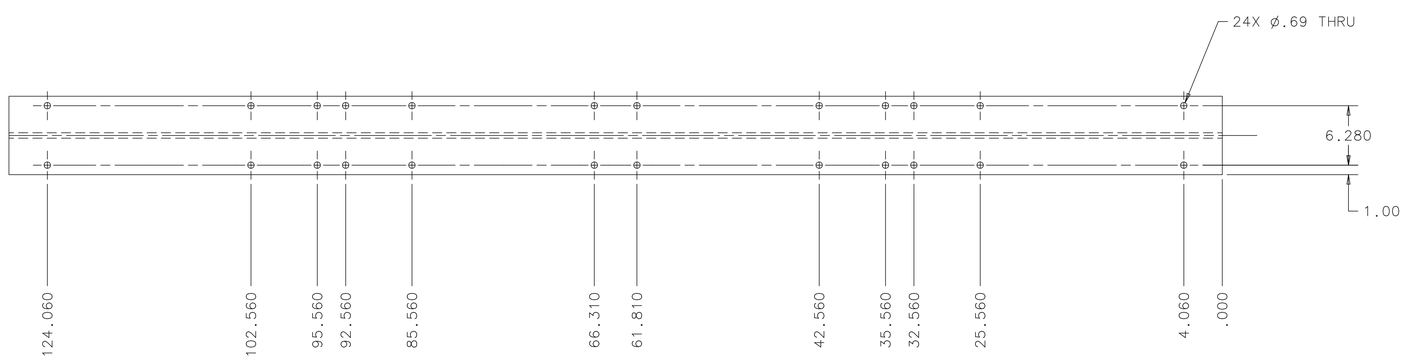

UNLESS OTHERWISE SPECIFIED			ORIGINATOR	J.KILMER	06-NOV-2006
.XX	.XXX	ANGLES	DRAWN	G.SMITH	06-NOV-2006
± .06	± .015	± ---	CHECKED	W.CYKO	06-DEC-2006
			APPROVED	J.KILMER	06-DEC-2006

1. BREAK ALL SHARP EDGES .015 MAX.
2. DO NOT SCALE DRAWING.
3. DIMENSIONS BASED UPON ASME Y14.5M-1994
4. MAX. ALL MACH. SURFACES 250
5. DRAWING UNITS: U.S. INCH

USED ON: MD-444205

MATERIAL: W-BEAM, W8 X 67.0 X 128.12 LG. CARBON STEEL-ASTM A36

FERMI NATIONAL ACCELERATOR LABORATORY
UNITED STATES DEPARTMENT OF ENERGY

MINERVA-DETECTOR-MECHANICAL PLANE SUPPORT FRAME SUPPORT BEAM

SCALE	DRAWING NUMBER	SHEET	REV
1:8	3938.300-MD-444206	1 OF 1	

CREATED WITH : Ideas12NXSeries | GROUP: PPD/MECHANICAL DEPARTMENT

REV	DESCRIPTION	DRAWN	DATE
		APPROVED	DATE

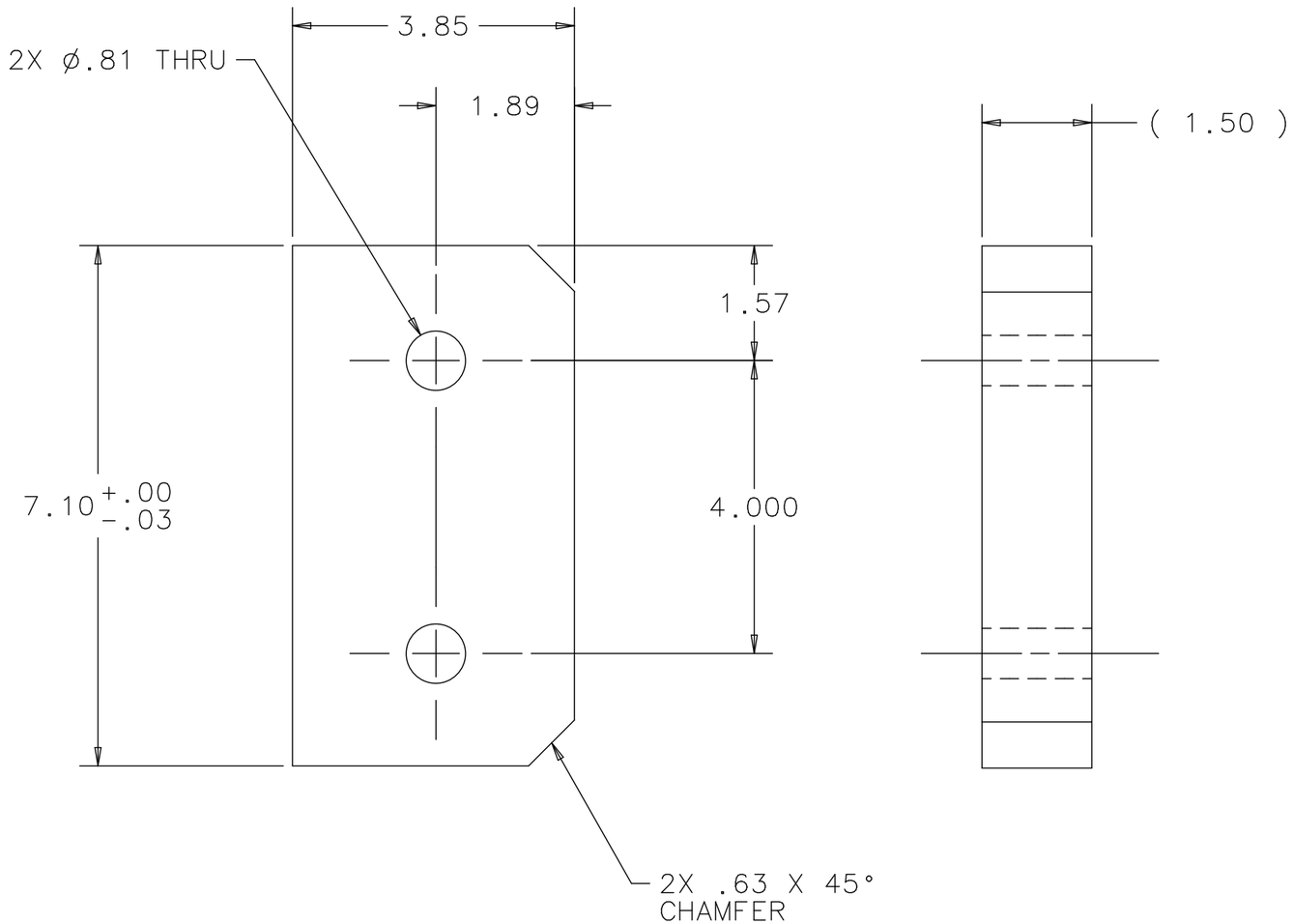

UNLESS OTHERWISE SPECIFIED			ORIGINATOR	J.KILMER	06-NOV-2006
.XX	.XXX	ANGLES	DRAWN	G.SMITH	06-NOV-2006
± .03	± .015	± 2°	CHECKED	W.CYKO	06-DEC-2006
			APPROVED	J.KILMER	06-DEC-2006

1. BREAK ALL SHARP EDGES .015 MAX.
2. DO NOT SCALE DRAWING.
3. DIMENSIONS BASED UPON ASME Y14.5M-1994
4. MAX. ALL MACH. SURFACES 250
5. DRAWING UNITS: U.S. INCH

USED ON: MD-444205

MATERIAL: ASTM-A36 STEEL

FERMI NATIONAL ACCELERATOR LABORATORY
UNITED STATES DEPARTMENT OF ENERGY

MINERVA-DETECTOR-MECHANICAL PLANE SUPPORT FRAME BOOKEND MOUNTING PLATE

SCALE	DRAWING NUMBER	SHEET	REV
1:2 1:2	3938.300-MB-444207	1 OF 1	

CREATED WITH : Ideas12NXSeries | GROUP: PPD/MECHANICAL DEPARTMENT

Created: 13:29:04 on 02-05-07 (D-M-Y) By: kilmer State: 1-INITIAL

REV	DESCRIPTION	DRAWN	DATE
		APPROVED	DATE

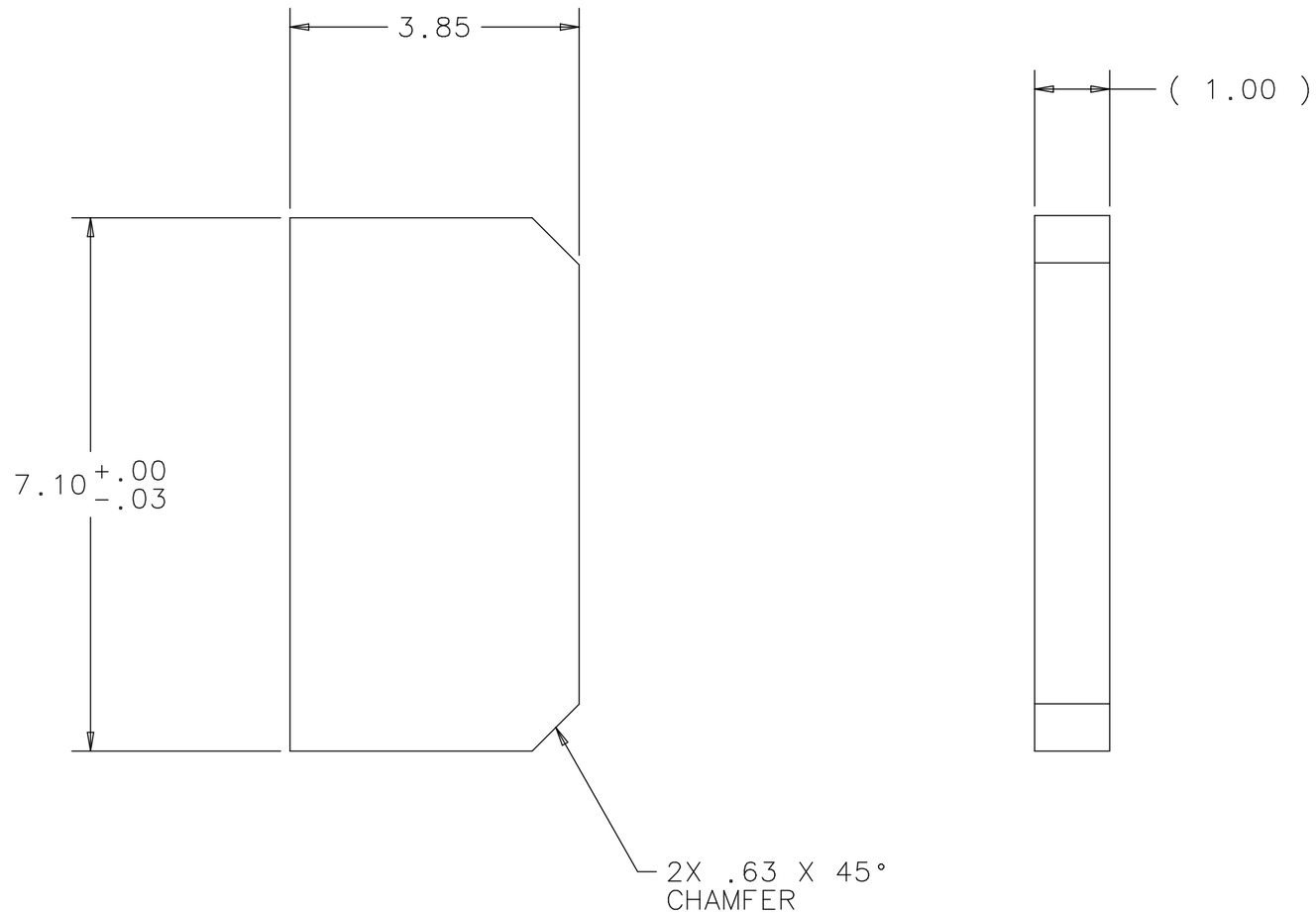

UNLESS OTHERWISE SPECIFIED			ORIGINATOR	J.KILMER	06-NOV-2006
.XX	.XXX	ANGLES	DRAWN	G.SMITH	06-NOV-2006
± .03	± ---	± 2°	CHECKED	W.CYKO	06-DEC-2006
			APPROVED	J.KILMER	06-DEC-2006

1. BREAK ALL SHARP EDGES .015 MAX.
2. DO NOT SCALE DRAWING.
3. DIMENSIONS BASED UPON ASME Y14.5M-1994
4. MAX. ALL MACH. SURFACES 250
5. DRAWING UNITS: U.S. INCH

USED ON: MD-444205

MATERIAL: ASTM-A36 STEEL

FERMI NATIONAL ACCELERATOR LABORATORY
UNITED STATES DEPARTMENT OF ENERGY

MINERVA-DETECTOR-MECHANICAL PLANE SUPPORT FRAME FLANGE PLATE

SCALE	DRAWING NUMBER	SHEET	REV
1:2	3938.300-MB-444208	1 OF 1	

CREATED WITH : Ideas12NXSeries | GROUP: PPD/MECHANICAL DEPARTMENT

Created: 13:30:38 on 02-05-07 (D-M-Y) By: kilmer State: 1-INITIAL

REV	DESCRIPTION	DRAWN	DATE
		APPROVED	DATE

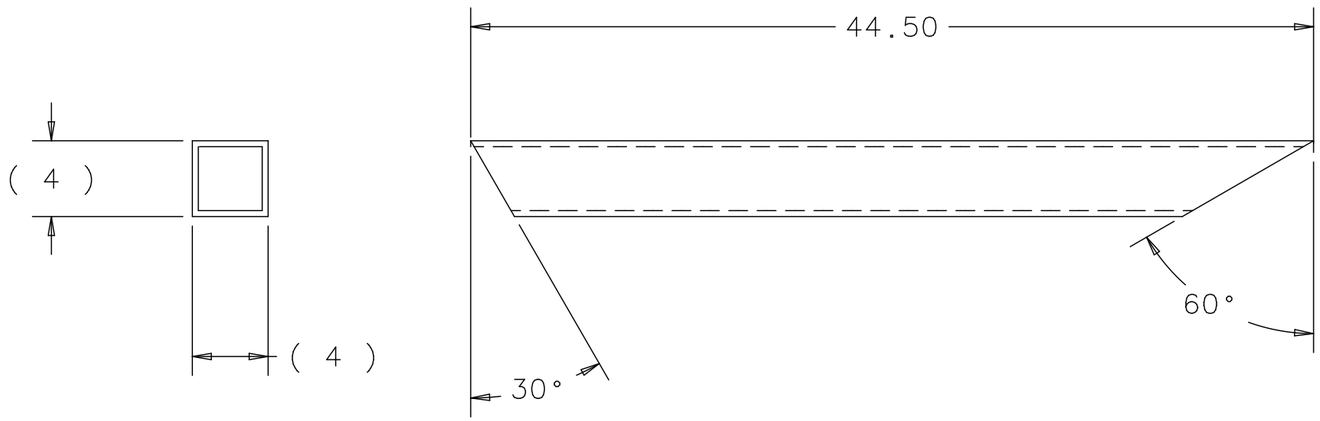

UNLESS OTHERWISE SPECIFIED			ORIGINATOR	W.CYKO	07-NOV-2006
.XX	.XXXX	ANGLES	DRAWN	S.KINDELBERGER	07-NOV-2006
± .03	± ---	± 1°	CHECKED	W.CYKO	27-DEC-2006
			APPROVED	W.CYKO	27-DEC-2006

1. BREAK ALL SHARP EDGES .015 MAX.
2. DO NOT SCALE DRAWING.
3. DIMENSIONS BASED UPON ASME Y14.5M-1994
4. MAX. ALL MACH. SURFACES 250
5. DRAWING UNITS: U.S. INCH

USED ON
MC-444222

MATERIAL
SQUARE STRUCTURAL TUBING 4 x 4 x 5/16
CARBON STEEL A500 GR. B

FERMI NATIONAL ACCELERATOR LABORATORY
UNITED STATES DEPARTMENT OF ENERGY

MINERVA-DETECTOR-MECHANICAL PLANE SUPPORT FRAME DIAGONAL SUPPORT TUBE

SCALE	DRAWING NUMBER	SHEET	REV
1:8	3938.300-MB-444219	1 OF 1	

CREATED WITH : Ideas12NXSeries | GROUP: PPD/MECHANICAL DEPARTMENT

Created: 14:58:55 on 02-05-07 (D-M-Y) By: kilmer State: 1-INITIAL

REV	DESCRIPTION	DRAWN	DATE
		APPROVED	DATE

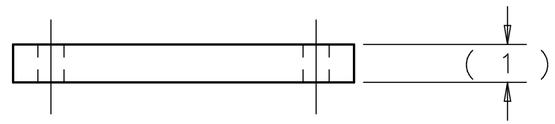

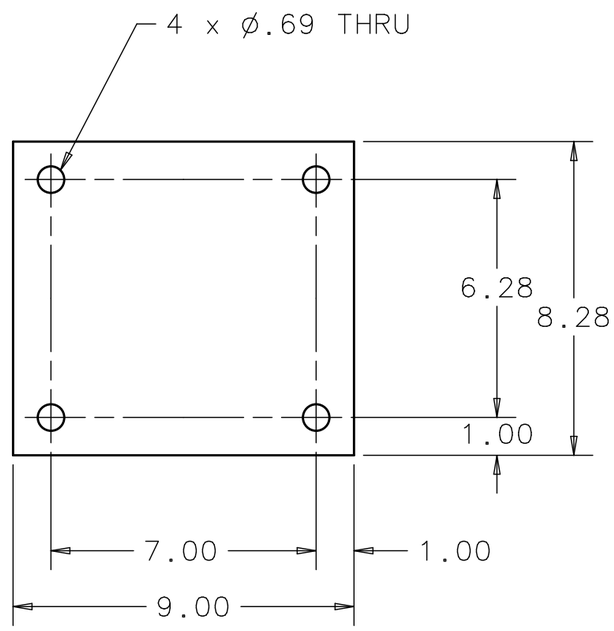

UNLESS OTHERWISE SPECIFIED			ORIGINATOR	W.CYKO	07-NOV-2006
.XX	.XXX	ANGLES	DRAWN	S.KINDELBERGER	07-NOV-2006
± .01	± ---	± ---	CHECKED	W.CYKO	27-DEC-2006
			APPROVED	W.CYKO	27-DEC-2006

1. BREAK ALL SHARP EDGES .015 MAX.
2. DO NOT SCALE DRAWING.
3. DIMENSIONS BASED UPON ASME Y14.5M-1994
4. MAX. ALL MACH. SURFACES 250
5. DRAWING UNITS: U.S. INCH

USED ON: MC-444222

MATERIAL: PLATE 1" THK. CARBON STEEL A36

FERMI NATIONAL ACCELERATOR LABORATORY
UNITED STATES DEPARTMENT OF ENERGY

MINERVA-DETECTOR-MECHANICAL PLANE SUPPORT FRAME DIAGONAL SUPPORT BEAM PLATE

SCALE	DRAWING NUMBER	SHEET	REV
1:4	3938.300-MB-444220	1 OF 1	

CREATED WITH : Ideas12NXSeries | GROUP: PPD/MECHANICAL DEPARTMENT

Created: 15:00:01 on 02-05-07 (D-M-Y) By: kilmer State: 1-INITIAL

REV	DESCRIPTION	DRAWN	DATE
		APPROVED	DATE

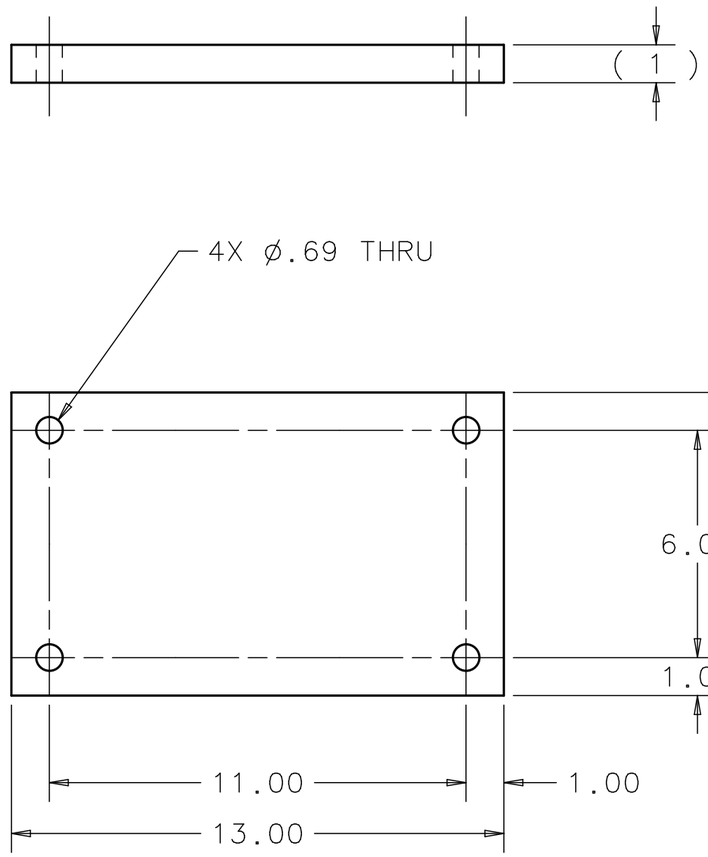

UNLESS OTHERWISE SPECIFIED			ORIGINATOR	W.CYKO	07-NOV-2006
.XX	.XXX	ANGLES	DRAWN	S.KINDELBERGER	07-NOV-2006
± .01	± ---	± ---	CHECKED	W.CYKO	27-DEC-2006
			APPROVED	W.CYKO	27-DEC-2006

1. BREAK ALL SHARP EDGES .015 MAX.
2. DO NOT SCALE DRAWING.
3. DIMENSIONS BASED UPON ASME Y14.5M-1994
4. MAX. ALL MACH. SURFACES 250
5. DRAWING UNITS: U.S. INCH

USED ON: MC-444222

MATERIAL: PLATE 1" THK. CARBON STEEL A36

FERMI NATIONAL ACCELERATOR LABORATORY
UNITED STATES DEPARTMENT OF ENERGY

MINERVA-DETECTOR-MECHANICAL PLANE SUPPORT FRAME DIAGONAL SUPPORT COLUMN PLATE

SCALE	DRAWING NUMBER	SHEET	REV
1:4	3938.300-MB-444221	1 OF 1	

CREATED WITH : Ideas12NXSeries | GROUP: PPD/MECHANICAL DEPARTMENT

Created: 15:01:03 on 02-05-07 (D-M-Y) By: kilmer State: 1-INITIAL

REV	DESCRIPTION	DRAWN	DATE
		APPROVED	DATE

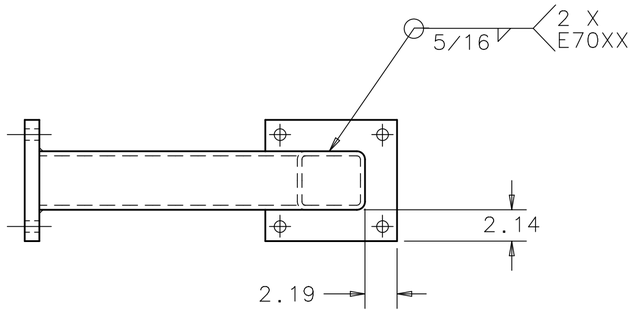

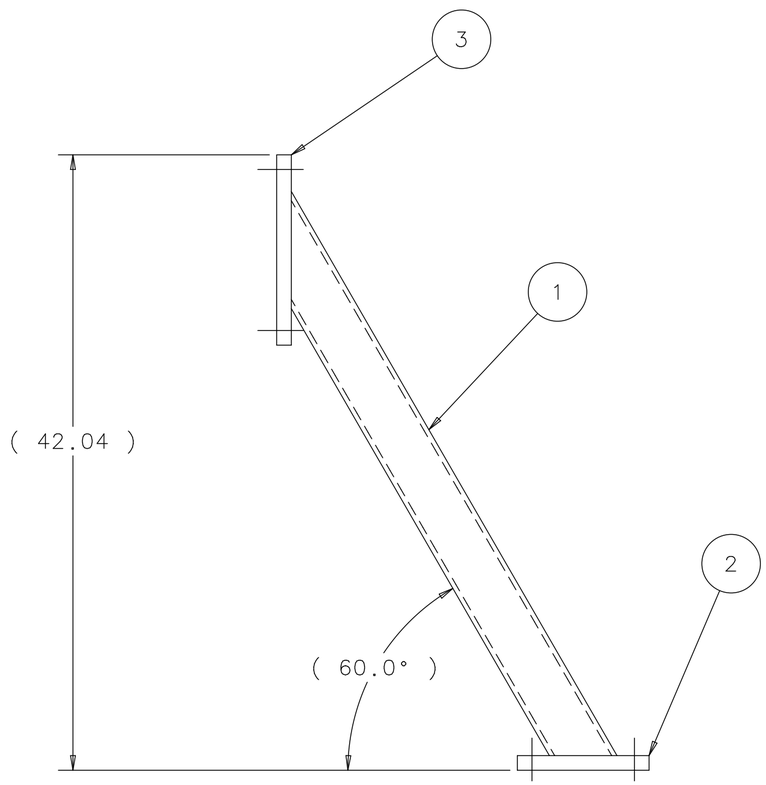

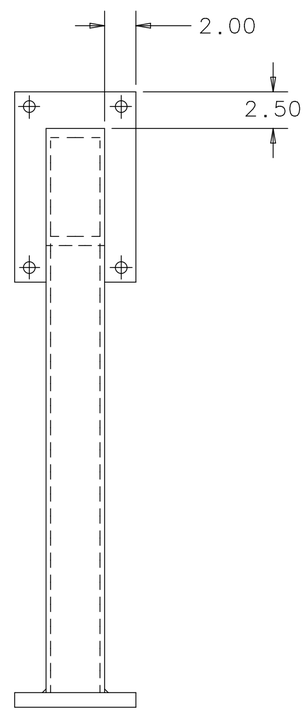

3	MB-444221	DIAGONAL SUPPORT COLUMN PLATE	1
2	MB-444220	DIAGONAL SUPPORT BEAM PLATE	1
1	MB-444219	DIAGONAL SUPPORT TUBE	1

UNLESS OTHERWISE SPECIFIED			ORIGINATOR	W.CYKO	19-OCT-2006
.XX	.XXX	ANGLES	DRAWN	S.KINDELBERGER	19-OCT-2006
± .03	± ---	± 1°	CHECKED	W.CYKO	27-DEC-2006
			APPROVED	W.CYKO	27-DEC-2006

1. BREAK ALL SHARP EDGES .015 MAX.
2. DO NOT SCALE DRAWING.
3. DIMENSIONS BASED UPON ASME Y14.5M-1994
4. MAX. ALL MACH. SURFACES 250
5. DRAWING UNITS: U.S. INCH

USED ON: ME-444204 & ME-444345

MATERIAL: SEE PARTS LIST ABOVE

FERMI NATIONAL ACCELERATOR LABORATORY
UNITED STATES DEPARTMENT OF ENERGY

MINERVA-DETECTOR-MECHANICAL PLANE SUPPORT FRAME DIAGONAL SUPPORT WELDMENT

SCALE	DRAWING NUMBER	SHEET	REV
1:8	3938.300-MC-444222	1 OF 1	

CREATED WITH : Ideas12NXSeries | GROUP: PPD/MECHANICAL DEPARTMENT

REV	DESCRIPTION	DRAWN	DATE
		APPROVED	DATE

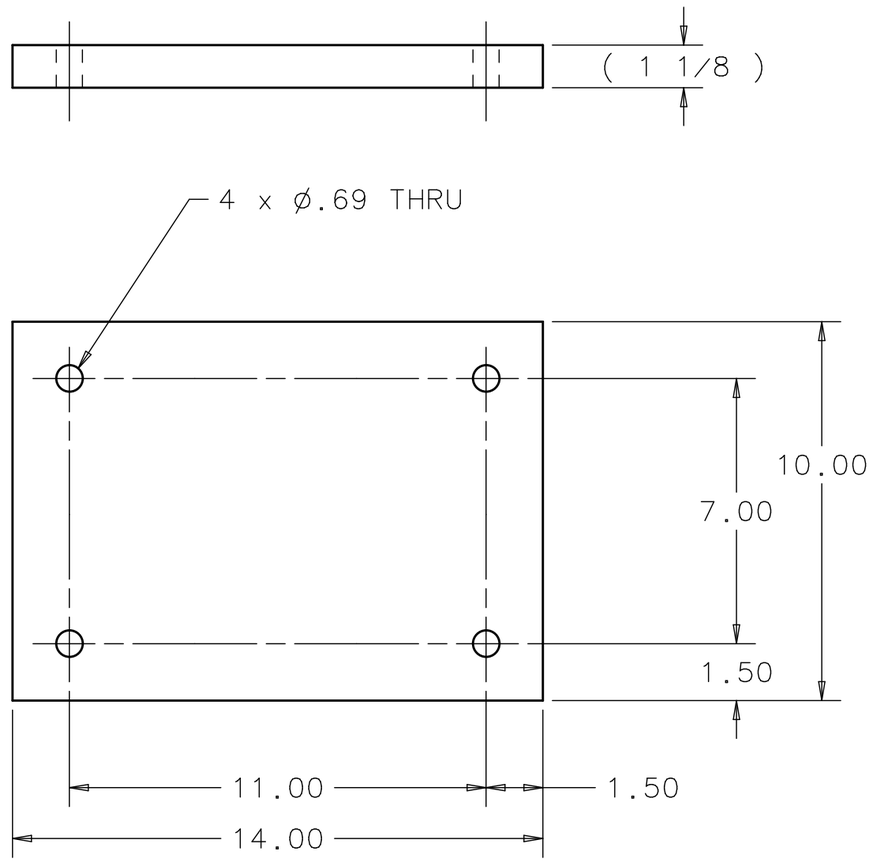

UNLESS OTHERWISE SPECIFIED			ORIGINATOR	W.CYKO	08-NOV-2006
.XX	.XXX	ANGLES	DRAWN	S.KINDELBERGER	07-NOV-2006
± .01	± ---	± ---	CHECKED	W.CYKO	27-DEC-2006
			APPROVED	W.CYKO	27-DEC-2006

1. BREAK ALL SHARP EDGES .015 MAX.
2. DO NOT SCALE DRAWING.
3. DIMENSIONS BASED UPON ASME Y14.5M-1994
4. MAX. ALL MACH. SURFACES 250
5. DRAWING UNITS: U.S. INCH

USED ON: MC-444164

MATERIAL: PLATE 1 /8" THK. CARBON STEEL A36

FERMI NATIONAL ACCELERATOR LABORATORY
UNITED STATES DEPARTMENT OF ENERGY

MINERVA-DETECTOR-MECHANICAL PLANE SUPPORT FRAME DIAGONAL STIFFENER BASE PLATE

SCALE	DRAWING NUMBER	SHEET	REV
1:4	3938.300-MB-444225	1 OF 1	

CREATED WITH : Ideas12NXSeries | GROUP: PPD/MECHANICAL DEPARTMENT

Created: 13:56:52 on 02-05-07 (D-M-Y) By: kilmer State: 1-INITIAL

REV	DESCRIPTION	DRAWN	DATE
		APPROVED	DATE

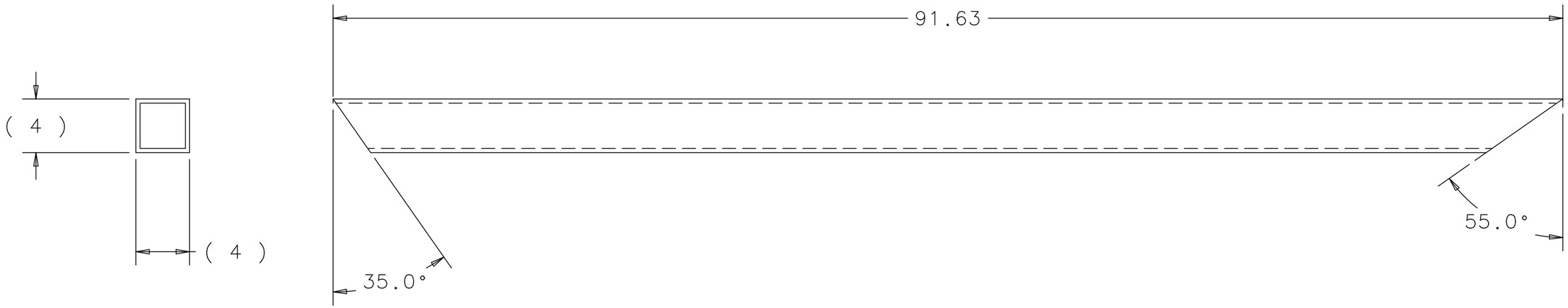

UNLESS OTHERWISE SPECIFIED			ORIGINATOR	W.CYKO	08-NOV-2006
.XX	.XXX	ANGLES	DRAWN	S.KINDELBERGER	08-NOV-2006
± .03	± ---	± 1°	CHECKED	W.CYKO	27-DEC-2006
			APPROVED	W.CYKO	27-DEC-2006

1. BREAK ALL SHARP EDGES .015 MAX.
2. DO NOT SCALE DRAWING.
3. DIMENSIONS BASED UPON ASME Y14.5M-1994
4. MAX. ALL MACH. SURFACES 250
5. DRAWING UNITS: U.S. INCH

USED ON: MC-444164

MATERIAL: SQUARE STRUCTURAL TUBING 4 x 4 x 5/16 CARBON STEEL A500 GR. B

FERMI NATIONAL ACCELERATOR LABORATORY
UNITED STATES DEPARTMENT OF ENERGY

MINERVA-DETECTOR-MECHCANICAL PLANE SUPPORT FRAME DIAGONAL STIFFENER TUBE

SCALE	DRAWING NUMBER	SHEET	REV
1:8	3938.300-MB-444226	1 OF 1	

CREATED WITH : Ideas12NXSeries | GROUP: PPD/MECHANICAL DEPARTMENT

Created: 13:57:55 on 02-05-07 (D-M-Y) By: kilmer State: 1-INITIAL

REV	DESCRIPTION	DRAWN	DATE
		APPROVED	DATE

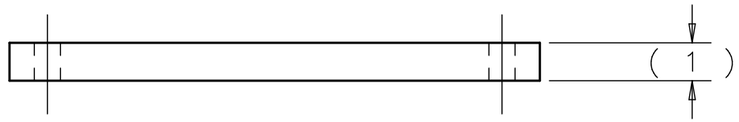

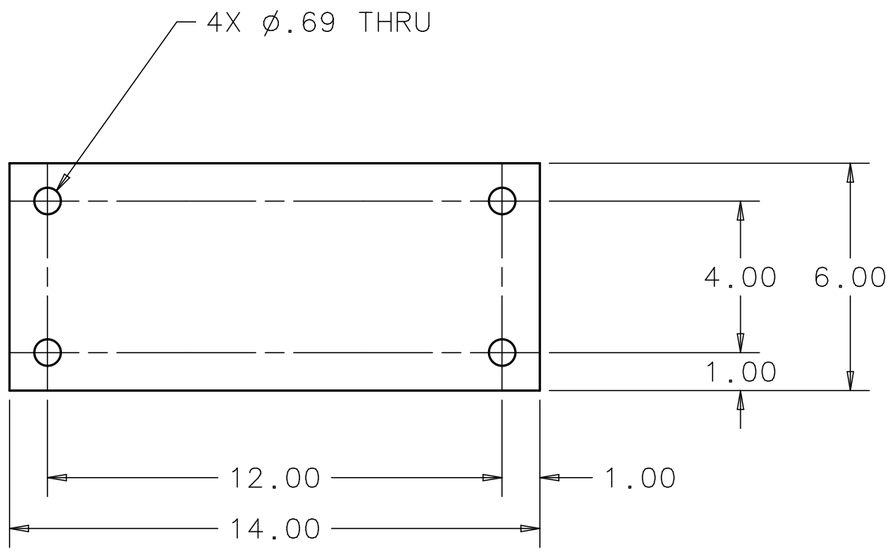

UNLESS OTHERWISE SPECIFIED			ORIGINATOR	W.CYKO	08-NOV-2006
.XX	.XXX	ANGLES	DRAWN	S.KINDELBERGER	07-NOV-2006
± .01	± ---	± ---	CHECKED	W.CYKO	27-DEC-2006
			APPROVED	W.CYKO	27-DEC-2006

1. BREAK ALL SHARP EDGES .015 MAX.
2. DO NOT SCALE DRAWING.
3. DIMENSIONS BASED UPON ASME Y14.5M-1994
4. MAX. ALL MACH. SURFACES 250
5. DRAWING UNITS: U.S. INCH

USED ON: MC-444164

MATERIAL: PLATE 1" THK. CARBON STEEL A36

FERMI NATIONAL ACCELERATOR LABORATORY
UNITED STATES DEPARTMENT OF ENERGY

MINERVA-DETECTOR-MECHANICAL PLANE SUPPORT FRAME DIAGONAL STIFFENER COLUMN PLATE

SCALE	DRAWING NUMBER	SHEET	REV
1:4	3938.300-MB-444227	1 OF 1	

CREATED WITH : Ideas12NXSeries | GROUP: PPD/MECHANICAL DEPARTMENT

Created: 13:58:52 on 02-05-07 (D-M-Y) By: kilmer State: 1-INITIAL

REV	DESCRIPTION	DRAWN	DATE
		APPROVED	DATE

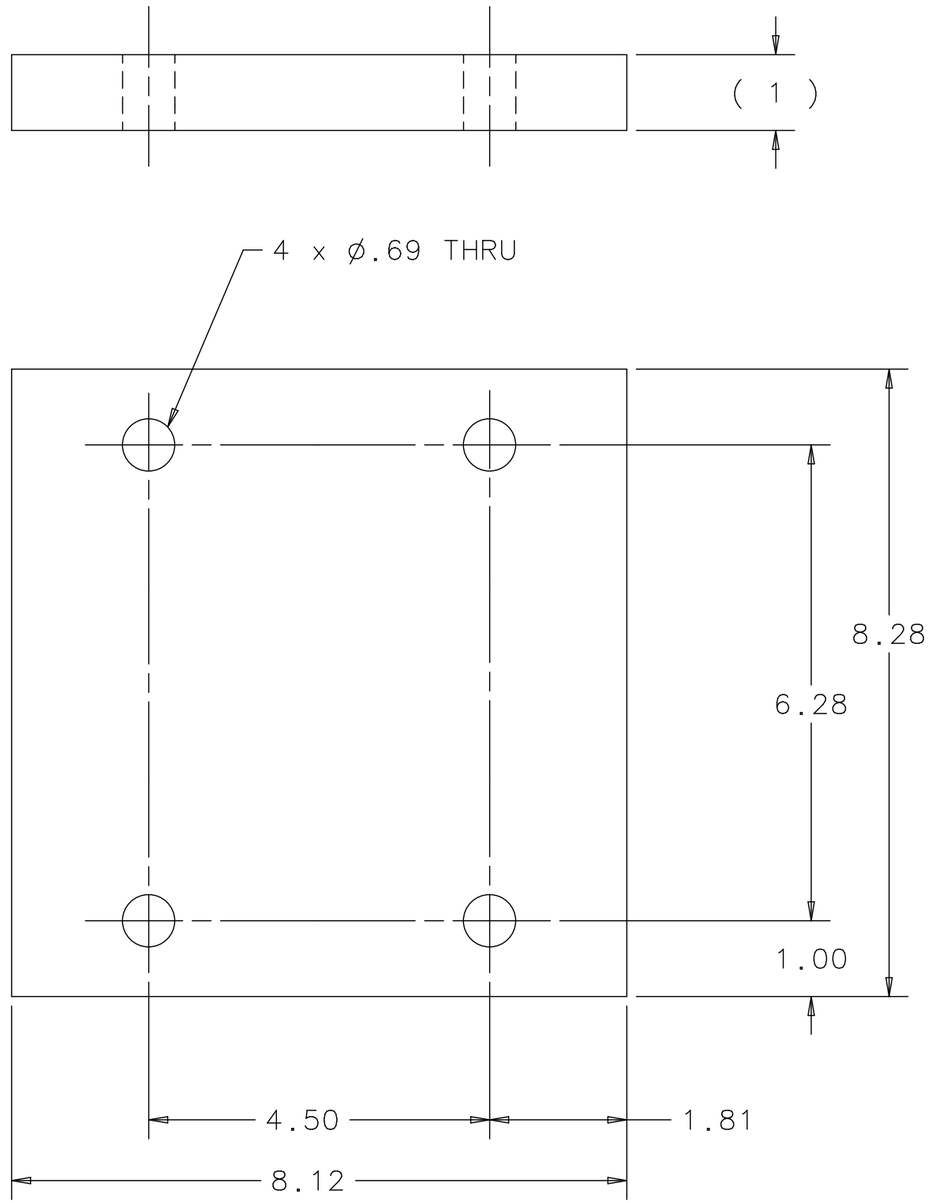

UNLESS OTHERWISE SPECIFIED			ORIGINATOR	W.CYKO	13-NOV-2006
.XX	.XXX	ANGLES	DRAWN	S.KINDELBERGER	13-NOV-2006
± .01	± ---	± ---	CHECKED	W.CYKO	27-DEC-2006
			APPROVED	W.CYKO	27-DEC-2006

1. BREAK ALL SHARP EDGES .015 MAX.
2. DO NOT SCALE DRAWING.
3. DIMENSIONS BASED UPON ASME Y14.5M-1994
4. MAX. ALL MACH. SURFACES 250
5. DRAWING UNITS: U.S. INCH

USED ON: MC-444276

MATERIAL: PLATE, 1" THK. CARBON STEEL A36

FERMI NATIONAL ACCELERATOR LABORATORY
UNITED STATES DEPARTMENT OF ENERGY

MINERVA-DETECTOR-MECHANICAL PLANE SUPPORT FRAME SUPPORT COLUMN TOP PLATE

SCALE	DRAWING NUMBER	SHEET	REV
1:2	3938.300-MB-444236	1 OF 1	

CREATED WITH : Ideas12NXSeries | GROUP: PPD/MECHANICAL DEPARTMENT

Created: 15:07:34 on 02-05-07 (D-M-Y) By: kilmer State: 1-INITIAL

REV	DESCRIPTION	DRAWN	DATE
		APPROVED	DATE

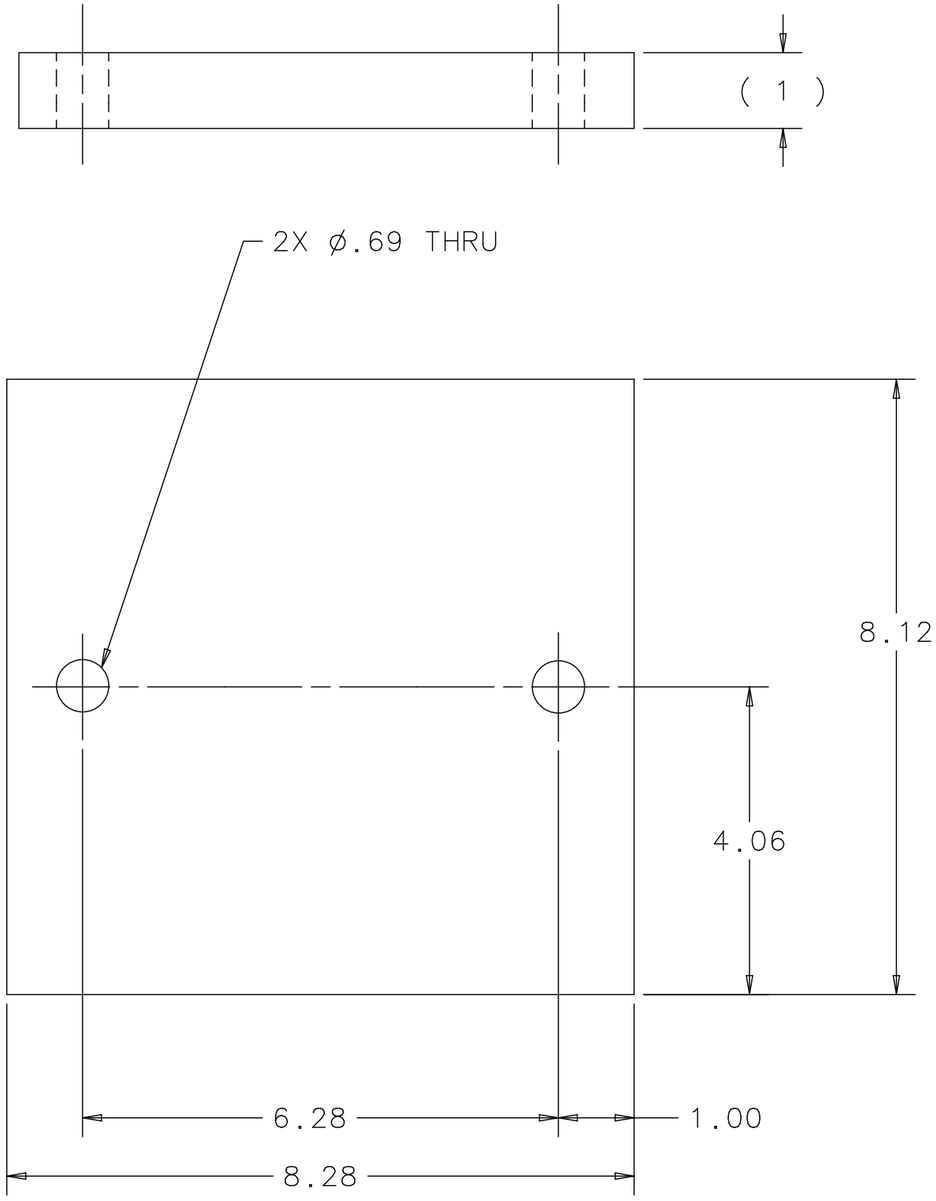

UNLESS OTHERWISE SPECIFIED			ORIGINATOR	W.CYKO	13-NOV-2006
.XX	.XXX	ANGLES	DRAWN	S.KINDELBERGER	13-NOV-2006
± .01	± ---	± ---	CHECKED	W.CYKO	27-DEC-2006
1. BREAK ALL SHARP EDGES .015 MAX.			APPROVED	W.CYKO	27-DEC-2006
2. DO NOT SCALE DRAWING.			USED ON	MB-444185 & MC-444250	
3. DIMENSIONS BASED UPON ASME Y14.5M-1994					
4. MAX. ALL MACH. SURFACES 250			MATERIAL	PLATE, 1" THK. CARBON STEEL A36	
5. DRAWING UNITS: INCHES					

FERMI NATIONAL ACCELERATOR LABORATORY
UNITED STATES DEPARTMENT OF ENERGY

MINERVA-DETECTOR-MECHANICAL PLANE SUPPORT FRAME SUPPORT COLUMN TOP PLATE END

SCALE	DRAWING NUMBER	SHEET	REV
1:2	3938.300-MB-444237	1 OF 1	

CREATED WITH : Ideas12NXSeries | GROUP: PPD/MECHANICAL DEPARTMENT

Created: 14:00:39 on 02-05-07 (D-M-Y) By: kilmer State: 1-INITIAL

REV	DESCRIPTION	DRAWN	DATE
		APPROVED	DATE

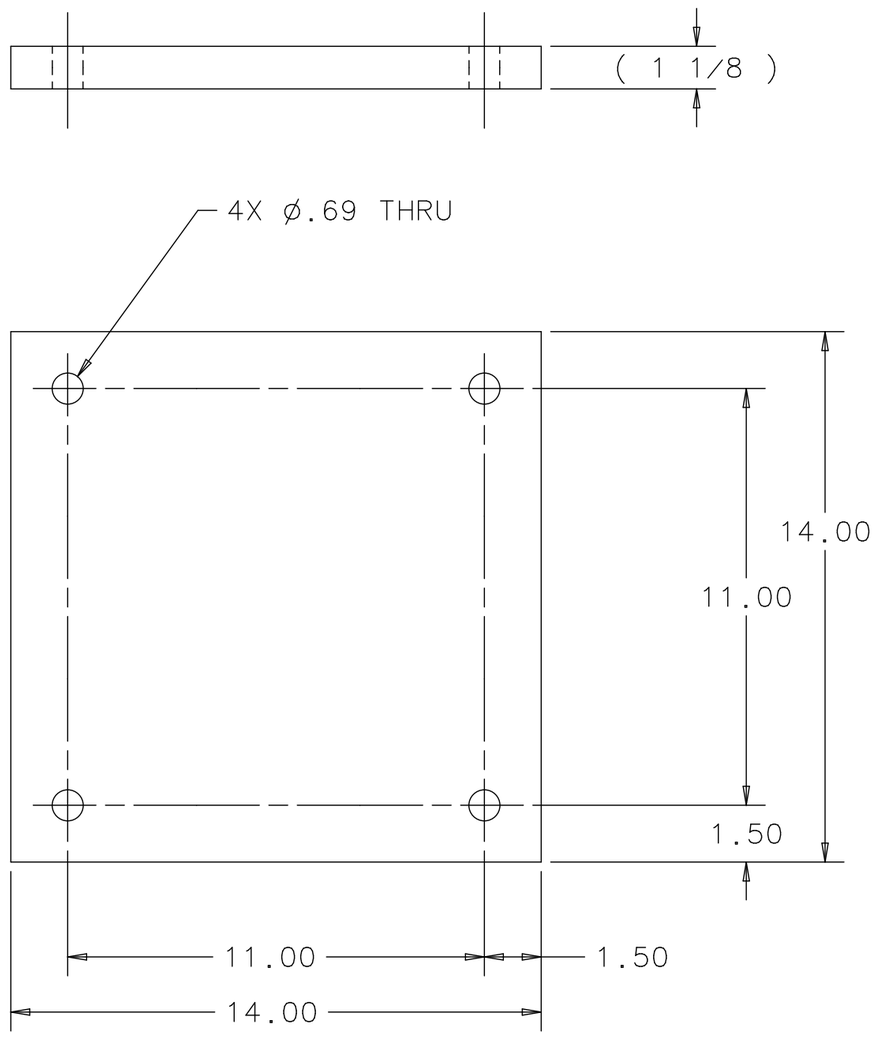

UNLESS OTHERWISE SPECIFIED			ORIGINATOR	W.CYKO	13-NOV-2006
.XX	.XXX	ANGLES	DRAWN	S.KINDELBERGER	13-NOV-2006
± .01	± ---	± ---	CHECKED	W.CYKO	27-DEC-2006
1. BREAK ALL SHARP EDGES MAX. 2. DO NOT SCALE DRAWING. 3. DIMENSIONS BASED UPON ASME Y14.5M-1994 4. MAX. ALL MACH. SURFACES 250 5. DRAWING UNITS: U.S. INCH			APPROVED	W.CYKO	27-DEC-2006
			USED ON	MC-444185 MC-444250 MC-444276	
			MATERIAL	PLATE, 1 1/8 THK. CARBON STEEL A36	

FERMI NATIONAL ACCELERATOR LABORATORY
UNITED STATES DEPARTMENT OF ENERGY

MINERVA-DETECTOR-MECHANICAL PLANE SUPPORT FRAME SUPPORT COLUMN BASE PLATE

SCALE	DRAWING NUMBER	SHEET	REV
1:4	3938.300-MB-444238	1 OF 1	

CREATED WITH : Ideas12NXSeries | GROUP: PPD/MECHANICAL DEPARTMENT

Created: 14:01:51 on 02-05-07 (D-M-Y) By: kilmer State: 1-INITIAL

REV	DESCRIPTION	DRAWN	DATE
		APPROVED	DATE

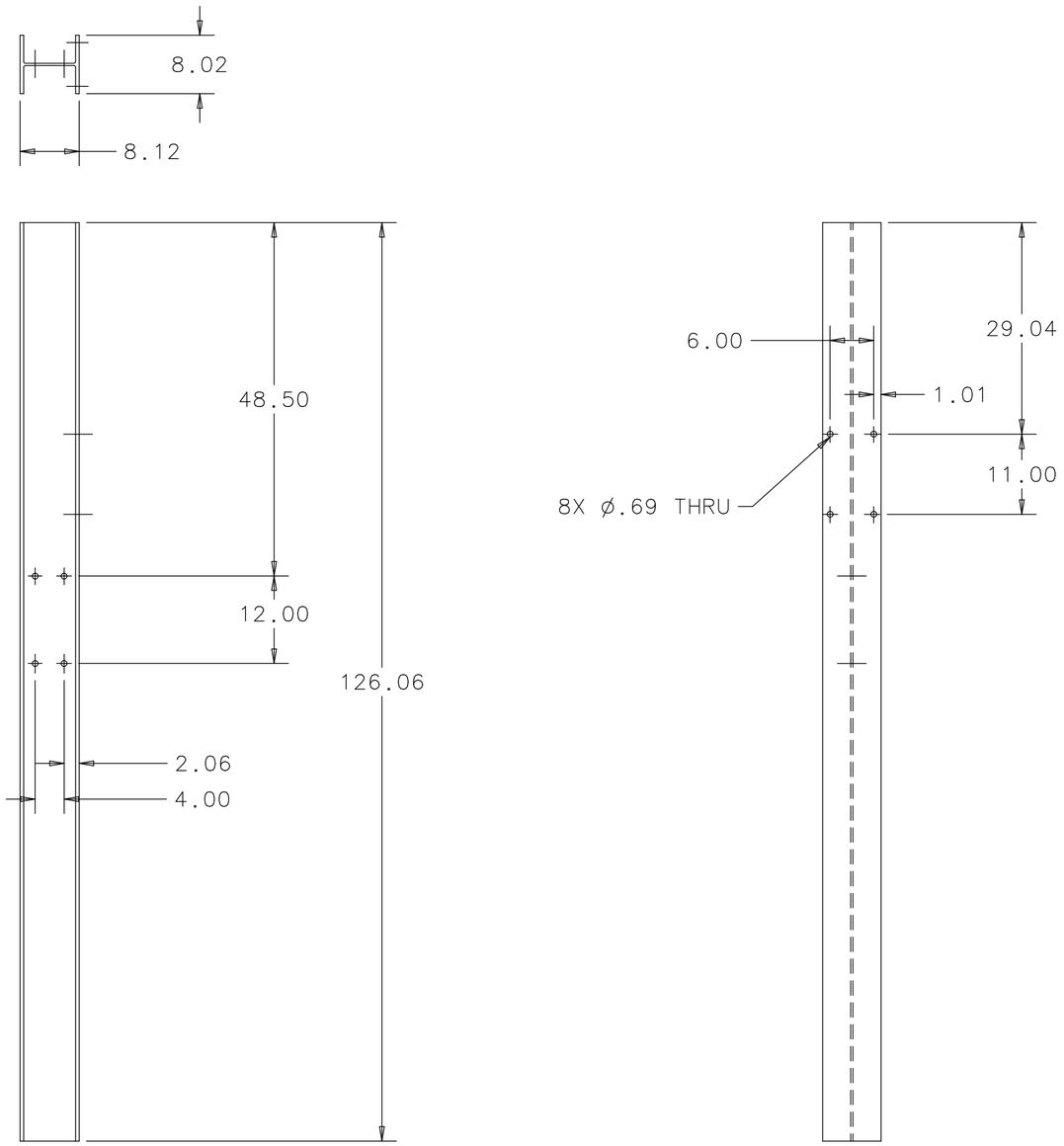

UNLESS OTHERWISE SPECIFIED			ORIGINATOR	W.CYKO	13-NOV-2006
.XX	.XXX	ANGLES	DRAWN	S.KINDELBERGER	13-NOV-2006
± .01	± ---	± ---	CHECKED	W.CYKO	27-DEC-2006
			APPROVED	W.CYKO	27-DEC-2006

1. BREAK ALL SHARP EDGES .015 MAX.
2. DO NOT SCALE DRAWING.
3. DIMENSIONS BASED UPON ASME Y14.5M-1994
4. MAX. ALL MACH. SURFACES 250
5. DRAWING UNITS: U.S. INCH

USED ON: MC-444185

MATERIAL: W8 x 35.0 WIDE FLANGE BEAM

FERMI NATIONAL ACCELERATOR LABORATORY
UNITED STATES DEPARTMENT OF ENERGY

MINERVA-DETECTOR-MECHANICAL SUPPORT FRAME PLANE END SUPPORT COLUMN

SCALE	DRAWING NUMBER	SHEET	REV
1/16	3938.300-MC-444249	1 OF 1	

CREATED WITH : Ideas12NXSeries | GROUP: PPD/MECHANICAL DEPARTMENT

Created: 14:02:48 on 02-05-07 (D-M-Y) By: kilmer State: 1-INITIAL

REV	DESCRIPTION	DRAWN	DATE
		APPROVED	DATE

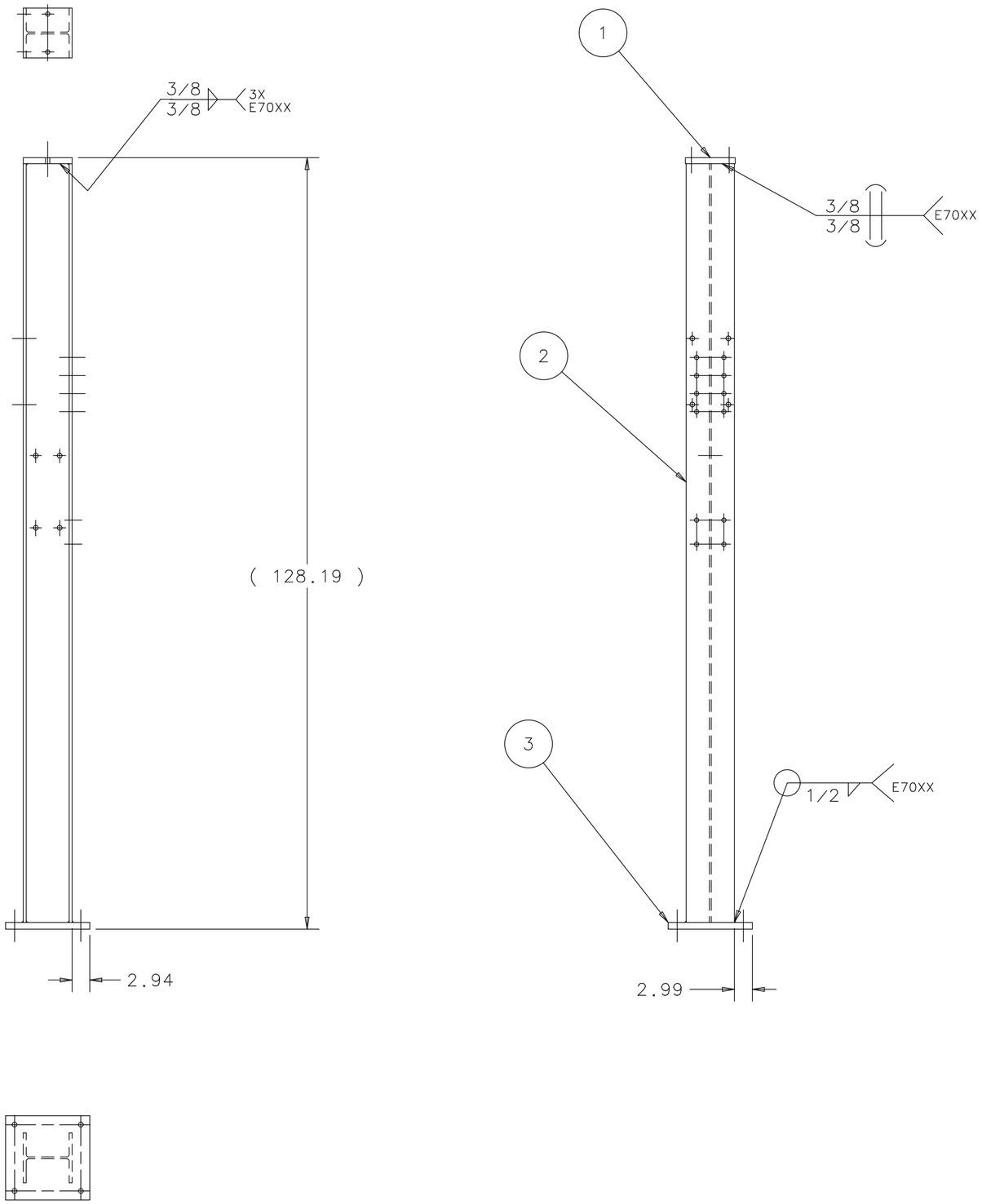

3	MB-444238	SUPPORT COLUMN BASE PLATE	1
2	MC-444252	BOOKEND SUPPORT COLUMN	1
1	MB-444237	SUPPORT COLUMN TOP PLATE END	1

UNLESS OTHERWISE SPECIFIED			ORIGINATOR	W.CYKO	13-NOV-2006
.XX	.XXX	ANGLES	DRAWN	S.KINDELBERGER	30-OCT-2006
± .03	± ---	± ---	CHECKED	W.CYKO	27-DEC-2006
			APPROVED	W.CYKO	27-DEC-2006

1. BREAK ALL SHARP EDGES .015 MAX.
2. DO NOT SCALE DRAWING.
3. DIMENSIONS BASED UPON ASME Y14.5M-1994
4. MAX. ALL MACH. SURFACES ---√
5. DRAWING UNITS: U.S. INCH

USED ON: ME-444204 & ME-444345

MATERIAL: SEE PARTS LIST ABOVE

FERMI NATIONAL ACCELERATOR LABORATORY
UNITED STATES DEPARTMENT OF ENERGY

MINERVA-DETECTOR-MECHANICAL PLANE SUPPORT FRAME BOOKEND COLUMN WELDMENT

SCALE	DRAWING NUMBER	SHEET	REV
1/16	3938.300-MC-444250	1 OF 1	

CREATED WITH : Ideas12NXSeries | GROUP: PPD/MECHANICAL DEPARTMENT

Created: 12:55:41 on 21-03-07 (D-M-Y) By: bcyko State: 1-INITIAL

REV	DESCRIPTION	DRAWN	DATE
		APPROVED	DATE

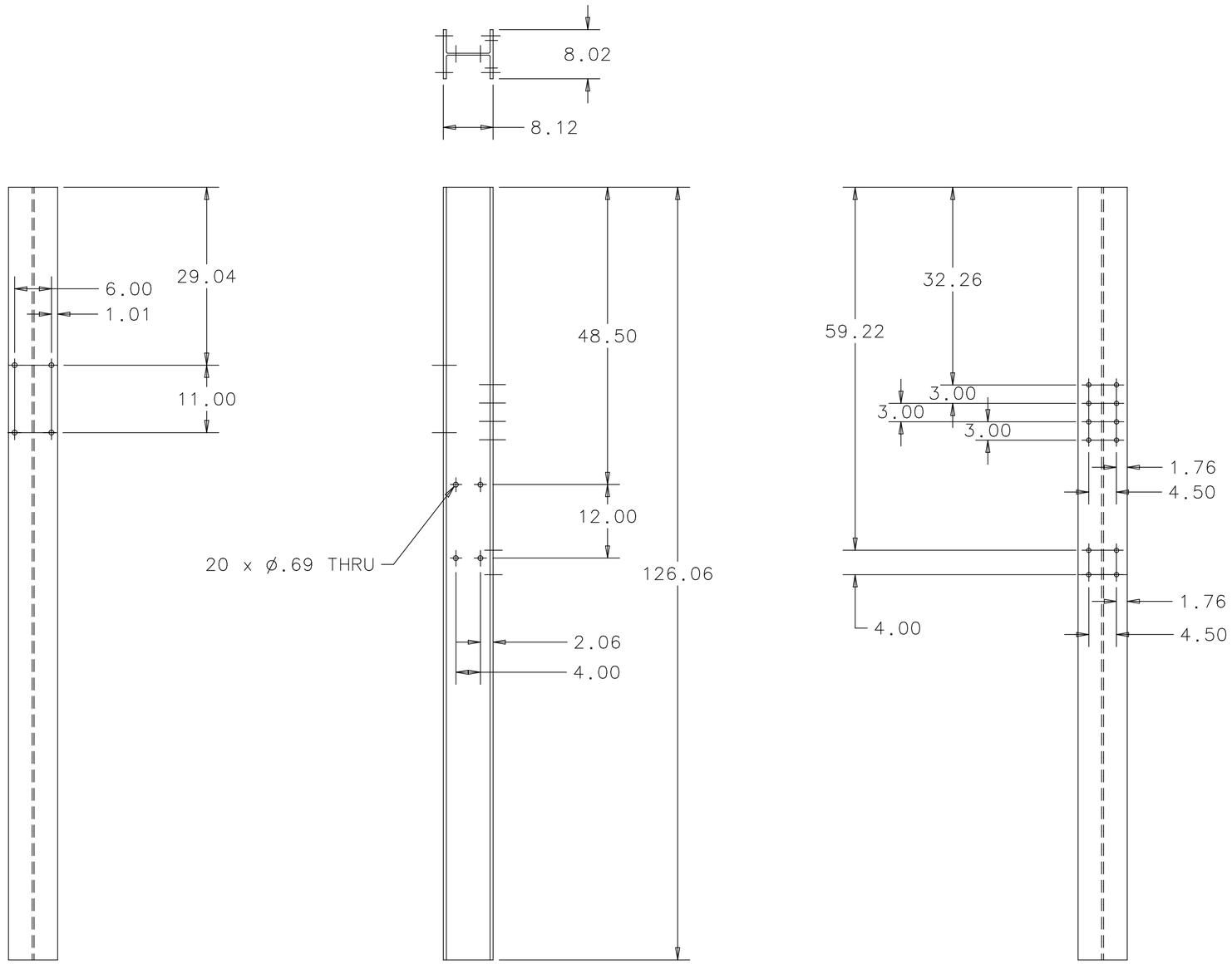

UNLESS OTHERWISE SPECIFIED			ORIGINATOR	W.CYKO	13-NOV-2006
.XX	.XXX	ANGLES	DRAWN	S.KINDELBERGER	13-NOV-2006
± .01	± ---	± ---	CHECKED	W.CYKO	27-DEC-2006
			APPROVED	W.CYKO	27-DEC-2006

1. BREAK ALL SHARP EDGES .015 MAX.
2. DO NOT SCALE DRAWING.
3. DIMENSIONS BASED UPON ASME Y14.5M-1994
4. MAX. ALL MACH. SURFACES 250
5. DRAWING UNITS: U.S. INCH

USED ON: MC-444250

MATERIAL: W8 x 35.0 WIDE FLANGE BEAM

FERMI NATIONAL ACCELERATOR LABORATORY
UNITED STATES DEPARTMENT OF ENERGY

MINERVA-DETECTOR-MECHANICAL SUPPORT FRAME PLANE BOOKEND COLUMN

SCALE	DRAWING NUMBER	SHEET	REV
1/16	3938.300-MC-444252	1 OF 1	

CREATED WITH : Ideas12NXSeries GROUP: PPD/MECHANICAL DEPARTMENT

Created: 15:08:33 on 02-05-07 (D-M-Y) By: kilmer State: 1-INITIAL

REV	DESCRIPTION	DRAWN	DATE
		APPROVED	DATE

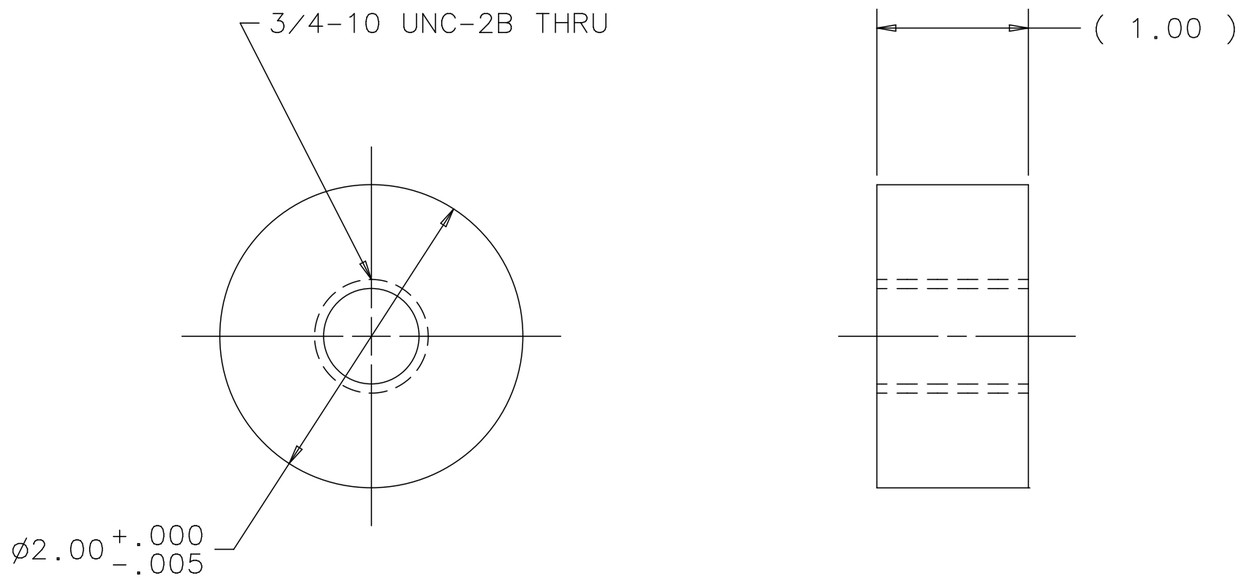

UNLESS OTHERWISE SPECIFIED			ORIGINATOR	J.KILMER	15-NOV-2006
.XX	.XXX	ANGLES	DRAWN	G.SMITH	15-NOV-2006
± .03	± ---	± ---	CHECKED	W.CYKO	08-DEC-2006
			APPROVED	J.KILMER	08-DEC-2006

1. BREAK ALL SHARP EDGES .015 MAX.
2. DO NOT SCALE DRAWING.
3. DIMENSIONS BASED UPON ASME Y14.5M-1994
4. MAX. ALL MACH. SURFACES 125
5. DRAWING UNITS: U.S. INCH

USED ON: MC-435682

MATERIAL: ASTM-A36 STEEL

FERMI NATIONAL ACCELERATOR LABORATORY
UNITED STATES DEPARTMENT OF ENERGY

MINERVA-DETECTOR-MECHANICAL
PLANE SUPPORT FRAME
BOSS-TARGET SUPPORT FRAME

SCALE	DRAWING NUMBER	SHEET	REV
1:1	3938.330-MB-444273	1 OF 1	

CREATED WITH : Ideas12NXSeries | GROUP: PPD/MECHANICAL DEPARTMENT

Created: 13:49:08 on 02-05-07 (D-M-Y) By: kilmer State: 1-INITIAL

REV	DESCRIPTION	DRAWN	DATE
		APPROVED	DATE

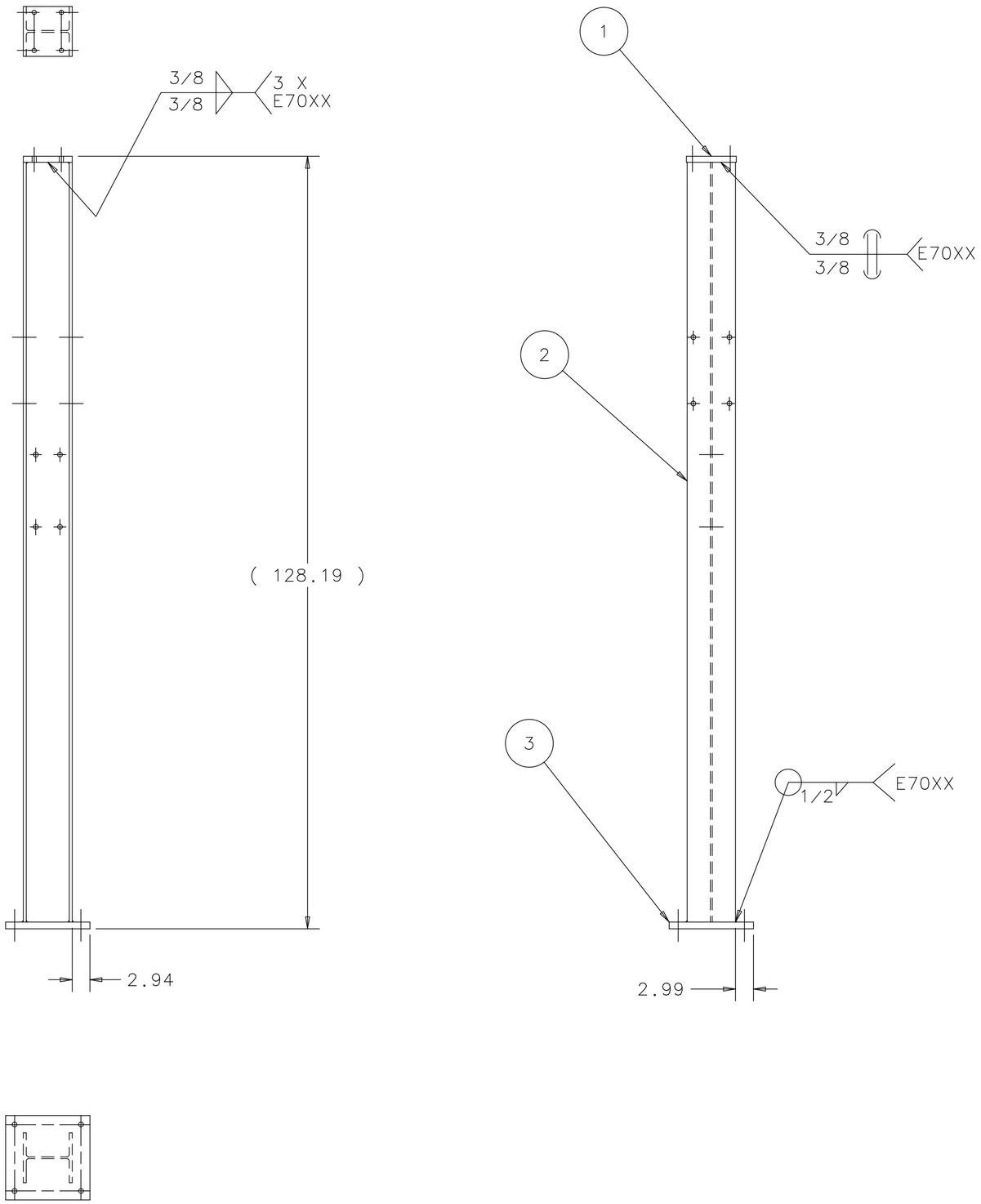

3	MB-444238	SUPPORT COLUMN BASE PLATE	1
2	MC-444282	SUPPORT COLUMN	1
1	MB-444236	SUPPORT COLUMN TOP PLATE	1

UNLESS OTHERWISE SPECIFIED					
.XX	.XXXX	ANGLES	ORIGINATOR	W.CYKO	15-NOV-2006
± .03	± ---	± ---	DRAWN	S.KINDELBERGER	15-NOV-2006
			CHECKED	W.CYKO	27-DEC-2006
			APPROVED	W.CYKO	27-DEC-2006

1. BREAK ALL SHARP EDGES .015 MAX.
2. DO NOT SCALE DRAWING.
3. DIMENSIONS BASED UPON ASME Y14.5M-1994
4. MAX. ALL MACH. SURFACES 250
5. DRAWING UNITS: U.S. INCH

USED ON: ME-444204 & ME-444345

MATERIAL: SEE PARTS LIST ABOVE

FERMI NATIONAL ACCELERATOR LABORATORY
UNITED STATES DEPARTMENT OF ENERGY

MINERVA-DETECTOR-MECHANICAL SUPPORT FRAME PLANE COLUMN WELDMENT

SCALE	DRAWING NUMBER	SHEET	REV
1/16	3938.300-MC-444276	1 OF 1	

CREATED WITH : Ideas12NXSeries | GROUP: PPD/MECHANICAL DEPARTMENT

Created: 12:44:15 on 21-03-07 (D-M-Y) By: bcyko State: 1-INITIAL

REV	DESCRIPTION	DRAWN	DATE
		APPROVED	DATE

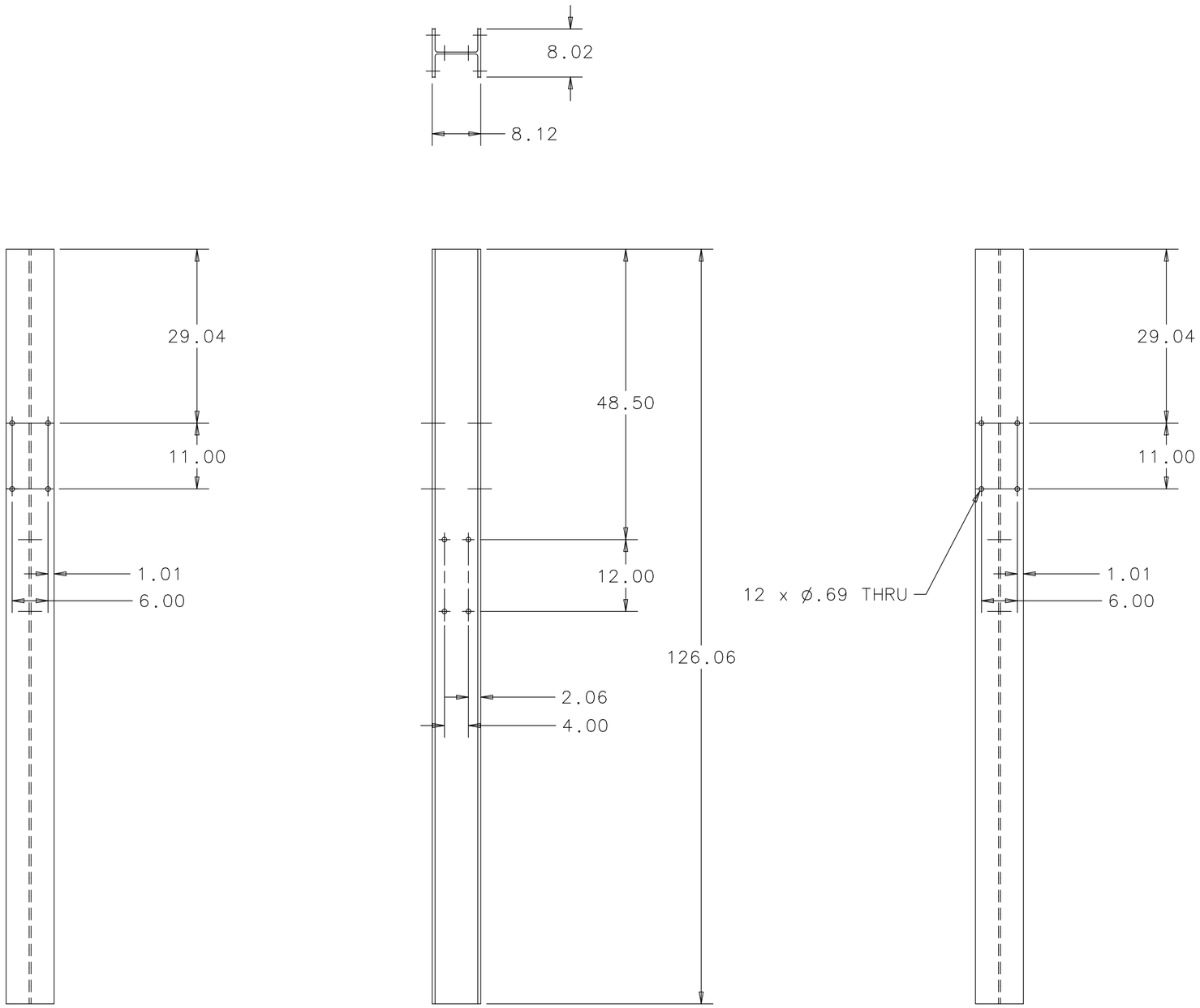

UNLESS OTHERWISE SPECIFIED			ORIGINATOR	W.CYKO	16-NOV-2006
.XX	.XXX	ANGLES	DRAWN	S.KINDELBERGER	16-NOV-2006
± .01	± ---	± ---	CHECKED	W.CYKO	27-DEC-2006
			APPROVED	W.CYKO	27-DEC-2006

1. BREAK ALL SHARP EDGES .015 MAX.
2. DO NOT SCALE DRAWING.
3. DIMENSIONS BASED UPON ASME Y14.5M-1994
4. MAX. ALL MACH. SURFACES 250
5. DRAWING UNITS: U.S. INCH

USED ON: MC-444276

MATERIAL: W8 x 35.0 WIDE FLANGE BEAM

FERMI NATIONAL ACCELERATOR LABORATORY
UNITED STATES DEPARTMENT OF ENERGY

MINERVA-DETECTOR-MECHANICAL SUPPORT FRAME PLANE SUPPORT COLUMN

SCALE	DRAWING NUMBER	SHEET	REV
1/16	3938.300-MC-444282	1 OF 1	

CREATED WITH : Ideas12NXSeries GROUP: PPD/MECHANICAL DEPARTMENT

Created: 15:09:49 on 02-05-07 (D-M-Y) By: kilmer State: 1-INITIAL