Fermilab

Particle Physics Division

Mechanical Department Engineering Note

Number: MD-ENG- 553 Date: October 10, 2016

Project: ND RF enclosure support

Project Internal Reference:

Title: Calculations for support structure

Author(s): Jim Kilmer

Reviewer(s): Bob Woods Bob Woods 10/10/16

Key Words:

Abstract/Summary:

This note includes the calculations to show that the support structure is designed to the applicable code.

Applicable Codes:

Manual of Steel Construction, AISC, ninth edition.

Support base for RF Shielded Room
9/16/2016
Jim Kilmer

The Neutrino Division has asked PPD to provide a new setup for an old RF screen room that was used in the Accelerator Division. The room is to be set up in the second floor counting room at Dzero. The room floor will be at the same height as the raised computer floor in the counting room. To do that the RF room must be supported about 20 inches off the concrete floor. A steel frame has been designed to accomplish that. This document shows the calculaitons for that frame. The chosen material for the frame is a C3 by 6 lb/ft channel. The main drawing for the frame is F10064066 which is attached. The plan is to hold the support fram up on plastic cribbing to isolate it from building ground and tie it to the detector ground (the RF room screen). Assume that the maximum load on the frame including the weight of the screen room is 100 lb/ft^2. With an area of 49 ft^2 the total load is then 4900 pounds. The frame is made in halfs and bolted together to allow easier installation.

$$\frac{100\cdot\frac{lbf}{ft^2}}{\left(\frac{144\cdot in^2}{ft^2}\right)} = 0.694\cdot\frac{lbf}{in^2}$$ Load on the frame

$W := 4900\cdot lbf$ Total load on the frames

$S := 1.38\cdot in^3$ Section modulus of the C3 by 6 channel.

$F_y := 36$ Channel material yeild in Ksi

$b_f := 1.595\cdot in$ flange width of channel

$t_f := 0.273\cdot in$ Flange thickness (average)

$A_f := b_f\cdot t_f$ Flange Area

$d := 3.0\cdot in$ Depth of channel

Calculate the loads on the two outside long channels using the layout of the section of the full frame at the bottom left of drawing F10064066. Channels A and D support one half of the load of the area between channels A abd B abd C an D

$$w_1 := \frac{12\cdot 0.694\cdot\frac{lbf}{in}}{2} = 4.164\cdot\frac{lbf}{in}$$ Load per inch on channels A or D

For channel B it supports one half of the laod between A and B and one half of the load between B an C. a Similar case exhists for channel C.

$$w_2 := \frac{12\cdot 0.694\cdot\frac{lbf}{in}}{2} + \frac{60\cdot 0.694\cdot\frac{lbf}{in}}{2} = 24.984\cdot\frac{lbf}{in}$$ Load on channels B and C

Use Case 1, page 2-206 of the AISC code. First channels A and D.

$l := 92.81 \cdot in$

$R_A := \frac{l \cdot w_1}{2} = 193.23 \cdot lbf$ Reaction force at each support on ends of channels A,D

$M_{max} := \frac{w_1 \cdot l^2}{8} = 4.483 \times 10^3 \cdot lbf \cdot in$ Moment on channels A and D

$f_b := \frac{M_{max}}{S} = 3.249 \times 10^3 \cdot psi$ Bending stress on A and D

Next do channels B and C.

$l := 92.81 \cdot in$

$R_B := \frac{l \cdot w_2}{2} = 1.159 \times 10^3 \cdot lbf$ Reaction force at each support on ends of channels B and C

$M_{max} := \frac{w_2 \cdot l^2}{8} = 2.69 \times 10^4 \cdot lbf \cdot in$ Moment on channels B and C

$f_b := \frac{M_{max}}{S} = 1.949 \times 10^4 \cdot psi$ Bending stress on B and C

Since B an C have the largest bending stress calculate teh Maximum allowable stress for those channels. Use the Specifications Chapter F page 5-45.

$L_B := 12 \cdot in$ Distance betweenlateral supports in the frame

This length must not exceed the lesser of the following

$\frac{76 \cdot b_f}{\sqrt{F_y}} = 20.203 \cdot in$ OR $\frac{20000}{\left(\frac{d}{A_f}\right) \cdot F_y} = 80.636 \cdot in$

Since 12 inches is less than 20.203 inches it is posible to use:

$F_b := 0.66 \cdot F_y = 23.76$ Maximum allowable stress in Ksi

Since 19.5 Ksi is less than 23.7 Ksi the channels are OK in bending.

The frame is square with the load being carried by the ears so the same case should be usable to find the stresses on the bolts hodling the frame together.

$$l := 84 \cdot in$$

$$w := \frac{W}{l} = 58.333 \cdot \frac{lbf}{in}$$

$$V_{middle} := w \cdot \left(\frac{l}{2} - \frac{l}{2} \right) = 0 \cdot lbf$$ Consistent with the shear diagram in the code

However consider a free body of one half of the beam with requiring a force to hold the the beam half from moving. The vertical force would be the reaction force for that half of the frame or W/2

$$R := \frac{W}{2} = 2.45 \times 10^{3} \cdot lbf$$

The reaction force is held by fourteen 5/8"-11 bolts. From table I-D, page 4-5 of the code an A307 bolt has an allowable load in shear of 3.1 kips so in theory one bolt would be enough for this load and the frame uses 14.

The bolts can also be looked at as seeing the force in tension. If the Reaction force is viewed as a moment about the support then the center bolts see the moment as a tensile force through the center of the channel.

$$M := R \cdot 41 \cdot in = 1.004 \times 10^{5} \cdot lbf \cdot in$$

The tension force on the 14 bolts each is then

$$T := \frac{M}{1.5 \cdot in \cdot 14} = 4.783 \times 10^{3} \cdot lbf$$

The code in table I-A on page 4-3 shows that an A307 bolt 5/8 inch in diameter has an allowable load in tension of 6.1 kips which is greater than the tension calculated above. Therefore the bolts are OK in tension and OK for the service.

DESCRIPTION: RF SCREEN ROOM LAYOUT
CATEGORY1: LAYOUT PROJECT1: Mech:Equipment

REV	REVISION CONTROL DOCUMENT	DATES	SIGNATURES	
-	F10067425---RCD		DRAWN	
			APPROVED	

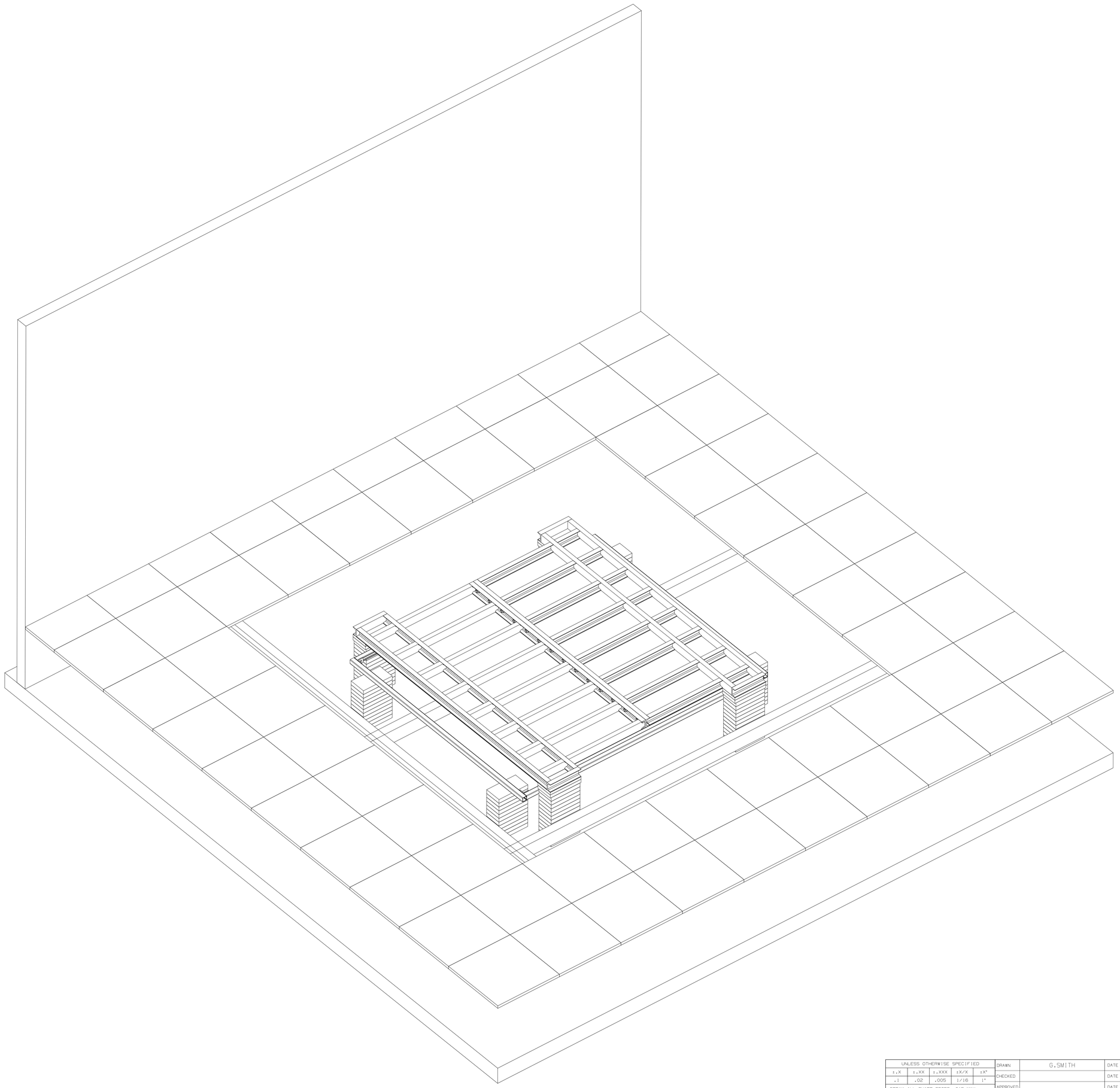

UNLESS OTHERWISE SPECIFIED				
±.X	±.XX	±.XXX	±X/X	±X°
.1	.02	.005	1/16	1°

BREAK ALL SHARP EDGES .015 MAX.
DO NOT SCALE DRAWING
DIMENSIONS BASED ON ASME Y14.5-2009
MAX. ALL MACH SURFACES 125
DRAWING UNITS: INCHES

DRAWN	G.SMITH	DATE	
CHECKED		DATE	
APPROVED		DATE	
USED ON			
MATERIAL			
GROUP: Particle Physics Mechanical Support		CAGE CODE: 0U5R6	

FERMI NATIONAL ACCELERATOR LABORATORY
UNITED STATES DEPARTMENT OF ENERGY

NAME: RF SCREEN ROOM LAYOUT

SCALE	SIZE	DRAWING NUMBER	SHEET	REV
1:1	E	F10067425	1 OF 1	-

DESCRIPTION: RF SCREEN ROOM FRAME WELDMENT
CATEGORY1 PROJECT: Mech-Design_layouts

REV	REVISION CONTROL DOCUMENT	DATES	SIGNATURES
-	F10064066---RCD		DRAWN
			APPROVED

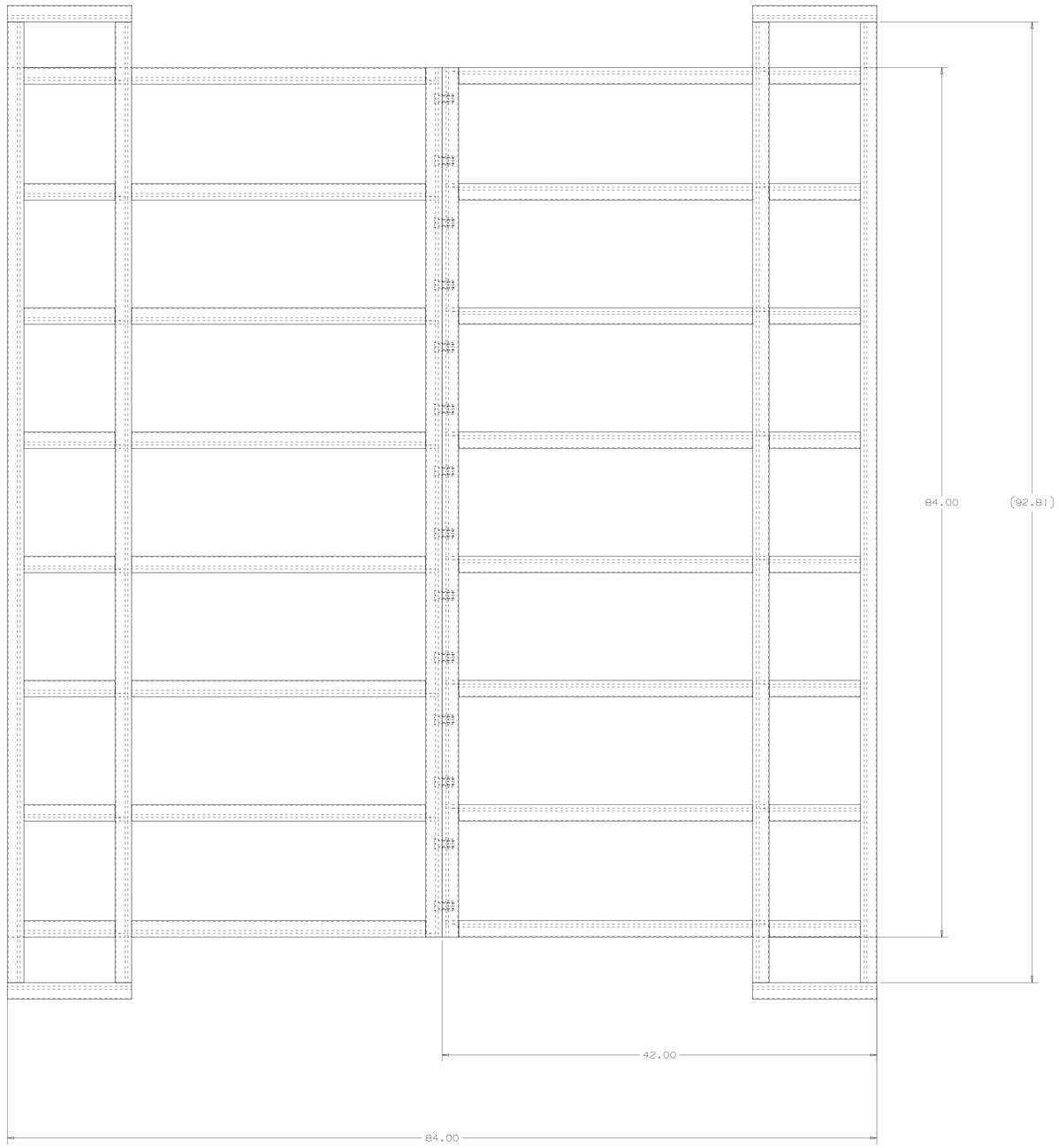

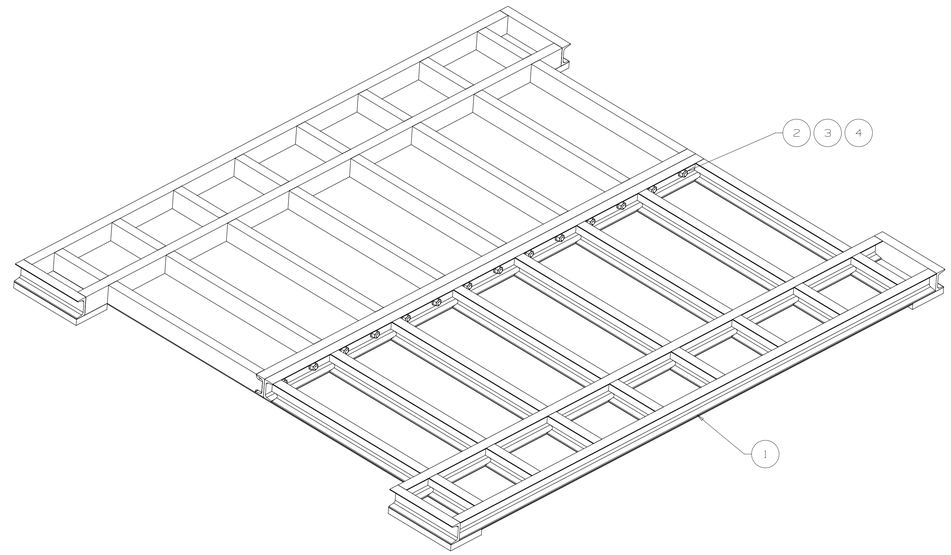

ISOMETRIC
SCALE 1:8

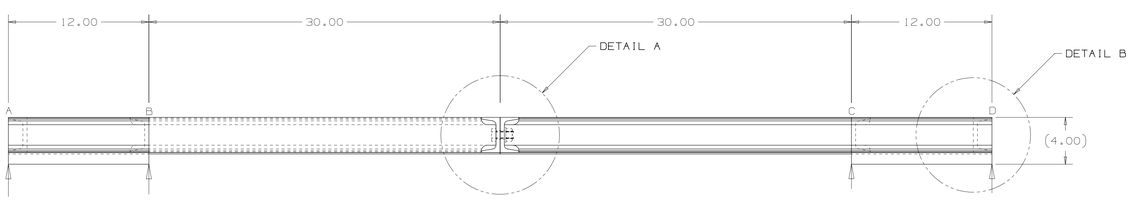

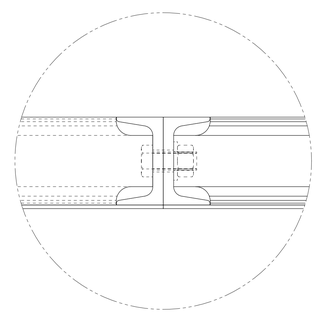

DETAIL A
SCALE 1:2

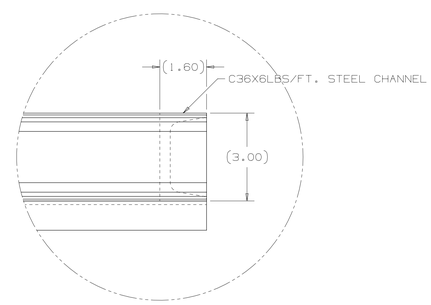

DETAIL B
SCALE 1:2

WEIGHT 880 LBS.

ITEM	PART NO.	DESCRIPTION OR SIZE	QTY.
4	COML	HHCS,5/8-11x1.5 LG., A307	14
3	COML	NUT-HEX, 5/8-11 , A307	14
2	COML	WASHER,5/8-0.656x1.312,SS316	14
1	F10064256	RF SCREEN ROOM FRAME WELDMENT	2

PARTS LIST

UNLESS OTHERWISE SPECIFIED

±.X	±.XX	±.XXX	±X/X	±X°
.1	.02	.005	1/16	1°

BREAK ALL SHARP EDGES .015 MAX.
DO NOT SCALE DRAWING
DIMENSIONS BASED ON ASME Y14.5-2009
MAX. ALL MACH SURFACES 125√
DRAWING UNITS: INCHES

DRAWN	S.SELLBERG	DATE	08-Sep-2016
CHECKED		DATE	
APPROVED		DATE	
USED ON			
MATERIAL			
GROUP: Particle Physics Mechanical Support		CAGE CODE: 0U5R6	

FERMI NATIONAL ACCELERATOR LABORATORY
UNITED STATES DEPARTMENT OF ENERGY

NAME: RF SCREEN ROOM FRAME WELDMENT

SCALE	SIZE	DRAWING NUMBER	SHEET	REV
1:1	E	F10064066	1 or 1	-