BERKELEY LAB

LAWRENCE BERKELEY NATIONAL LABORATORY

U.S. DEPARTMENT OF ENERGY

Composite Joining Techniques: Bolted Joints

LBNL Composites Workshop

February 29-March 3, 2016

Joint grip material is *anisotropic* for a typical fiber-reinforced flange

- In-plane, the design might be quasi-isotropic, but that's only *in*-plane
- Through the thickness (out-of-plane of the fibers) the plastic matrix dominates
- Typical moduli may be
  - in-plane tensile: 100 GPa
  - in-plane shear: 45 GPa
  - out-of-plane tensile: 6 GPa
  - out-of-plane shear: 3 Gpa
- 17:1 ratio of in-plane vs out-of-plane is *really* important to acknowledge for bolted joint behavior

So composite bolted joints break some of our engineering expectations

- They tend to be…
  - stiff in bending (like metal)
  - soft in thru-thickness compression (like plastic)
- The joint material often limits the bolt preload!
  - totally different from usual case, where it's the tensile strength of the bolt that drives torque specs
  - joint separation is a real concern
- High joint constant
  - joint does not carry much of the load

joint constant = (amount of external load taken by bolt) / (total external load that joint carries)
= $K_{bolt} / (K_{joint} + K_{bolt})$
= a.k.a "force ratio"

- Usually the bolt is "along-for-the-ride", but with composite flanges it's the exact opposite – generally the *joint* is the compliant member

STAR IDS is example of some challenges we face in our bolted joints for detector global supports

- flanges near IR → CFRP for low Z, low mass
- surrounding detectors can force small diameter flanges
- long narrow supports

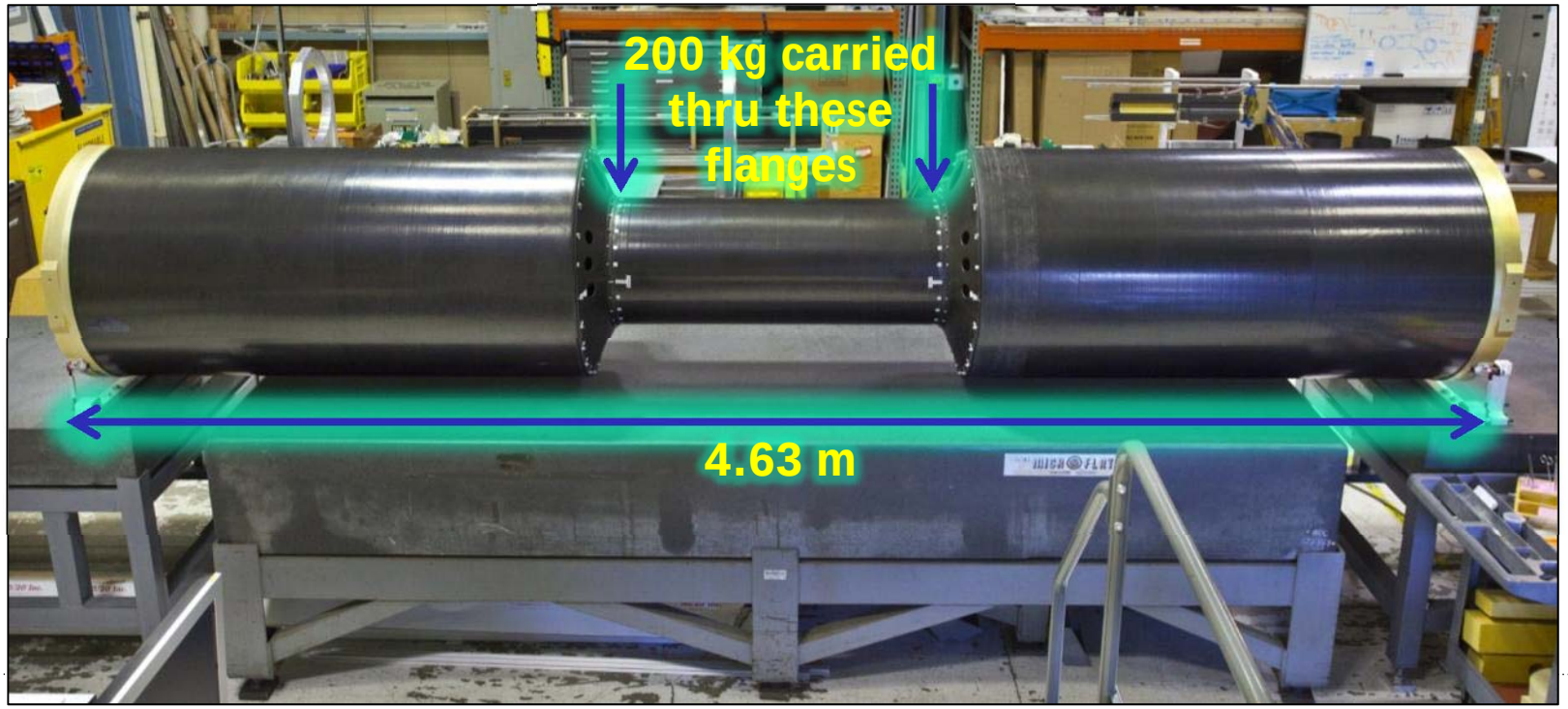

The joint flanges *really* matter in global deflection of the structure

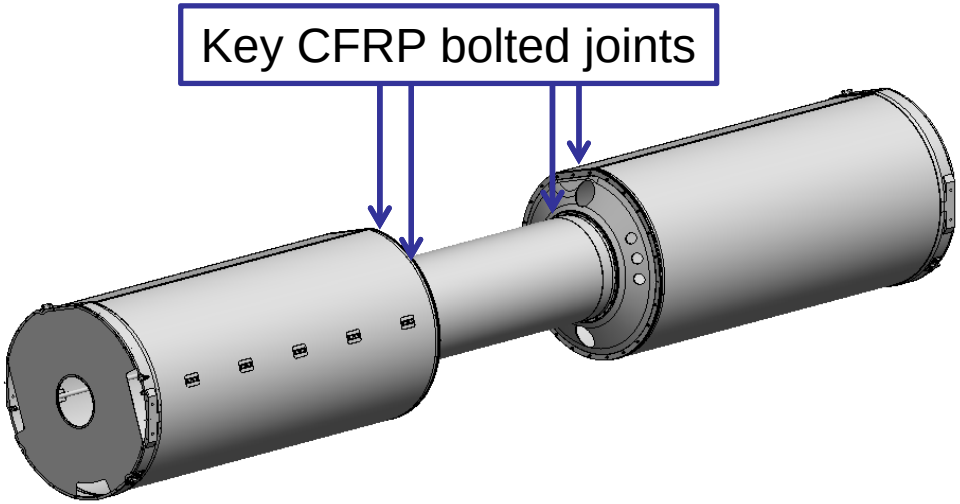

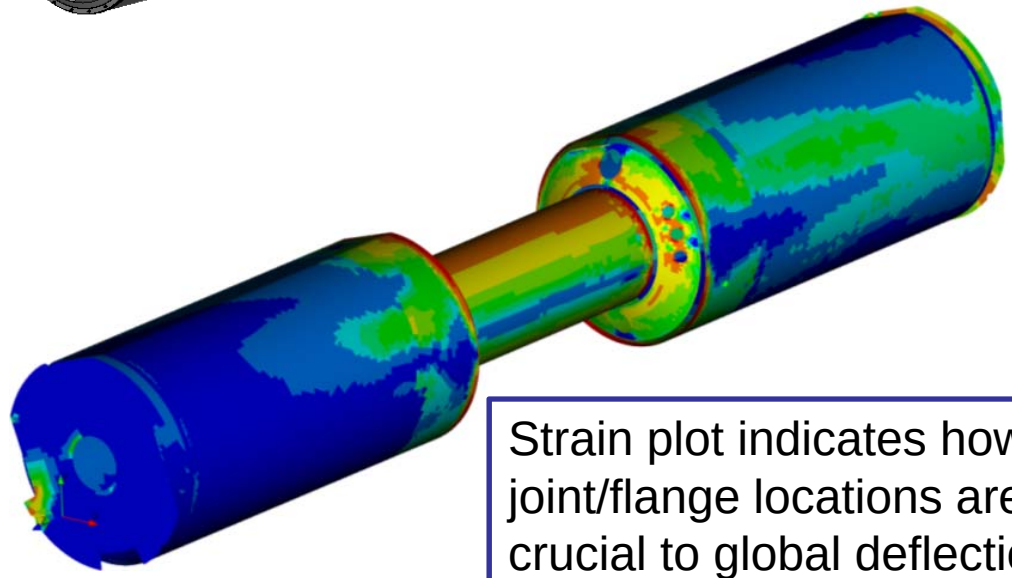

Strain plot indicates how joint/flange locations are crucial to global deflection

There is a temptation to initially model flanges as full face-face contacts (left). Big overconstraint. Falsely stiffens the model.

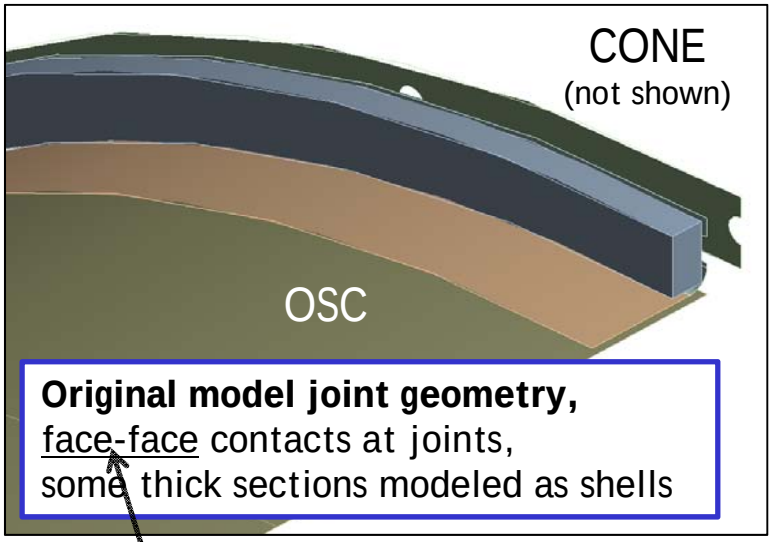

Original model joint geometry,
face-face contacts at joints,
some thick sections modeled as shells

Note:
Simply replacing face-face contacts with point contacts at hole locations would increase compliance 9% (separate study). Still insufficient to capture compliance accurately.

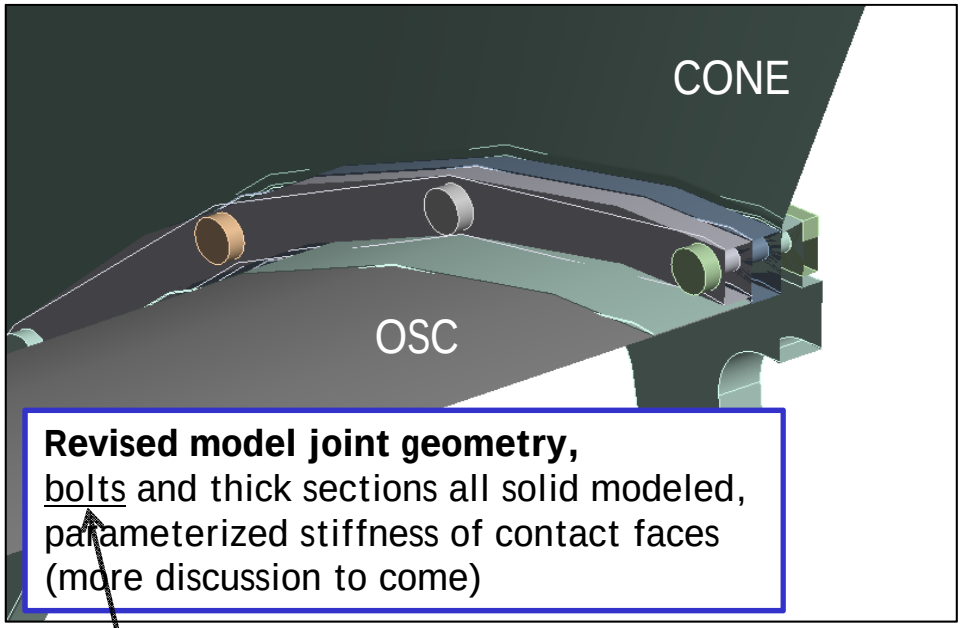

Revised model joint geometry,
bolts and thick sections all solid modeled,
parameterized stiffness of contact faces
(more discussion to come)

Nearly equivalently, can model as 6 DOF springs

Flanges often require 3D elements rather than shell (2D), to capture thru-thickness and torsion loads appropriately

- As approach edges, thick section deforms in modes where typical thin wall, in-plane assumptions do not apply
- Middle section, though 4mm thick, ok to model as shell
- At edges, where discrete joint loads effective, the shell assumption breaks down

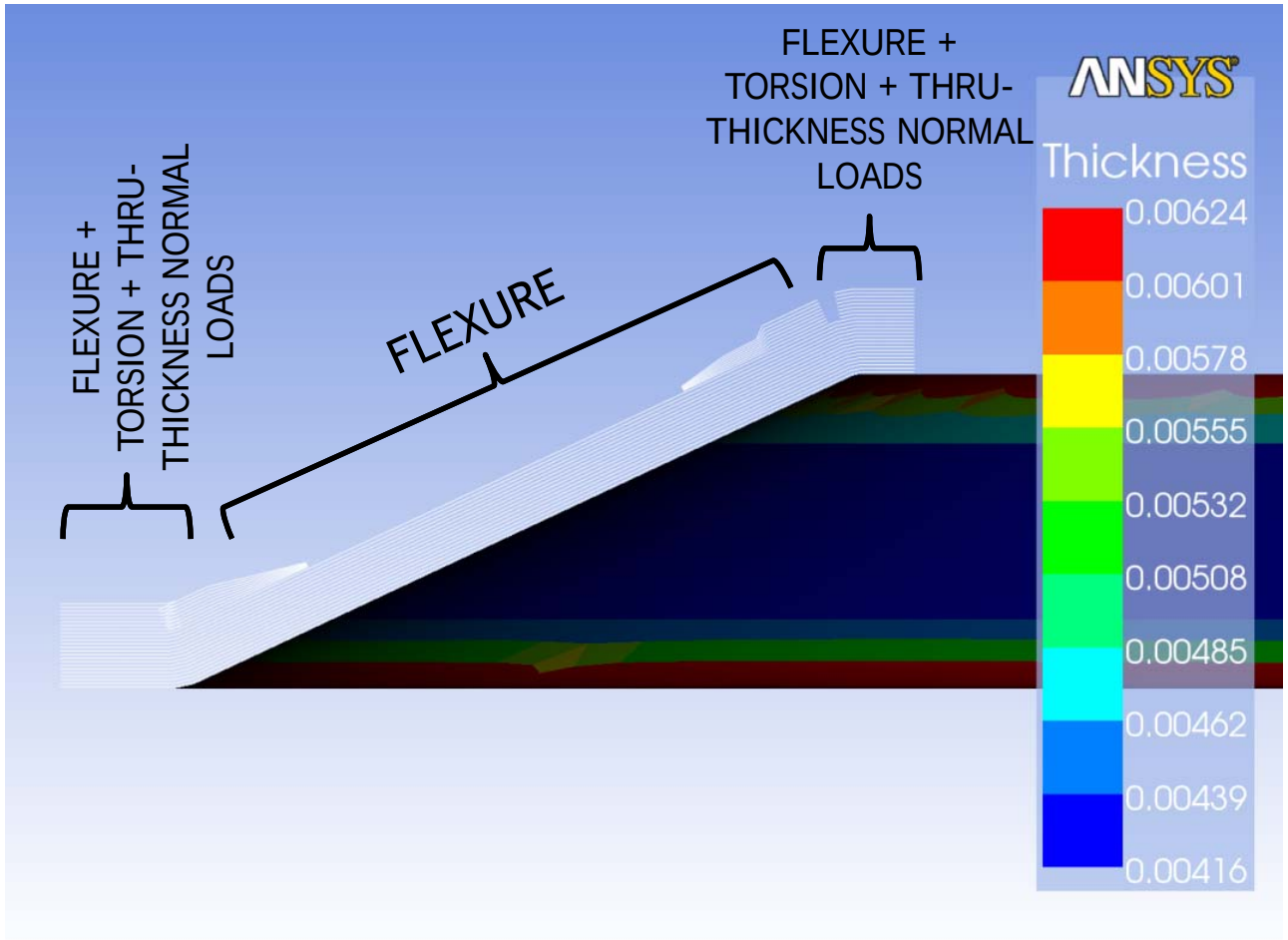

If softness of joint causes partial separation, then have to do a non-linear contact study

- To right is a local submodel with high mesh refinement and nonlinear contact definitions.
- “Nonlinear” means: evaluate over a series of substeps to capture the changing contact stiffness as the grip rotates and compresses.
- Computationally very expensive, and adverse on convergence.
- Apply load of correct magnitude to the submodel, then approximate it in the global model with linear springs.
- In this case, the effect of changing from a standard, high normal stiffness bonded contact to this nonlinear model was 39% increase in compliance, very significant.

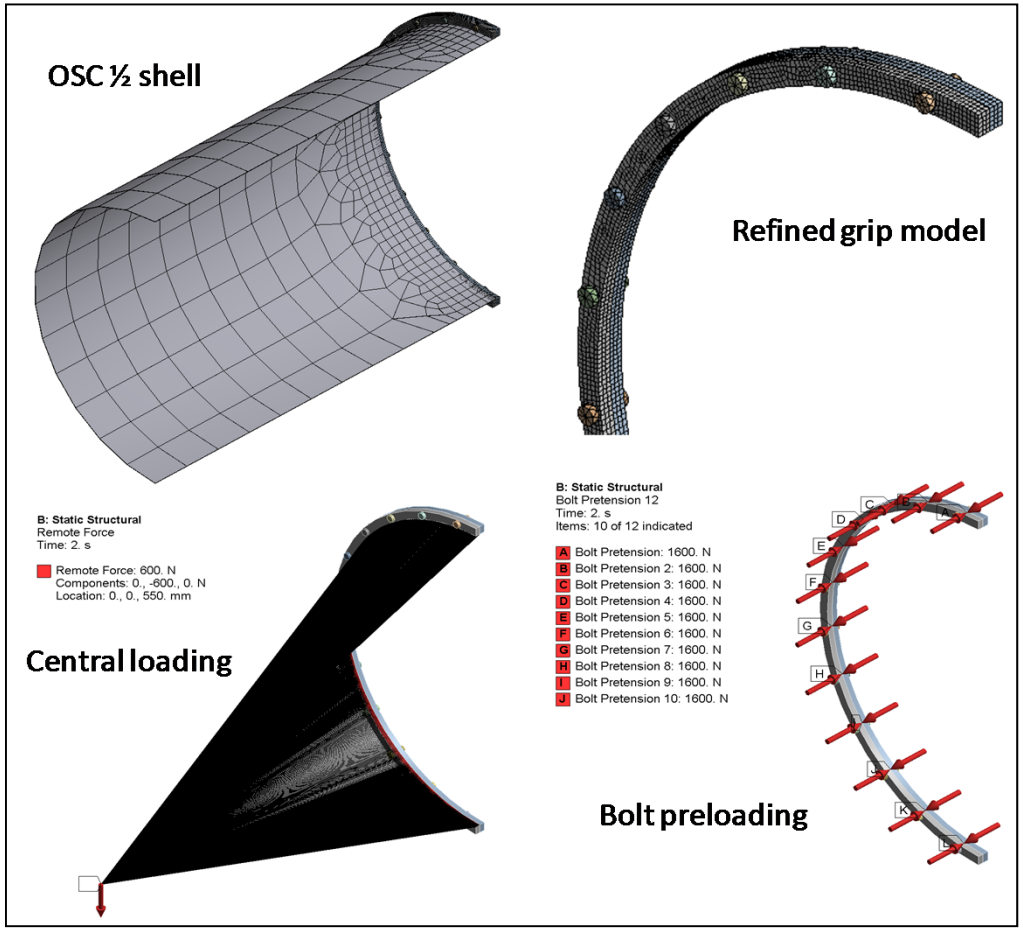

Non-flatness of joint interfaces is common and also affects stiffness

- Bolt preload has to close the gap of any non-flat interfaces
  - but we're often constrained to low bolt preload
  - so we notice this problem in cases where, with metal, we'd never know it
- In the prototype STAR IDS a partial, tapered joint gap of only 0.2 mm max width at the edge, added about 7-10% to the global structure compliance!
- In final version we machined the joint faces flat

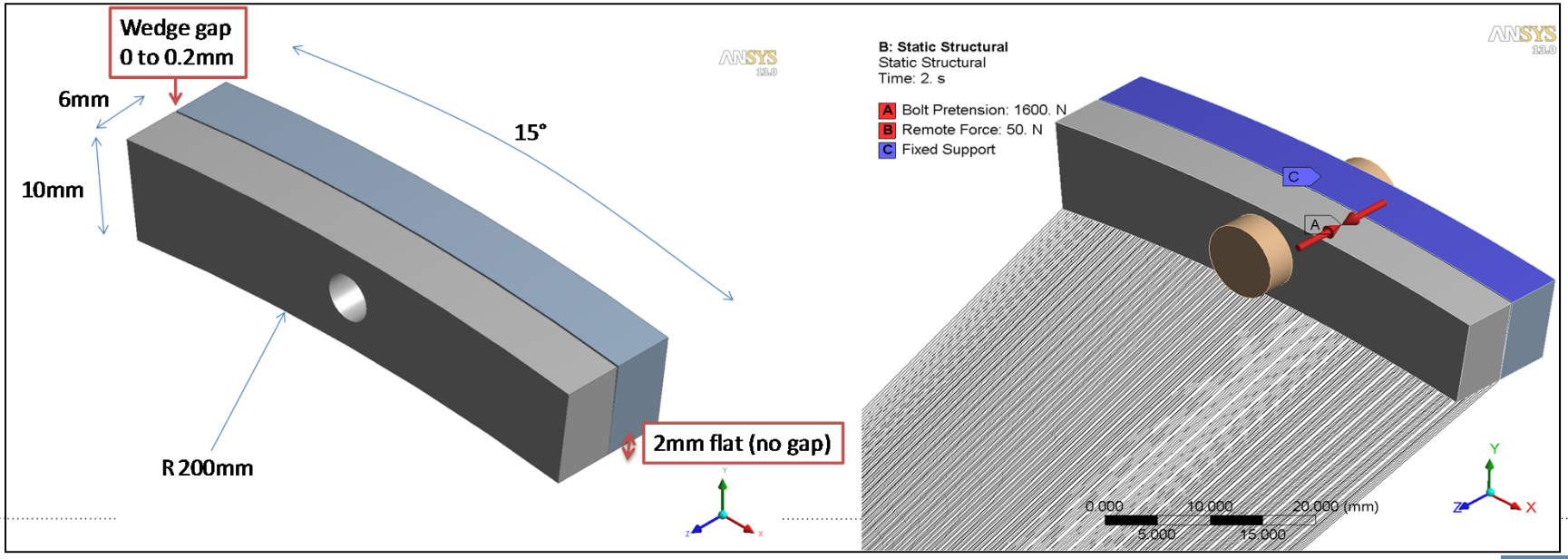
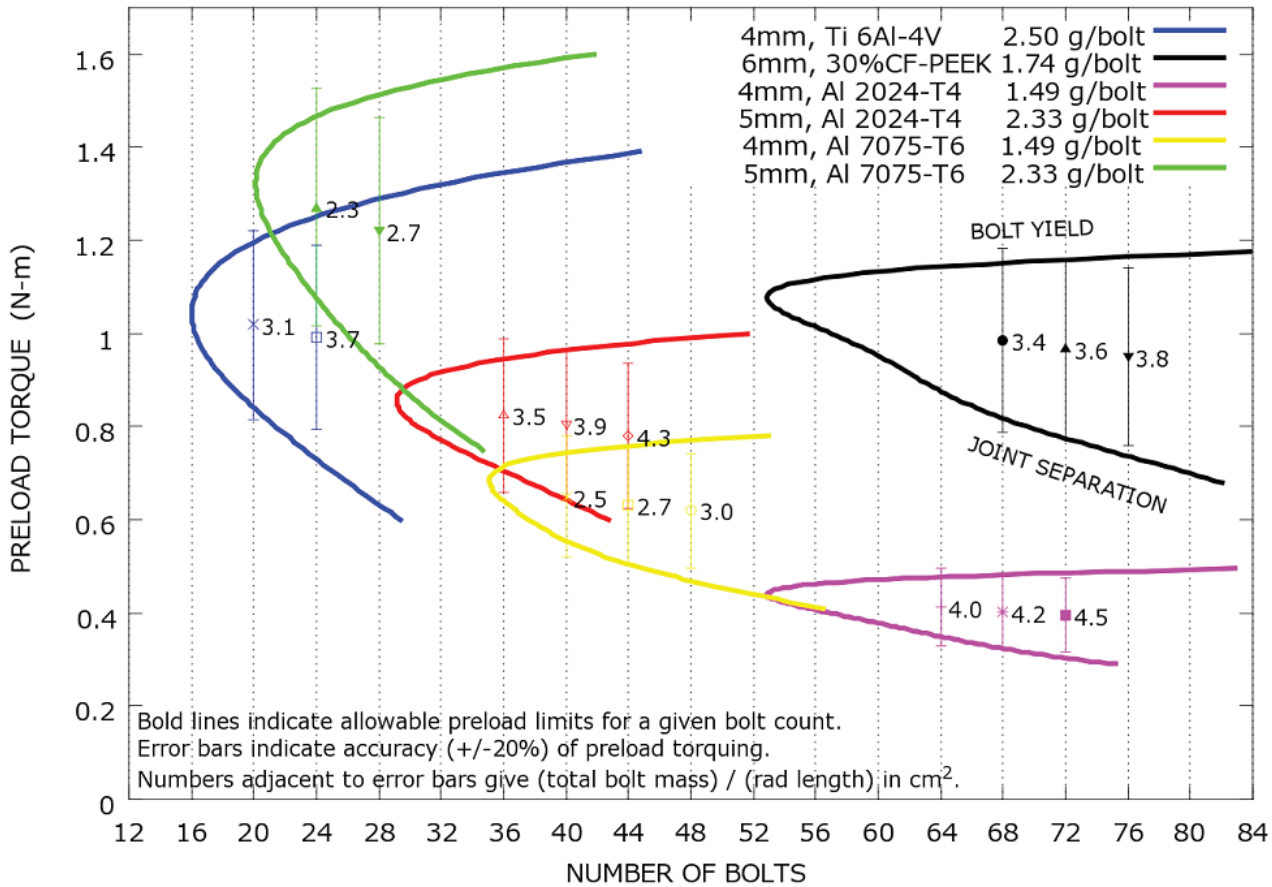
Ti 6Al-4V is probably the baseline bolt material for any joint in a detector with significant load to carry – the material reductions of weaker bolts are false savings, to first order.