Fermilab

Copy

Particle Physics Division
Mechanical Department Engineering Note

Number: MD-ENG-051 Date: July 02, 2004

Project Internal Reference: WBS 114

Project: NUMI ABSORBER

Title: 4.0 TON GANTRY LOW PROFILE BEAM AND LIFTERE HEAD

Author(s): ERNIE VILLEGAS

Reviewer(s): Ang Lee

Abstract Summary: BEAM AND LIFTER HEAD ARE DESIGN TO PLACE STEEL SHIELDING BLOCKS IN THE ABSORBER UPPER LAYERS WHERE THERE IS LIMITED HEAD ROOM.

Applicable Codes: WELDING----------ANSI/AWS D1.1
FABRICATION---AISC MANUAL OF STEEL CONTRUCTION.

Test Procedure: TEST WAS ACCOMPLISHED BY LOCATING AND FASTENING LIFTER HEAD WITH TWO INNER ¾-10 BOLTS AT MID-SPAN OF BEAM TO AN 18,000# LOAD RESTING ON THE FLOOR. THE BEAM WAS THEN FASTEN TO TWO CRANES ONE FOOT FROM EACH END. ON ONE CRANE A DYNAMOMETER WAS PLACED BETWEEN THE HOOK AND BEAM. THE ENDS

WERE THEN EQUALLY RAISED UNTIL A READING OF 5000# WAS ACHIEVED AND TENSION HELD FOR A PERIOD OF FIVE MINUTES. (SEE SKETCH BELOW)

TEST WAS WITNESS BY:

DAVE ERICKSON
OTTO ALVAREZ
WOJCIECH BLASZYNSKI
ERNIE VILLEGAS

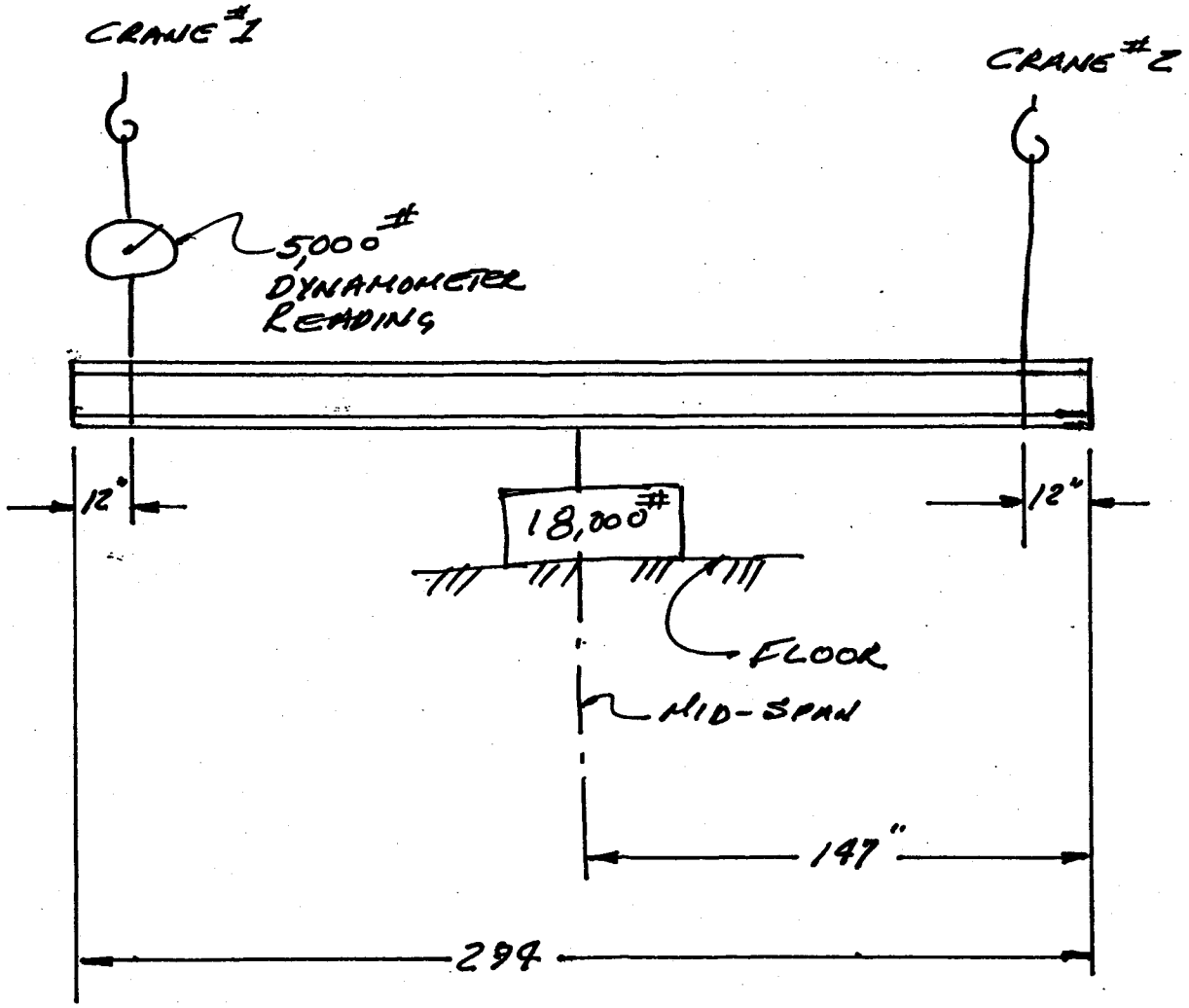

FERMILAB

ENGINEERING NOTE

SECTION	PROJECT	SERIAL-CATEGORY	PAGE
			1

SUBJECT: GANTRY LOW PROFILE BEAM & LIFTER HEAD

NAME: E.M. Allgyer

DATE: 3/31/04

REVISION DATE:

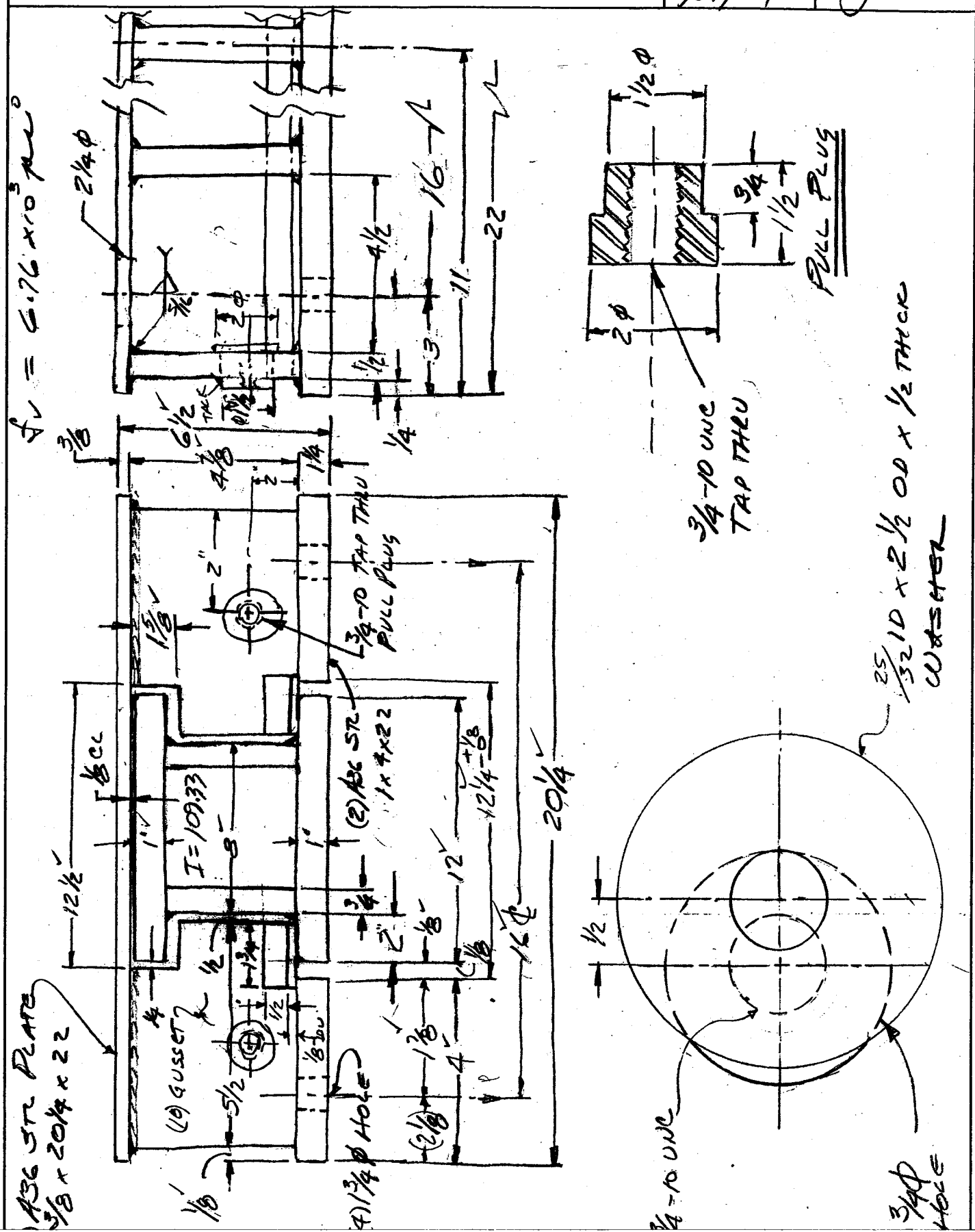

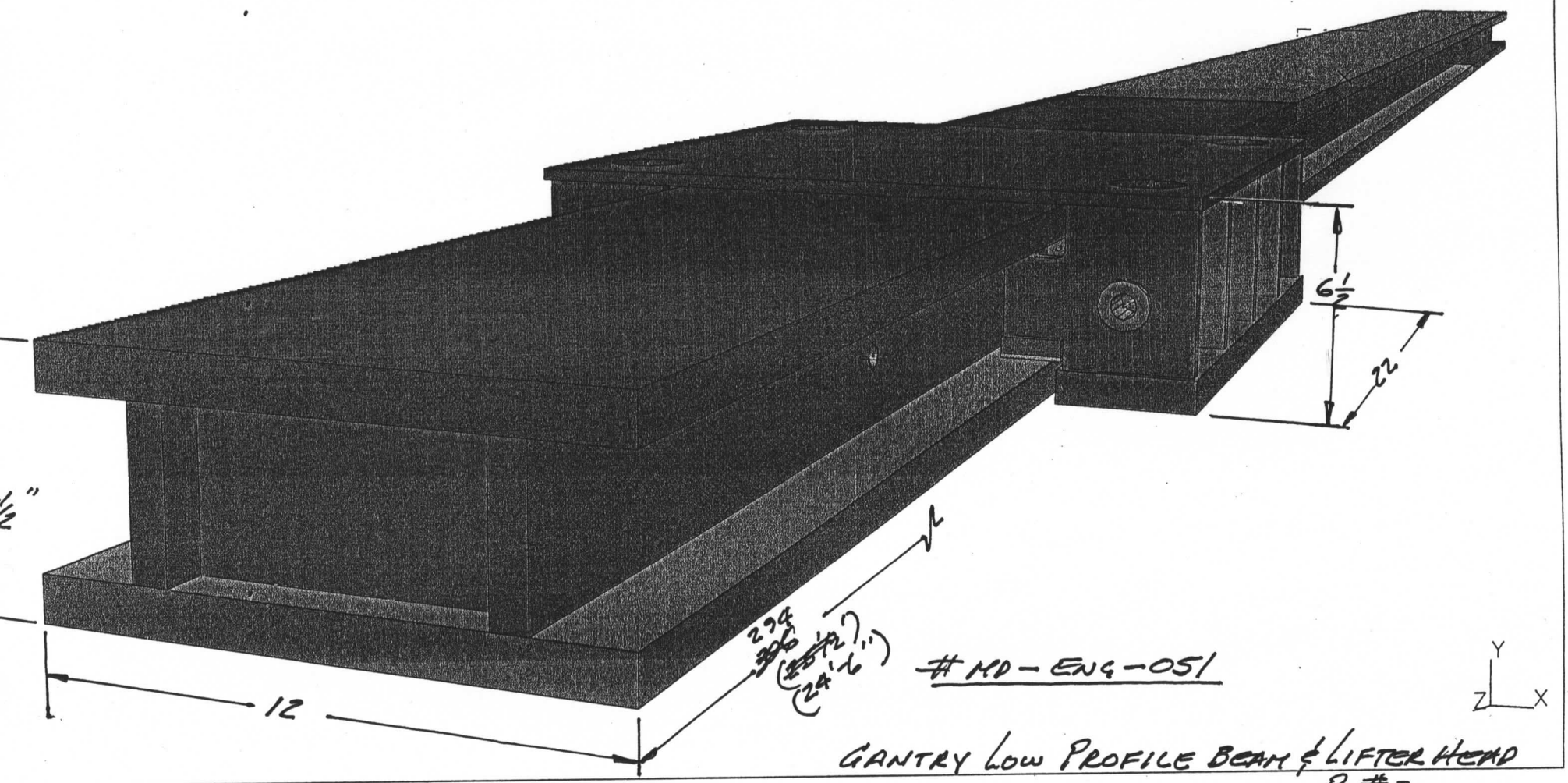

MD-ENG-051

GANTRY LOW PROFILE BEAM & LIFTER HEAD

Pg #2

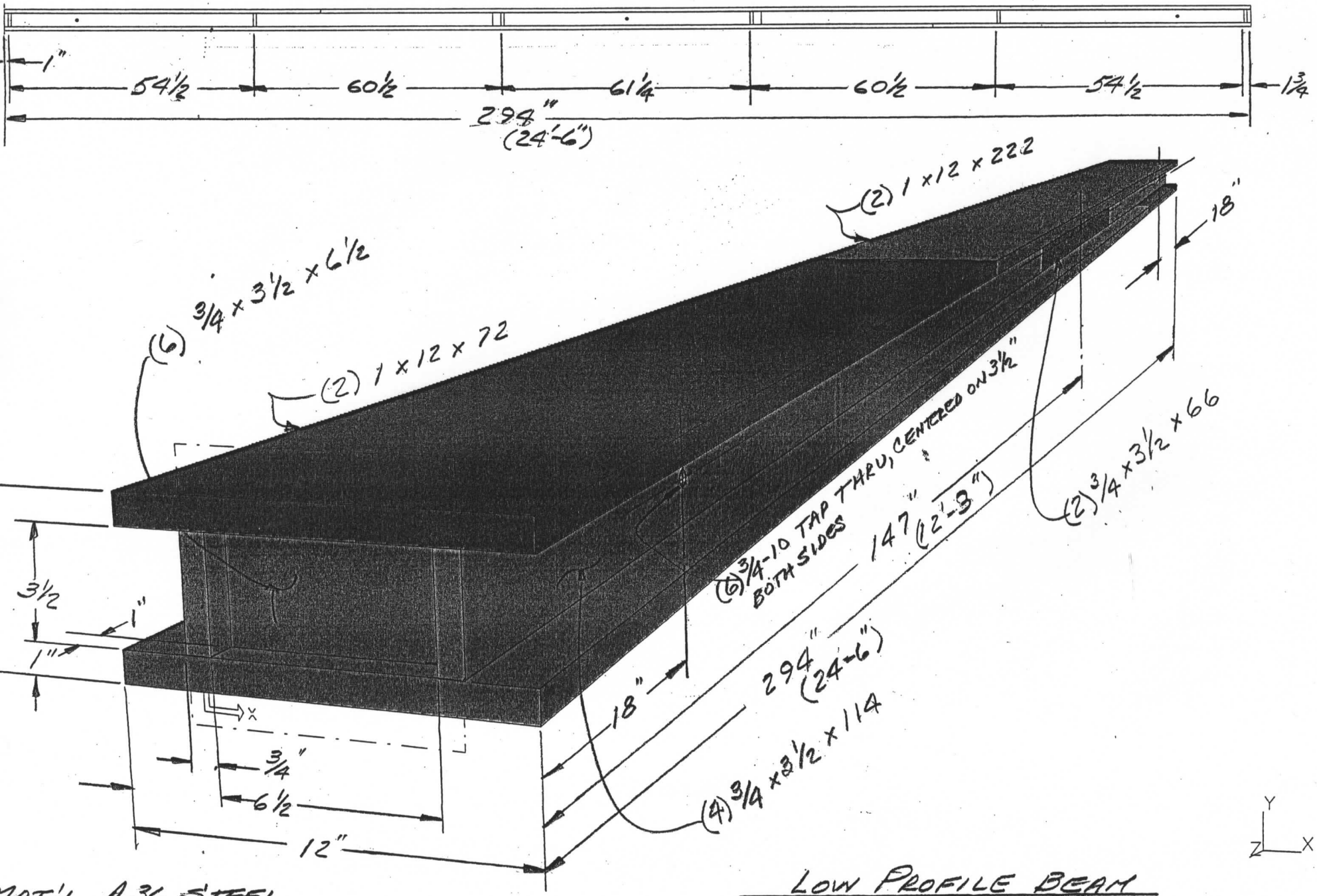

MAT'L. A36 STEEL

LOW PROFILE BEAM

Pg #3

ted by villegas on 22-Jun-04 , File: generic.pff

I-DEAS 9 m3: Simulation 22-Jul-04 15:06:20
/cadwhs/server04/ms_villegas/TAFT_HEADER_BEAM.mf1
LOW_PROFILE_BEAM

Group ID : None
Result Set : 2 - B.C. 1,STRESS_2,LOAD SET 1
Report Type : Contour Units : IN
Result Type : STRESS
Frame of Reference: Part Data Component: Max Shear

	Max Prin	Mid Prin	Min Prin	Max Shear (ALLOWED 14.4×10^3)	Von Mises (ALLOWED 21.6×10^3)
Maximum	8275 1.699E+04	7320 1.651E+03	2094 7.344E+02	8185 8.579E+03	8275 1.667E+04
Minimum	3499 -5.199E+02	3499 -1.231E+03	752 -1.628E+04	47 4.100E-01	47 7.486E-01
Average	2.750E+03	7.681E+00	-2.771E+03	2.760E+03	5.472E+03

DEFORMATION
1.220"

FEA MODEL WAS RESTRAINED ONE FOOT FROM EACH END (24.5' TOTAL). 4.0 TON VERTICAL DESIGN LOAD WITH AN ADDITIONAL 25% LOAD WAS APPLIED AT MID-SPAN ON THE LOWER FLANGE ON THE UPPER OUTER EDGE. ALSO A 10% HORIZONTAL LOAD WAS APPLIED AT MID-SPAN ON THE OUTER FLANGE.

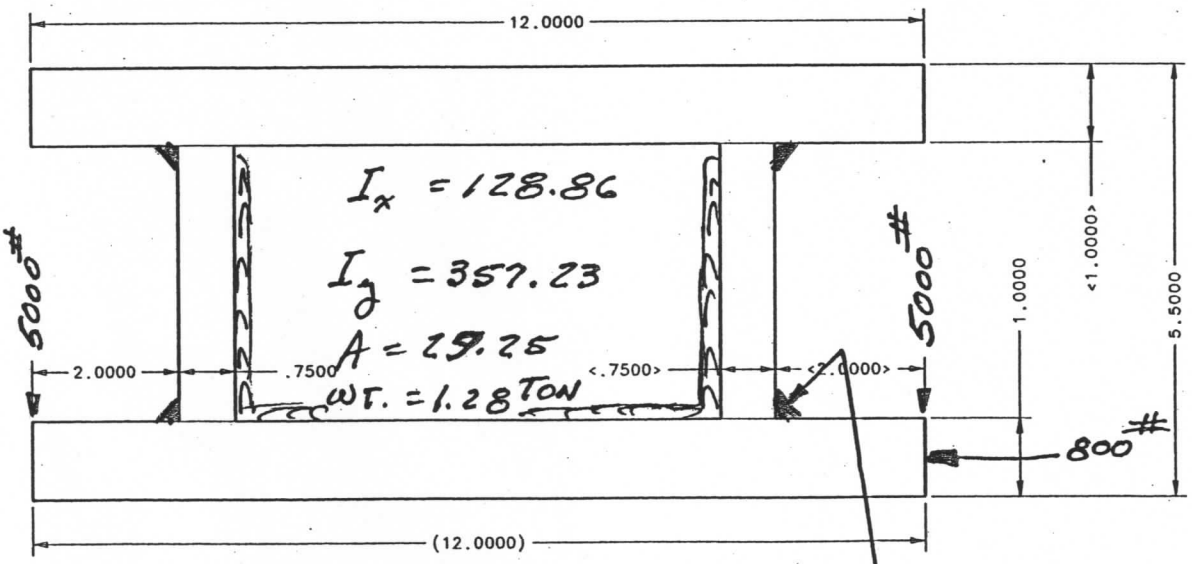

ALL MATERIAL
ASTM A36 STEEL

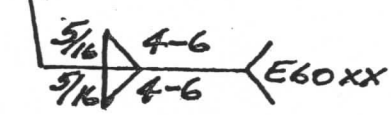

MIN. WELD SIZE, LENGTH AND SPACING REQ'D.
SEE Pg #2 FOR CALCS.

FERMILAB
ENGINEERING NOTE

SECTION	PROJECT	SERIAL-CATEGORY	PAGE
			5

SUBJECT: WELD SIZE REQUIREMENTS FOR GANTRY LOW PROFILE BEAM

NAME: E.M. Villegas

DATE: 6/1/04

REVISION DATE:

DESIGN FORCE ON FILLET WELD (#/IN)

$$f_w = \frac{VAy}{I_x n} \quad \text{where } V = 10\times10^3\,\#\ (\text{5 TON TEST LOAD})$$

$$A = 29.25\,\text{in}^2$$

$$= \underline{2.55\times10^3\ \#/\text{IN}} \qquad y = 2.25$$

$$I_x = 128.86$$

$$n = 2$$

ALLOWABLE FORCE ON FILLET WELD (#/IN)

$$F_w = \sin 45^\circ\, w\, F_v \quad \text{where } w = .312'' \ (\text{BASE ON THICKNESS})$$

$$= \underline{4.11\times10^3\ \#/\text{IN} > f_v} \qquad F_v = .3\times62\times10^3$$

$$= 18.6\times10^3\ \text{psi}^\circ\ (\text{E60XX})$$

ALLOWABLE FORCE ON UNIT WELD (#/IN)

$$F_w = \sin 45^\circ\, w\, F_v$$

$$= 13.15\times10^3\, w$$

$$\therefore\ w = \frac{2.55\times10^3}{13.15\times10^3}$$

$$= .194''\ \text{MIN LEG SIZE REQ'D.}$$

WELD SPACING REQ'D

$$\% = \frac{.194''}{.312}\times100 = 62.2\%\ \text{REQ'D.}$$

$$\% = \frac{l_w}{\text{℄ DIST}}\times100 = \frac{4''}{6''}\times100 = 66.7\%$$

$\therefore$

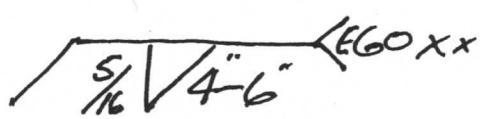

MIN. WELD REQUIREMENTS

/cadwhs/server04/ms_villegas/TAFT_HEADER_BEAM.mf1

ESULTS: 2- B.C. 1,STRESS_2,LOAD SET 1
TRESS - MAX SHEAR MIN: 4.10E-01 MAX: 8.58E+03
EFORMATION: 1- B.C. 1,DISPLACEMENT_1,LOAD SET 1
ISPLACEMENT - MAG MIN: 0.00E+00 MAX: 1.22E+00
RAME OF REF: PART

VALUE OPTION:ACTUAL

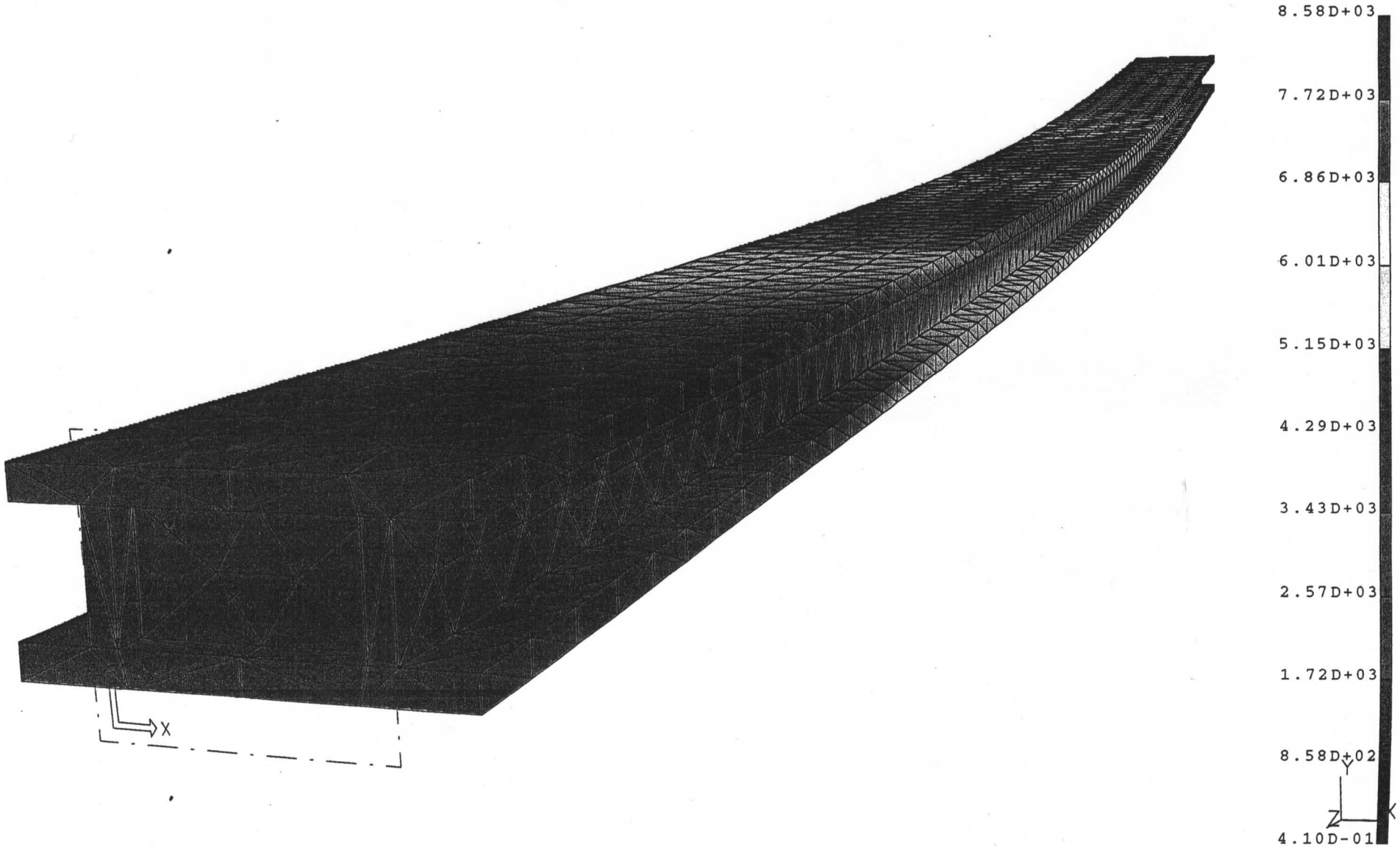

lotted by villegas on 22-Jul-04 , File: generic.pff

Pg #6

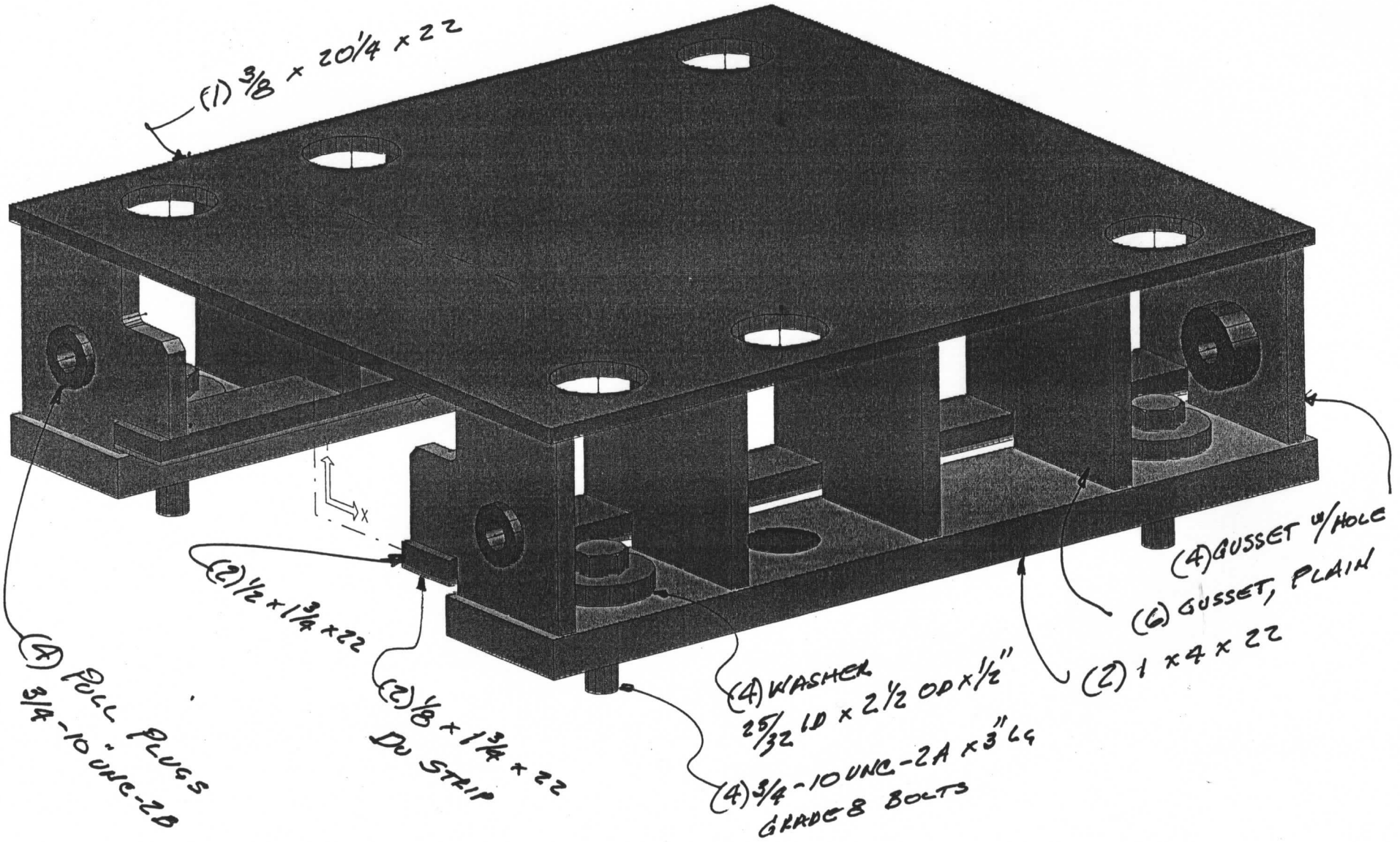

MAT'L A36. STEEL

LIFTER HEAD

Pg #7

I-DEAS 9 m3: Simulation 23-Jul-04 14:09:52
/cadwhs/server04/ms_villegas/TAFT_HEADER_BEAM.mf1
LIFTER_HEAD_FEA

Group ID : None
Result Set : 2 - B.C. 1,STRESS_2,LOAD SET 1
Report Type : Contour Units : IN
Result Type : STRESS
Frame of Reference: Part Data Component: Max Shear

	Max Prin	Mid Prin	Min Prin	Max Shear (Allowed 14×10^3)	Von Mises (Allowed 21.6×10^3)	Deformation
Maximum	16912 2.152E+04	30654 6.293E+03	17019 3.486E+03	16912 1.066E+04	16912 1.973E+04	0.012"
Minimum	3200 -5.758E+03	3199 -8.018E+03	31645 -1.415E+04	26468 3.797E+00	26468 6.795E+00	
Average	1.101E+03	3.924E+01	-8.551E+02	9.781E+02	1.791E+03	

RESTRAINTS & LOADS WERE APPLIED ON THE MODEL AS FOLLOWS:

A) RESTRAINTS WERE PLACED AROUND TWO INNER SUPPORTING HOLES.

B) A VERTICAL TEST LOAD OF 4 x 1.25 = 5 TON DIVIDED EQUALLY ON TWO EDGES THAT SIMULATED THE OUTER EDGES OF THE LOW PROFILE BEAM.

C) A TRAVERSED DRAG LOAD OF .75 x 5 = 3.75 TON APPLIED EQUALLY ON TWO 3/4-10 TAPPED HOLES.

FERMILAB
ENGINEERING NOTE

SECTION	PROJECT	SERIAL-CATEGORY	PAGE
			9

SUBJECT: WELD SIZE REQUIREMENTS FOR LIFTER HEAD

NAME: E.M. Villegas

DATE: 6/21/09

REVISION DATE:

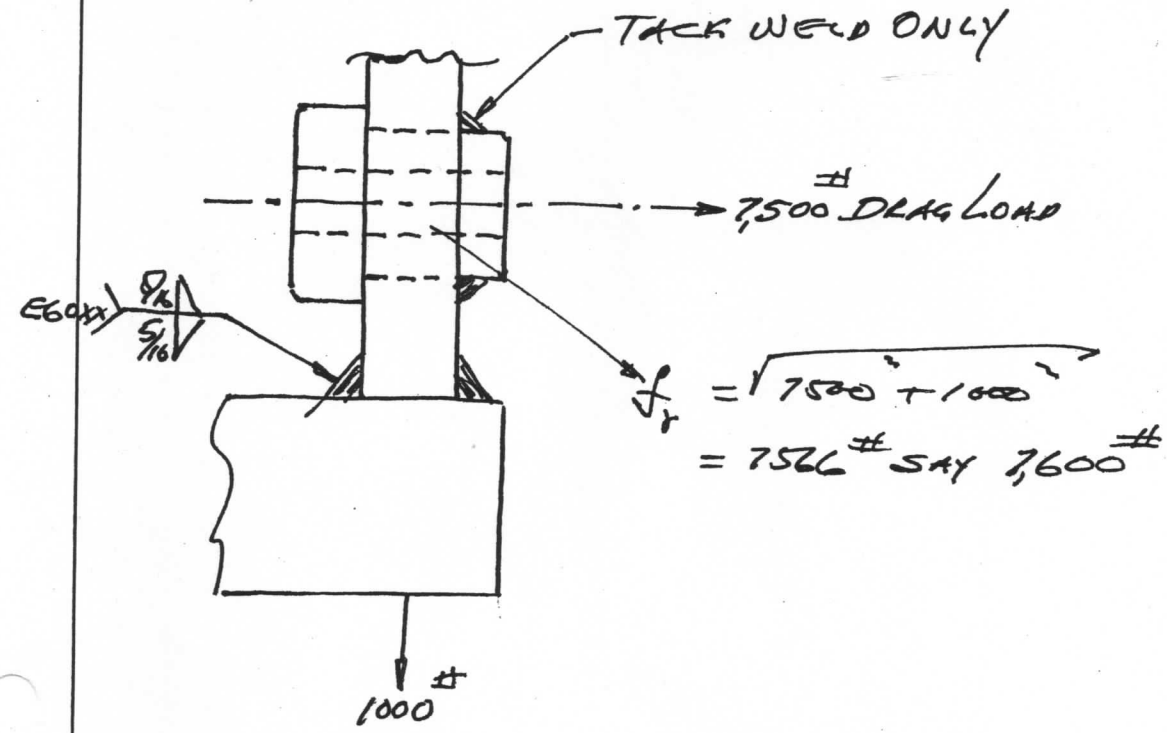

DESIGN FORCE ON FILLET WELD (#/IN)

$$f_w = \frac{7600^{\#}}{3.75''} = 2{,}027^{\#}/IN$$

ALLOWABLE FORCE ON 5/16 FILLET WELD (#/IN) SEE Pg #5

$$F_w = 4.11 \times 10^3 \ \#/IN$$

$\therefore F_w > f_w$ OK

/cadwhs/server04/ms_villegas/TAFT_HEADER_BEAM.mf1

RESULTS: 2- B.C. 1,STRESS_2,LOAD SET 1
STRESS - MAX SHEAR MIN: 3.80E+00 MAX: 1.07E+04
DEFORMATION: 1- B.C. 1,DISPLACEMENT_1,LOAD SET 1
DISPLACEMENT - MAG MIN: 0.00E+00 MAX: 1.24E-02
FRAME OF REF: PART

VALUE OPTION:ACTUAL

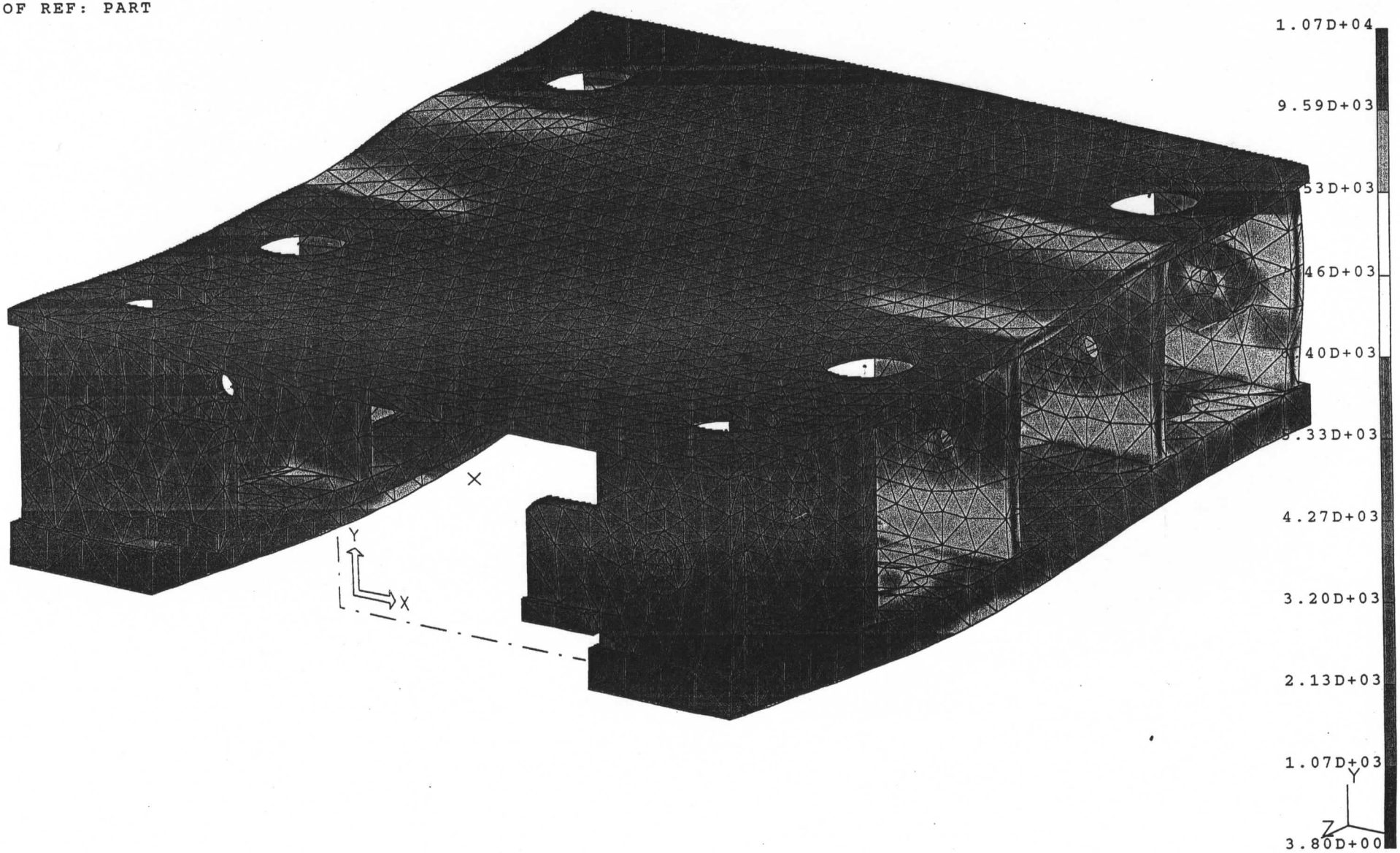

Plotted by vill on 23-Jul-04 , File: generic.pff

Pg #10

PURCHA[illegible] R[illegible]UISITION

Requisition

Requisition Number (Filled in by System)	Oracle Preparer (Filled in by System)	Date 6/17/04	Request Originator: E. M. VILLEGAS	Extension: 3686 MS: 219
Division/Section Approval		Date	NEPA Approval	
Business Office Approval		Date		
Directorate Approval		Date		

Requisition Header

Description (of entire requisition): ABSORBER LOW PROFILE GANTRY BEAM

Note to Approver:

Justification (To Approver):

Requisition Entry Defaults

Requester	Deliver-To-Location (not Mail Station)	Buyer Note (use attachments) (i.e., Previous PO)	
ERNIE VILLEGAS	MAB D. ERICKSON		

Suggested Vendor	Suggested Vendor Site	Suggested Vendor Contact	Suggested Vendor Telephone #
NAICO STEEL	WEST CHICAGO	JERRY SKILLEN	293-1900

Reference #	Need-By-Date	Project/Task/Expenditure Type and Expenditure Organization	
	6/24/04	200 1.1.4.3.2.2	UID 73336

Note to Receiver:

Total of Requisition: 2,204 88

Requisition Lines

Line #	Line Type	PO Line Category	Description (Start with a Noun) (240 Characters Maximum, Enter Additional Description in Cell Below Line Item)	Quantity, Unit of Measure and Price		Project Information		Split Coding Qty's
1			A36 STEEL 1" x 12" x 228" UN Number / Hazard Class	Quantity	2	Project	200	
				Unit of Measure	EA.	Task	1.1.4.3.2.2	
				Price per Unit	615 51	Exp. Type		
				Extended Price	1231 02	Exp. Org.		
2			A36 STEEL 1" x 12" x 78" UN Number / Hazard Class	Quantity	2	Project	200	
				Unit of Measure	EA.	Task	1.1.4.3.2.2	
				Price per Unit	219 21	Exp. Type		
				Extended Price	438 42	Exp. Org.		
3			A36 STEEL 3/4" x 3 1/2" x 120" UN Number / Hazard Class	Quantity	4	Project	200	
				Unit of Measure	EA.	Task	1.1.4.3.2.2	
				Price per Unit	57 88	Exp. Type		
				Extended Price	231 36	Exp. Org.		

PURCHASE REQUISITION

Requisition

Requisition Number (Filled in by System)	Oracle Preparer (Filled in by System)	Date 6/17/04	Request Originator: E. M. VILLEGAS	Extension: 3686 MS: 219
Division/Section Approval		Date	NEPA Approval	
Business Office Approval		Date		
Directorate Approval		Date		

Requisition Header

Description (of entire requisition): ABSORBER LOW PROFILE GANTRY BEAM

Note to Approver:

Justification (To Approver):

Requisition Entry Defaults

Requester	Deliver-To-Location (not Mail Station)	Buyer Note (use attachments) (i.e., Previous PO)	
ERNIE VILLEGAS	MRB D. ERICKSON		
Suggested Vendor: NAPCO STEEL	Suggested Vendor Site: WEST CHICAGO	Suggested Vendor Contact: CRAY SKILLEN	Suggested Vendor Telephone #: 293-1900
Reference #:	Need-By-Date: 6/24/04	Project/Task/Expenditure Type and Expenditure Organization: 200 1.1.4.3.2.2 UID 73336	
Note to Receiver:			Total of Requisition:

Requisition Lines

Line #	Line Type	PO Line Category	Description (Start with a Noun) (240 Characters Maximum, Enter Additional Description in Cell Below Line Item)	Quantity, Unit of Measure and Price		Project Information		Split Coding Qty's
1			A36 STEEL 3/8" x 20 1/4" x 22" UN Number / Hazard Class	Quantity	1	Project	200	
				Unit of Measure	EA.	Task	1.1.4.3.2.2	
				Price per Unit	79 76	Exp. Type		
				Extended Price	79 76	Exp. Org.		
2			A36 STEEL 1/2" x 2" x 22" UN Number / Hazard Class	Quantity	2	Project	200	
				Unit of Measure	EA.	Task	1.1.4.3.2.2	
				Price per Unit	15 77	Exp. Type		
				Extended Price	31 54	Exp. Org.		
3			A36 STEEL 1/2" x 5" x 6" UN Number / Hazard Class	Quantity	10	Project	200	
				Unit of Measure	EA	Task	1.1.4.3.2.2	
				Price per Unit	4 55	Exp. Type		
				Extended Price	45 50	Exp. Org.		

293 - 1500

Bill of Materials for

Name: GANTRY_LOW_PROFILE_BEAM_ASSY
Type: ASSEMBLY
Part #:
Version: 0
Revision:
Description:

Date: 17/06/2004

Qty	Name	Part #
1	LOW_PROFILE_BEAM_WELMENT	
(2)	FLAT_BAR_1x12x228 — 615 51/64	
(2)	FLAT_BAR_1x12x78 — 219 21	
(4)	FLAT_BAR_750x3_500x120 — 57 89	
(2)	FLAT_BAR_750x3_500x66 — 35 63	
(6)	FLAT_BAR_750x3_500x6_500 — 4 77	
1	LIFTER_HEAD	
2	LIFTER_PLATE — (2) 1 x 4 x 22 — 23 69	
1	LIFTER_TENSION_PLATE — (1) 3/8 x 20 1/4 x 22 — 79 26	
2	DU_BEARING_SUPPORT — (2) 1/2 x 2 x 22 — 15 27	
10	GUSSET — (10) 1/2 x 5 x 6 — 4 55	
4	WASHER_781IDx2_50ODx50	
4	HEX_HD_BOLT_750-10UNCx31g	
2	DU_STRIP	

3-4 DAY

1/2 x 5 x 6