End Cap Calorimeter

Inner Hadronic Module Installation

by

H. J. Stredde
October 11, 1990

The Inner Hadronic (I.H.) Module is the central module of the End Calorimeters. (E.C.) It is cylindrical in shape, 67" long x 68" diameter, and weighs approximately 32 tons. The I.H. is installed in the E.C. after the lower halves of the Outer Hadronic (O.H.) and Middle Hadronic (M.H.) have been installed.

The I.H. presents a need for special handling due to its weight (32 tons) vs. the clean room crane capacity (30 tons). Since the clean room crane can not handle the I.H., all lifts must be made with the 50 ton building crane. In order to do this, part of the clean room roof must be removed to access the appropriate area.

With this restraint in mind, the following design was developed. Basically, an 'A' Frame gantry will be built. The gantry will consist of two tripods and a connecting beam. The tripods are positioned at each end of the E.C. (North - South) with additional space between the South tripod and the E.C. assembly. This space is required for I.H. The connecting beam is threaded through the E.C. and fastened to the tripods with bolts.

The I.H. is brought into the clean room with a transfer cart (not included in this design, currently in use at I.B.4) and the building crane. The I.H. will be positioned as close to the gantry as practical (East - West). A lifting frame will be attached to the transfer cart and the I.H. assembly will be raised to the gantry beam. The I.H. will be suspended from the gantry beam using link plates. The roof panel will now be closed and the installation of the I.H. into the E.C. will begin.

The E.C. assembly will be moved south until it encompasses the I.H., then the E.C. assembly including the transporter will be raised, using the transporter jacking system until the E.C. makes contact with the I.H. module and the I.H. load is transferred from the gantry to the E.C. assembly. When this is done, the link plates will be removed and the E.C. assembly with I.H. will be lowered to the floor. The E.C. assembly will be moved back to its original location and the gantry will then be disassembled and removed.

Attached to this note are appropriate engineering calculations and a Finite Element Analysis report developed by Kay Weber of the Accelerator Mechanical Support Group.

FERMILAB
ENGINEERING NOTE

SECTION	PROJECT	SERIAL-CATEGORY	PAGE
			1/16

SUBJECT: I. H. INSTALLATION BEAM TRIPOD

NAME: H. J. STREDDE

DATE: 8/2/90

REVISION DATE:

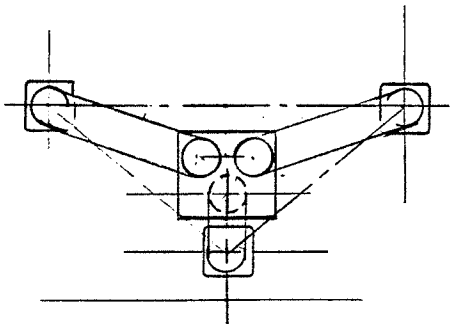

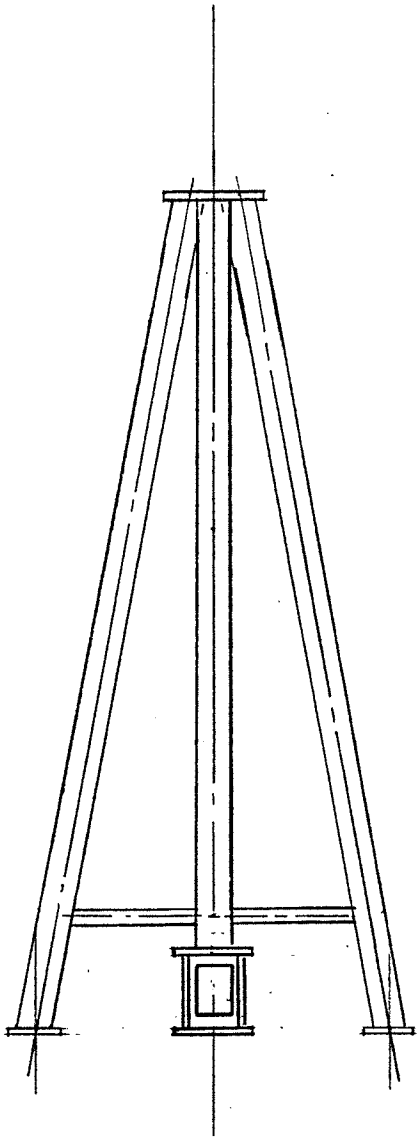

FERMILAB
ENGINEERING NOTE

SECTION	PROJECT	SERIAL-CATEGORY	PAGE
			2/16

SUBJECT: I. H. INSTALLATION BEAM-TRIPOD

NAME: H. J. STREDDE

DATE: 8-2-90 REVISION DATE: 1-7-91

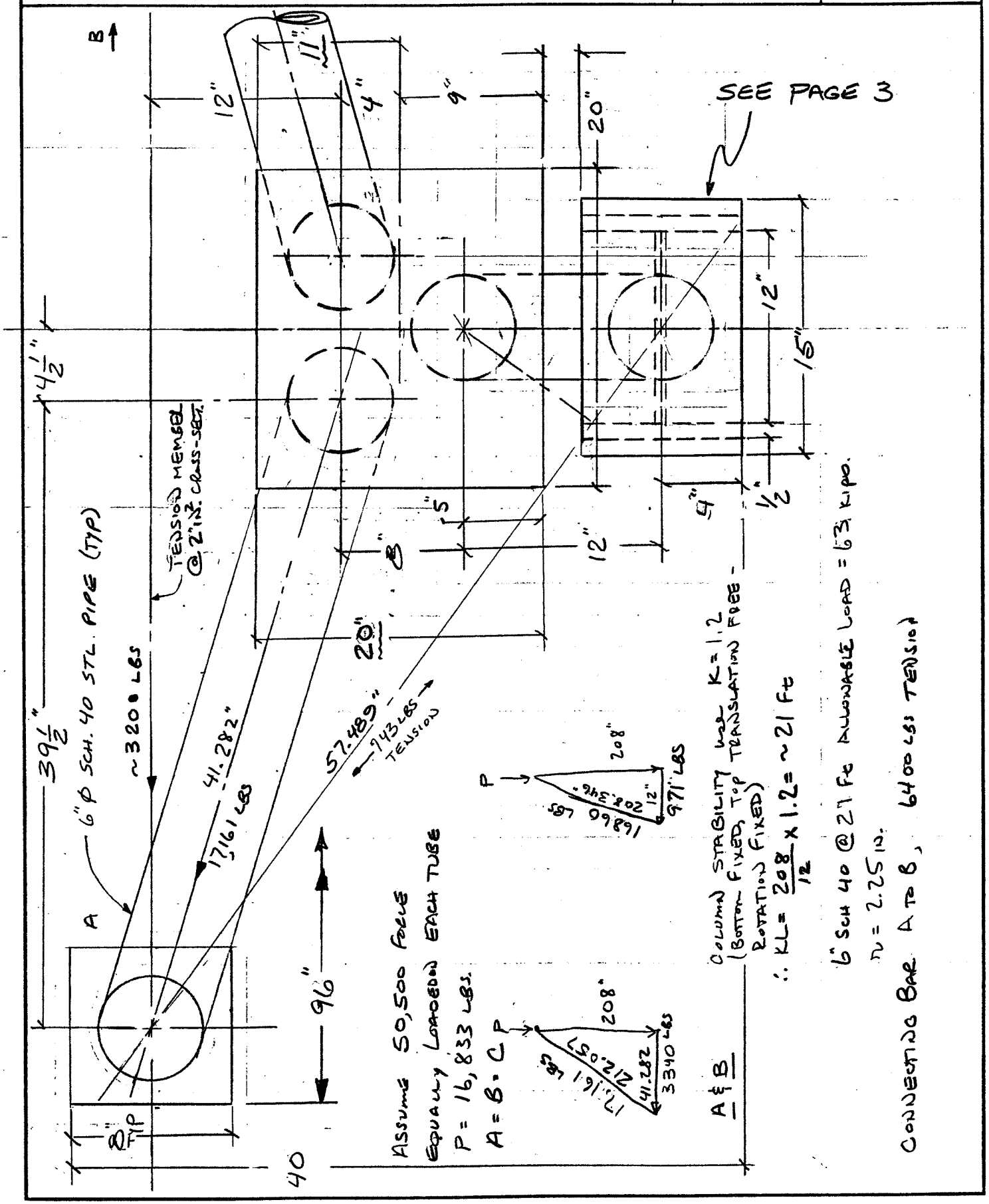

ASSUME 50,500 FORCE EQUALLY LOADED EACH TUBE

P = 16,833 LBS.

A = B = CP

COLUMN STABILITY USE K = 1.2 (BOTTOM FIXED, TOP TRANSLATION FREE - ROTATION FIXED)

∴ $KL = \frac{208}{12} \times 1.2 = \sim 21$ Ft

6" SCH 40 @ 21 Ft ALLOWABLE LOAD = 63 KIPS.

$r = 2.25$ IN.

CONNECTING BAR A TO B, 6400 LBS TENSION

SUBJECT: I. H. TRIPOD SUPPORT - LEG FORCES

NAME: H. J. STREDDE

DATE: 8/28/90 REVISION DATE: 9-13-90

ASSUME FORCE ON TRIPOD IS 50,500, EQUALLY DISTRIBUTED ON EACH LEG.

THEN $F_y = 16833$ LBS

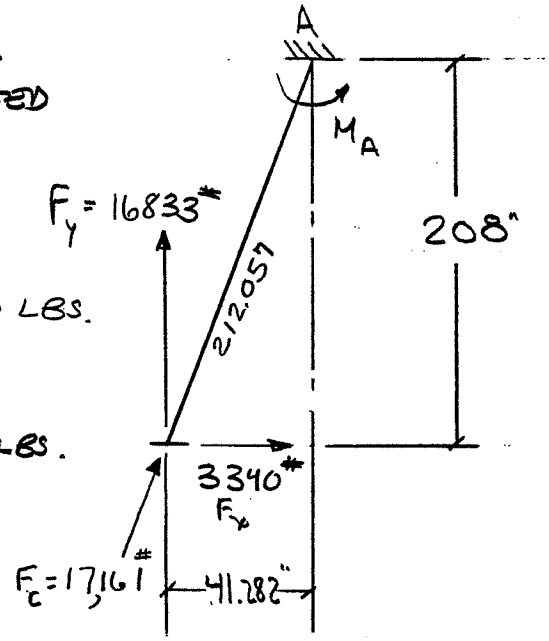

$$F_x = \frac{41.282}{208} \times 16833 = \underline{3340} \text{ LBS.}$$

$$F_c = \frac{212.057}{208} \times 16833 = \underline{17,161} \text{ LBS.}$$

$$\overset{+}{\curvearrowright} \Sigma M_A = 16833 \times 41.282 - 3340 \times 208$$
$$= 180 \text{ IN-LBS}$$

ASSUME: Top → FIXED
Bottom → TRANLATION FREE, ROTATION FIXED } $K = 1.2$, $F_y = 36$ KSI

THEREFORE $KL = \frac{1.2 \times 212''}{12} = \underline{21.2} \Rightarrow$ ALLOWABLE LOAD ON 6" SCH. 40 = 62 KIPS

FROM TABLE C-36, Pg 3-16 9TH EDITION AISC:

$$\frac{KL}{r} = \frac{1.2 \times 212''}{2.25} = 113.07 \; ; \quad F_a = 11,120 \text{ psi ALLOWABLE STRESS}$$

$$F_a = \frac{P}{A} + \frac{Mc}{I}$$

$C = 3.312''$
$I = 28.1 \text{ in}^4$
$A = 5.58 \text{ in}^2$

ECCENTRICITY OF RADIUS OF PIPE

$M = Pe$
$= 17161 \times \frac{6.625}{2}$

$$11,120 \geq \frac{17161}{5.58} + \frac{\overbrace{17161 \times 3.312}^{M} \times 3.312}{28.1}$$

$11,120^{psi} > 9,774 \text{ psi} \rightarrow$ 6" SCH 40 PIPE IS SAFE!

FERMILAB
ENGINEERING NOTE

SECTION	PROJECT	SERIAL-CATEGORY	PAGE
			4/16

SUBJECT: I. H. INSTALLATION BEAM - TRIPOD

NAME: H. J. STREDDE

DATE: 8-7-90

REVISION DATE:

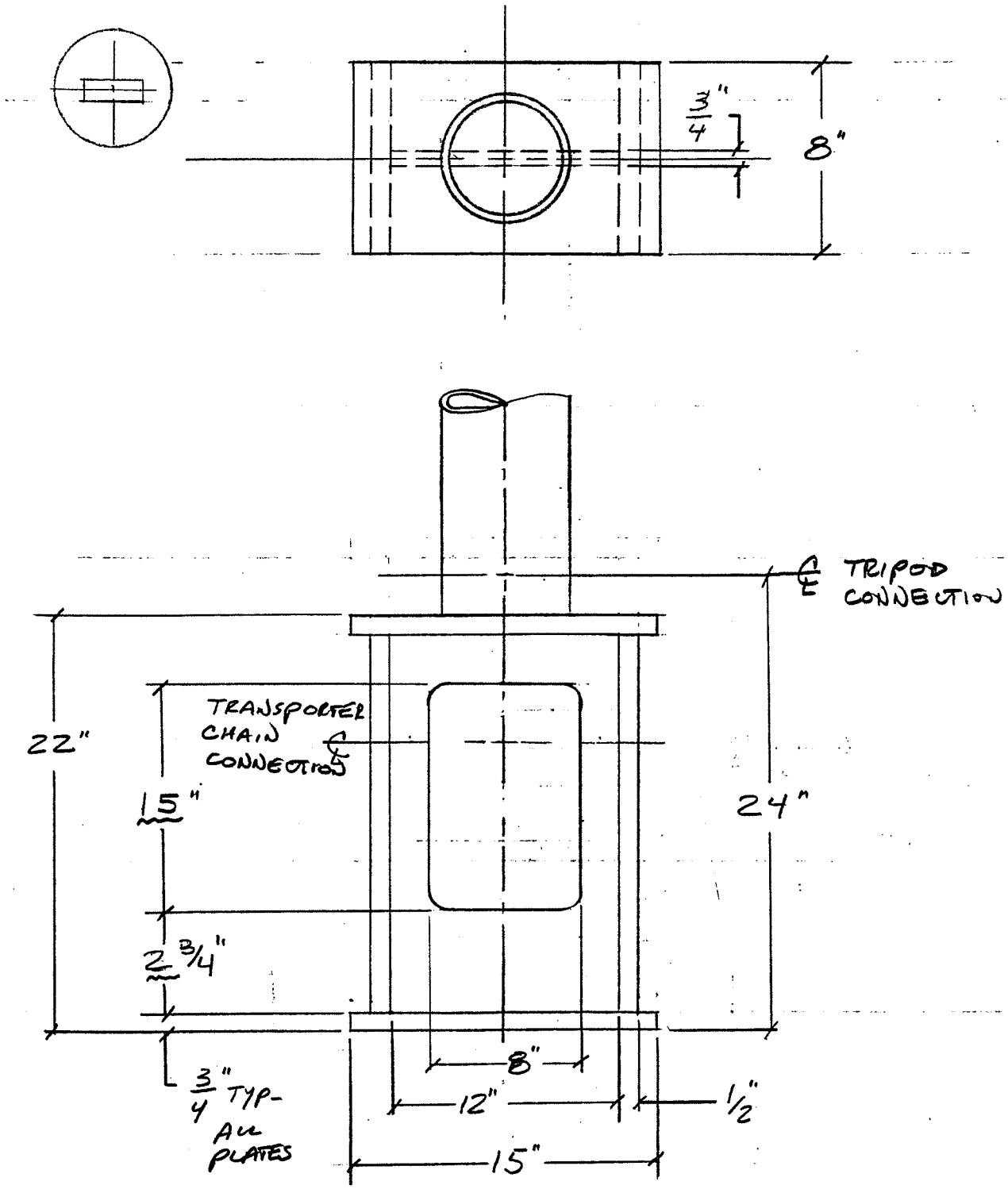

FERMILAB
ENGINEERING NOTE

SECTION	PROJECT	SERIAL-CATEGORY	PAGE
			5/16

SUBJECT: I.H. INSTALLATION BEAM SUPPORT TRIPOD TO BEAM CONNECTION

NAME: H. J. STREDDE

DATE: 8/7/90

REVISION DATE:

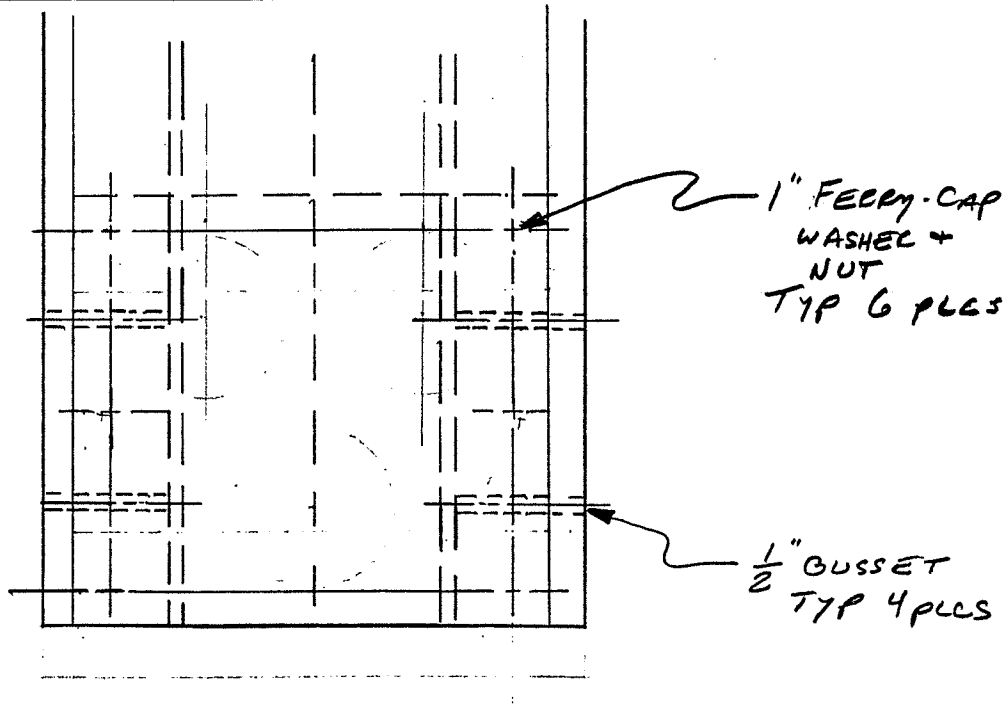

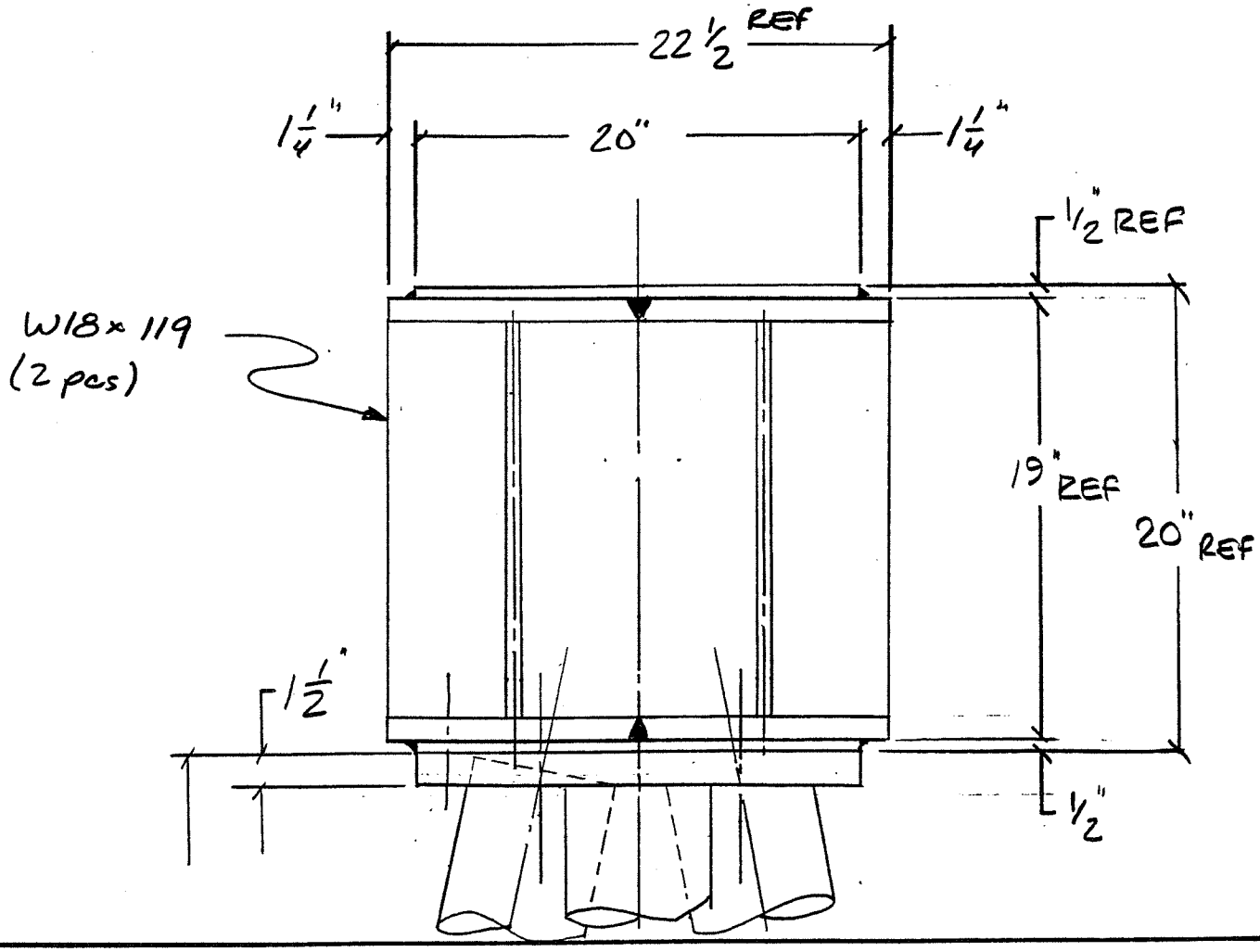

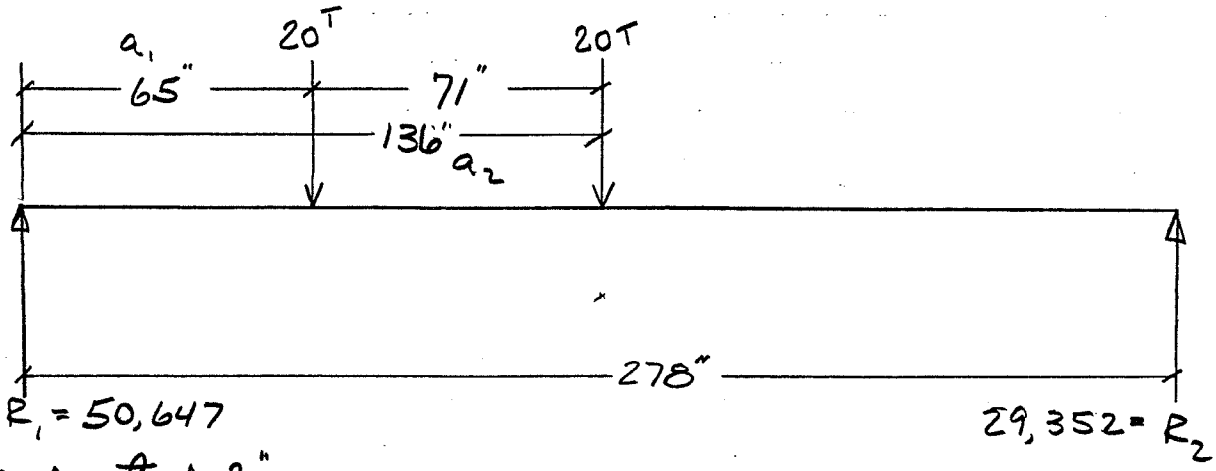

SET Δ at 0.2"

$$\Delta_E = \frac{Pa_1}{48EI}\left(3L^2-4a_1^2\right) + \frac{Pa_2}{48EI}\left(3L^2-4a_2^2\right)$$

$$= \frac{P}{48EI}\left[a_1\left(3L^2-4a_1^2\right) + a_2\left(3L^2-4a_2^2\right)\right].$$

$$I = \frac{20\times 2000}{48\times 29\times 10^6\times .2}\left[65\left(3\times 278^2-4\times 65^2\right)+136\left(3\times 278^2-4\times 136^2\right)\right]$$

$$= 5,092 \text{ IN}^4.$$

NOT AVAILABLE / central Steel 8/1/90 or ANYWHERE ELSE

use 2, W18 × ~~143~~ SEAM WELDED ; $I = 5500 \text{ IN}^4$, $S = 564 \text{ IN}^3$

use 2, W18 × 119 w/ ½ CAP PLATES ; $I = 6280 \text{ IN}^4$, $S = 628 \text{ IN}^3$

$$R_2 = \frac{65\times 40000 + 136\times 40000}{278} = 29,352 \text{ LBS}$$

$$R_1 = 80000 - 29,352 = 50,647 \text{ LBS}$$

$$M_{max} = 4.17\times 10^6 \text{ LB-INS.}$$

$$S = \frac{4.17\times 10^6}{628} = 6,637 \text{ psi}$$

$$\text{WEB SHEAR} = \frac{40000}{2(19\times .655)} = 1608 \text{ psi}$$

FERMILAB
ENGINEERING NOTE

SECTION	PROJECT	SERIAL-CATEGORY	PAGE
			7/16

SUBJECT: I. H. HANGER BLOCK & LINKS SIDE VIEW

NAME: H. J. STREDDE

DATE: 9/10/90

REVISION DATE:

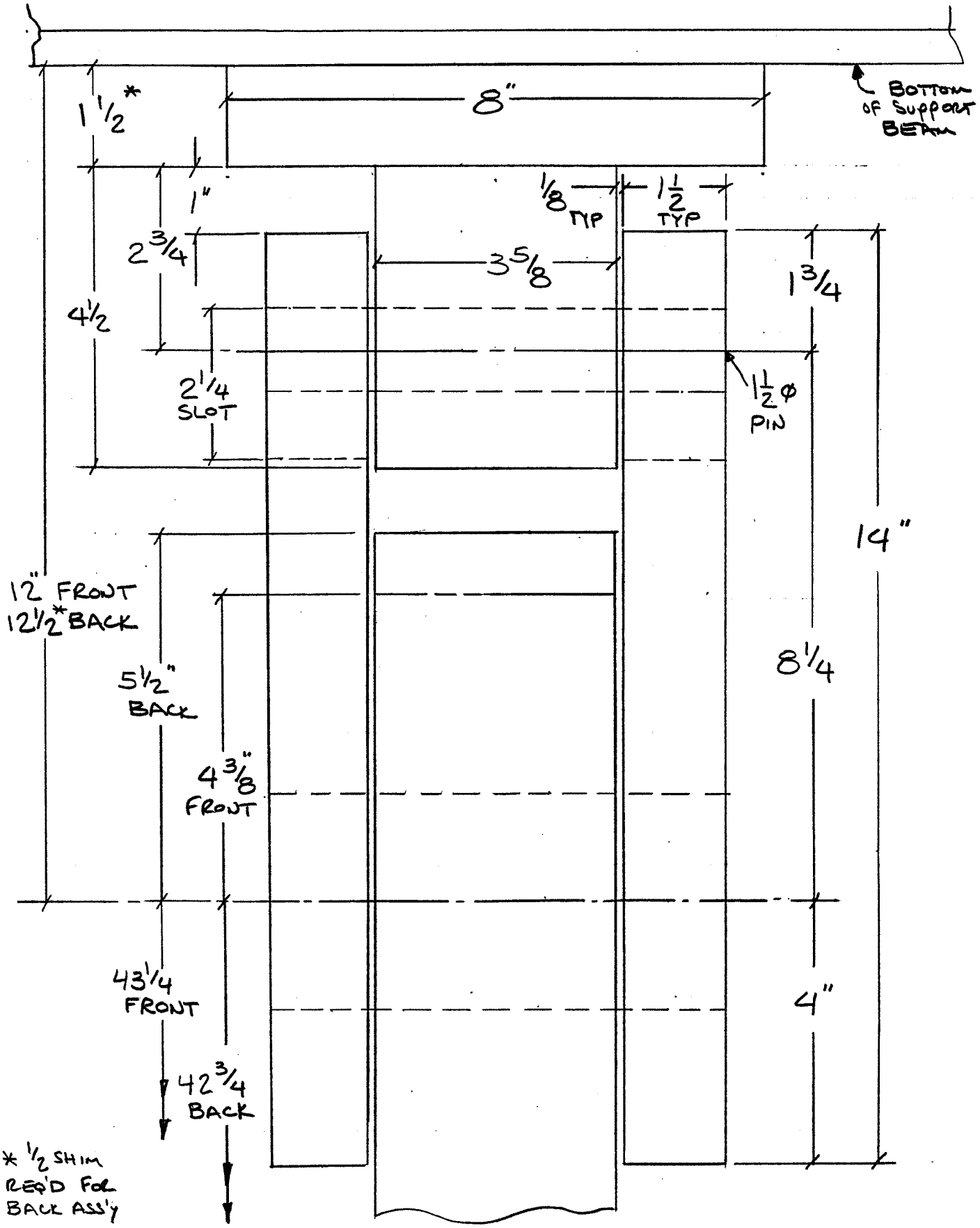

FERMILAB
ENGINEERING NOTE

SECTION	PROJECT	SERIAL-CATEGORY	PAGE
			8/16

SUBJECT: I.H. HANGER LINKS

NAME: H. J. STREDDE

DATE: 9-10-90

REVISION DATE:

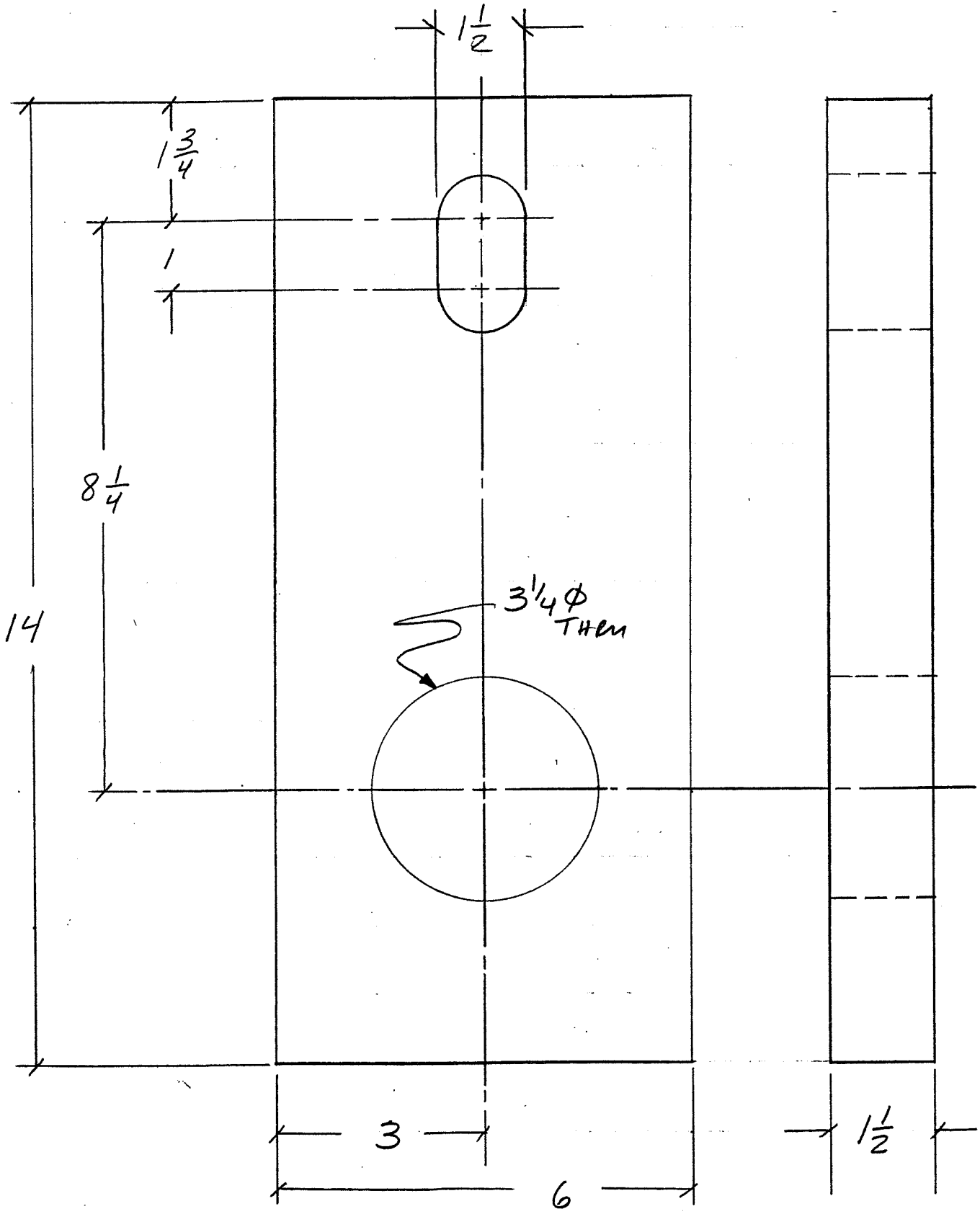

SUBJECT: I.H. LINK STRESSES

NAME: H. J. STREDDE

DATE: 9-11-90 REVISION DATE: 10-19-90

$1\frac{1}{2}\phi$ PIN

TEAR-OUT:

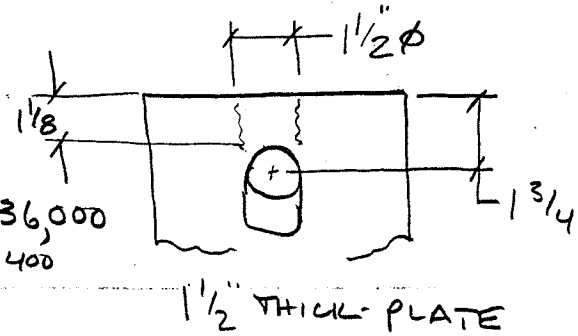

$$S_s = \frac{20000}{12 \times 1\frac{1}{8} \times 1\frac{1}{2}} = 5{,}926 \text{ psi} < .4 \times 36{,}000 \quad 14{,}400$$

BRG-PIN ON LINK:

$$S_B = \frac{20000}{1\frac{1}{2} \times 1\frac{1}{2}} = 8{,}888 \text{ psi} < .95 \times 36{,}000 \quad 34{,}200$$

SHEAR ON PIN

$$\sigma = \frac{20000}{2 \times (1.5)^2 \times .785} = 5{,}662 \text{ psi} < .4 \times 100000 \quad 40{,}000$$

3" φ PIN

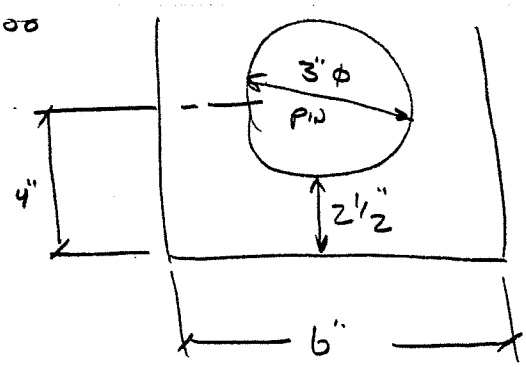

TEAR OUT

$$S_s = \frac{20000}{2 \times 2\frac{1}{2} \times 1\frac{1}{2}} = 2{,}666 \text{ psi} < .4 \times 36{,}000 \quad 14{,}400$$

BRG - PIN ON LINK

$$S_B = \frac{20000}{3 \times 1\frac{1}{2}} = 4{,}444 \text{ psi} < .95 \times 36000 \quad 34{,}200$$

BENDING STRESS ON $1\frac{1}{2}$" φ PIN (STRESS PROOF)

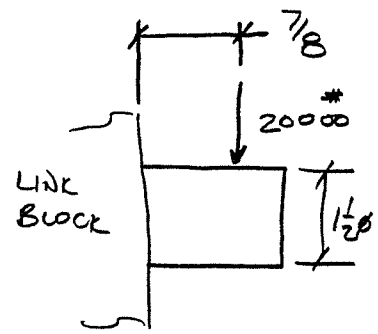

$$S_B = \frac{20000 \times .875 \times 4}{\pi \times .75^3}$$

$$= 52{,}816 \text{ psi} < .6 \times 100{,}000 \quad 60{,}000$$

FERMILAB
ENGINEERING NOTE

SECTION	PROJECT	SERIAL-CATEGORY	PAGE
			10/16

SUBJECT: I. H. HANGER BLOCK & LINKS FRONT VIEW

NAME: H. J. STREDDE

DATE: 9-10-90

REVISION DATE:

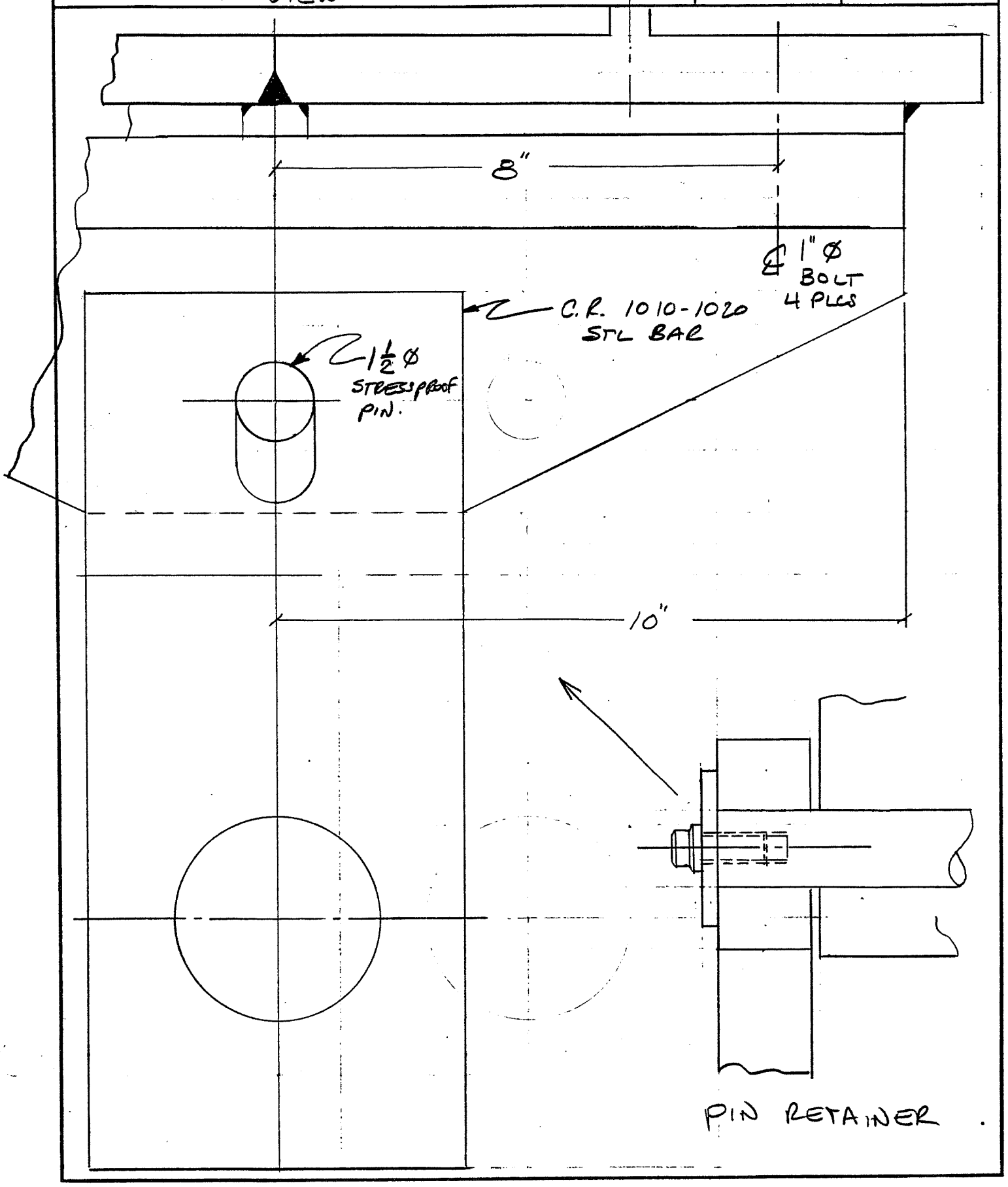

FERMILAB
ENGINEERING NOTE

SECTION	PROJECT	SERIAL-CATEGORY	PAGE
			11/16

SUBJECT: I.H. HANGER BLOCK BOTTOM VIEW

NAME: H.J. STREDDE

DATE: 9-11-90

REVISION DATE:

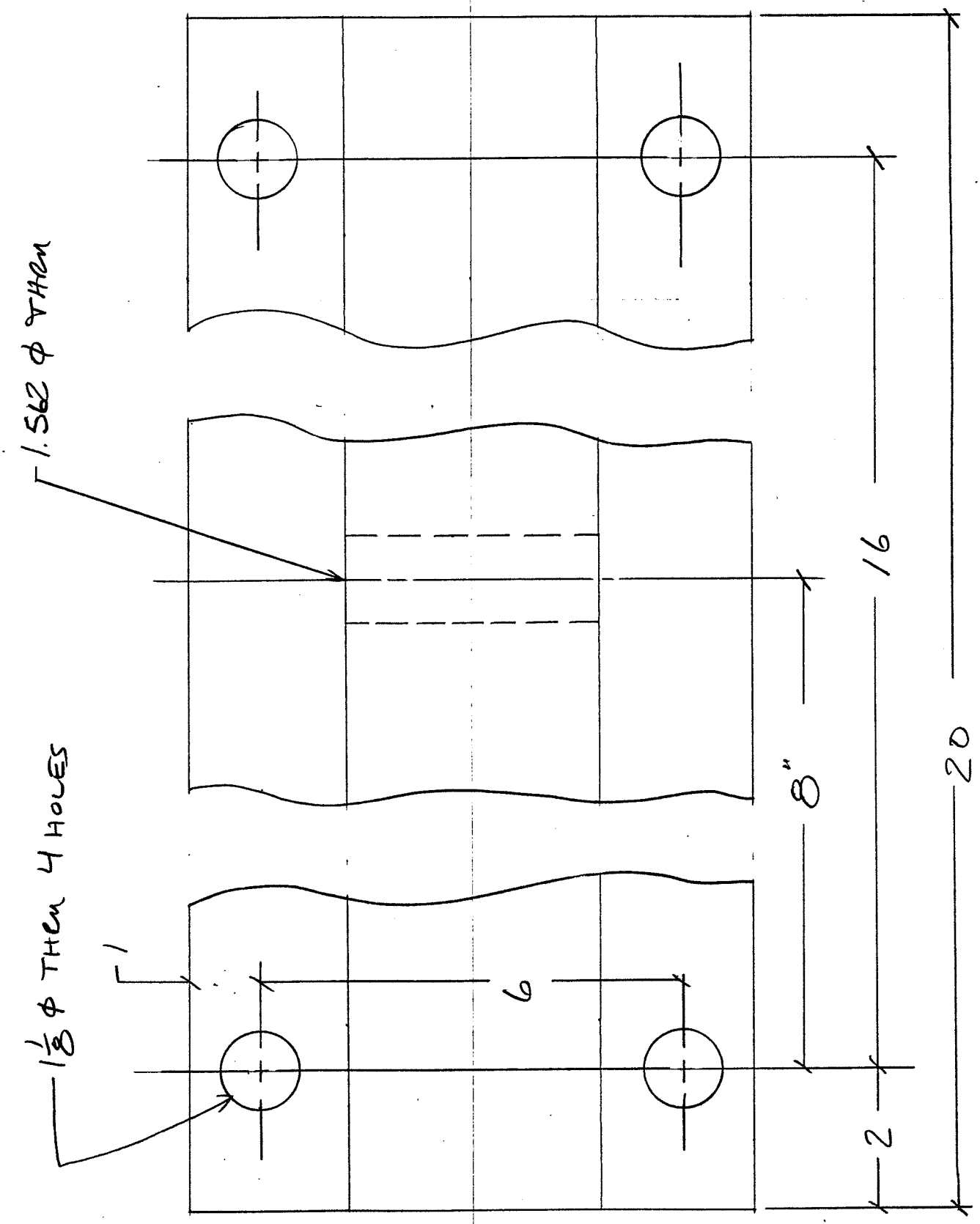

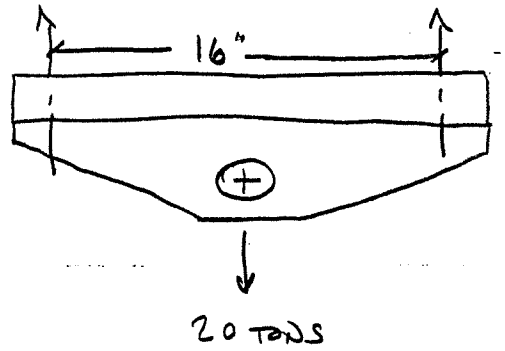

LET $\Delta = .015$

$$\Delta = \frac{Pl^3}{48EI}$$

THEN $I = \dfrac{PL^3}{48E\Delta}$.

$P = 20 \times 2000$ LBS
$L = 16$ IN
$E = 29 \times 10^6$ psi
$\Delta = 0.015$ IN.

$$I = \frac{20 \times 2000 \times 16^3}{48 \times 29 \times 10^6 \times 0.015} = 78.467 \text{ IN}^4.$$

Actual I is 74.5 IN^4

$$\Delta = \frac{20 \times 2000 \times 16^3}{48 \times 29 \times 10^6 \times 74.5} = \underline{\underline{0.016''}} \downarrow$$

ASSUME $1\frac{1}{2} \times 16$ PLATE REACTS TO LOAD

THEN $I = \frac{1}{12}\left(1\frac{1}{2}\right)^3(16)$
$= 4.5$ IN^4.

$$\Delta = \frac{20 \times 2000 \times 6^3}{48 \times 29 \times 10^6 \times 4.5} = \underline{\underline{0.0014''}} \downarrow$$

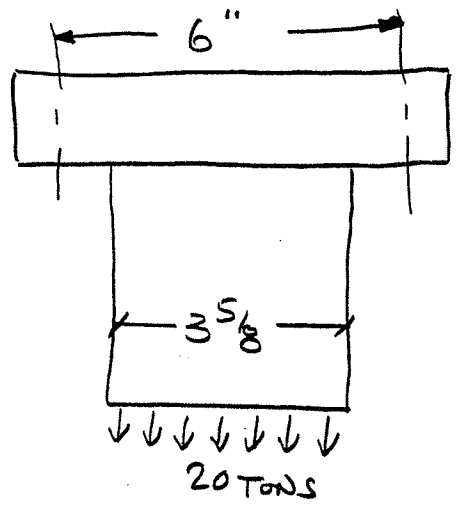

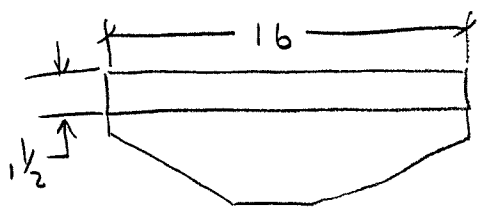

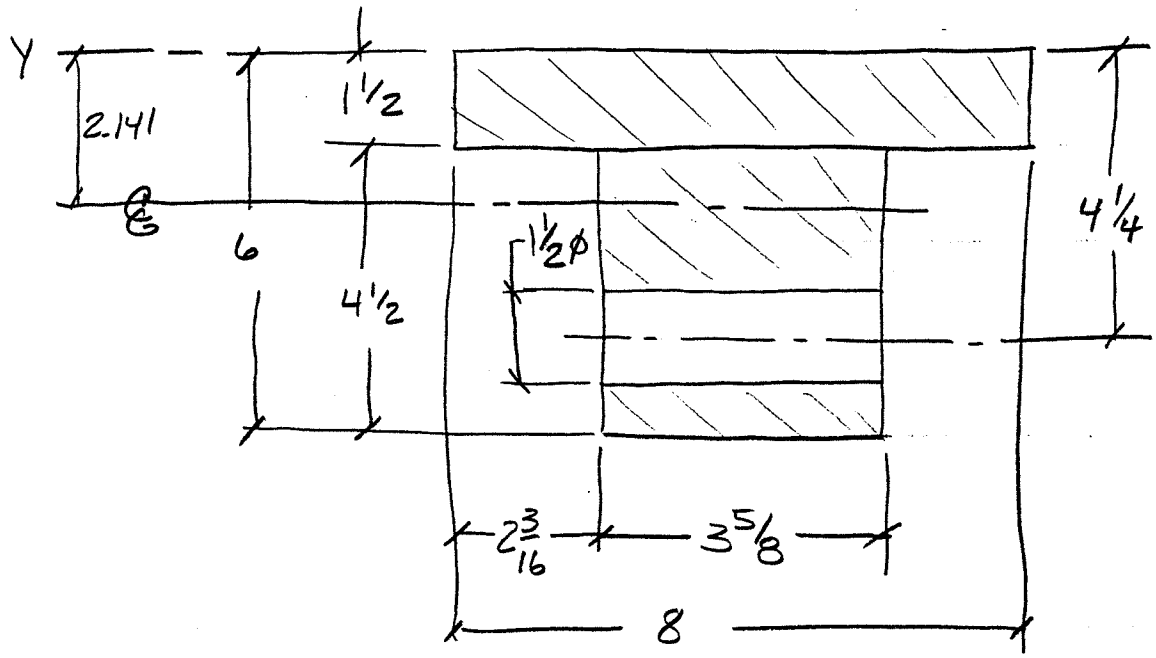

$$\bar{Y} = \frac{\Sigma A y}{\Sigma A} = \frac{(1.5)(8)(.75) + (4.5)(3.625)(3.75) - (1.50)(3.625)(4.25)}{(1.5)(8) + (4.5)(3.625) - (1.50)(3.625)}$$

$$= 2.057''$$

$$I = I_o + Ad^2$$

$$= \left[\frac{1}{12}(1.5^3 \times 8) + (1.5 \times 8)(1.307)^2\right] + \left[\frac{1}{12}(4.5^3 \times 3.625) + (4.5 \times 3.625)(1.693)^2\right]$$

$$- \left[\frac{(1\tfrac{1}{2})^3(3.625)}{12} + (1.50 \times 3.625)(2.193)^2\right].$$

$$= 20.780 + 74.283 - 27.170$$

$$I = 67.893 \text{ in}^4$$

$$Z_T = \frac{67.893}{2.057} = 33.005 \text{ in}^3$$

$$Z_B = \frac{67.893}{6 - 2.057} = 17.219 \text{ in}^3$$

$$S = \frac{Mc}{Z} = \frac{PL}{4Z} = \frac{40000 \times 16}{4 \times 17.219} = 9{,}292 \text{ psi}$$

W 18 x 119

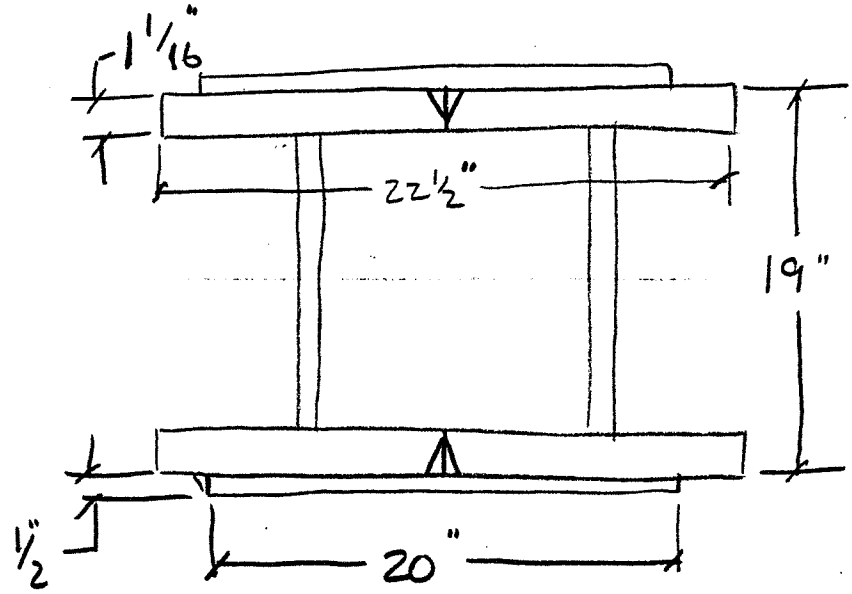

$V = 52000$ LBS

$I = 2 \times 2190 = 4380$ IN^4.

$a = .5 \times 20 = 10$ IN^2.

$y = \frac{19}{2} + 1/4 = 9.75$ IN.

$$f_h = \frac{Vay}{In} = \frac{52000 \times 10 \times 9.75}{4380 \times 2} = 579 \text{ LBS/IN}$$

$$w = \frac{\text{actual}}{\text{allowable}} = \frac{579}{14850} = .039''$$

use 1/4 weld, then $\frac{.039}{.250} = 15\%$

USE 1/4 2-8 E 7018

SPLICE weld

$$f_h = \frac{52000 \times 22.5 \times 1.062 \times 8.969}{4380} = 2544 \text{ LBS/IN.}$$

$$w = \frac{2544}{14850} = 0.171 \longrightarrow$$

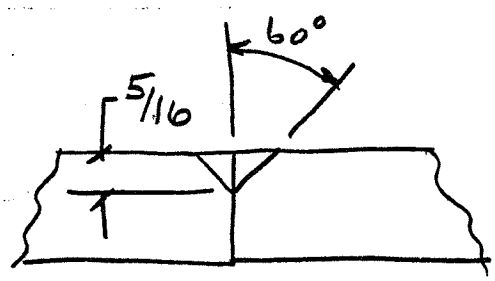

SUBJECT: I.H. LINK BLOCK - WELD & FASTENER SIZE

NAME: H.J. STREDDE

DATE: 9-14-90 | REVISION DATE:

WELD SIZE BLOCK A TO B:

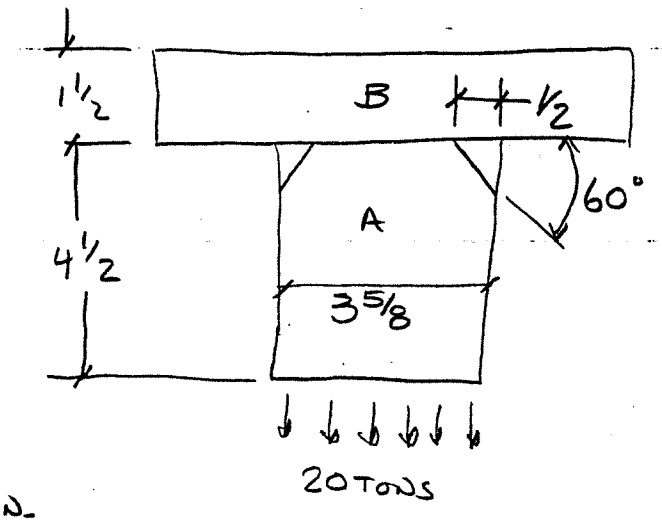

ALLOWABLE LENGTH of WELD

$L_w = 2 \times 16$

$= 32''$

$$\text{Force } \#/\text{in} = \frac{20 \times 2000}{32} = 1250\ \#/\text{in.}$$

$$w = \frac{1250}{14850} = .084''$$

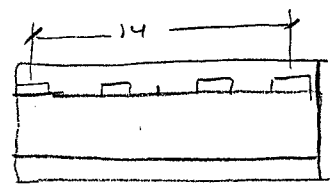

MIN. weld SIZE SHOULD BE ~ 1/2

$$\frac{.084}{.500} = 17\% \quad \text{use}$$

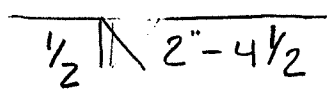

FASTENER - LINK BLOCK TO BEAM

$P = 40000$ LBS.

$N = 4$, NUMBER OF BOLTS

$$\text{LOAD PER BOLT} = \frac{40000}{4} = 10000 \text{ LBS} = 10 \text{ KIPS}$$

ASSUME 1" ϕ BOLTS, PROOF STRENGTH = 78 Kpsi (REF: MECH. ENGR DES. BY SHIGLEY 3RD EDITION)

TENSILE STRESS AREA = $0.606\ \text{IN}^2$

PROOF LOAD = $78 \times .606 = 47.3$ Kips.

FERMILAB
ENGINEERING NOTE

SECTION	PROJECT	SERIAL-CATEGORY	PAGE
			16/16

SUBJECT: I.H. INSTALLATION BEAM CLEARANCE TO COOLING LOOPS

NAME: H. STREDDE

DATE: 9-11-90

REVISION DATE:

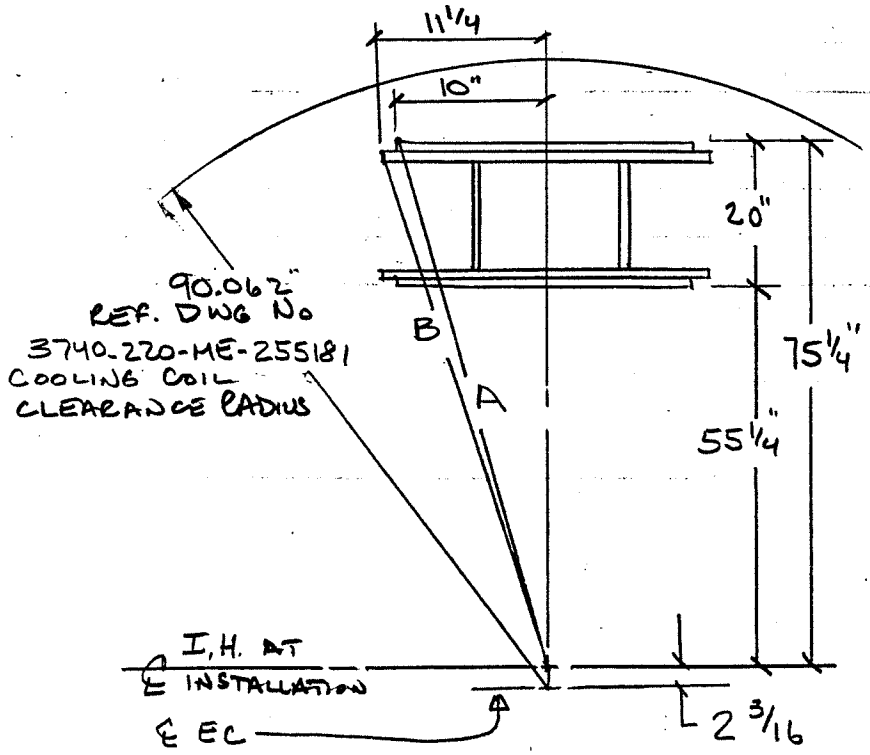

$$A = \left[(10)^2 + (75\tfrac{1}{4})^2\right]^{1/2} = 75.912 < 90.062 - 2.188 = 87.874''$$

~12" CLEARANCE

$$B = \left[(11\tfrac{1}{4})^2 + (75\tfrac{1}{4})^2\right]^{1/2} = 76.086 < 90.062 - 2.188 = 87.874$$

~11 7/8" CLEARANCE.

FERMILAB
ENGINEERING NOTE

SECTION	PROJECT	SERIAL-CATEGORY	PAGE

SUBJECT: FASTENER SIZE: BEAM TO TRIPOD

NAME: H. STREDDE

DATE: 9-90

REVISION DATE:

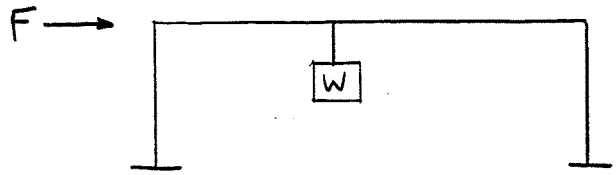

F = WGT OF I.H. = 64000 LBS.

F IS SHEAR FORCE OF BOLTS FASTENING BEAM TO TRIPOD 2 BOLTS AT EACH CORNER, TAKE FORCE

$$\phi \text{ of Fastener} = \left[\frac{64000 \times 4}{2 \cdot \pi \cdot 48000}\right]^{1/2} = 0.92'', \text{ SAY } 1''\phi$$

$\frac{4 \times 120000}{\text{A449 BOLTS}}$

FERMILAB
ENGINEERING NOTE

SECTION	PROJECT	SERIAL-CATEGORY	PAGE

SUBJECT: EAST-WEST TIPPING OF TRIPOD ASSEM.

NAME: H. STREDDE

DATE: 9/90

REVISION DATE:

W = WGT OF I.H. = 32 TONS

$$\left[207^2 + 39\tfrac{1}{2}^2\right]^{1/2} = 210.7''$$

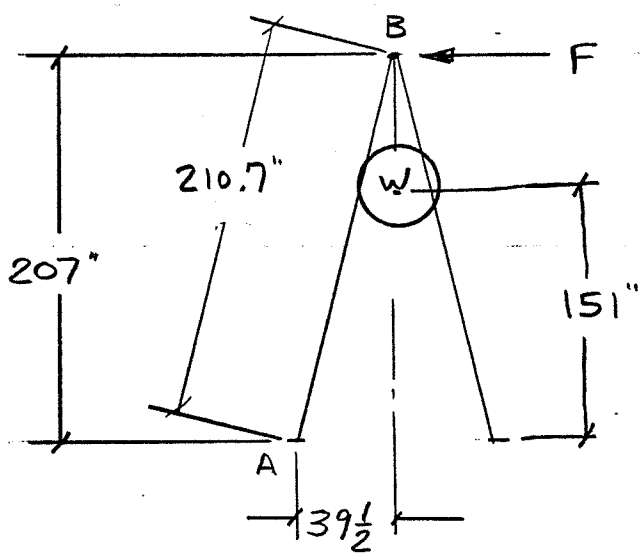

$$\Sigma M_A = 207 \times F - W \times 39\tfrac{1}{2}$$

$$F = \frac{32^T \times 39\tfrac{1}{2}}{207} = 6.1 \text{ TONS}$$

LBL OVERTURNING CRITERIA, RAISE C.G. 3" IS MET WITH LINK AB (TRUE LENGTH) 3" > THAN VERTICAL DIMENSION.

FERMILAB
ENGINEERING NOTE

SECTION	PROJECT	SERIAL-CATEGORY	PAGE

SUBJECT

NAME

DATE

REVISION DATE

F CAN BE ≈ 16 TONS
HYD. CYL. FORCE PULLING EC SUB-ASSEMBLY.
W = 32 TONS, WGT OF I.H.

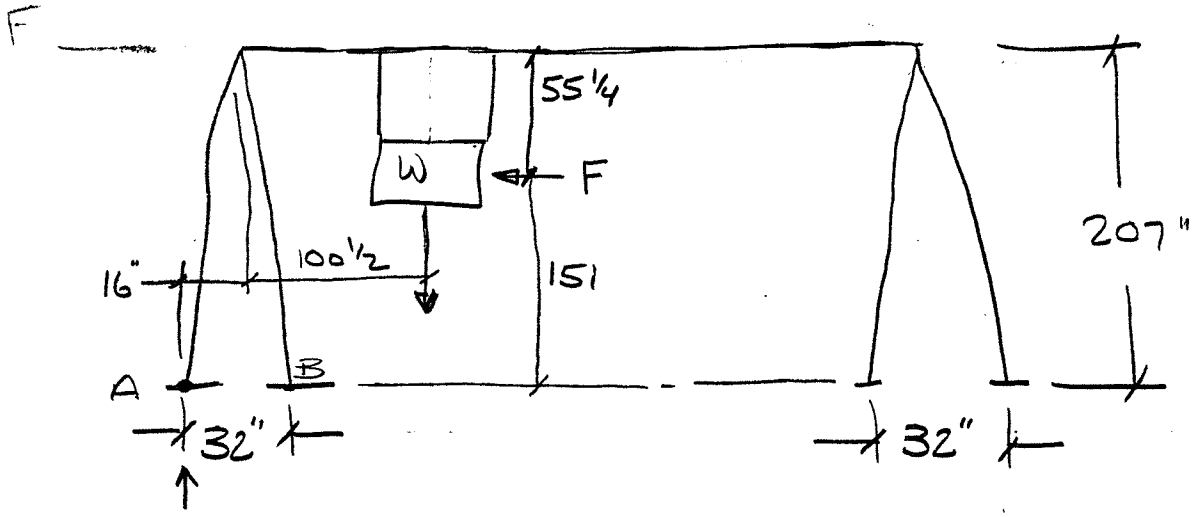

$$\Sigma M_A = (116\tfrac{1}{2})(32) - 151 \times F$$

$$F = \frac{(116\tfrac{1}{2})(32)}{151} = 24.6\ T$$

$$\Sigma M_B = (84.5)(32) - (151)(16) + (32)(R)$$

$$R = \frac{(151)(16) - (84.5)(32)}{32} = -9\ T$$

REACTION AT A due W = 19000 LBS
PLUS F = 18000
37000 LBS

$$\frac{P}{A} = \frac{37000}{5.58} = 6631 \text{ psi}$$

$$\frac{Pec}{I} = \frac{37000 \times 3.312 \times 3.312}{28.1} = 14{,}443 \text{ psi}$$

21,074 psi

IH Installation Fixture

The fixture used to hold the IH module while the EC Calorimeter is pulled over it consists of two tripod frames with a double wide flange between them. The two tripods have legs made of 6" Schedule 40 pipe, these legs are tied together with 2" Schedule 40 pipe. One of the legs sits on and is attached to a box made of 3/4" plates.

The fixture was analyzed using ANSYS. The element used was a 3-D beam (STIF4). Equivalent properties were figured for the double wide flange. The legs of the tripods were constrained in the Y direction (vertical). The box at the bottom of the tripod leg was not used in this analysis, the leg was constrained at the point of attachment to the box. The cross beam was loaded at two points representing the IH load.

The reaction force at the point where the tripod leg attaches to the box was then used in an analysis of the box itself. The box was modeled using plate elements (STIF63). The bottom of the box was constrained in the Y (vertical) direction. The top of the box was loaded in roughly a circular area to represent the pipe attachment area. The reaction force from the previous analysis was divided among these nodes.

The results from both analyses are tabulated below.

BEAM ANALYSIS

STRESS	LOCATION
702 psi axial	2" pipe - tie piece
-3342 psi axial	Tripod leg over box
287 psi bending (szz)	Tripod leg below tie
-136 psi bending (szz)	Tripod leg
7451 psi bending (syy)	Cross beam
-519 psi bending (syy)	2" pipe - tie piece

DEFLECTION	LOCATION
-.2157	Top beam @ 168"

PLATE ANALYSIS

STRESS INTENSITY	LOCATION
12253 psi (bottom)	Bottom of vertical plate (under load)
12253 psi (middle)	Bottom of vertical plate (under load)
12493 psi (top)	Top of vertical plate (under load)
DEFLECTION	**LOCATION**
.0078"	Center of top plate

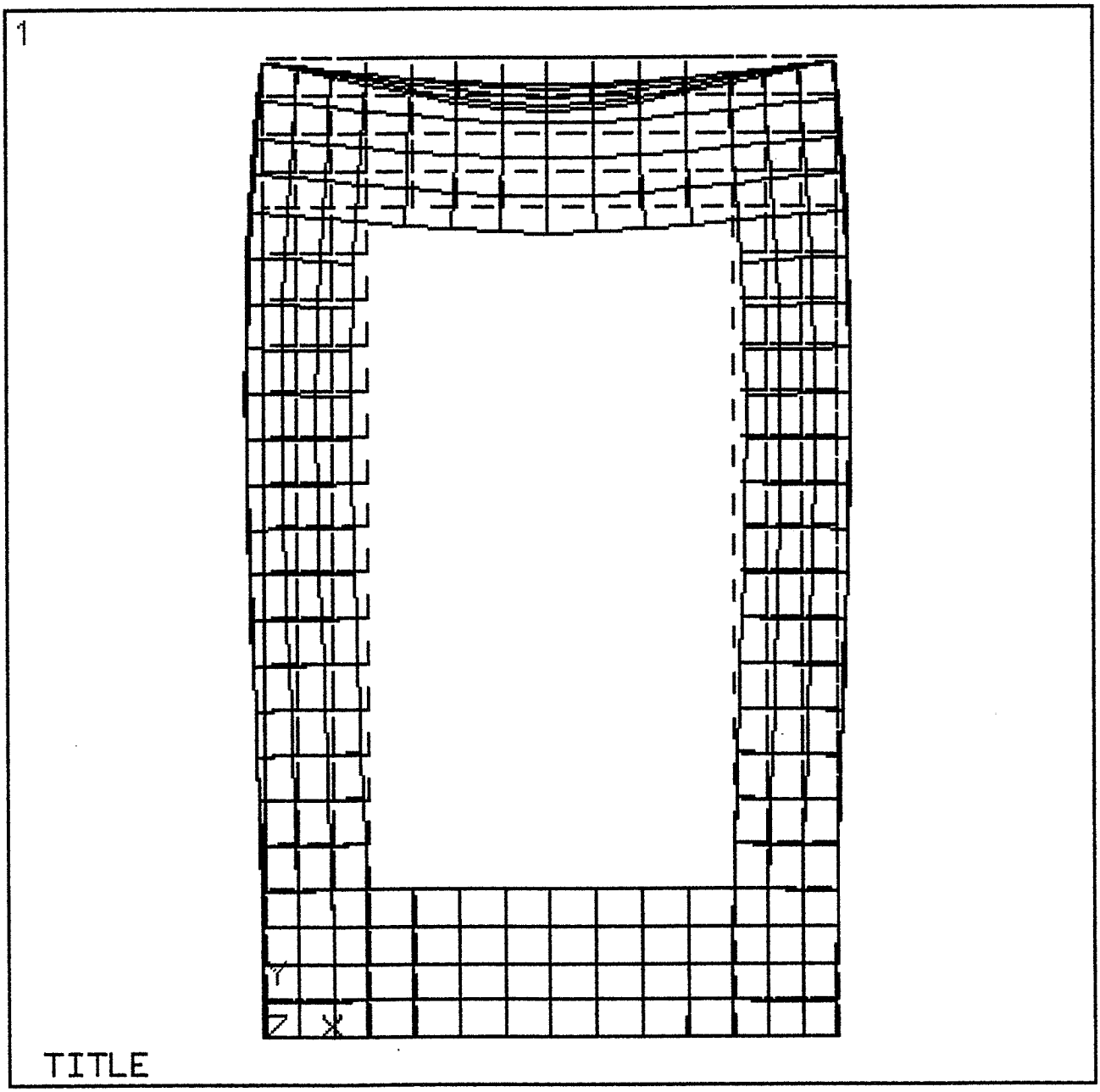

ANSYS 4.
SEP 18 19
14:27:46
POST1 DISP
STEP=1
ITER=1
DMX =0.007

DSCA=151.1
ZV =1
DIST=11.8
XF =6.25
YF =10.75

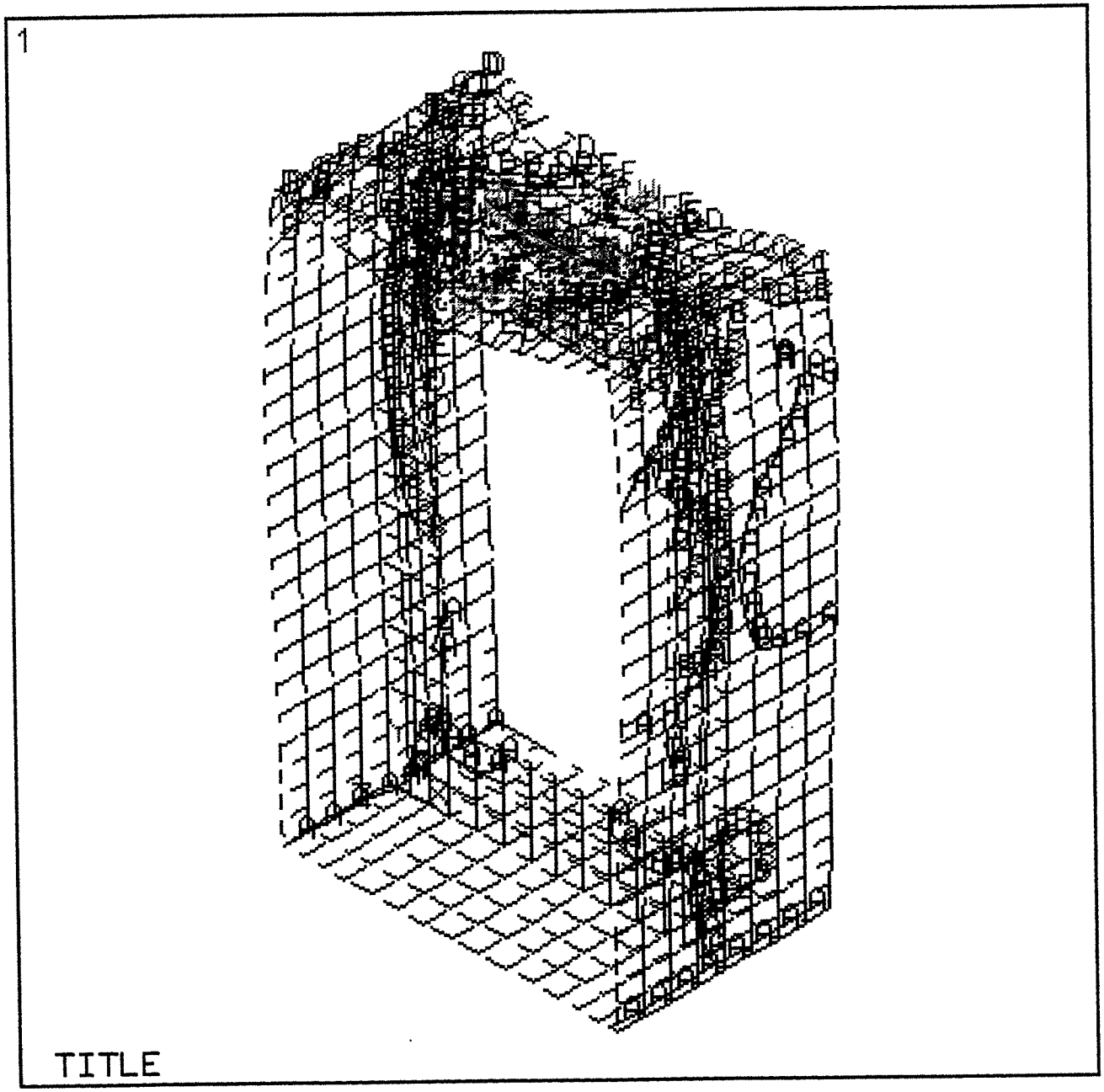

ANSYS 4.
SEP 18 199
13:38:58
POST1 STRE
STEP=1
ITER=1
SI (AVG)
TOP
DMX =0.007
SMN =18.2
SMX =12493

XV =1
YV =1
ZV =1
DIST=14.25
XF =6.25
YF =10.75
A =711.2
B =2097
C =3483
D =4869
E =6255
F =7641

H =1041
I =1180

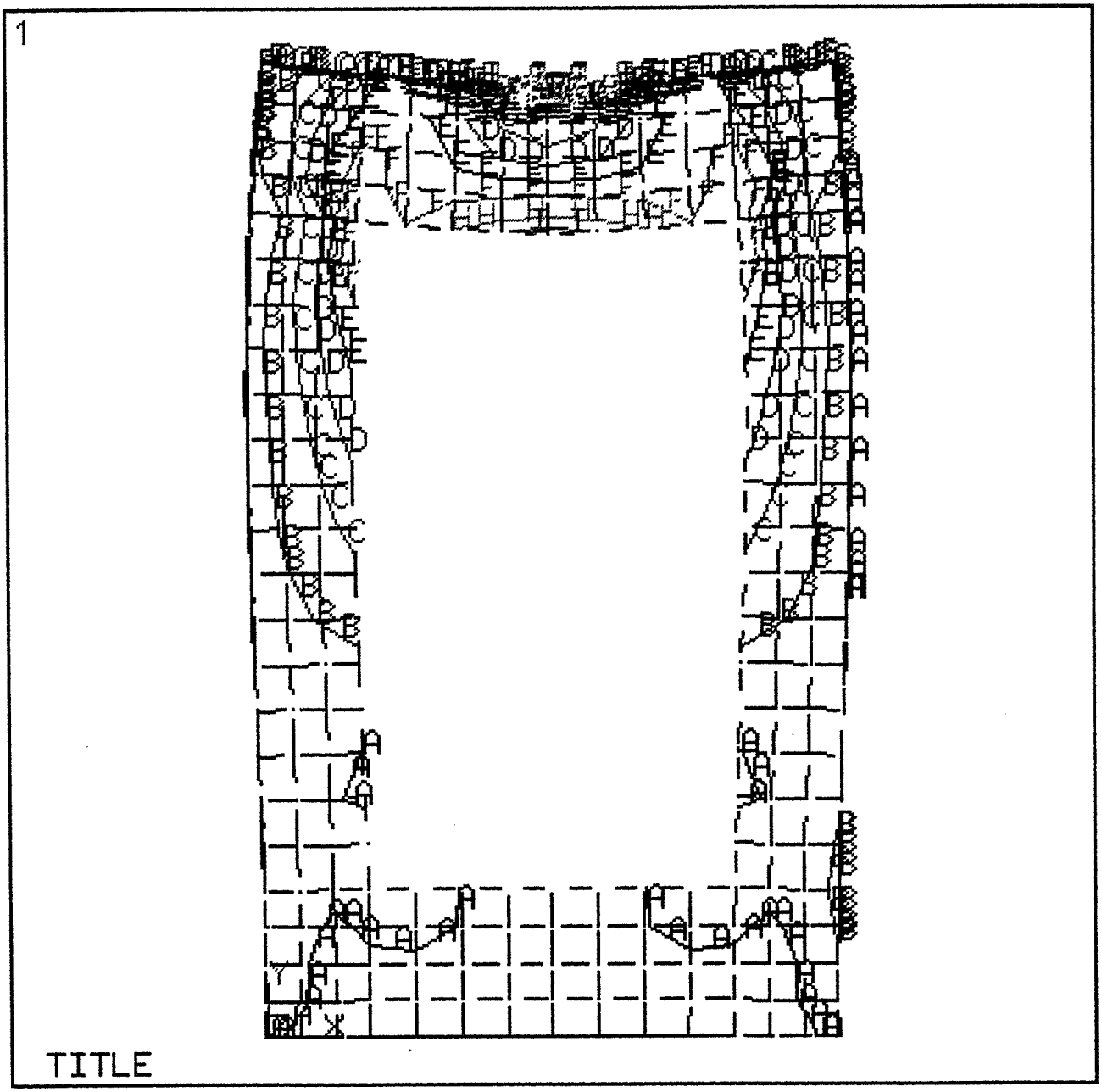

ANSYS 4.
SEP 18 199
12:42:47
POST1 STRE
STEP=1
ITER=1
SI (AVG)
TOP
DMX =0.007
SMN =18.2
SMX =12493

ZV =1
DIST=11.82
XF =6.25
YF =10.75
A =711.2
B =2097
C =3483
D =4869
E =6255
F =7641

H =1041
I =1180

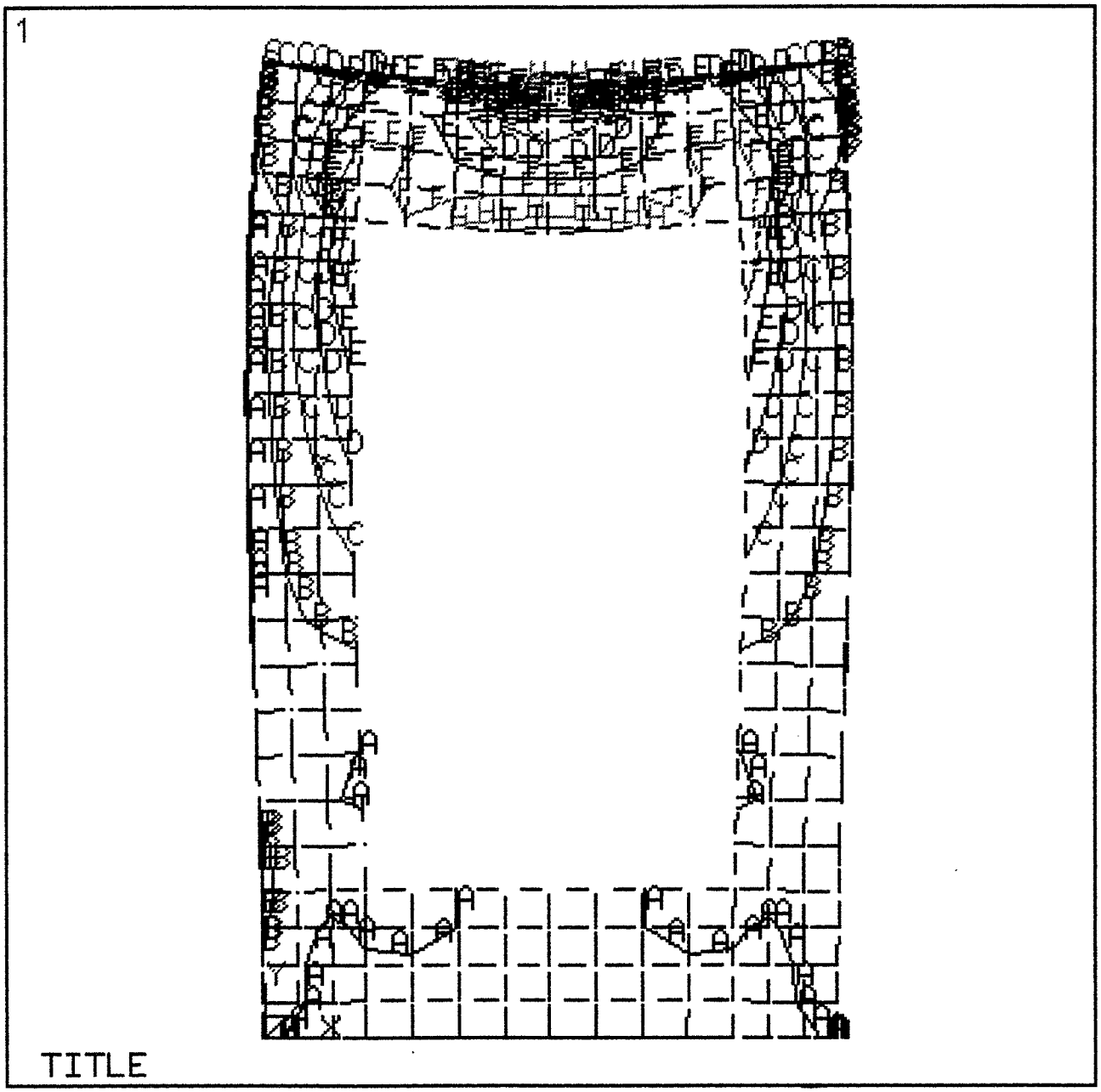

ANSYS 4.
SEP 18 199
14:19:17
POST1 STRE
STEP=1
ITER=1
SI (AVG)
BOTTOM
DMX =0.007
SMN =18.21
SMX =12253

ZV =1
DIST=11.82
XF =6.25
YF =10.75
A =697.9
B =2057
C =3417
D =4776
E =6135
F =7495

H =10214
I =11573

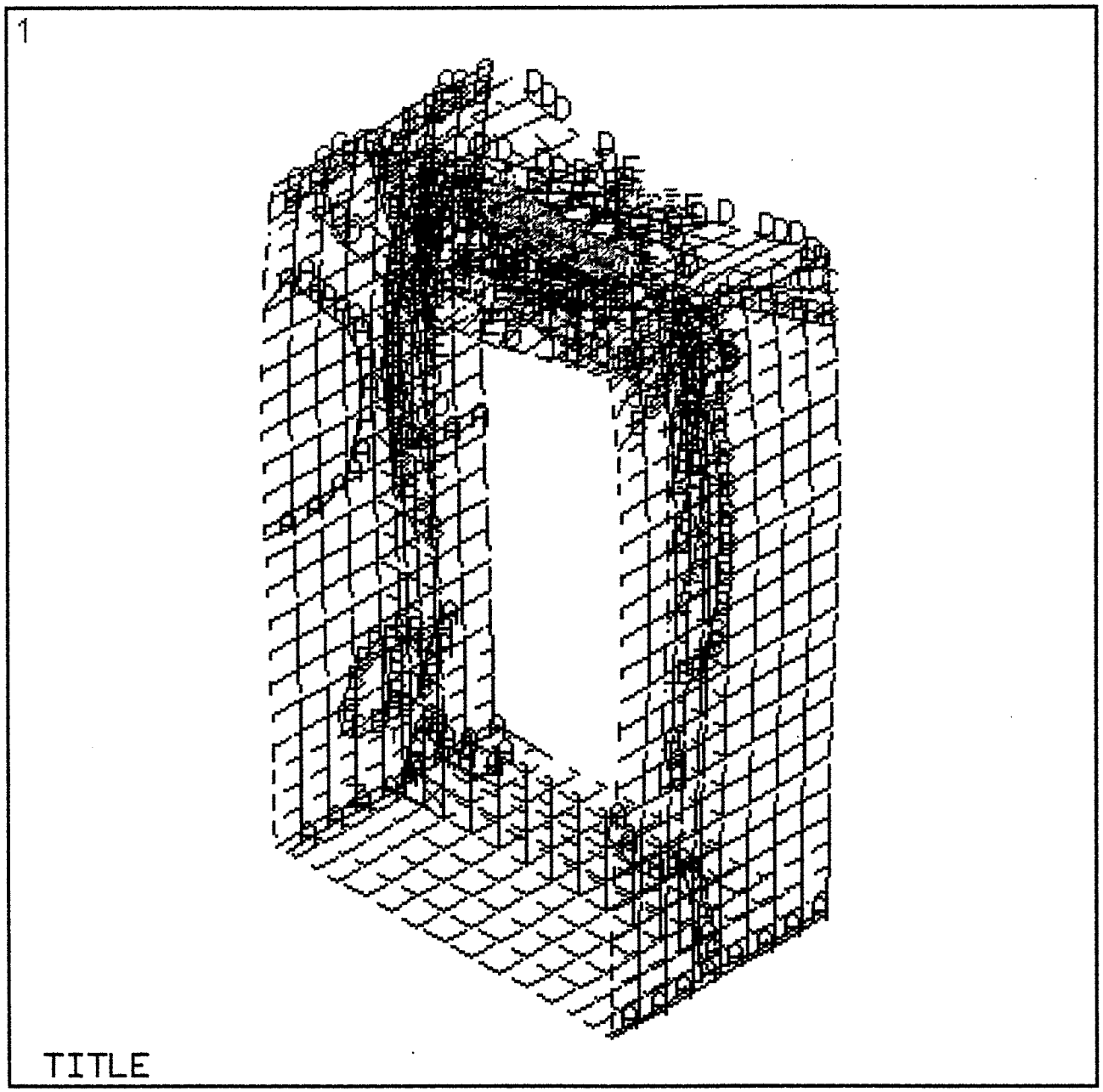

ANSYS 4.
SEP 18 199
13:45:35
POST1 STRE
STEP=1
ITER=1
SI (AVG)
BOTTOM
DMX =0.007
SMN =18.21
SMX =12253

XV =1
YV =1
ZV =1
DIST=14.25
XF =6.25
YF =10.75
A =697.9
B =2057
C =3417
D =4776
E =6135
F =7495

H =10214
I =11573

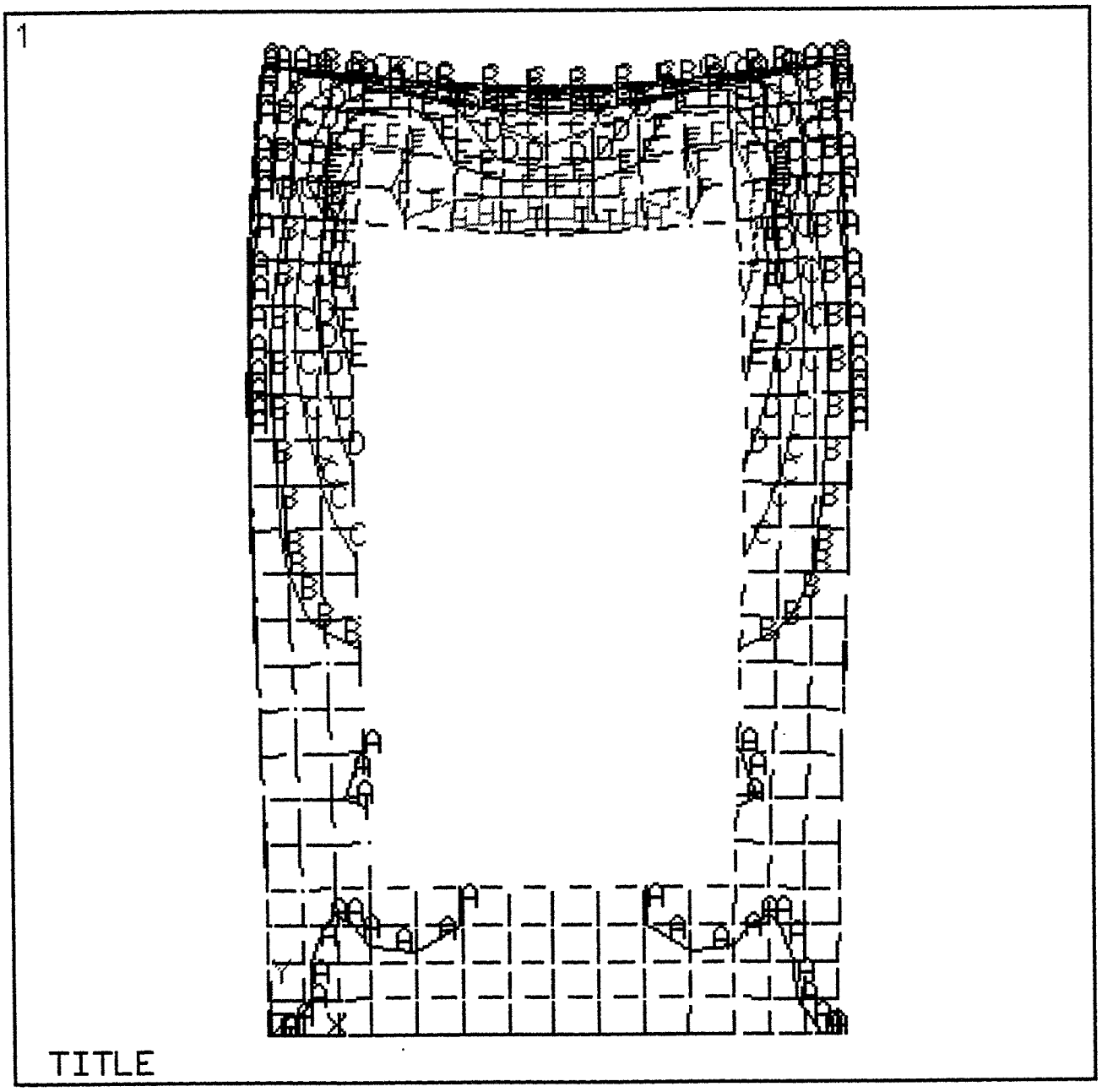

ANSYS 4.
SEP 18 19
12:37:42
POST1 STRE
STEP=1
ITER=1
SI (AVG
MIDDLE
DMX =0.00
SMN =18.2
SMX =1225

ZV =1
DIST=11.8
XF =6.25
YF =10.7
A =697.
B =2057
C =3417
D =4776
E =6135
F =7495

H =1021
I =1157

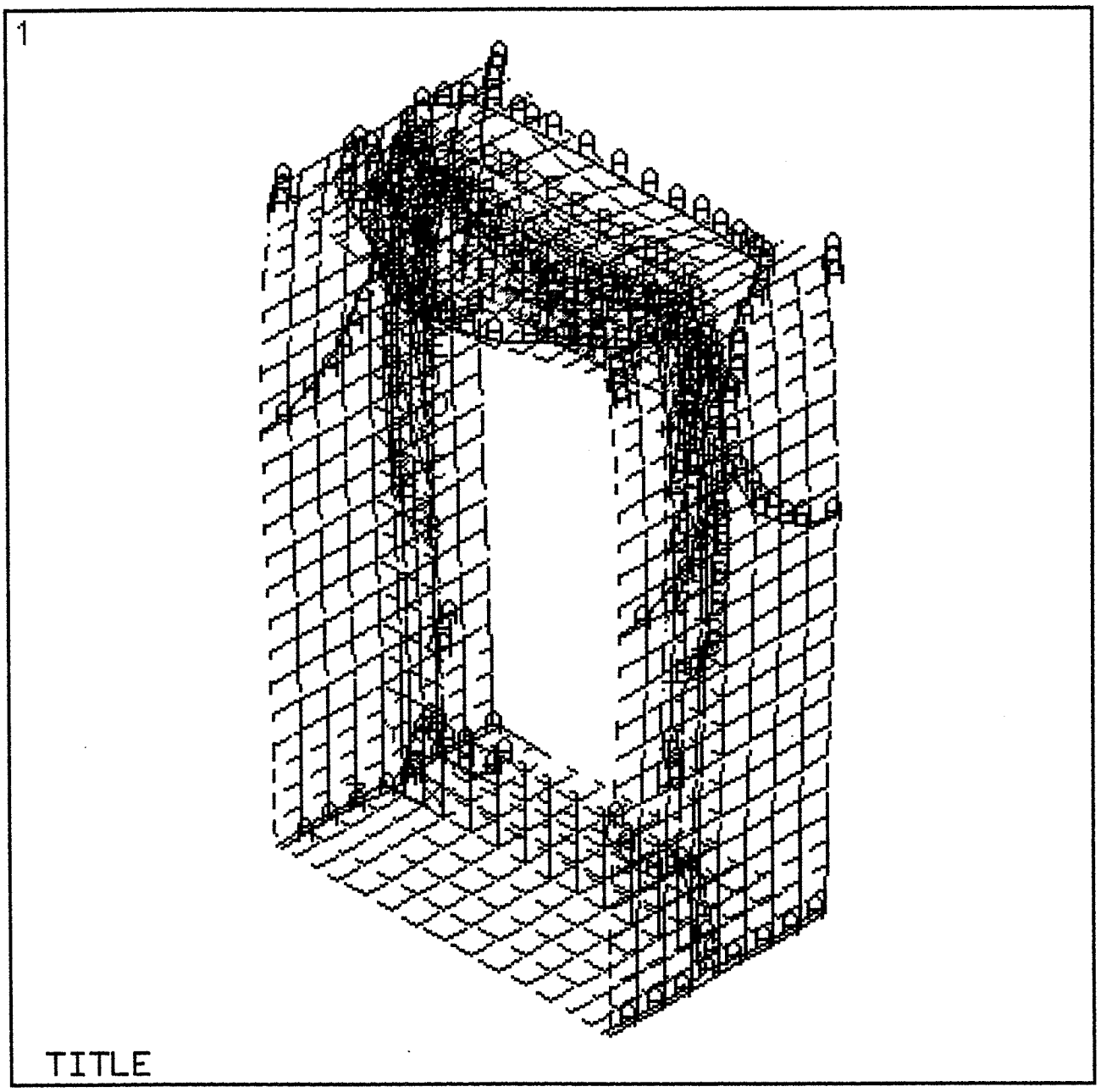

ANSYS 4.
SEP 18 199
12:27:43
POST1 STRE
STEP=1
ITER=1
SI (AVG)
MIDDLE
DMX =0.007
SMN =18.20
SMX =12253

XV =1
YV =1
ZV =1
DIST=14.25
XF =6.25
YF =10.75
A =697.8
B =2057
C =3417
D =4776
E =6135
F =7495

H =10214
I =11573

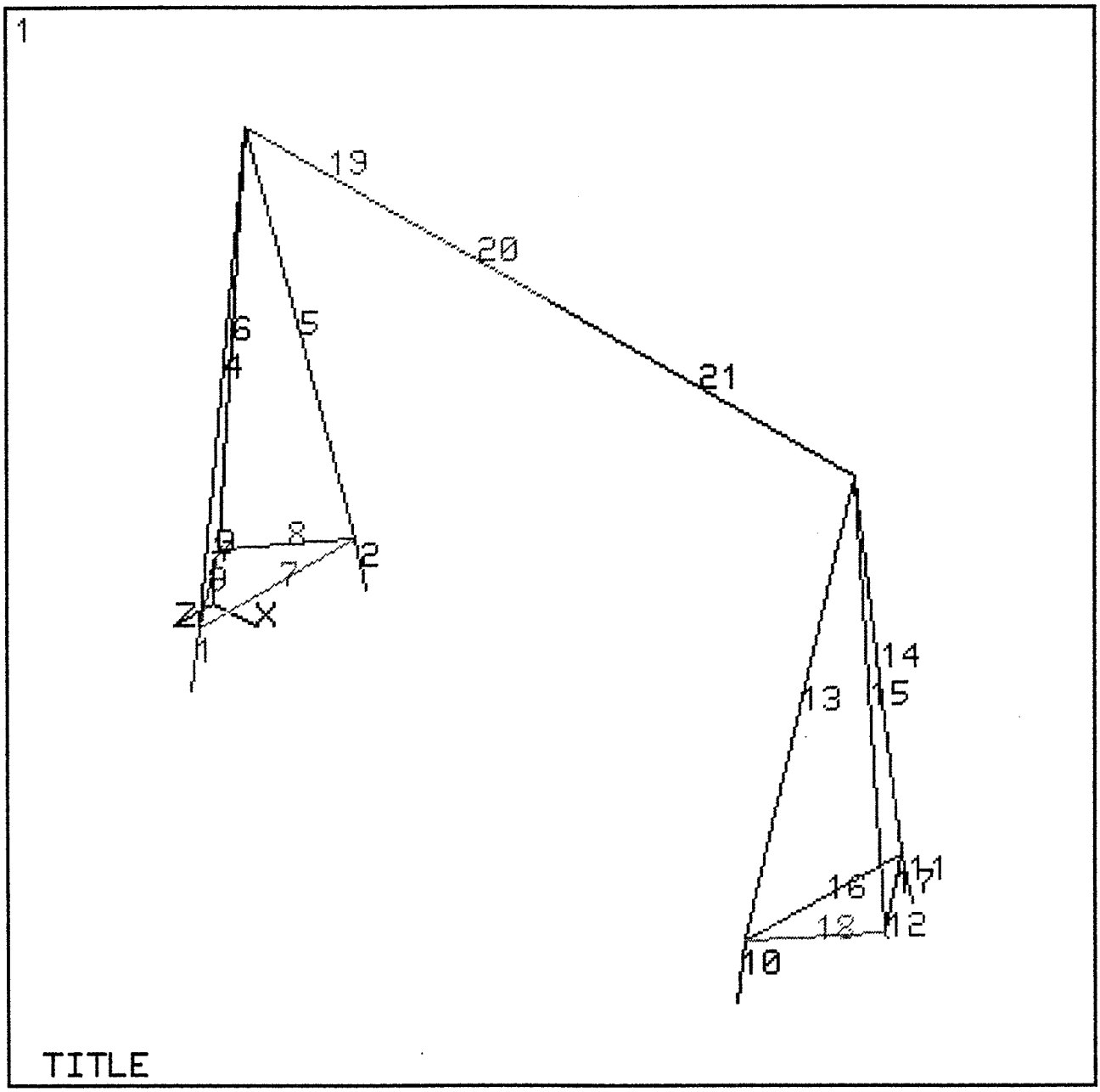

ANSYS 4.4
OCT 2 1990
08:21:46
PREP7 ELEME
ELEM NUM

XV =1
YV =1
ZV =1
DIST=193.77
XF =170
YF =108.75

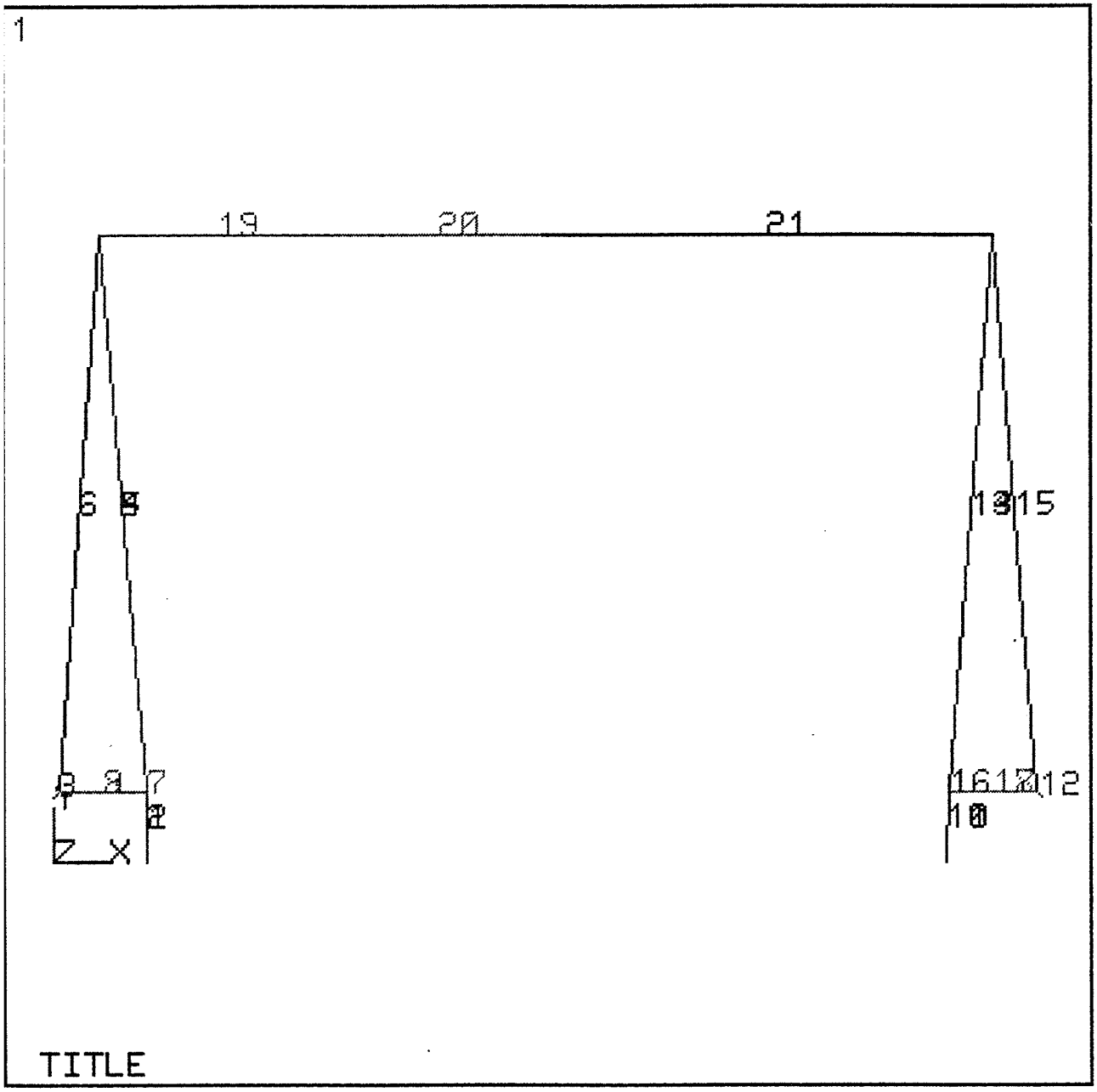

ANSYS 4.4
OCT 2 1990
08:24:13
PREP7 ELEME
ELEM NUM

ZV =1
DIST=187
XF =170
YF =108.75