Fermilab

MECHANICAL SUPPORT DEPARTMENT
ENGINEERING NOTE

NUMBER: **MSD EN-009-E872** DATE: **3/19/96**

TITLE: **E872, Mu Sweep II Magnet**

AUTHOR(s): **Donald V. Mitchell, Ang Lee, Fred Renken, Andy Stefanik**

REVIEWER: Ang Lee

KEY WORDS: E872, Mu Sweep II, Dipole Magnet, Coils

ABSTRACT/SUMMARY:

The Mu Sweep II magnet for E872 is analyzed for mechanical soundness. The magnet will be operated in the HIL enclosure. Due to the geometry of this magnet and the behavior of a dipole magnet of this nature, it is shown that the steel forces are merely compressive and that the steel of this magnet under operating conditions will act as a clamp, not allowing the steel to move. Tack welds are the only necessary fasteners to maintain structural soundness in this design. Calculations are shown for coil forces, restraint bracket stresses, boss plate weldment, water manifold code requirements, and system cooling.

E872 Mu Sweep II Magnet

Mechanical Analysis

RD/MSD/MSG Engineering Note
MSD-EN-009-E872

19 MARCH 1996

Prepared by:

Donald V. Mitchell
RD/Mechanical Support Department

Internal review by:

RD/MSD/Engineering Analysis Group

Table of Contents

Engineering Note Title Page

Approvals

Table of Contents

Section I: General Operating Parameters and Summary of Findings

Section II: Floor Loading and Base Steel Block Analysis

Section III: Summary of Coil Loads and Inner Restraint Bracket Analysis

Section IV: Outer Restraint Bracket Analysis and Boss Plate Weld Calculations

Section V: Coil Stresses / Electromagnetic Finite Element Analysis of coils

Section VI: Water Manifold Analysis and Cooling Calculations

Section VII: Assembly Instructions

Section VIII: Reference Drawings

Andy,

The drawings for the E872 Mu Sweep II magnet can be found in my rdmd02 account in the following directory: /rdmd/v02_1/dmitchel/e872/drawings

A draftsman can easily copy these drawings into his own account for proper detailing. The drawings are:

aluminum_bus_connect.dwg
aluminum_inner_restraint.dwg
aluminum_lug_flag.dwg
aluminum_outer_restraint.dwg
aluminum_strap.dwg
full_assembly.dwg
steel_boss_plate.dwg

Also included in this directory is a drawing that Ray created which shows the steel dimensions he measured in the field. These numbers should be verified and appropriate modifications should be made to the assembly drawing. This drawing is:

steel_block_layout.dwg

NOTE: THE ASSEMBLY DRAWING DOES NOT REPRESENT THE ACTUAL STEEL BLOCK SIZES. THE SIZES ARE APPROXIMATE AND MUST BE FIELD MEASURED AND VERIFIED. APPROPRIATE CHANGES SHOULD BE MADE BEFORE DETAILING BEGINS.

The individual steel block drawings can be retreived from XDCS with the following search information: (these drawings were drawn by Ray and most of these blocks, if not all, have been fabricated.)

DWG series number: 9204.250-M*-328***

The water manifold drawings already exists. DWG # 3832.235-MD-267838

The following work still needs to be accomplished:

Drafting tasks:

Design and detail manifold clamps

Detail aluminum "bus connects"

Detail aluminum "Green Die Lug" flags

Detail steel boss plates

Detail aluminum outer restraint bracket and aluminum strap

Detail aluminum inner restraint bracket

Detail Full Assembly Drawing (show magnet in layers similiar to KTeV's Mu Sweep II magnet. Dwgs 3832.235-ME-267685 -01 -02

Insure that ALL steel block drawings are correct

**** Field verify ALL steel block dimensions and make necessary changes to

the appropriate drawings before detailing begins!!!!!!!!

gineering Tasks:

Order ARBORON filler material from Western Slate (see old P.O.)

Order Rubber, 1/4" thick. Suggested vendor, Aero Rubber (see old P.O.)

Verify beam line height and calculate how much floor shim is required

Find out the "Z" center position for this magnet in HIL and have the surveyors properly mark the floor as to where the floor pads are to be located.

Follow up on field installation and coordinate testing.

Fermilab

PURCHASE REQUISITION

(SEE INSTRUCTIONS ON REVERSE SIDE - DO NOT WRITE IN SHADED AREAS)

LAM

REQUESTED BY	EMPLOYEE NO.	EXT.	ORGANIZATION UNIT	MAIL STATION	REQUESTER'S IDENTIFIER	REQ. DATE
Donald V. Mitchell	9401	4710	RD/MSD	231	RFK950239	2/21/95

SUGGESTED VENDOR	PHONE NO.	PROJECT DESCRIPTION	APPROVALS	EMPLOYEE NO
Western Slate 881 Industrial Drive Elmhurst, IL 60126-0845	(708) 279-6660	WBS 2.3.5.4 KTeV Mu Sweep II Magnet Filler Material	R Tokarski 3251	

DELIVER TO (INCLUDE NAME & BLDG. NO.)
Bud Koecher
MP9
x 3377 P. 653

BUS. OFFICE

SHORT DESCRIPTION (30 CHARACTERS OR LESS): Mu Sweep II ARBORON Filler

PREVIOUS P.O.

DIR. OFFICE

REC. AREA CODE	QUANTITY	ITEM DESCRIPTION	ESTIMATED UNIT PRICE	DO NOT USE UNIT PRICE	DISCOUNT	DEL. DATE
	12	ARBORON, 6.75" x 1.0" x 114"	$89.25			
	12	ARBORON, 6.75" x 1/8" x 96"	$14.08			
		Note: Prices Quoted by "Rick" at Western Slate on 2/21/95				

CHECK BOX IF CONFERENCE REQ. [ ] CHECK BOX TO RECEIVE P. O. COPY VIA E-MAIL [ ] TOTAL AMOUNT OF THIS REQUISITION $ $1,239.96

BUDGET CODE	PERCENTAGE	NEPA APPROVAL	DIVISION OFFICE APPROVAL	BUDGET OFFICE APPROVAL	PURCHASING/CONTRACTS DEPT. STAMP
KUI	100	REVIEWED FOR NEPA COMPLIANCE			FEB 22 '95
(5)		DIV/SECT RD			
		ID# 1022-CX 2			

P.O. NUMBER	VENDOR CODE	BUYER	AT RIGHT, INDICATE SPECIAL ORDER TYPE (SPARES/ISS/GSA/CAFE/FAB/T&M)	GSA/FSS CONTRACT NO.

SEND P.O. TO ATTENTION OF	SHIP VIA	F.O.B. & POINT OF SHIPMENT FOR FB/FC/FD	TERMS	REPORTING CODE	COST ELEMENT	CONFIRMED TO & DATE

CHECK IF P.O. FOR INTERNAL USE ONLY	CHECK IF REQUESTER TO APPROVE PAYMENT	BEGINNING STD. TEXT CODES	ENDING STD. TEXT CODES	REQUI 42788
[ ]	[ ]			

FL-29 REV 6/93

Fermilab

PURCHASE REQUISITION

(SEE INSTRUCTIONS ON REVERSE SIDE — DO NOT WRITE IN SHADED AREAS)

Research Division Office
LOGGED

REQUESTED BY	EMPLOYEE NO.	EXT.	ORGANIZATION UNIT	MAIL STATION	REQUESTER'S IDENTIFIER	REQ. DATE
Donald V. Mitchell	9901	4710	RD/MSD	231	RFK950248	2/22/95

SUGGESTED VENDOR	PHONE NO.	PROJECT DESCRIPTION	APPROVALS	EMPLOYEE NO
Aero Rubber Co., Inc. 7501 W. 99th Place P.O. Box 1409 Bridgeview, IL 60455 ATTN: Charlie Gust	(708) 430-4900	WBS 2.3.5.4 KTeV Mu Sweep II Magnet Rubber Sheet	R Toward	5710

DELIVER TO (INCLUDE NAME & BLDG. NO.): Bud Koecher, MP9, x 3377 P. 653

BUS. OFFICE:

SHORT DESCRIPTION (30 CHARACTERS OR LESS): Mu Sweep II Rubber Sheet

PREVIOUS P.O.:

DIR. OFFICE:

REC. AREA CODE	QUANTITY	ITEM DESCRIPTION	ESTIMATED UNIT PRICE	DO NOT USE: UNIT PRICE	DISCOUNT	DEL. DATE
	5	1/4" x 6.75" x 30ft. EPDM Rubber, Black	$ 97.80/Roll			
		60 ± 5 Durometer				

CHECK BOX IF CONFERENCE REQ. ☐ CHECK BOX TO RECEIVE P. O. COPY VIA E-MAIL ☐ TOTAL AMOUNT OF THIS REQUISITION $ $489.00

BUDGET CODE	PERCENTAGE	NEPA APPROVAL	DIVISION OFFICE APPROVAL	BUDGET OFFICE APPROVAL	PURCHASING/CONTRACTS DEPT. STAMP
KUI	100	REVIEWED FOR NEPA COMPLIANCE			MAR - 2 1995
(5)		DIV/SECT RD			
		ID# 10221 CX 2			

P.O. NUMBER	VENDOR CODE	BUYER	AT RIGHT, INDICATE SPECIAL ORDER TYPE (SPARES/ISS/GSA/CAFE/FAB/T&M)	GSA/FSS CONTRACT NO.

SEND P.O. TO ATTENTION OF	SHIP VIA	F.O.B. & POINT OF SHIPMENT FOR FB/FC/FD	TERMS	REPORTING CODE	COST ELEMENT	CONFIRMED TO & DATE

CHECK IF P.O. FOR INTERNAL USE ONLY ☐ CHECK IF REQUESTER TO APPROVE PAYMENT ☐ BEGINNING STD. TEXT CODES | ENDING STD. TEXT CODES | R 43114

FL-29 REV 6/93

E872 Mu Sweep II Magnet

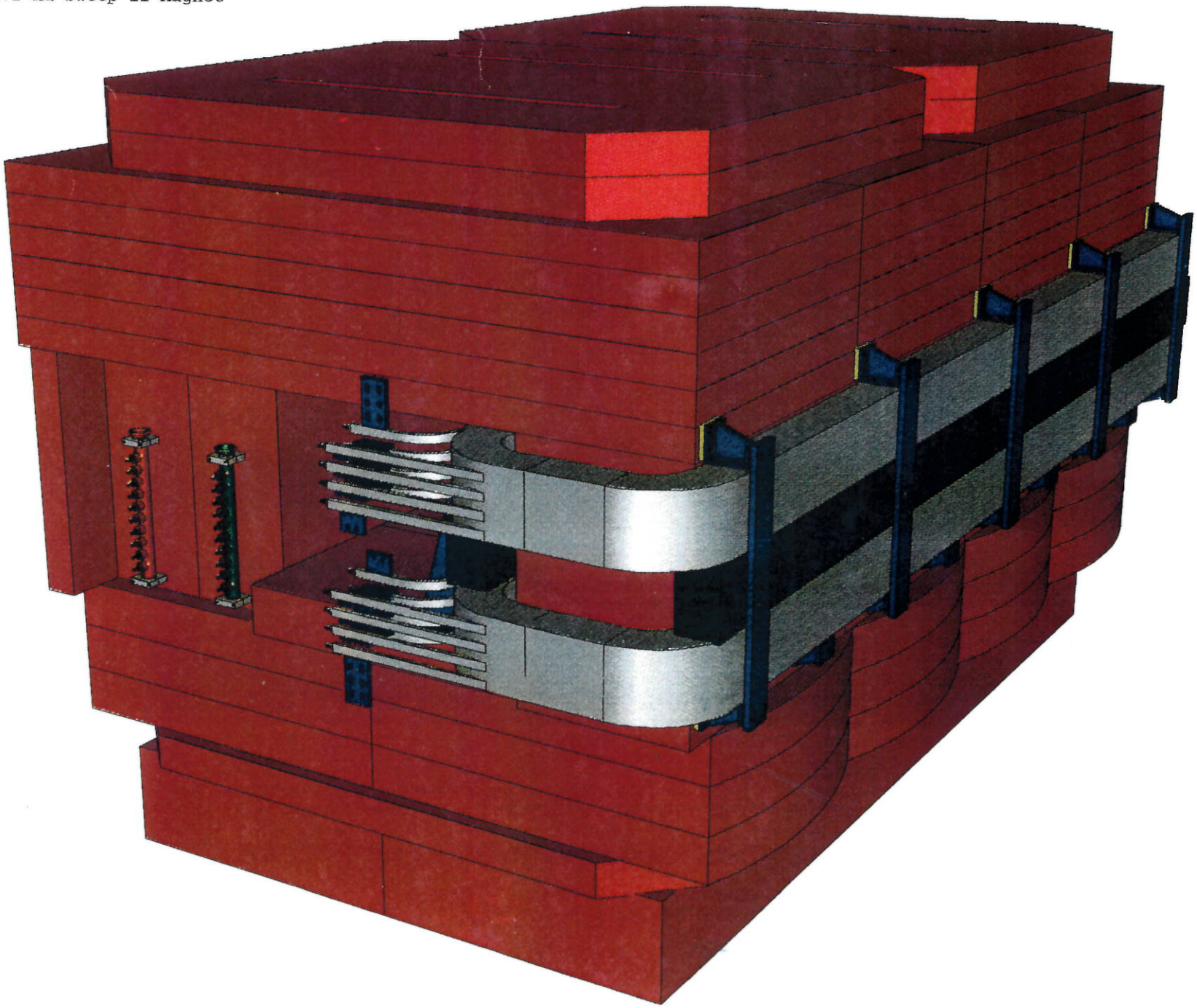

E872 Mu Sweep II Magnet

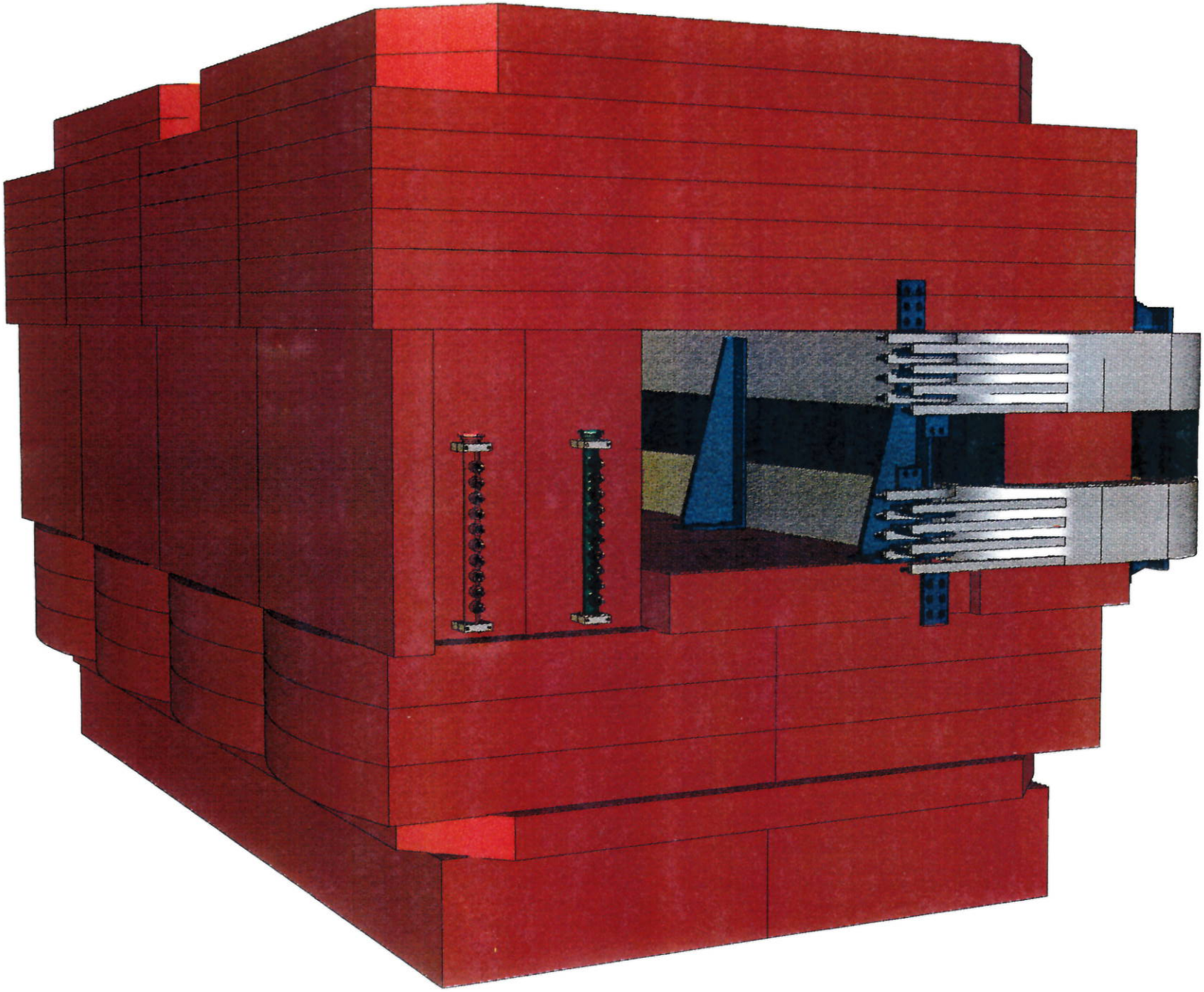

Section I
General Operating Parameters and Summary of Findings

Useful Data:

Mechanical:

16.75 x 49.88 x 188 Block weighs 44,380 Lbs,	QTY: 2
5.75 x 98.38 x 106.38 Block weighs 17,000 Lbs	QTY: 6
7.5 x 48 x 62 Block weighs 6339 Lbs	QTY: 24
8 x 33.25 x 49 Block weighs 3702 Lbs	QTY: 6
5.5 x 40 x 51 Block weighs 3186 Lbs	QTY: 4
17.5 x 40 x 184 Block weighs 36,579 Lbs	QTY: 2
4.81 x 51 x 120 Block weighs 8360 Lbs	QTY: 24
27.5 x 40 x 51 Block weighs 15,932 Lbs	QTY: 4
Coil weighs 5,745 Lbs. (2.87 Tons)	QTY: 2

Magnet total weight is roughly: 358.6 Tons

Electrical:
Each coil is 8 turns x 8 turns (conductor size: 1.25" x .75" with a .40" diam. cooling hole)
1200 amps maximum
250 KW power supply
180 volts

Physics:
5.2 meter length
76,800 Amp-Turn/pole

The Mu Sweep II magnet is a simple dipole conventional magnet. Due to the circulating magnetic flux through the steel, the magnetic forces tend to pull the steel together in a clamping fashion. Therefore, it can be stated that if the steel blocks are stable in a non-operating mode, then the blocks will also be stable under the full power of the magnet. i.e. only compressive stresses exist on the steel blocks which do not act in a direction that would allow the individual blocks to move. Because of this fact, the blocks have been designed to stack together with very few air gaps and are tack welded into their final position. This magnet block configuration is very stable and is supported on 4 grouted and shimmed base pads.

When the magnet is energized, an electromagnetic force is created which causes the coils to push away from the steel pole which they are nested around. In reality, the stiffness of the coil and the stiffness of the restraint brackets limit the deflection. Ang Lee's attached calculations show that the coil deflection can be limited to less than 1/16" if there is one center restraint bracket. Ang assumed that there would be at least three restraint brackets which he calculated would keep the coil stresses down below 300 psi. The actual design will use five restraint brackets which will more than adequately provide coil support. Ang performed a 2-D and a 3-D coil analysis with the 3-D analysis yielding a 30% higher horizontal force than the 2-D case. The 3-D results are used in the analysis of the restraint brackets.

The *large* added benefit of the coil stiffness in limiting the deflection of the brackets will be ignored. The coil will initially transfer the entire load into the coil restraint brackets. However, as the restraint brackets start to deflect, the load immediately begins to decrease as the coil pack, due to its stiffness, absorbs most of the load. It would require a complex study of this behavior to understand the true load distribution. By not including the stiffness of the coil and by assuming all of the load is taken by the restraint brackets, the bracket design becomes robust. The inner and outer restraint brackets were designed for stress not deflection. Again, calculated deflections are meaningless since the stiffness of the coil pack was ignored in the analysis. All bracket stresses are below the prescribed allowable stresses. This simplified analysis implies that the final design is adequate. Bolting calculations are also presented and shown to be adequate.

The water manifolds were designed by Fred Renken with MAWP of 250 psig at up to 166 °F. The manifolds are made from copper pipe with brazed-on female adapters for mounting brass hose barbs. The hoses are made by Gates with a maximum working pressure of 300 psig. Calculations which conform to ASME B31.3 part 2 are shown in section VI.

The temperature rise and pressure drop of the water/glycol cooling system were completed by Andy Stefanik of RD/MSD. The results show a temperature rise of 56.6 °F and a pressure drop of 200 psi. The maximum temperature that the system should reach will be 166 °F. The maximum pressure will be 200 psig. A spreadsheet formula for these calculations is shown in section VI.

Finally, this magnet will be installed in HIL with the appropriate safety measures taken to protect personnel from electrical hazards.

Floor Loading:

The magnet will be built in-place and will <u>not</u> be aligned after fabrication. The "sweet" spot of the magnet, where the beamline passes through the steel, is quite large and allows for mis-alignment in the order of ± 3/8". Field measurements of the steel must be known so that a grout and shim thickness can be calculated before the steel is positioned.

The grout thickness should be between 1/4" — 1/2" and should be of the epoxy-grout type; not water-based grout.

The grouted steel plates shall be of dimension 12" x 36" and shall be positioned as shown in the assembly drawing.

There will be 4 grouted plates and these plates will transfer a total load of 358.6 Tons into the concrete floor. This is a total floor pressure of:

$$P = \frac{(358.6 \text{ TONS})(2000 \text{ lbs/TON})/4 \text{ supports}}{(12")(36")}$$

$$P = 415. \text{ psi} \qquad P_{allowable} = 3{,}000 \text{ psi}$$

<u>Note:</u> The length of 36" for the base plates and shims is to obtain good steel stabillity.

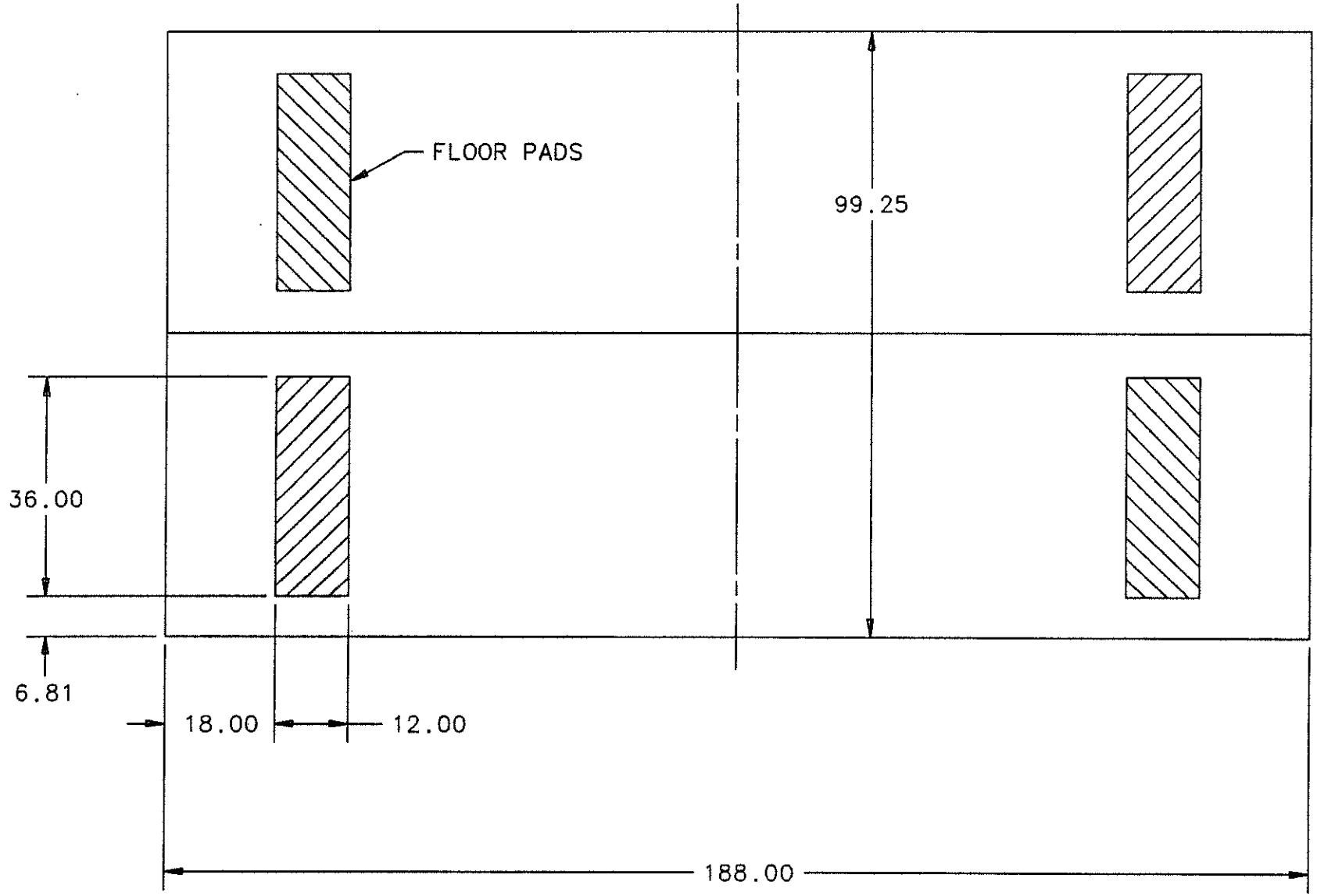
FLOOR PADS
99.25
36.00
6.81
18.00
12.00
188.00

Base Steel Block Analysis: Bending and Deflection

The base steel block sees a very large load. What is the associated deflection and stress on this block?

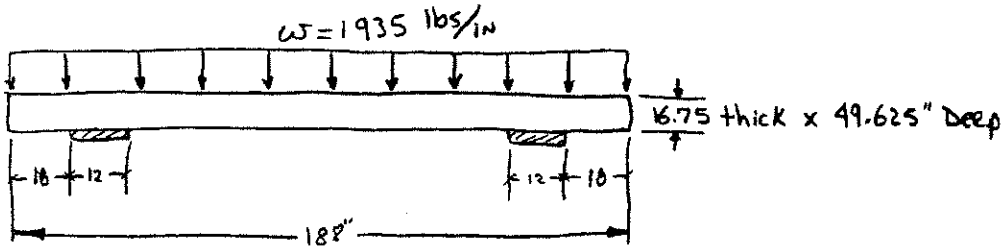

Bottom Block (Beam) = 44,380 lbs

Total Weight of Magnet = 358.6 Tons. = 717,200 lbs

Coil weight (Total) = 5.74 Tons = 11,480 lbs

Total Steel Weight = 352.2 Tons = 704,400 lbs

In the worst case, the bottom block which, is simply supported on floor pads, will see 1/2 of the steel load and all of the coil load. This is a total load of:

$$L = \frac{704{,}400 \text{ lbs}}{2} + 11{,}480 \text{ lbs} = 363{,}680 \text{ lbs}$$

$$w = L/188" = 363{,}680 \text{ lbs}/188" = 1{,}935 \text{ lbs/in}$$

The moment of inertia of this steel block is:

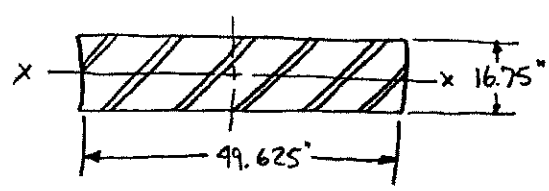

$$I_x = \frac{1}{12}(49.625)(16.75)^3 = 19{,}434 \text{ in}^4 \qquad C = 8.375"$$

$$E = 30{,}000{,}000 \text{ psi}$$

Simplified Beam Analysis:

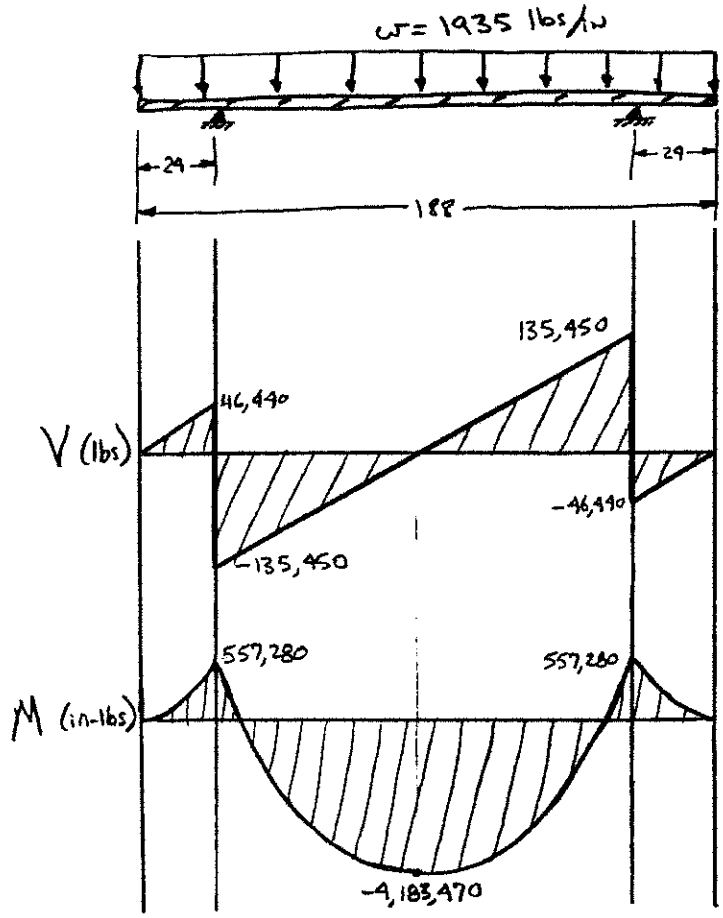

$M_{max} = 4{,}183{,}470$ in-lbs

$$\sigma_{max_{bending}} = \frac{Mc}{I} = \frac{(4{,}183{,}470 \text{ in-lbs})(8.375 \text{ in})}{19{,}434 \text{ in}^4} = 1{,}803 \text{ psi} \quad \underline{\underline{OK}}$$

A rough, but conservatively large, deflection can be calculated if the cantilevered ends are ignored.

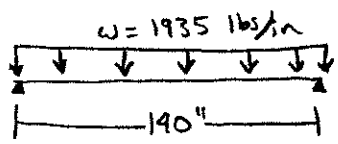

$$\sim\Delta_{max} = \frac{5wL^4}{384EI}$$

$$\sim\Delta_{max} = \frac{(5)(1935)(140)^4}{(384)(30E6)(19{,}434)} = .016" \quad \underline{\underline{OK}}$$

<u>Note:</u> The actual deflection will be <u>Less.</u>

Coil Loads:

From Ang Lee's [RD/MSD/FEG] electromagnetic analysis of there coils, the following magnetic loads were calculated: (These represent the 3-D case where the 2-D case has been increased by 30%)

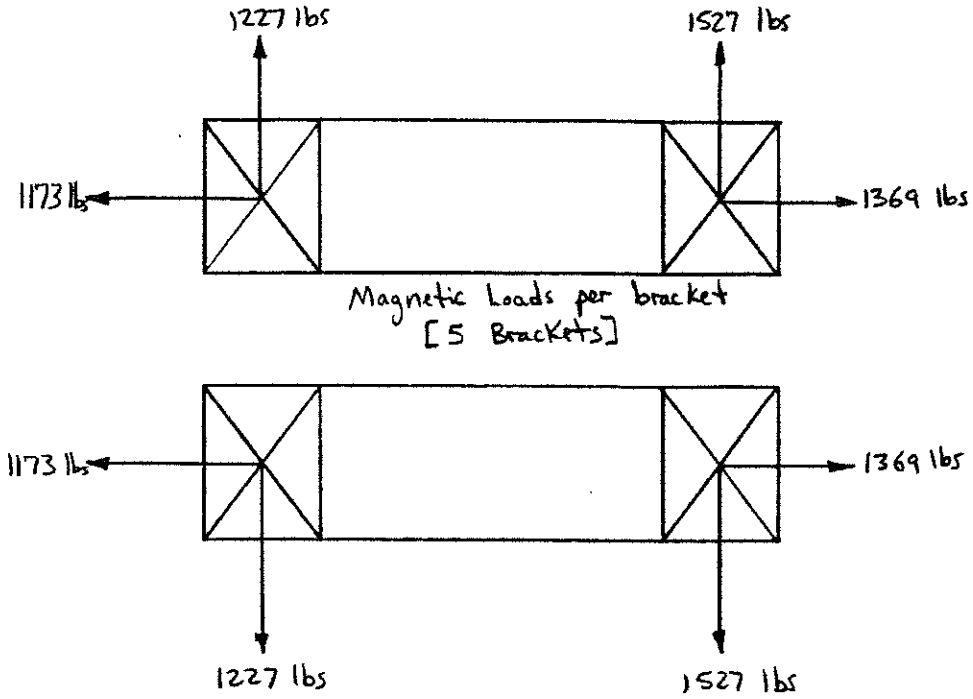

Each coil is roughly 6,000 lbs. Assume that ½ the total coil weight is supported by the outer, lower coil support brackets. Also, assume that 5 out of 9 of these brackets actually carries the weight. This additional load must be taken into account in the outer restraint bracket design.

The gravitational loads are shown in the next illustration:

Gravitational Loads per bracket
[5 brackets]

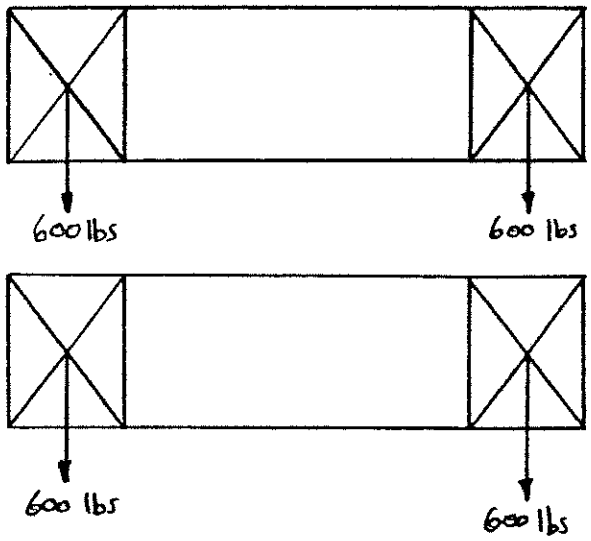

The brackets must be designed for the worst load case. This happens when the coil is energized. The lower coil will then develop loads from both electromagnetic and gravitational forces as shown below:

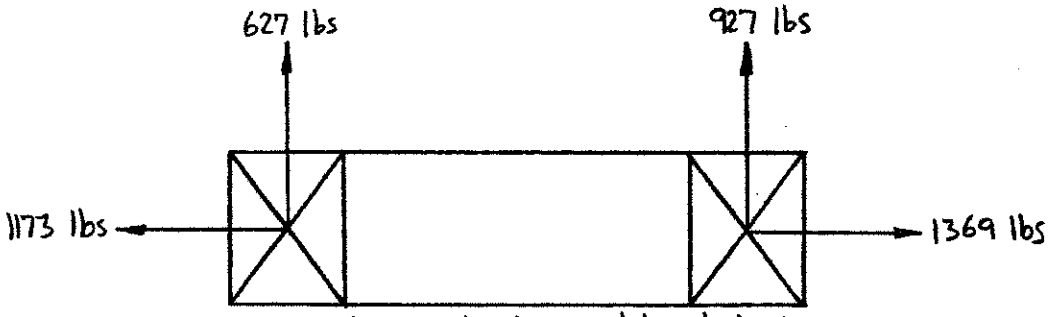

Combined Magnetic & Gravitational Loads
per 5 brackets

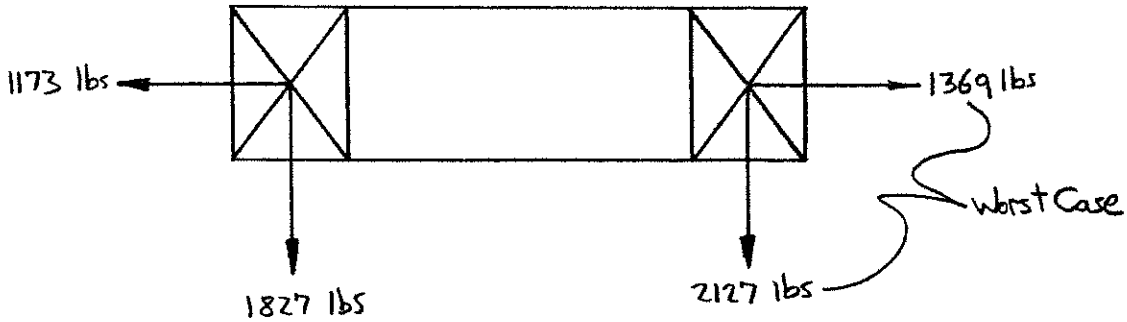

Analysis of Inner Restraint Bracket:

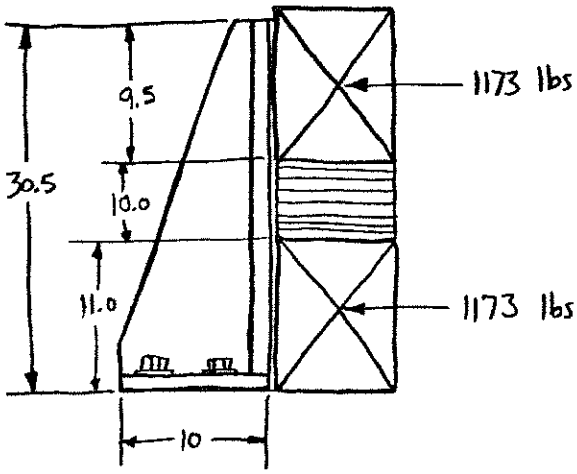

Front View

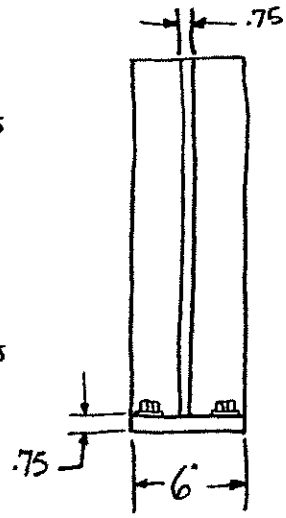

Left View

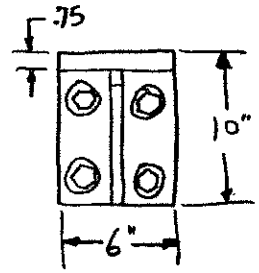

Cantilevered Beam analysis:

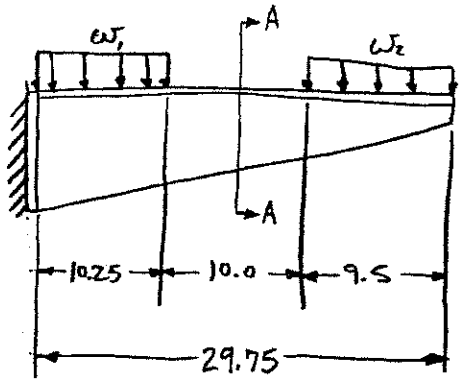

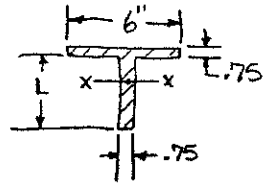

$$\omega_1 = 1173 \text{ lbs} / 10.25 = 114 \text{ lbs/in}$$

$$\omega_2 = 1173 \text{ lbs} / 9.5 \text{ in} = 123 \text{ lbs/in}$$

Set up an FEA beam model to calculate the bending moments:

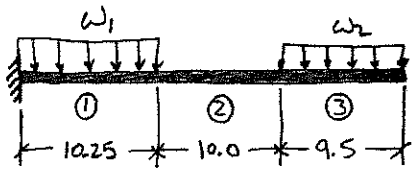

Assume: Area = 1 in^2
$I = 1 \text{ in}^4$
$c = 1 \text{ in}$
Material = Aluminum

HORIZONTAL BEAM WITH NO AXIAL LOADS: INPUT DATA aluminum beam
(MAXIMUM 25 SEGMENTS)

NUMBER OF SEGMENTS
3

SEGMENT NUMBER	SEGMENT LENGTH	MOMENT OF INERTIA	MATERIAL TYPE	BEAM AREA	ELEMENTS PER SEGMENT	UNIFORM LOAD	C
1	10.250	1.00	2	1.0	41	-114.0	1.0
2	10.000	1.00	2	1.0	40	0.0	1.0
3	9.500	1.00	2	1.0	38	-123.0	1.0

SEGMENT NUMBER	1st END Y-DISPL	1st END SLOPE	2nd END Y-DISPL	2nd END SLOPE	1st END FORCE	1st END MOMENT	2nd END FORCE	2nd END MOMENT
1	0.0	0.0	999.0	888.0	0.0	0.0	0.0	0.0
2	999.0	888.0	999.0	888.0	0.0	0.0	0.0	0.0
3	999.0	888.0	999.0	888.0	0.0	0.0	0.0	0.0

NOTES:

INTEGERS MUST NOT HAVE A DECIMAL POINT
REAL NUMBERS MUST HAVE A DECIMAL POINT

999.0 ====> FREE END CONDITION IN Y-DISPLACEMENT

888.0 ====> FREE END CONDITION IN ROTATION

SLOPE IMPLIES A FORCED CONDITION THAT CAUSED A ROTATION IN THE BEAM AT THE POINT OF APPLICATION. (DATA VALUE SHOULD BE "RISE/RUN")

THE VALUE OF "C" IS THE DISTANCE FROM THE BENDING AXIS TO THE DISTANCE WHERE STRESS IS TO BE COMPUTED. FOR MAXIMUM STRESS, THE VALUE OF "C" SHOULD BE THE DISTANCE FROM THE BENDING AXIS TO THE EXTREME FIBERS OF THE BEAM.

MATERIAL TYPE NUMBER COORESPONDS TO THE MATERIAL NUMBER LISTED IN DATA FILE: mtype.dat

THE DATA VALUES LISTED HERE ARE NOT COLUMN SENSITIVE; THEY ARE ONLY SHOWN IN COLUMNS FOR CLARITY!

ELEMENTAL MOMENTS AT	LEFT	CENTER	RIGHT
ELEMENT 1	-35200.4688	-34910.1251	-34619.7813
ELEMENT 2	-34619.7813	-34333.0001	-34046.2188
ELEMENT 3	-34046.2188	-33763.0001	-33479.7813
ELEMENT 4	-33479.7813	-33200.1251	-32920.4688
ELEMENT 5	-32920.4688	-32644.3751	-32368.2813
ELEMENT 6	-32368.2813	-32095.7501	-31823.2188
ELEMENT 7	-31823.2188	-31554.2501	-31285.2813
ELEMENT 8	-31285.2813	-31019.8751	-30754.4688
ELEMENT 9	-30754.4688	-30492.6251	-30230.7813
ELEMENT 10	-30230.7813	-29972.5001	-29714.2188
ELEMENT 11	-29714.2188	-29459.5001	-29204.7813
ELEMENT 12	-29204.7813	-28953.6251	-28702.4688
ELEMENT 13	-28702.4688	-28454.8751	-28207.2813
ELEMENT 14	-28207.2813	-27963.2501	-27719.2188
ELEMENT 15	-27719.2188	-27478.7501	-27238.2813
ELEMENT 16	-27238.2813	-27001.3751	-26764.4688
ELEMENT 17	-26764.4688	-26531.1251	-26297.7813
ELEMENT 18	-26297.7813	-26068.0001	-25838.2188
ELEMENT 19	-25838.2188	-25612.0001	-25385.7813
ELEMENT 20	-25385.7813	-25163.1251	-24940.4688
ELEMENT 21	-24940.4688	-24721.3751	-24502.2813
ELEMENT 22	-24502.2813	-24286.7501	-24071.2188
ELEMENT 23	-24071.2188	-23859.2501	-23647.2813
ELEMENT 24	-23647.2813	-23438.8751	-23230.4688
ELEMENT 25	-23230.4688	-23025.6251	-22820.7813
ELEMENT 26	-22820.7813	-22619.5001	-22418.2188
ELEMENT 27	-22418.2188	-22220.5001	-22022.7813
ELEMENT 28	-22022.7813	-21828.6251	-21634.4688
ELEMENT 29	-21634.4688	-21443.8751	-21253.2813
ELEMENT 30	-21253.2813	-21066.2501	-20879.2188
ELEMENT 31	-20879.2188	-20695.7501	-20512.2813
ELEMENT 32	-20512.2813	-20332.3751	-20152.4688
ELEMENT 33	-20152.4688	-19976.1250	-19799.7813
ELEMENT 34	-19799.7813	-19627.0000	-19454.2188
ELEMENT 35	-19454.2188	-19285.0000	-19115.7813
ELEMENT 36	-19115.7813	-18950.1250	-18784.4688
ELEMENT 37	-18784.4688	-18622.3750	-18460.2813
ELEMENT 38	-18460.2813	-18301.7500	-18143.2188
ELEMENT 39	-18143.2188	-17988.2500	-17833.2813
ELEMENT 40	-17833.2813	-17681.8750	-17530.4688
ELEMENT 41	-17530.4688	-17382.6250	-17234.7813
ELEMENT 42	-17235.3750	-17089.3125	-16943.2500
ELEMENT 43	-16943.2500	-16797.1875	-16651.1250
ELEMENT 44	-16651.1250	-16505.0625	-16359.0000
ELEMENT 45	-16359.0000	-16212.9375	-16066.8750
ELEMENT 46	-16066.8750	-15920.8125	-15774.7500
ELEMENT 47	-15774.7500	-15628.6875	-15482.6250
ELEMENT 48	-15482.6250	-15336.5625	-15190.5000
ELEMENT 49	-15190.5000	-15044.4375	-14898.3750
ELEMENT 50	-14898.3750	-14752.3125	-14606.2500
ELEMENT 51	-14606.2500	-14460.1875	-14314.1250
ELEMENT 52	-14314.1250	-14168.0625	-14022.0000
ELEMENT 53	-14022.0000	-13875.9375	-13729.8750
ELEMENT 54	-13729.8750	-13583.8125	-13437.7500
ELEMENT 55	-13437.7500	-13291.6875	-13145.6250
ELEMENT 56	-13145.6250	-12999.5625	-12853.5000
ELEMENT 57	-12853.5000	-12707.4375	-12561.3750
ELEMENT 58	-12561.3750	-12415.3125	-12269.2500

ELEMENT 59	-12269.2500	-12123.1875	-11977.1250
ELEMENT 60	-11977.1250	-11831.0625	-11685.0000
ELEMENT 61	-11685.0000	-11538.9375	-11392.8750
ELEMENT 62	-11392.8750	-11246.8125	-11100.7500
ELEMENT 63	-11100.7500	-10954.6875	-10808.6250
ELEMENT 64	-10808.6250	-10662.5625	-10516.5000
ELEMENT 65	-10516.5000	-10370.4375	-10224.3750
ELEMENT 66	-10224.3750	-10078.3125	-9932.2500
ELEMENT 67	-9932.2500	-9786.1875	-9640.1250
ELEMENT 68	-9640.1250	-9494.0625	-9348.0000
ELEMENT 69	-9348.0000	-9201.9375	-9055.8750
ELEMENT 70	-9055.8750	-8909.8125	-8763.7500
ELEMENT 71	-8763.7500	-8617.6875	-8471.6250
ELEMENT 72	-8471.6250	-8325.5625	-8179.5000
ELEMENT 73	-8179.5000	-8033.4375	-7887.3750
ELEMENT 74	-7887.3750	-7741.3125	-7595.2500
ELEMENT 75	-7595.2500	-7449.1875	-7303.1250
ELEMENT 76	-7303.1250	-7157.0625	-7011.0000
ELEMENT 77	-7011.0000	-6864.9375	-6718.8750
ELEMENT 78	-6718.8750	-6572.8125	-6426.7500
ELEMENT 79	-6426.7500	-6280.6875	-6134.6250
ELEMENT 80	-6134.6250	-5988.5625	-5842.5000
ELEMENT 81	-5842.5000	-5696.4375	-5550.3750
ELEMENT 82	-5549.7344	-5405.5938	-5261.4531
ELEMENT 83	-5261.4531	-5121.1563	-4980.8594
ELEMENT 84	-4980.8594	-4844.4063	-4707.9531
ELEMENT 85	-4707.9531	-4575.3438	-4442.7344
ELEMENT 86	-4442.7344	-4313.9688	-4185.2031
ELEMENT 87	-4185.2031	-4060.2813	-3935.3594
ELEMENT 88	-3935.3594	-3814.2813	-3693.2031
ELEMENT 89	-3693.2031	-3575.9688	-3458.7344
ELEMENT 90	-3458.7344	-3345.3438	-3231.9531
ELEMENT 91	-3231.9531	-3122.4063	-3012.8594
ELEMENT 92	-3012.8594	-2907.1563	-2801.4531
ELEMENT 93	-2801.4531	-2699.5938	-2597.7344
ELEMENT 94	-2597.7344	-2499.7188	-2401.7031
ELEMENT 95	-2401.7031	-2307.5313	-2213.3594
ELEMENT 96	-2213.3594	-2123.0313	-2032.7031
ELEMENT 97	-2032.7031	-1946.2188	-1859.7344
ELEMENT 98	-1859.7344	-1777.0938	-1694.4531
ELEMENT 99	-1694.4531	-1615.6563	-1536.8594
ELEMENT100	-1536.8594	-1461.9063	-1386.9531
ELEMENT101	-1386.9531	-1315.8438	-1244.7344
ELEMENT102	-1244.7344	-1177.4688	-1110.2031
ELEMENT103	-1110.2031	-1046.7813	-983.3594
ELEMENT104	-983.3594	-923.7813	-864.2031
ELEMENT105	-864.2031	-808.4688	-752.7344
ELEMENT106	-752.7344	-700.8438	-648.9531
ELEMENT107	-648.9531	-600.9063	-552.8594
ELEMENT108	-552.8594	-508.6563	-464.4531
ELEMENT109	-464.4531	-424.0938	-383.7344
ELEMENT110	-383.7344	-347.2188	-310.7031
ELEMENT111	-310.7031	-278.0313	-245.3594
ELEMENT112	-245.3594	-216.5313	-187.7031
ELEMENT113	-187.7031	-162.7188	-137.7344
ELEMENT114	-137.7344	-116.5938	-95.4531
ELEMENT115	-95.4531	-78.1563	-60.8594
ELEMENT116	-60.8594	-47.4062	-33.9531
ELEMENT117	-33.9531	-24.3437	-14.7344
ELEMENT118	-14.7344	-8.9688	-3.2031

Calculate the Changing C.G. Location of the Tapered Beam

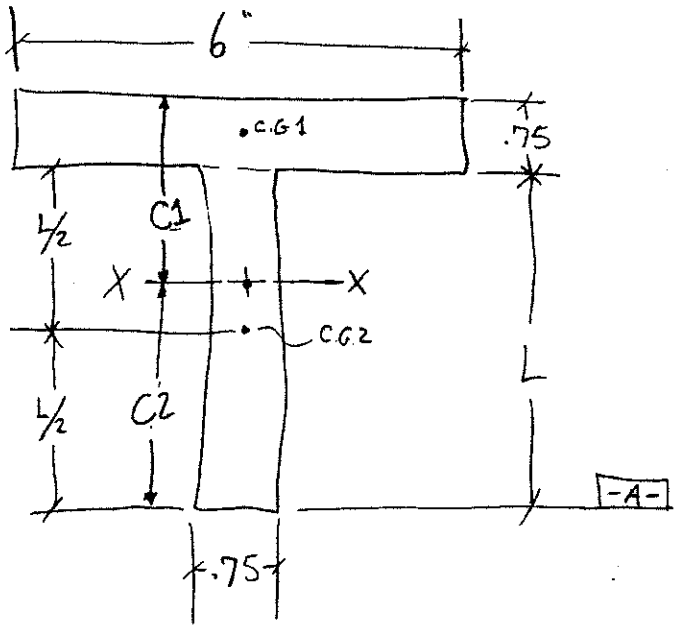

$$\Sigma M_A = (.75L)\tfrac{L}{2} + [(6)(.75)](L+.375) - [(6)(.75)+.75L]C2 = \emptyset$$

$$\frac{\frac{.75L^2}{2} + 4.5(L+.375)}{4.5 + .75L} = C2$$

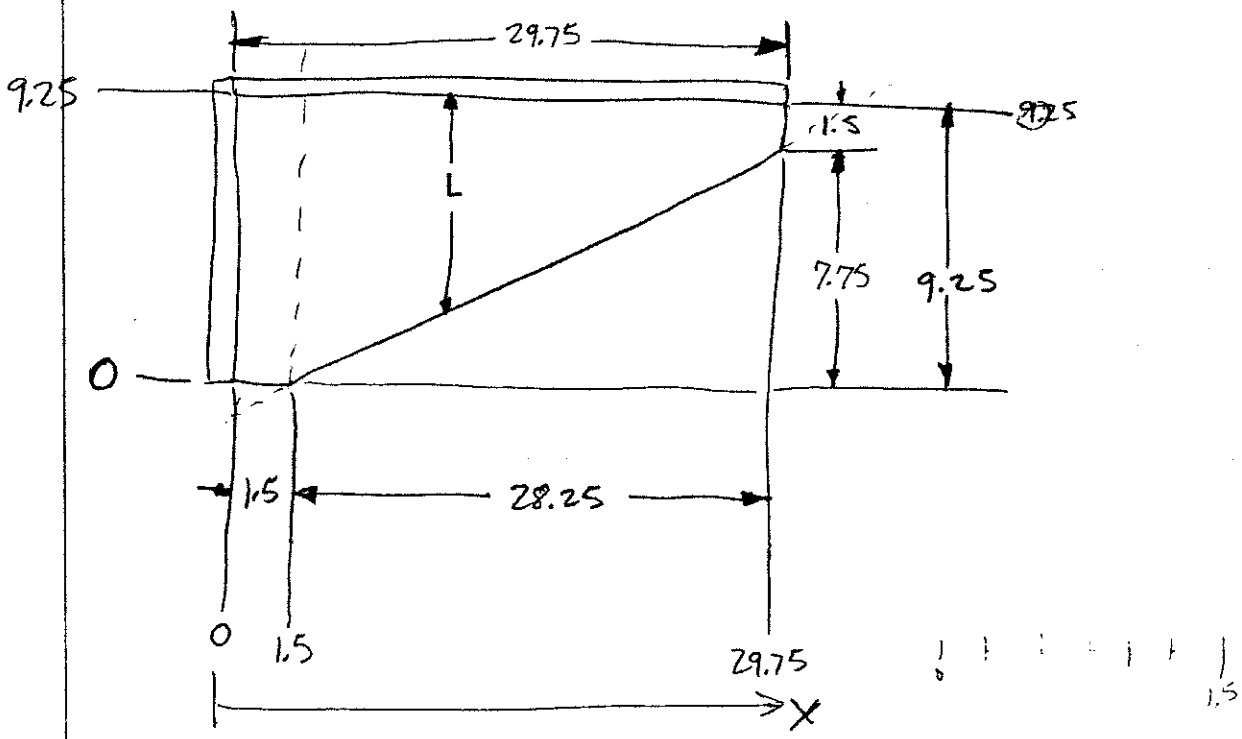

from 0–1.5, $L = 9.25$ line from $(1.5, \emptyset)$ to $(29.75, 7.75)$

$$L = mx + b$$

$$L = .274336\,X + (-.411504)$$

Moment of inertia calculation:

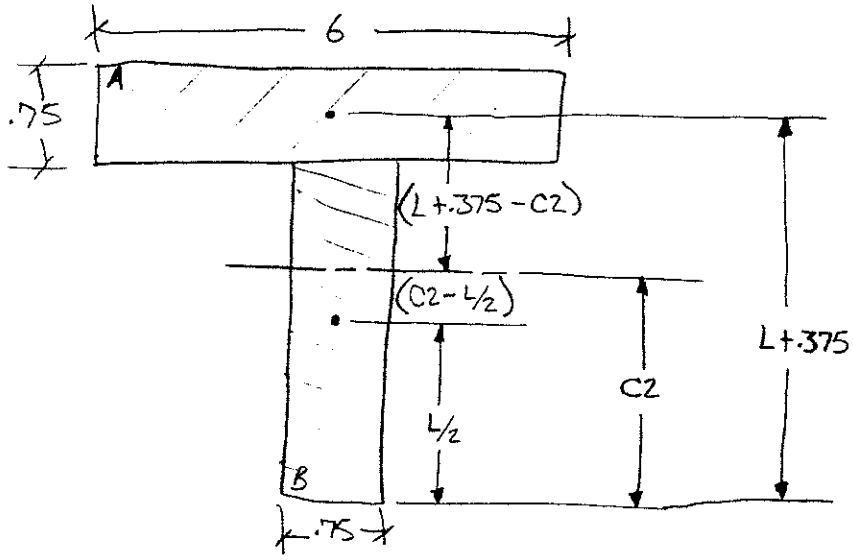

$$I_{x_A} = \frac{1}{12}(6)(.75)^3$$

$$I_{x_B} = \frac{1}{12}(.75)(L^3)$$

$$I_{total} = I_{x_A} + Area_A d_A^2 + I_{x_B} + Area_B d_B^2$$

$$I_{total} = I_{x_A} + (6)(.75)(L+.375-C_2)^2 + I_{x_B} + (.75)(L)(C2-L/2)^2$$

$$\sigma_{Bending} = \frac{(M)(C2)}{I_{total}}$$

The moments must now be calculated. An FEA beam analysis program will be used to calculate the bending moments.

E872 MU SWEEP II MAGNET INNER RESTRAINT COIL BRACKET ANALSYSIS

$i := 1..120 \qquad j := 7..120 \qquad k := 1..6$

$x_k := -.25 + .25 \cdot k$

$x_j := 1.25 + .25 \cdot (j - 6)$ (X ranges from 1.5 to 29.75 in increments of .25")

$L_k := 9.25$

$L_j := 9.25 - (.274336 \cdot x_j - .411504)$

Distance from neutral axis to extreme fiber; 2 cases

$$C2_i := \frac{\frac{.75 \cdot (L_i)^2}{2} + 4.5 \cdot (L_i + .375)}{4.5 + .75 \cdot L_i}$$

$C1_i := L_i + .75 - C2_i$

The value of C2 is always larger than C1. Therefore, C2 will be used as the distance from neutral axis to the extreme fiber in bending stess calculations.

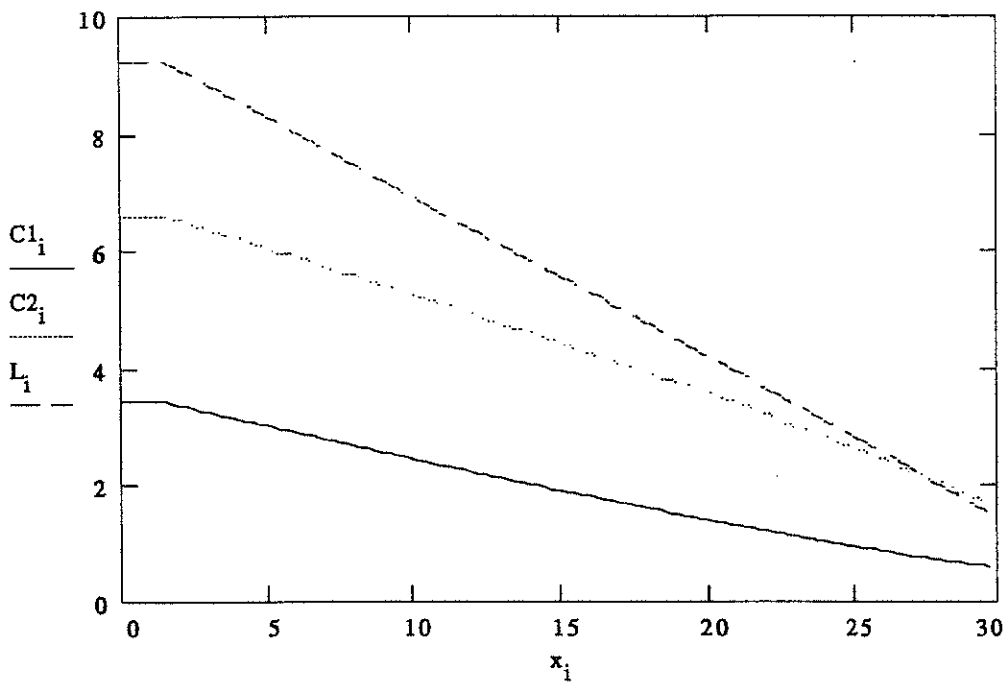

Moment of inertia Calculation (see attached sketches for more details)

$$I_{A_i} := \frac{1}{12} \cdot 6 \cdot .75^3 \qquad I_{B_i} := \frac{1}{12} \cdot .75 \cdot (L_i)^3$$

$$I_{total_i} := I_{A_i} + 6 \cdot .75 \cdot (L_i + .375 - C2_i)^2 + I_{B_i} + .75 \cdot L_i \cdot \left(C2_i - \frac{L_i}{2}\right)^2$$

$m := 1..40$

m	x_m	L_m	$C2_m$	I_{total_m}
1	0	9.25	6.592	117.914
2	0.25	9.25	6.592	117.914
3	0.5	9.25	6.592	117.914
4	0.75	9.25	6.592	117.914
5	1	9.25	6.592	117.914
6	1.25	9.25	6.592	117.914
7	1.5	9.25	6.592	117.914
8	1.75	9.181	6.553	115.692
9	2	9.113	6.514	113.496
10	2.25	9.044	6.475	111.327
11	2.5	8.976	6.436	109.183
12	2.75	8.907	6.397	107.065
13	3	8.838	6.358	104.973
14	3.25	8.77	6.319	102.907
15	3.5	8.701	6.279	100.866
16	3.75	8.633	6.24	98.85
17	4	8.564	6.201	96.86
18	4.25	8.496	6.161	94.895
19	4.5	8.427	6.122	92.955
20	4.75	8.358	6.082	91.039
21	5	8.29	6.043	89.149
22	5.25	8.221	6.003	87.283
23	5.5	8.153	5.963	85.441
24	5.75	8.084	5.924	83.624
25	6	8.015	5.884	81.831
26	6.25	7.947	5.844	80.062
27	6.5	7.878	5.804	78.318
28	6.75	7.81	5.764	76.596
29	7	7.741	5.724	74.899
30	7.25	7.673	5.684	73.225
31	7.5	7.604	5.644	71.575
32	7.75	7.535	5.604	69.948
33	8	7.467	5.564	68.344
34	8.25	7.398	5.524	66.763
35	8.5	7.33	5.483	65.205
36	8.75	7.261	5.443	63.67
37	9	7.192	5.402	62.158
38	9.25	7.124	5.362	60.668
39	9.5	7.055	5.321	59.2
40	9.75	6.987	5.281	57.754

$n := 41..80$

n	x_n	L_n	$C2_n$	I_{total_n}
41	10	6.918	5.24	56.331
42	10.25	6.85	5.199	54.93
43	10.5	6.781	5.158	53.55
44	10.75	6.712	5.117	52.193
45	11	6.644	5.076	50.856
46	11.25	6.575	5.035	49.542
47	11.5	6.507	4.994	48.248
48	11.75	6.438	4.953	46.976
49	12	6.369	4.911	45.725
50	12.25	6.301	4.87	44.494
51	12.5	6.232	4.829	43.285
52	12.75	6.164	4.787	42.096
53	13	6.095	4.745	40.927
54	13.25	6.027	4.704	39.779
55	13.5	5.958	4.662	38.651
56	13.75	5.889	4.62	37.543
57	14	5.821	4.578	36.455
58	14.25	5.752	4.536	35.387
59	14.5	5.684	4.494	34.338
60	14.75	5.615	4.452	33.309
61	15	5.546	4.409	32.3
62	15.25	5.478	4.367	31.309
63	15.5	5.409	4.324	30.338
64	15.75	5.341	4.282	29.386
65	16	5.272	4.239	28.452
66	16.25	5.204	4.196	27.537
67	16.5	5.135	4.153	26.641
68	16.75	5.066	4.11	25.763
69	17	4.998	4.067	24.903
70	17.25	4.929	4.024	24.061
71	17.5	4.861	3.98	23.238
72	17.75	4.792	3.937	22.432
73	18	4.723	3.893	21.643
74	18.25	4.655	3.849	20.872
75	18.5	4.586	3.805	20.119
76	18.75	4.518	3.761	19.383
77	19	4.449	3.717	18.663
78	19.25	4.381	3.673	17.961
79	19.5	4.312	3.629	17.275
80	19.75	4.243	3.584	16.606

$o := 81 .. 120$

o	x_o	L_o	$C2_o$	I_{total_o}
81	20	4.175	3.539	15.954
82	20.25	4.106	3.495	15.318
83	20.5	4.038	3.45	14.697
84	20.75	3.969	3.405	14.093
85	21	3.9	3.359	13.505
86	21.25	3.832	3.314	12.932
87	21.5	3.763	3.268	12.375
88	21.75	3.695	3.223	11.833
89	22	3.626	3.177	11.306
90	22.25	3.558	3.131	10.795
91	22.5	3.489	3.085	10.298
92	22.75	3.42	3.038	9.816
93	23	3.352	2.992	9.348
94	23.25	3.283	2.945	8.895
95	23.5	3.215	2.898	8.456
96	23.75	3.146	2.851	8.031
97	24	3.077	2.804	7.62
98	24.25	3.009	2.756	7.222
99	24.5	2.94	2.708	6.838
100	24.75	2.872	2.661	6.467
101	25	2.803	2.612	6.11
102	25.25	2.735	2.564	5.765
103	25.5	2.666	2.516	5.434
104	25.75	2.597	2.467	5.114
105	26	2.529	2.418	4.807
106	26.25	2.46	2.368	4.513
107	26.5	2.392	2.319	4.23
108	26.75	2.323	2.269	3.96
109	27	2.254	2.219	3.701
110	27.25	2.186	2.169	3.453
111	27.5	2.117	2.118	3.217
112	27.75	2.049	2.067	2.991
113	28	1.98	2.016	2.777
114	28.25	1.912	1.965	2.573
115	28.5	1.843	1.913	2.379
116	28.75	1.774	1.861	2.196
117	29	1.706	1.809	2.023
118	29.25	1.637	1.756	1.86
119	29.5	1.569	1.703	1.706
120	29.75	1.5	1.65	1.561

Bending Stress on Inner Restraint Tapered Beam:

Distance from Support (in)	Moment (in-lbs)	C (in)	I (in^4)	$\sigma_{Bending}$ (psi)
element 1, left	Ø	35,200	6.592	117.9	1,968
element 20, right	5	24,940	6.043	89.15	1,691
element 40, right	10	17,530	5.24	56.33	1,631
element 60, right	15	11,685	4.41	32.3	1,595
element 80, right	20	5,843	3.54	15.95	1,297
element 100, right	25	1387	2.61	6.11	592
element 119, right	29.75	Ø	1.65	1.56	Ø

The bending stresses are much more than adequate but the extra strength will help minimize deflections. Deflection calculations are intentionally left out because they would be meaningless. This is because as the bracket starts to deflect, the coil pack stiffness will limit deflections and will, itself, start to hold back the load. This bracket appears to be oversized, but its design is dictated by functionallity; i.e. the slots for bracket adjustment force the base to be 10" long. Due to this robust design, the weld need not be calculated. By engineering intuition, a 5/16" fillet weld around most of the bracket with a 5/16" groove weld (ground flat) against the coil will be more than adequate.

Bolt Analysis on Inner Restraint Bracket:

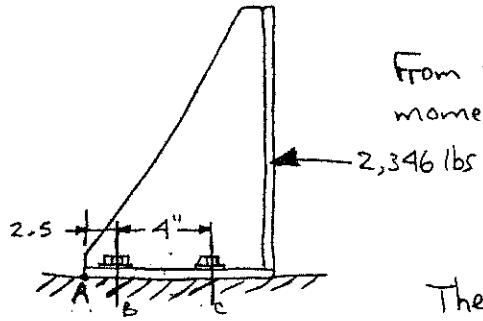

From the FEM analysis, the calculated moment at the base is:

$$M = 35{,}200 \text{ in-lbs}$$

There are 4, 3/4" Bolts keeping this bracket from moving. The bolts must take the tension caused by the moment and also the shear force of 2,346 lbs.

Tension developed from the moment:

The bracket tries to pivot at point "A" but is resisted by the bolts at "B" and "C".

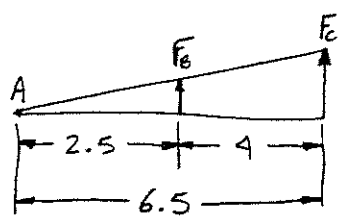

$$\frac{F_B}{2.5} = \frac{F_C}{6.5}$$

$$F_B = \frac{2.5}{6.5} F_C = .3846\, F_C$$

$$\Sigma M_A = 2.5 F_B + 6.5 F_C - 35{,}200 \text{ in-lbs} = \emptyset$$

$$(2.5)(.3846) F_C + 6.5 F_C = 35{,}200$$

$$F_C = \frac{35{,}200}{7.4615} = 4{,}718 \text{ lbs}/2 \text{ Bolts at "C"}$$

The maximum tensile load in this connection is: 2,359 lbs

$$\sigma_t = \frac{F_t}{A_g} = \frac{2{,}359 \text{ lbs}}{\pi (3/8)^2} = 5340 \text{ psi}$$

Shear per Bolt: $\tau_v = \frac{F_v}{A_g} = \frac{2{,}346 \text{ lbs}}{(4)(\pi)(3/8)^2} = 1{,}328 \text{ psi}$

Combined Shear and tension: (Mohr's Circle)

$$\left.\begin{array}{l} \sigma_t = 5{,}340 \text{ psi} \\ \tau_v = 1{,}328 \text{ psi} \end{array}\right\} \quad \begin{array}{l} \sigma_{max} = 5{,}652 \text{ psi} \\ \sigma_{min} = -312 \text{ psi} \end{array} \qquad \tau_{max} = 2{,}982 \text{ psi} \qquad \underline{\underline{OK}}$$

Table 3.3.27
Allowable Stresses for BUILDING and Similar Type Structures

6061—T6, —T651, —T6510, —T6511

Extrusions up thru 1 in., Sheet & Plate, Standard Structural Shapes, Rolled Rod and Bar, Drawn Tube, Pipe

6351-T5 Extrusions

Type of Stress	Type of Member or Component	Spec. No.	Allowable Stress, ksi	
TENSION, axial, net section	Any tension member	1	19	11①
TENSION IN BEAMS, - extreme fiber, net section	Rectangular tubes, structural shapes bent about strong axis	2	19	11①
	Round or oval tubes	3	24	13.5①
	Shapes bent about weak axis, rectangular bars, plates.	4	28	16①
BEARING	On rivets and bolts	5	34	18①
	On flat surfaces and pins and on bolts in slotted holes	6	23	12①

			Allowable Stress, ksi, Slenderness ≤ S_1	Slenderness Limit, S_1	Allowable Stress, ksi Slenderness Between S_1 and S_2	Slenderness Limit, S_2	Allowable Stress, ksi Slenderness ≥ S_2
COMPRESSION IN COLUMNS, axial, gross section	All columns	7	19	$\frac{L}{r} = 9.5$	$20.2-0.126\frac{L}{r}$	$\frac{L}{r} = 66$	$\frac{51,000}{(L/r)^2}$
			12①	— — —	12①	$\frac{L}{r} = 65$①	$\frac{51,000}{(L/r)^2}$
COMPRESSION IN COMPONENTS OF COLUMNS, gross section	Outstanding flanges and legs	8	19	$\frac{b}{t} = 5.2$	$23.1-0.79\frac{b}{t}$	$\frac{b}{t} = 12$	$\frac{1,970}{(b/t)^2}$
			12①	— — —	12①	$\frac{b}{t} = 13$①	$\frac{1,970}{(b/t)^2}$
	Flat plates with both edges supported	9	19	$\frac{b}{t} = 16$	$23.1-0.25\frac{b}{t}$	$\frac{b}{t} = 33$	$\frac{490}{(b/t)}$
			12①	— — —	12①	$\frac{b}{t} = 41$①	$\frac{490}{(b/t)}$
	Curved plates supported on both edges, walls of round or oval tubes	10	19	$\frac{R}{t} = 16$	$22.2-0.80\sqrt{\frac{R}{t}}$	$\frac{R}{t} = 141$	$\frac{3,200}{(R/t)(1+\sqrt{R/t}/35)^2}$
			12①	$\frac{R}{t} = 9.0$①	$13.5-0.50\sqrt{\frac{R}{t}}$	$\frac{R}{t} = 290$	$\frac{3,200}{(R/t)(1+\sqrt{R/t}/35)^2}$
COMPRESSION IN BEAMS, extreme fiber, gross section	Single web beams bent about strong axis	11	21	$\frac{L_b}{r_y} = 23$	$23.9-0.124\frac{L_b}{r_y}$	$\frac{L_b}{r_y} = 79$	$\frac{87,000}{(L_b/r_y)^2}$
			12①	— — —	12①	$\frac{L_b}{r_y} = 85$①	$\frac{87,000}{(L_b/r_y)^2}$
	Round or oval tubes	12	25	$\frac{R_b}{t} = 28$	$39.3-2.7\sqrt{\frac{R_b}{t}}$	$\frac{R_b}{t} = 81$	Same as Specification No. 10 (See Par. 3.4.12)
			14①	$\frac{R_b}{t} = 51$①	$23.9-1.39\sqrt{\frac{R_b}{t}}$	$\frac{R_b}{t} = 137$	Same as Specification No. 10 (See Par. 3.4.12)
	Solid rectangular beams	13	28	$\frac{d}{t}\sqrt{\frac{L_b}{d}} = 13$	$40.5-0.93\frac{d}{t}\sqrt{\frac{L_b}{d}}$	$\frac{d}{t}\sqrt{\frac{L_b}{d}} = 29$	$\frac{11,400}{(d/t)^2(L_b/d)}$
			16①	$\frac{d}{t}\sqrt{\frac{L_b}{d}} = 26$①	$40.5-0.93\frac{d}{t}\sqrt{\frac{L_b}{d}}$	$\frac{d}{t}\sqrt{\frac{L_b}{d}} = 29$	$\frac{11,400}{(d/t)^2(L_b/d)}$
	Rectangular tubes and box sections	14	21	$\frac{L_bS_c}{I_y} = 146$	$23.9-0.24\sqrt{\frac{L_bS_c}{I_y}}$	$\frac{L_bS_c}{I_y} = 1700$	$\frac{24,000}{(L_bS_c/I_y)}$
			12①	— — —	12①	$\frac{L_bS_c}{I_y} = 2000$①	$\frac{24,000}{(L_bS_c/I_y)}$
COMPRESSION IN COMPONENTS OF BEAMS, (component under uniform compression), gross section	Outstanding flanges	15	21	$\frac{b}{t} = 6.8$	$27.3-0.93\frac{b}{t}$	$\frac{b}{t} = 10$	$\frac{182}{(b/t)}$
			12①	— — —	12①	$\frac{b}{t} = 15$①	$\frac{182}{(b/t)}$
	Flat plates with both edges supported	16	21	$\frac{b}{t} = 22$	$27.3-0.29\frac{b}{t}$	$\frac{b}{t} = 33$	$\frac{580}{(b/t)}$
			12①	— — —	12①	$\frac{b}{t} = 49$①	$\frac{580}{(b/t)}$
COMPRESSION IN COMPONENTS OF BEAMS, (component under bending in own plane), gross section	Flat plates with compression edge free, tension edge supported	17	28	$\frac{b}{t} = 8.9$	$40.5-1.41\frac{b}{t}$	$\frac{b}{t} = 19$	$\frac{4,900}{(b/t)^2}$
			16①	$\frac{b}{t} = 17$①	$40.5-1.41\frac{b}{t}$	$\frac{b}{t} = 19$	$\frac{4,900}{(b/t)^2}$
	Flat plates with both edges supported	18	28	$\frac{h}{t} = 46$	$40.5-0.27\frac{h}{t}$	$\frac{h}{t} = 75$	$\frac{1,520}{(h/t)}$
			16①	— — —	16①	$\frac{h}{t} = 95$①	$\frac{1,520}{(h/t)}$
	Flat plates with horizontal stiffener, both edges supported	19	28	$\frac{h}{t} = 107$	$40.5-0.117\frac{h}{t}$	$\frac{h}{t} = 173$	$\frac{3,500}{(h/t)}$
			16①	— — —	16①	$\frac{h}{t} = 219$①	$\frac{3,500}{(h/t)}$
SHEAR IN WEBS, gross section	Unstiffened flat webs	20	12	$\frac{h}{t} = 36$	$15.6-0.099\frac{h}{t}$	$\frac{h}{t} = 65$	$\frac{39,000}{(h/t)^2}$
			7.5①	— — —	7.5①	$\frac{h}{t} = 72$①	$\frac{39,000}{(h/t)^2}$
	Stiffened flat webs $a_e = a_1\Big/\sqrt{1+0.7(a_1/a_2)^2}$	21	12	— — —	12	$\frac{a_e}{t} = 66$	$\frac{53,000}{(a_e/t)^2}$
			7.5①	— — —	7.5①	$\frac{a_e}{t} = 84$①	$\frac{53,000}{(a_e/t)^2}$

WHITE BARS apply to nonwelded members and to welded members at locations farther than 1.0 in. from a weld. SHADED BARS apply within 1.0 in. of a weld.

① For all thicknesses with filler alloys 5356 or 5556. With filler alloys 4043, 5554 or 5654 values apply to metal 0.375 in. or less in thickness; for greater thicknesses multiply allowable stresses by 0.8.

② For all thicknesses with filler alloys 5356 or 5556; for metal 0.375 in. or less in thickness with filler alloys 4043, 5554 or 5654.

Outer Bracket Restraint Strap:

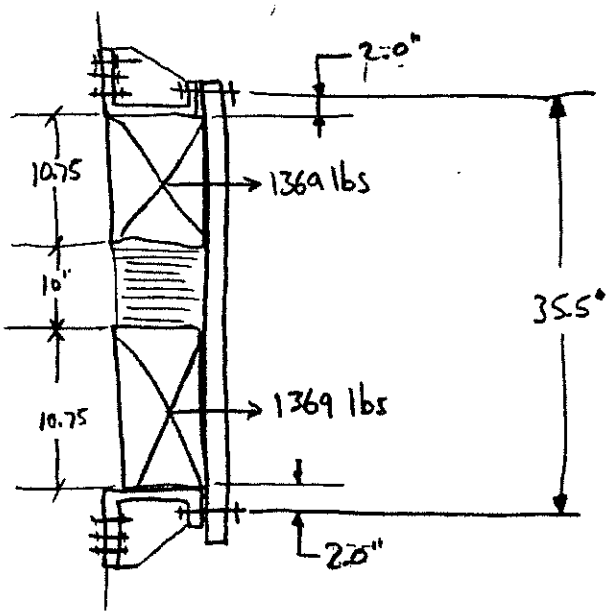

Analyze as a simply supported beam:

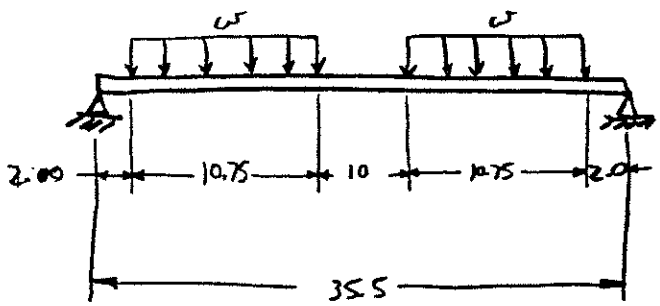

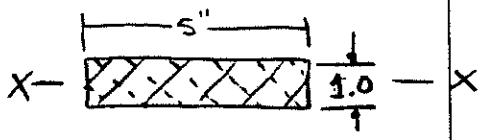

$I_x = \frac{1}{12}(5)(1.0)^3 = .41667 \text{ in}^4$

$c = .5$ "

$Area = 5.00 \text{ in}^2$

$w = 1369 \text{ lbs} / 10.75" = 127.35 \text{ lbs/in}$

$\delta_{max} = .348"$ (Not realistic, Coil stiffness limits deflection)

$M_{max} = 10{,}096$ in-lbs

$\sigma_{max_{bending}} = 12{,}110$ psi $\qquad \sigma_{all} = 28{,}000$ psi

* Results from attached FEM for beam analysis
see attached results

HORIZONTAL BEAM WITH NO AXIAL LOADS: INPUT DATA aluminum strap
(MAXIMUM 25 SEGMENTS)

NUMBER OF SEGMENTS
5

SEGMENT NUMBER	SEGMENT LENGTH	MOMENT OF INERTIA	MATERIAL TYPE	BEAM AREA	ELEMENTS PER SEGMENT	UNIFORM LOAD	C
1	2.000	0.4167	2	5.000	5	0.00	0.50
2	10.75	0.4167	2	5.000	15	-127.35	0.50
3	10.00	0.4167	2	5.000	15	0.00	0.50
4	10.75	0.4167	2	5.000	15	-127.35	0.50
5	2.000	0.4167	2	5.000	5	0.00	0.50

SEGMENT NUMBER	1st END Y-DISPL	1st END SLOPE	2nd END Y-DISPL	2nd END SLOPE	1st END FORCE	1st END MOMENT	2nd END FORCE	2nd END MOMENT
1	0.0	888.0	999.0	888.0	0.0	0.0	0.0	0.0
2	999.0	888.0	999.0	888.0	0.0	0.0	0.0	0.0
3	999.0	888.0	999.0	888.0	0.0	0.0	0.0	0.0
4	999.0	888.0	999.0	888.0	0.0	0.0	0.0	0.0
5	999.0	888.0	0.0	888.0	0.0	0.0	0.0	0.0

NOTES:

INTEGERS MUST NOT HAVE A DECIMAL POINT
REAL NUMBERS MUST HAVE A DECIMAL POINT

999.0 ====> FREE END CONDITION IN Y-DISPLACEMENT

888.0 ====> FREE END CONDITION IN ROTATION

SLOPE IMPLIES A FORCED CONDITION THAT CAUSED A ROTATION IN THE BEAM AT THE POINT OF APPLICATION. (DATA VALUE SHOULD BE "RISE/RUN")

THE VALUE OF "C" IS THE DISTANCE FROM THE BENDING AXIS TO THE DISTANCE WHERE STRESS IS TO BE COMPUTED. FOR MAXIMUM STRESS, THE VALUE OF "C" SHOULD BE THE DISTANCE FROM THE BENDING AXIS TO THE EXTREME FIBERS OF THE BEAM.

MATERIAL TYPE NUMBER COORESPONDS TO THE MATERIAL NUMBER LISTED IN DATA FILE: mtype.dat

THE DATA VALUES LISTED HERE ARE NOT COLUMN SENSITIVE; THEY ARE ONLY SHOWN IN COLUMNS FOR CLARITY!

HORIZONTAL BEAM ANALYSIS USING FEM TECHNIQUES

NODE	GLOBAL COORDINATE
1	0.0000
2	0.4000
3	0.8000
4	1.2000
5	1.6000
6	2.0000
7	2.7167
8	3.4333
9	4.1500
10	4.8667
11	5.5833
12	6.3000
13	7.0167
14	7.7333
15	8.4500
16	9.1667
17	9.8833
18	10.6000
19	11.3167
20	12.0333
21	12.7500
22	13.4167
23	14.0833
24	14.7500
25	15.4167
26	16.0833
27	16.7500
28	17.4167
29	18.0833
30	18.7500
31	19.4167
32	20.0833
33	20.7500
34	21.4167
35	22.0833
36	22.7500
37	23.4667
38	24.1833
39	24.9000
40	25.6167
41	26.3333
42	27.0500
43	27.7667
44	28.4833
45	29.2000
46	29.9167
47	30.6333
48	31.3500
49	32.0667
50	32.7833
51	33.5000
52	33.9000
53	34.3000
54	34.7000

55	35.1000
56	35.5000

ELEM NO.	NODAL CONNECTIVITY		INERTIA	EMOD	SPWT	XNU
1	1	2	.417E+00	0.1000E+08	0.000255	.3000
2	2	3	.417E+00	0.1000E+08	0.000255	.3000
3	3	4	.417E+00	0.1000E+08	0.000255	.3000
4	4	5	.417E+00	0.1000E+08	0.000255	.3000
5	5	6	.417E+00	0.1000E+08	0.000255	.3000
6	6	7	.417E+00	0.1000E+08	0.000255	.3000
7	7	8	.417E+00	0.1000E+08	0.000255	.3000
8	8	9	.417E+00	0.1000E+08	0.000255	.3000
9	9	10	.417E+00	0.1000E+08	0.000255	.3000
10	10	11	.417E+00	0.1000E+08	0.000255	.3000
11	11	12	.417E+00	0.1000E+08	0.000255	.3000
12	12	13	.417E+00	0.1000E+08	0.000255	.3000
13	13	14	.417E+00	0.1000E+08	0.000255	.3000
14	14	15	.417E+00	0.1000E+08	0.000255	.3000
15	15	16	.417E+00	0.1000E+08	0.000255	.3000
16	16	17	.417E+00	0.1000E+08	0.000255	.3000
17	17	18	.417E+00	0.1000E+08	0.000255	.3000
18	18	19	.417E+00	0.1000E+08	0.000255	.3000
19	19	20	.417E+00	0.1000E+08	0.000255	.3000
20	20	21	.417E+00	0.1000E+08	0.000255	.3000
21	21	22	.417E+00	0.1000E+08	0.000255	.3000
22	22	23	.417E+00	0.1000E+08	0.000255	.3000
23	23	24	.417E+00	0.1000E+08	0.000255	.3000
24	24	25	.417E+00	0.1000E+08	0.000255	.3000
25	25	26	.417E+00	0.1000E+08	0.000255	.3000
26	26	27	.417E+00	0.1000E+08	0.000255	.3000
27	27	28	.417E+00	0.1000E+08	0.000255	.3000
28	28	29	.417E+00	0.1000E+08	0.000255	.3000
29	29	30	.417E+00	0.1000E+08	0.000255	.3000
30	30	31	.417E+00	0.1000E+08	0.000255	.3000
31	31	32	.417E+00	0.1000E+08	0.000255	.3000
32	32	33	.417E+00	0.1000E+08	0.000255	.3000
33	33	34	.417E+00	0.1000E+08	0.000255	.3000
34	34	35	.417E+00	0.1000E+08	0.000255	.3000
35	35	36	.417E+00	0.1000E+08	0.000255	.3000
36	36	37	.417E+00	0.1000E+08	0.000255	.3000
37	37	38	.417E+00	0.1000E+08	0.000255	.3000
38	38	39	.417E+00	0.1000E+08	0.000255	.3000
39	39	40	.417E+00	0.1000E+08	0.000255	.3000
40	40	41	.417E+00	0.1000E+08	0.000255	.3000
41	41	42	.417E+00	0.1000E+08	0.000255	.3000
42	42	43	.417E+00	0.1000E+08	0.000255	.3000
43	43	44	.417E+00	0.1000E+08	0.000255	.3000
44	44	45	.417E+00	0.1000E+08	0.000255	.3000
45	45	46	.417E+00	0.1000E+08	0.000255	.3000
46	46	47	.417E+00	0.1000E+08	0.000255	.3000
47	47	48	.417E+00	0.1000E+08	0.000255	.3000
48	48	49	.417E+00	0.1000E+08	0.000255	.3000
49	49	50	.417E+00	0.1000E+08	0.000255	.3000
50	50	51	.417E+00	0.1000E+08	0.000255	.3000
51	51	52	.417E+00	0.1000E+08	0.000255	.3000
52	52	53	.417E+00	0.1000E+08	0.000255	.3000
53	53	54	.417E+00	0.1000E+08	0.000255	.3000

54	54	55	.417E+00	0.1000E+08	0.000255	.3000
55	55	56	.417E+00	0.1000E+08	0.000255	.3000

NODAL DISPLACEMENTS	Y-DISPL	SLOPE
NODE 1	0.000000	-0.032491
NODE 2	-0.012993	-0.032465
NODE 3	-0.025965	-0.032386
NODE 4	-0.038894	-0.032254
NODE 5	-0.051761	-0.032070
NODE 6	-0.064544	-0.031834
NODE 7	-0.087169	-0.031280
NODE 8	-0.109341	-0.030570
NODE 9	-0.130951	-0.029712
NODE 10	-0.151897	-0.028720
NODE 11	-0.172087	-0.027604
NODE 12	-0.191436	-0.026376
NODE 13	-0.209869	-0.025046
NODE 14	-0.227315	-0.023627
NODE 15	-0.243715	-0.022129
NODE 16	-0.259016	-0.020563
NODE 17	-0.273175	-0.018941
NODE 18	-0.286154	-0.017274
NODE 19	-0.297925	-0.015573
NODE 20	-0.308469	-0.013849
NODE 21	-0.317774	-0.012115
NODE 22	-0.325312	-0.010499
NODE 23	-0.331773	-0.008884
NODE 24	-0.337157	-0.007269
NODE 25	-0.341465	-0.005654
NODE 26	-0.344695	-0.004038
NODE 27	-0.346849	-0.002423
NODE 28	-0.347926	-0.000808
NODE 29	-0.347926	0.000808
NODE 30	-0.346849	0.002423
NODE 31	-0.344695	0.004038
NODE 32	-0.341465	0.005654
NODE 33	-0.337157	0.007269
NODE 34	-0.331773	0.008884
NODE 35	-0.325312	0.010499
NODE 36	-0.317774	0.012115
NODE 37	-0.308469	0.013849
NODE 38	-0.297925	0.015573
NODE 39	-0.286154	0.017274
NODE 40	-0.273175	0.018941
NODE 41	-0.259016	0.020563
NODE 42	-0.243715	0.022129
NODE 43	-0.227315	0.023627
NODE 44	-0.209869	0.025046
NODE 45	-0.191436	0.026376
NODE 46	-0.172087	0.027604
NODE 47	-0.151897	0.028720
NODE 48	-0.130951	0.029712
NODE 49	-0.109341	0.030570
NODE 50	-0.087169	0.031280
NODE 51	-0.064544	0.031834
NODE 52	-0.051761	0.032070
NODE 53	-0.038894	0.032254
NODE 54	-0.025965	0.032386

NODE 55	-0.012993	0.032465
NODE 56	0.000000	0.032491

NODAL REACTIONS	Y-FORCE	MOMENT
NODE 1	1369.0125	0.0000
NODE 2	0.0000	0.0000
NODE 3	0.0000	0.0000
NODE 4	0.0000	0.0000
NODE 5	0.0000	0.0000
NODE 6	0.0000	0.0000
NODE 7	0.0000	0.0000
NODE 8	0.0000	0.0000
NODE 9	0.0000	0.0000
NODE 10	0.0000	0.0000
NODE 11	0.0000	0.0000
NODE 12	0.0000	0.0000
NODE 13	0.0000	0.0000
NODE 14	0.0000	0.0000
NODE 15	0.0000	0.0000
NODE 16	0.0000	0.0000
NODE 17	0.0000	0.0000
NODE 18	0.0000	0.0000
NODE 19	0.0000	0.0000
NODE 20	0.0000	0.0000
NODE 21	0.0000	0.0000
NODE 22	0.0000	0.0000
NODE 23	0.0000	0.0000
NODE 24	0.0000	0.0000
NODE 25	0.0000	0.0000
NODE 26	0.0000	0.0000
NODE 27	0.0000	0.0000
NODE 28	0.0000	0.0000
NODE 29	0.0000	0.0000
NODE 30	0.0000	0.0000
NODE 31	0.0000	0.0000
NODE 32	0.0000	0.0000
NODE 33	0.0000	0.0000
NODE 34	0.0000	0.0000
NODE 35	0.0000	0.0000
NODE 36	0.0000	0.0000
NODE 37	0.0000	0.0000
NODE 38	0.0000	0.0000
NODE 39	0.0000	0.0000
NODE 40	0.0000	0.0000
NODE 41	0.0000	0.0000
NODE 42	0.0000	0.0000
NODE 43	0.0000	0.0000
NODE 44	0.0000	0.0000
NODE 45	0.0000	0.0000
NODE 46	0.0000	0.0000
NODE 47	0.0000	0.0000
NODE 48	0.0000	0.0000
NODE 49	0.0000	0.0000
NODE 50	0.0000	0.0000
NODE 51	0.0000	0.0000
NODE 52	0.0000	0.0000
NODE 53	0.0000	0.0000
NODE 54	0.0000	0.0000

NODE 55	0.0000	0.0000
NODE 56	1369.0125	0.0000

ELEMENTAL SHEAR FORCES	LEFT	CENTER	RIGHT
ELEMENT 1	-1369.0125	1369.0125	1369.0125
ELEMENT 2	-1369.0125	1369.0125	1369.0125
ELEMENT 3	-1369.0125	1369.0125	1369.0125
ELEMENT 4	-1369.0125	1369.0125	1369.0125
ELEMENT 5	-1369.0125	1369.0125	1369.0125
ELEMENT 6	-1369.0125	1323.3788	1277.7450
ELEMENT 7	-1277.7450	1232.1113	1186.4775
ELEMENT 8	-1186.4775	1140.8438	1095.2100
ELEMENT 9	-1095.2100	1049.5763	1003.9425
ELEMENT 10	-1003.9425	958.3088	912.6750
ELEMENT 11	-912.6750	867.0413	821.4075
ELEMENT 12	-821.4075	775.7738	730.1400
ELEMENT 13	-730.1400	684.5063	638.8725
ELEMENT 14	-638.8725	593.2388	547.6050
ELEMENT 15	-547.6050	501.9713	456.3375
ELEMENT 16	-456.3375	410.7038	365.0700
ELEMENT 17	-365.0700	319.4363	273.8025
ELEMENT 18	-273.8025	228.1688	182.5350
ELEMENT 19	-182.5350	136.9013	91.2675
ELEMENT 20	-91.2675	45.6338	0.0000
ELEMENT 21	0.0000	0.0000	0.0000
ELEMENT 22	0.0000	0.0000	0.0000
ELEMENT 23	0.0000	0.0000	0.0000
ELEMENT 24	0.0000	0.0000	0.0000
ELEMENT 25	0.0000	0.0000	0.0000
ELEMENT 26	0.0000	0.0000	0.0000
ELEMENT 27	0.0000	0.0000	0.0000
ELEMENT 28	0.0000	0.0000	0.0000
ELEMENT 29	0.0000	0.0000	0.0000
ELEMENT 30	0.0000	0.0000	0.0000
ELEMENT 31	0.0000	0.0000	0.0000
ELEMENT 32	0.0000	0.0000	0.0000
ELEMENT 33	0.0000	0.0000	0.0000
ELEMENT 34	0.0000	0.0000	0.0000
ELEMENT 35	0.0000	0.0000	0.0000
ELEMENT 36	0.0000	-45.6338	-91.2675
ELEMENT 37	91.2675	-136.9013	-182.5350
ELEMENT 38	182.5350	-228.1688	-273.8025
ELEMENT 39	273.8025	-319.4363	-365.0700
ELEMENT 40	365.0700	-410.7038	-456.3375
ELEMENT 41	456.3375	-501.9713	-547.6050
ELEMENT 42	547.6050	-593.2388	-638.8725
ELEMENT 43	638.8725	-684.5063	-730.1400
ELEMENT 44	730.1400	-775.7738	-821.4075
ELEMENT 45	821.4075	-867.0413	-912.6750
ELEMENT 46	912.6750	-958.3088	-1003.9425
ELEMENT 47	1003.9425	-1049.5763	-1095.2100
ELEMENT 48	1095.2100	-1140.8438	-1186.4775
ELEMENT 49	1186.4775	-1232.1113	-1277.7450
ELEMENT 50	1277.7450	-1323.3788	-1369.0125
ELEMENT 51	1369.0125	-1369.0125	-1369.0125
ELEMENT 52	1369.0125	-1369.0125	-1369.0125
ELEMENT 53	1369.0125	-1369.0125	-1369.0125
ELEMENT 54	1369.0125	1369.0125	1369.0125

ELEMENT 55	1369.0125	-1369.0125	-1369.0125

ELEMENTAL MOMENTS AT	LEFT	CENTER	RIGHT
ELEMENT 1	0.0000	273.8025	547.6050
ELEMENT 2	547.6050	821.4075	1095.2100
ELEMENT 3	1095.2100	1369.0125	1642.8150
ELEMENT 4	1642.8150	1916.6175	2190.4200
ELEMENT 5	2190.4200	2464.2225	2738.0250
ELEMENT 6	2743.4757	3217.6864	3691.8971
ELEMENT 7	3691.8971	4133.4037	4574.9102
ELEMENT 8	4574.9102	4983.7125	5392.5149
ELEMENT 9	5392.5149	5768.6130	6144.7112
ELEMENT 10	6144.7112	6488.1052	6831.4991
ELEMENT 11	6831.4991	7142.1889	7452.8787
ELEMENT 12	7452.8787	7730.8643	8008.8499
ELEMENT 13	8008.8499	8254.1313	8499.4127
ELEMENT 14	8499.4127	8711.9899	8924.5671
ELEMENT 15	8924.5671	9104.4402	9284.3132
ELEMENT 16	9284.3132	9431.4820	9578.6509
ELEMENT 17	9578.6509	9693.1155	9807.5802
ELEMENT 18	9807.5802	9889.3407	9971.1011
ELEMENT 19	9971.1011	10020.1574	10069.2137
ELEMENT 20	10069.2137	10085.5658	10101.9179
ELEMENT 21	10096.4672	10096.4672	10096.4672
ELEMENT 22	10096.4672	10096.4672	10096.4672
ELEMENT 23	10096.4672	10096.4672	10096.4672
ELEMENT 24	10096.4672	10096.4672	10096.4672
ELEMENT 25	10096.4672	10096.4672	10096.4672
ELEMENT 26	10096.4672	10096.4672	10096.4672
ELEMENT 27	10096.4672	10096.4672	10096.4672
ELEMENT 28	10096.4672	10096.4672	10096.4672
ELEMENT 29	10096.4672	10096.4672	10096.4672
ELEMENT 30	10096.4672	10096.4672	10096.4672
ELEMENT 31	10096.4672	10096.4672	10096.4672
ELEMENT 32	10096.4672	10096.4672	10096.4672
ELEMENT 33	10096.4672	10096.4672	10096.4672
ELEMENT 34	10096.4672	10096.4672	10096.4672
ELEMENT 35	10096.4672	10096.4672	10096.4672
ELEMENT 36	10101.9179	10085.5658	10069.2137
ELEMENT 37	10069.2137	10020.1574	9971.1011
ELEMENT 38	9971.1011	9889.3407	9807.5802
ELEMENT 39	9807.5802	9693.1155	9578.6509
ELEMENT 40	9578.6509	9431.4820	9284.3132
ELEMENT 41	9284.3132	9104.4402	8924.5671
ELEMENT 42	8924.5671	8711.9899	8499.4127
ELEMENT 43	8499.4127	8254.1313	8008.8499
ELEMENT 44	8008.8499	7730.8643	7452.8787
ELEMENT 45	7452.8787	7142.1889	6831.4991
ELEMENT 46	6831.4991	6488.1052	6144.7112
ELEMENT 47	6144.7112	5768.6130	5392.5149
ELEMENT 48	5392.5149	4983.7125	4574.9102
ELEMENT 49	4574.9102	4133.4037	3691.8971
ELEMENT 50	3691.8971	3217.6864	2743.4757
ELEMENT 51	2738.0250	2464.2225	2190.4200
ELEMENT 52	2190.4200	1916.6175	1642.8150
ELEMENT 53	1642.8150	1369.0125	1095.2100
ELEMENT 54	1095.2100	821.4075	547.6050
ELEMENT 55	547.6050	273.8025	0.0000

ELEMENT STRAIN	LEFT	CENTER	RIGHT
ELEMENT 1	0.0000E+00	0.3285E-04	0.6571E-04
ELEMENT 2	0.6571E-04	0.9856E-04	0.1314E-03
ELEMENT 3	0.1314E-03	0.1643E-03	0.1971E-03
ELEMENT 4	0.1971E-03	0.2300E-03	0.2628E-03
ELEMENT 5	0.2628E-03	0.2957E-03	0.3285E-03
ELEMENT 6	0.3292E-03	0.3861E-03	0.4430E-03
ELEMENT 7	0.4430E-03	0.4960E-03	0.5489E-03
ELEMENT 8	0.5489E-03	0.5980E-03	0.6471E-03
ELEMENT 9	0.6471E-03	0.6922E-03	0.7373E-03
ELEMENT 10	0.7373E-03	0.7785E-03	0.8197E-03
ELEMENT 11	0.8197E-03	0.8570E-03	0.8943E-03
ELEMENT 12	0.8943E-03	0.9276E-03	0.9610E-03
ELEMENT 13	0.9610E-03	0.9904E-03	0.1020E-02
ELEMENT 14	0.1020E-02	0.1045E-02	0.1071E-02
ELEMENT 15	0.1071E-02	0.1092E-02	0.1114E-02
ELEMENT 16	0.1114E-02	0.1132E-02	0.1149E-02
ELEMENT 17	0.1149E-02	0.1163E-02	0.1177E-02
ELEMENT 18	0.1177E-02	0.1187E-02	0.1196E-02
ELEMENT 19	0.1196E-02	0.1202E-02	0.1208E-02
ELEMENT 20	0.1208E-02	0.1210E-02	0.1212E-02
ELEMENT 21	0.1211E-02	0.1211E-02	0.1211E-02
ELEMENT 22	0.1211E-02	0.1211E-02	0.1211E-02
ELEMENT 23	0.1211E-02	0.1211E-02	0.1211E-02
ELEMENT 24	0.1211E-02	0.1211E-02	0.1211E-02
ELEMENT 25	0.1211E-02	0.1211E-02	0.1211E-02
ELEMENT 26	0.1211E-02	0.1211E-02	0.1211E-02
ELEMENT 27	0.1211E-02	0.1211E-02	0.1211E-02
ELEMENT 28	0.1211E-02	0.1211E-02	0.1211E-02
ELEMENT 29	0.1211E-02	0.1211E-02	0.1211E-02
ELEMENT 30	0.1211E-02	0.1211E-02	0.1211E-02
ELEMENT 31	0.1211E-02	0.1211E-02	0.1211E-02
ELEMENT 32	0.1211E-02	0.1211E-02	0.1211E-02
ELEMENT 33	0.1211E-02	0.1211E-02	0.1211E-02
ELEMENT 34	0.1211E-02	0.1211E-02	0.1211E-02
ELEMENT 35	0.1211E-02	0.1211E-02	0.1211E-02
ELEMENT 36	0.1212E-02	0.1210E-02	0.1208E-02
ELEMENT 37	0.1208E-02	0.1202E-02	0.1196E-02
ELEMENT 38	0.1196E-02	0.1187E-02	0.1177E-02
ELEMENT 39	0.1177E-02	0.1163E-02	0.1149E-02
ELEMENT 40	0.1149E-02	0.1132E-02	0.1114E-02
ELEMENT 41	0.1114E-02	0.1092E-02	0.1071E-02
ELEMENT 42	0.1071E-02	0.1045E-02	0.1020E-02
ELEMENT 43	0.1020E-02	0.9904E-03	0.9610E-03
ELEMENT 44	0.9610E-03	0.9276E-03	0.8943E-03
ELEMENT 45	0.8943E-03	0.8570E-03	0.8197E-03
ELEMENT 46	0.8197E-03	0.7785E-03	0.7373E-03
ELEMENT 47	0.7373E-03	0.6922E-03	0.6471E-03
ELEMENT 48	0.6471E-03	0.5980E-03	0.5489E-03
ELEMENT 49	0.5489E-03	0.4960E-03	0.4430E-03
ELEMENT 50	0.4430E-03	0.3861E-03	0.3292E-03
ELEMENT 51	0.3285E-03	0.2957E-03	0.2628E-03
ELEMENT 52	0.2628E-03	0.2300E-03	0.1971E-03
ELEMENT 53	0.1971E-03	0.1643E-03	0.1314E-03
ELEMENT 54	0.1314E-03	0.9856E-04	0.6571E-04
ELEMENT 55	0.6571E-04	0.3285E-04	0.0000E+00

ELEMENT BENDING STRESS	LEFT	CENTER	RIGHT
ELEMENT 1	0.0000E+00	0.3285E+03	0.6571E+03
ELEMENT 2	0.6571E+03	0.9856E+03	0.1314E+04
ELEMENT 3	0.1314E+04	0.1643E+04	0.1971E+04
ELEMENT 4	0.1971E+04	0.2300E+04	0.2628E+04
ELEMENT 5	0.2628E+04	0.2957E+04	0.3285E+04
ELEMENT 6	0.3292E+04	0.3861E+04	0.4430E+04
ELEMENT 7	0.4430E+04	0.4960E+04	0.5489E+04
ELEMENT 8	0.5489E+04	0.5980E+04	0.6471E+04
ELEMENT 9	0.6471E+04	0.6922E+04	0.7373E+04
ELEMENT 10	0.7373E+04	0.7785E+04	0.8197E+04
ELEMENT 11	0.8197E+04	0.8570E+04	0.8943E+04
ELEMENT 12	0.8943E+04	0.9276E+04	0.9610E+04
ELEMENT 13	0.9610E+04	0.9904E+04	0.1020E+05
ELEMENT 14	0.1020E+05	0.1045E+05	0.1071E+05
ELEMENT 15	0.1071E+05	0.1092E+05	0.1114E+05
ELEMENT 16	0.1114E+05	0.1132E+05	0.1149E+05
ELEMENT 17	0.1149E+05	0.1163E+05	0.1177E+05
ELEMENT 18	0.1177E+05	0.1187E+05	0.1196E+05
ELEMENT 19	0.1196E+05	0.1202E+05	0.1208E+05
ELEMENT 20	0.1208E+05	0.1210E+05	0.1212E+05
ELEMENT 21	0.1211E+05	0.1211E+05	0.1211E+05
ELEMENT 22	0.1211E+05	0.1211E+05	0.1211E+05
ELEMENT 23	0.1211E+05	0.1211E+05	0.1211E+05
ELEMENT 24	0.1211E+05	0.1211E+05	0.1211E+05
ELEMENT 25	0.1211E+05	0.1211E+05	0.1211E+05
ELEMENT 26	0.1211E+05	0.1211E+05	0.1211E+05
ELEMENT 27	0.1211E+05	0.1211E+05	0.1211E+05
ELEMENT 28	0.1211E+05	0.1211E+05	0.1211E+05
ELEMENT 29	0.1211E+05	0.1211E+05	0.1211E+05
ELEMENT 30	0.1211E+05	0.1211E+05	0.1211E+05
ELEMENT 31	0.1211E+05	0.1211E+05	0.1211E+05
ELEMENT 32	0.1211E+05	0.1211E+05	0.1211E+05
ELEMENT 33	0.1211E+05	0.1211E+05	0.1211E+05
ELEMENT 34	0.1211E+05	0.1211E+05	0.1211E+05
ELEMENT 35	0.1211E+05	0.1211E+05	0.1211E+05
ELEMENT 36	0.1212E+05	0.1210E+05	0.1208E+05
ELEMENT 37	0.1208E+05	0.1202E+05	0.1196E+05
ELEMENT 38	0.1196E+05	0.1187E+05	0.1177E+05
ELEMENT 39	0.1177E+05	0.1163E+05	0.1149E+05
ELEMENT 40	0.1149E+05	0.1132E+05	0.1114E+05
ELEMENT 41	0.1114E+05	0.1092E+05	0.1071E+05
ELEMENT 42	0.1071E+05	0.1045E+05	0.1020E+05
ELEMENT 43	0.1020E+05	0.9904E+04	0.9610E+04
ELEMENT 44	0.9610E+04	0.9276E+04	0.8943E+04
ELEMENT 45	0.8943E+04	0.8570E+04	0.8197E+04
ELEMENT 46	0.8197E+04	0.7785E+04	0.7373E+04
ELEMENT 47	0.7373E+04	0.6922E+04	0.6471E+04
ELEMENT 48	0.6471E+04	0.5980E+04	0.5489E+04
ELEMENT 49	0.5489E+04	0.4960E+04	0.4430E+04
ELEMENT 50	0.4430E+04	0.3861E+04	0.3292E+04
ELEMENT 51	0.3285E+04	0.2957E+04	0.2628E+04
ELEMENT 52	0.2628E+04	0.2300E+04	0.1971E+04
ELEMENT 53	0.1971E+04	0.1643E+04	0.1314E+04
ELEMENT 54	0.1314E+04	0.9856E+03	0.6571E+03
ELEMENT 55	0.6571E+03	0.3285E+03	0.0000E+00

ELEMENT SHEAR STRESS	LEFT	CENTER	RIGHT
ELEMENT 1	0.2738E+03	0.2738E+03	0.2738E+03
ELEMENT 2	0.2738E+03	0.2738E+03	0.2738E+03
ELEMENT 3	0.2738E+03	0.2738E+03	0.2738E+03
ELEMENT 4	0.2738E+03	0.2738E+03	0.2738E+03
ELEMENT 5	0.2738E+03	0.2738E+03	0.2738E+03
ELEMENT 6	0.2738E+03	0.2647E+03	0.2555E+03
ELEMENT 7	0.2555E+03	0.2464E+03	0.2373E+03
ELEMENT 8	0.2373E+03	0.2282E+03	0.2190E+03
ELEMENT 9	0.2190E+03	0.2099E+03	0.2008E+03
ELEMENT 10	0.2008E+03	0.1917E+03	0.1825E+03
ELEMENT 11	0.1825E+03	0.1734E+03	0.1643E+03
ELEMENT 12	0.1643E+03	0.1552E+03	0.1460E+03
ELEMENT 13	0.1460E+03	0.1369E+03	0.1278E+03
ELEMENT 14	0.1278E+03	0.1186E+03	0.1095E+03
ELEMENT 15	0.1095E+03	0.1004E+03	0.9127E+02
ELEMENT 16	0.9127E+02	0.8214E+02	0.7301E+02
ELEMENT 17	0.7301E+02	0.6389E+02	0.5476E+02
ELEMENT 18	0.5476E+02	0.4563E+02	0.3651E+02
ELEMENT 19	0.3651E+02	0.2738E+02	0.1825E+02
ELEMENT 20	0.1825E+02	0.9127E+01	0.5060E-08
ELEMENT 21	0.7683E-09	0.4831E-09	0.7683E-09
ELEMENT 22	0.2177E-08	0.2079E-08	0.2177E-08
ELEMENT 23	0.1548E-08	0.1757E-08	0.1548E-08
ELEMENT 24	0.1770E-08	0.1859E-08	0.1770E-08
ELEMENT 25	0.2125E-08	0.3535E-08	0.2125E-08
ELEMENT 26	0.3539E-08	0.3974E-08	0.3539E-08
ELEMENT 27	0.4949E-08	0.5808E-08	0.4949E-08
ELEMENT 28	0.4417E-08	0.3692E-08	0.4417E-08
ELEMENT 29	0.9488E-09	0.1877E-08	0.9488E-09
ELEMENT 30	0.2229E-08	0.6294E-09	0.2229E-08
ELEMENT 31	0.1595E-08	0.1625E-08	0.1595E-08
ELEMENT 32	0.7101E-09	0.1552E-08	0.7101E-09
ELEMENT 33	0.6054E-09	0.3659E-09	0.6054E-09
ELEMENT 34	0.1350E-08	0.5562E-09	0.1350E-08
ELEMENT 35	0.8848E-09	0.9368E-09	0.8848E-09
ELEMENT 36	0.2545E-08	0.9127E+01	0.1825E+02
ELEMENT 37	0.1825E+02	0.2738E+02	0.3651E+02
ELEMENT 38	0.3651E+02	0.4563E+02	0.5476E+02
ELEMENT 39	0.5476E+02	0.6389E+02	0.7301E+02
ELEMENT 40	0.7301E+02	0.8214E+02	0.9127E+02
ELEMENT 41	0.9127E+02	0.1004E+03	0.1095E+03
ELEMENT 42	0.1095E+03	0.1186E+03	0.1278E+03
ELEMENT 43	0.1278E+03	0.1369E+03	0.1460E+03
ELEMENT 44	0.1460E+03	0.1552E+03	0.1643E+03
ELEMENT 45	0.1643E+03	0.1734E+03	0.1825E+03
ELEMENT 46	0.1825E+03	0.1917E+03	0.2008E+03
ELEMENT 47	0.2008E+03	0.2099E+03	0.2190E+03
ELEMENT 48	0.2190E+03	0.2282E+03	0.2373E+03
ELEMENT 49	0.2373E+03	0.2464E+03	0.2555E+03
ELEMENT 50	0.2555E+03	0.2647E+03	0.2738E+03
ELEMENT 51	0.2738E+03	0.2738E+03	0.2738E+03
ELEMENT 52	0.2738E+03	0.2738E+03	0.2738E+03
ELEMENT 53	0.2738E+03	0.2738E+03	0.2738E+03
ELEMENT 54	0.2738E+03	0.2738E+03	0.2738E+03
ELEMENT 55	0.2738E+03	0.2738E+03	0.2738E+03

Lower, Outer Restraint Bracket: Bolt Calculations

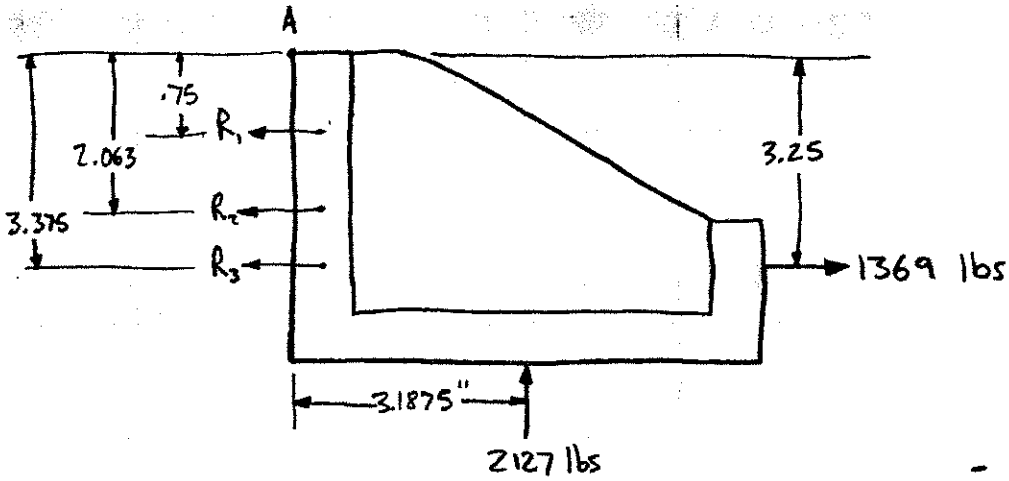

Reaction Loads R_1, R_2, and R_3 are taken by 2, ½-13 bolts at each point (Bolts are 18-8 S.S. $F_y = 30{,}000$ psi)

Calculate the bolt tensions (R_1, R_2, R_3)

Assume a linear deflection as follows

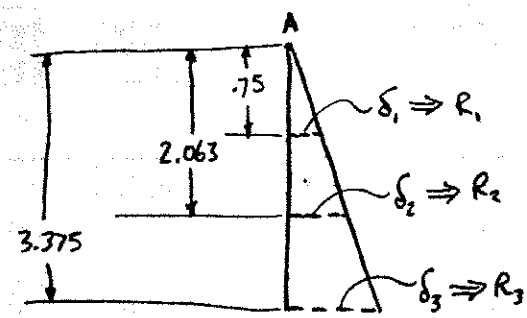

$$\frac{R_1}{.75} = \frac{R_2}{2.063} = \frac{R_3}{3.375}$$

$$R_1 = \frac{.75}{3.375} R_3 = .222\, R_3$$

$$R_2 = \frac{2.063}{3.375} R_3 = .611\, R_3$$

$$\Sigma M_A = (2127 \text{ lbs})(3.1875") + (1369 \text{ lbs})(3.25") - (.222\, R_3)(.75") - (.611\, R_3)(2.063") - (R_3)(3.375) = \emptyset$$

$$11{,}229 \text{ in-lbs} = 4.802\, R_3$$

$$R_3 = 2{,}338 \text{ lbs}/2 \text{ bolts} = \underline{1169 \text{ lbs tension (MAX)}}$$

(½-13 S.S. Bolt)

$$\sigma_t = \frac{F}{A_g} = \frac{1169 \text{ lbs}}{\pi(.25)^2} = \frac{1169}{.1964} = 5{,}955 \text{ psi}$$

Shear on Restraint bracket bolts:

6, 1/2-13 UNC, 18-8 S.S bolts will see a shear load of

$$2127 \text{ lbs}/6 \text{ bolts} = 354.5 \text{ lbs/bolt}$$

$$\tau_v = \frac{F}{A_j} = \frac{354.5 \text{ lbs}}{\pi (.25)^2} = 1805 \text{ psi}$$

Combined shear and tension by Mohr's circle yields:

$$\left.\begin{aligned} \sigma_t &= 5{,}955 \text{ psi} \\ \tau_v &= 1805 \text{ psi} \end{aligned}\right\} \quad \begin{aligned} \sigma_{max} &= 6{,}459 \text{ psi} \\ \sigma_{min} &= -504.4 \text{ psi} \\ \tau_{max} &= 3{,}482 \text{ psi} \end{aligned}$$

Calculate the factor of Safety on these bolts:

$$\left.\begin{aligned} \frac{F_y}{\sigma_{max}} &= \frac{30{,}000}{6459} = 4.6 \\ \frac{F_y/2}{\tau_{max}} &= \frac{15{,}000}{3{,}482} = 8.6 \end{aligned}\right\} \text{ more than adequate}$$

MECHANICAL AND QUALITY REQUIREMENTS FOR STAINLESS STEEL AND NONFERROUS BOLTS, SCREWS, STUDS AND NUTS

MECHANICAL REQUIREMENTS FOR BOLTS, SCREWS, STUDS AND NUTS

Grade[1]	General Description	Mechanical Requirements							
		Bolts, Screws and Studs						Nuts	
		Full Size Bolts, Screws, Studs		Machined Test Specimens of Bolts, Screws, Studs			Hardness Rockwell	Proof Load Stress	Hardness Rockwell
		Yield[2] Strength Min psi	Tensile Strength Min psi	Yield[2] Strength Min psi	Tensile Strength Min psi	Elongation[3] % Min	Min	psi	Min
303-A	Austenitic Stainless Steel-Sol. Annealed	30,000	75,000	30,000	75,000	20	B75	75,000	B75
304-A	Austenitic Stainless Steel-Sol. Annealed	30,000	75,000	30,000	75,000	20	B75	75,000	B75
304	Austenitic Stainless Steel-Cold Worked	50,000	90,000	45,000	85,000	20	B85	90,000	B85
304-SH	Austenitic Stainless Steel-Strain Hardened	See Note 6	See Note 6	See Note 6	See Note 6	15	C25	See Note 6	C20
305-A	Austenitic Stainless Steel-Sol. Annealed	30,000	75,000	30,000	75,000	20	B70	75,000	B70
305	Austenitic Stainless Steel-Cold Worked	50,000	90,000	45,000	85,000	20	B85	90,000	B85
305-SH	Austenitic Stainless Steel-Strain Hardened	See Note 6	See Note 6	See Note 6	See Note 6	15	C25	See Note 6	C20
316-A	Austenitic Stainless Steel-Sol. Annealed	30,000	75,000	30,000	75,000	20	B70	75,000	B70
316	Austenitic Stainless Steel-Cold Worked	50,000	90,000	45,000	85,000	20	B85	90,000	B85
316-SH	Austenitic Stainless Steel-Strain Hardened	See Note 6	See Note 6	See Note 6	See Note 6	15	C25	See Note 6	C20
XM7-A	Austenitic Stainless Steel-Sol. Annealed	30,000	75,000	30,000	75,000	20	B70	75,000	B70
XM7	Austenitic Stainless Steel-Cold Worked	50,000	90,000	45,000	85,000	20	B85	90,000	B85
384-A	Austenitic Stainless Steel-Sol. Annealed	30,000	75,000	30,000	75,000	20	B70	75,000	B70
384	Austenitic Stainless Steel-Cold Worked	50,000	90,000	45,000	85,000	20	B85	90,000	B85
410-H	Martensitic Stainless Steel-Hardened and Tempered	95,000	125,000	95,000	125,000	20	C22	125,000	C22
410-HT	Martensitic Stainless Steel-Hardened and Tempered	135,000	180,000	135,000	180,000	12	C36	180,000	C36

(continued)

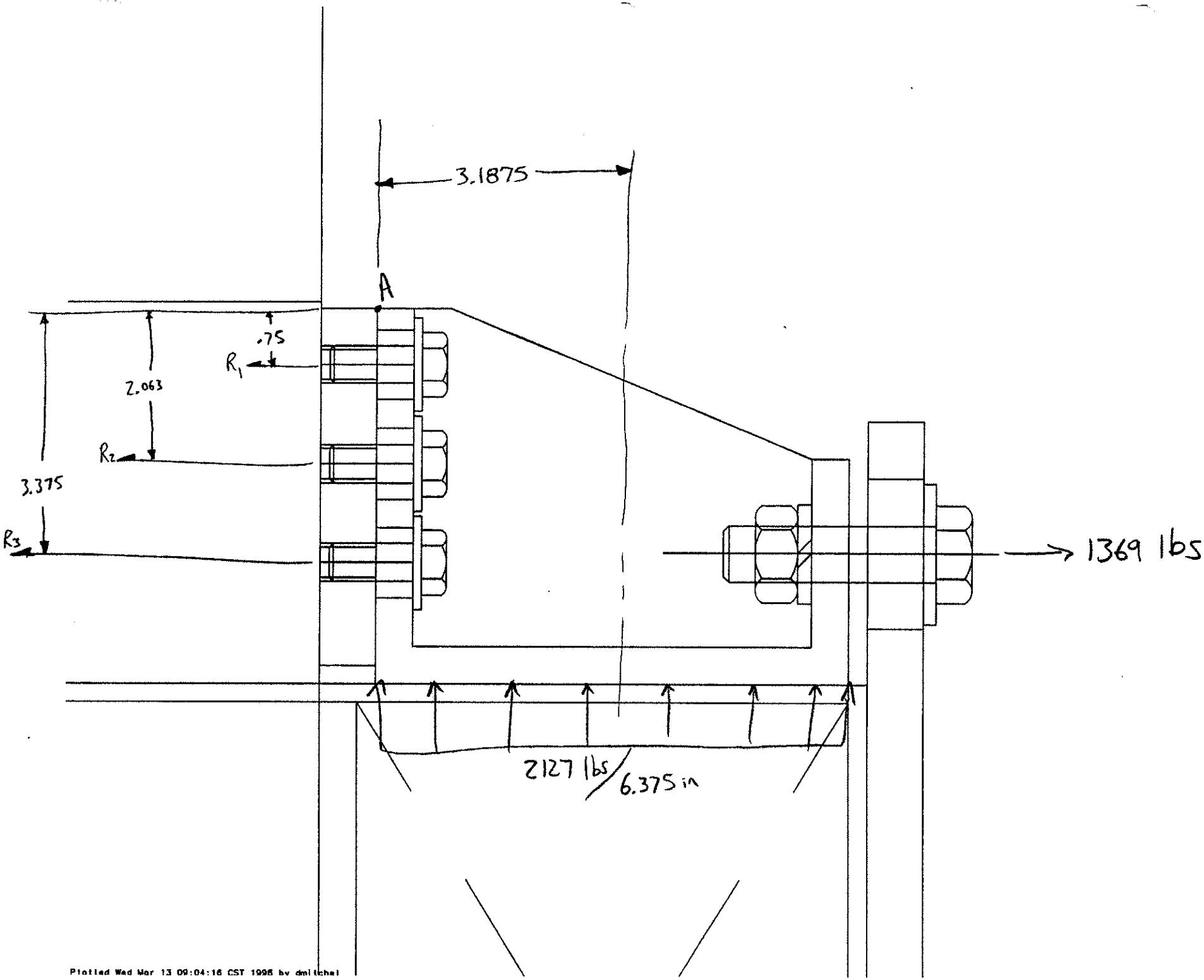
3.1875
A
.75
R_1
2.063
R_2
3.375
R_3
1369 lbs
2127 lbs/6.375 in

Analyze the restraint Bracket for bending at the bolted Connection: (at the 3/4" ϕ connection with strap)

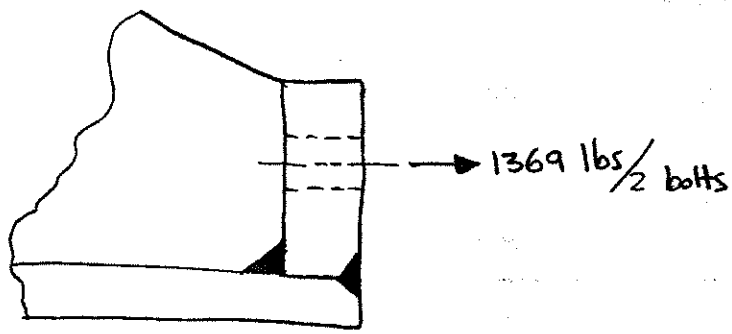

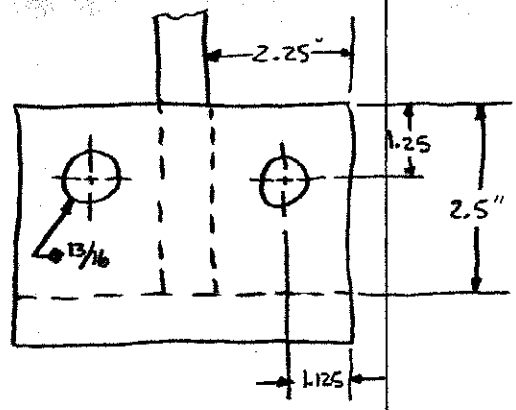

Analyze with an FEA model:

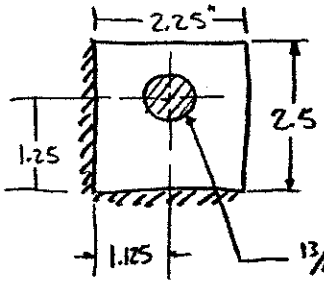

1/2" Thick aluminum plate (6061-T6)

with uniform load of $\frac{1369}{2}$ lbs = 684.5 lbs

This load corresponds to a pressure of:

$$\frac{684.5 \text{ lbs}}{\pi (13/32)^2} = 1320 \text{ psi}$$

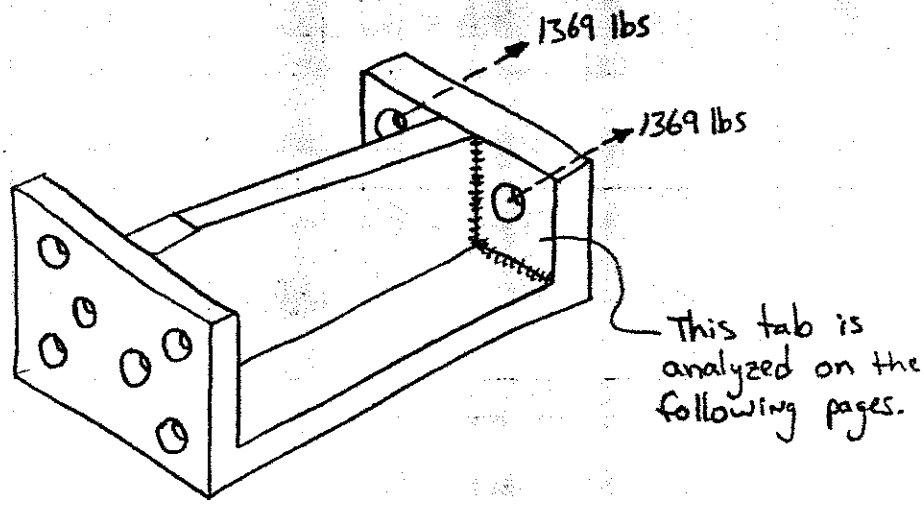

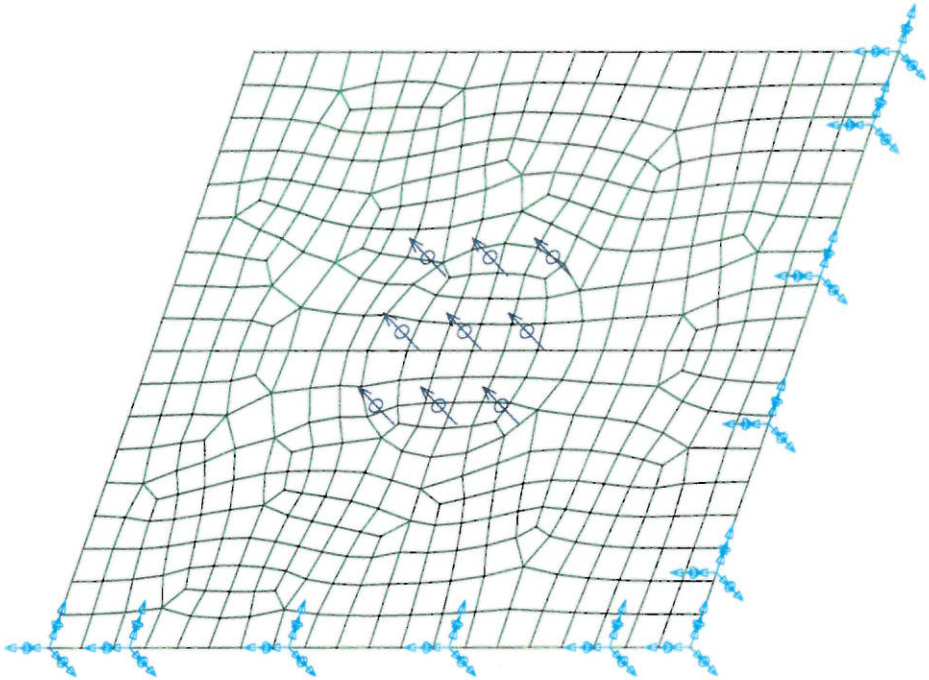

/home/dmitchel/e872/e872.mf1

RESULTS: 3- B.C. 1,LOAD 1,STRESS_3
STRESS - VON MISES MIN: 7.51E-01 MAX: 3.55E+03
DEFORMATION: 1- B.C. 1,LOAD 1,DISPLACEMENT_1
DISPLACEMENT - MAG MIN: 0.00E+00 MAX: 1.26E-03
FRAME OF REF: PART

VALUE OPTION:ACTUAL
SHELL SURFACE: TOP

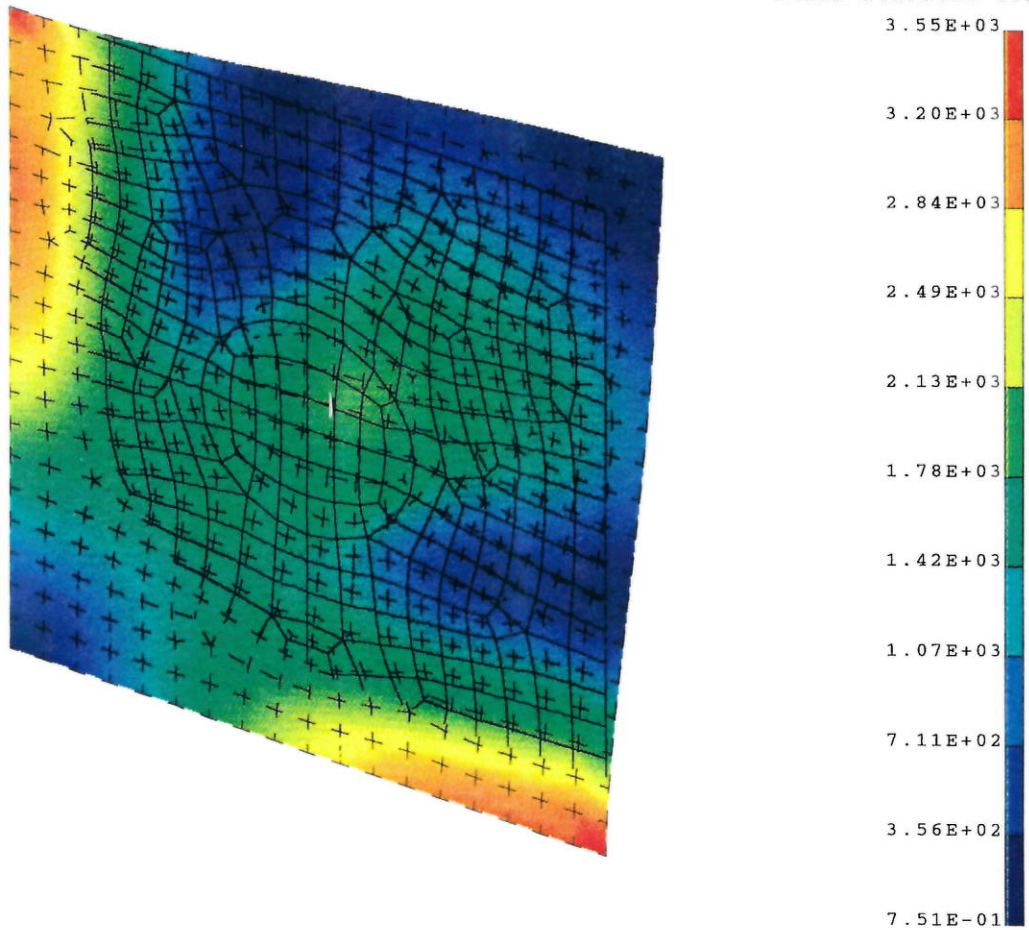

/home/dmitchel/e872/e872.mf1

RESULTS: 1- B.C. 1,LOAD 1,DISPLACEMENT_1
DISPLACEMENT - MAG MIN: 0.00E+00 MAX: 1.26E-03
DEFORMATION: 1- B.C. 1,LOAD 1,DISPLACEMENT_1
DISPLACEMENT - MAG MIN: 0.00E+00 MAX: 1.26E-03
FRAME OF REF: PART

VALUE OPTION:ACTUAL

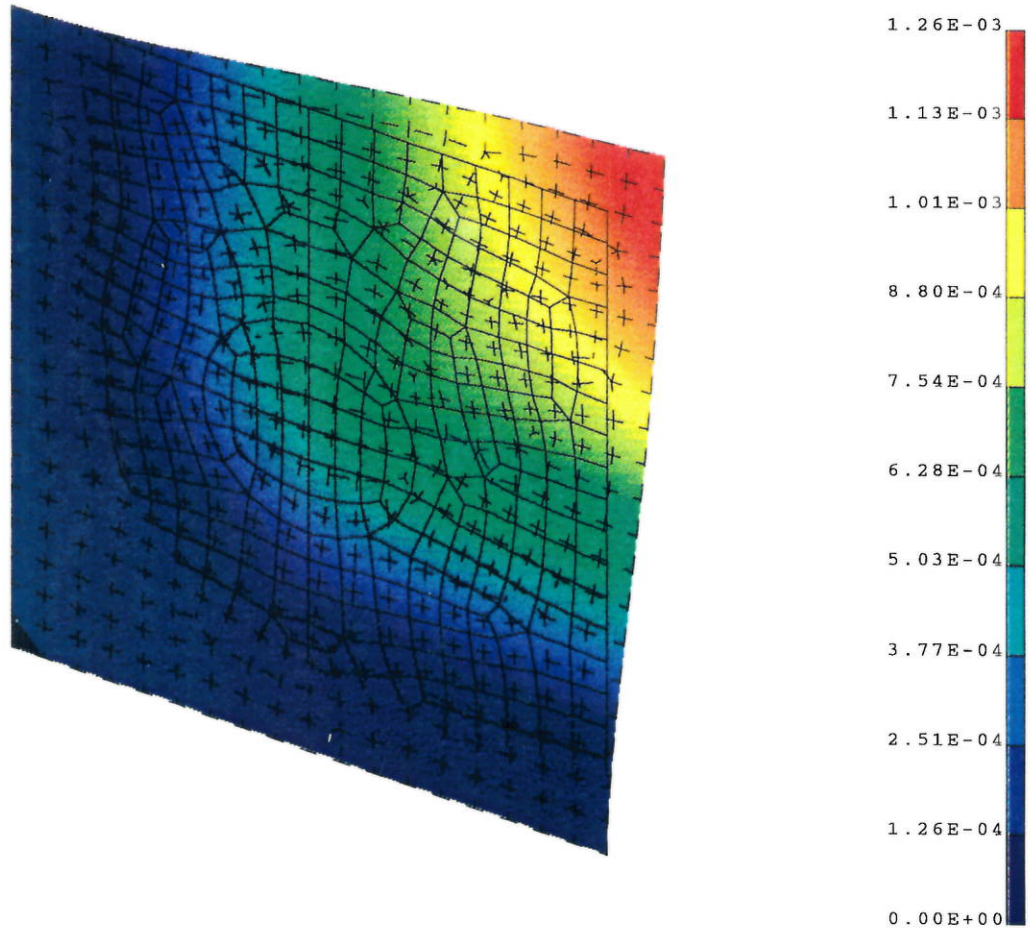

Boss Plate Weld Calculations:

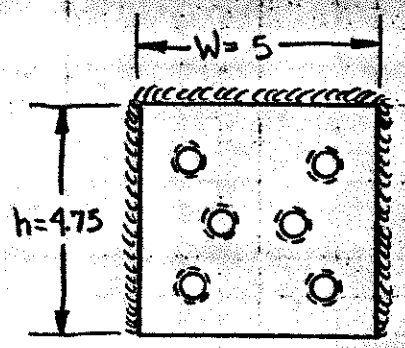

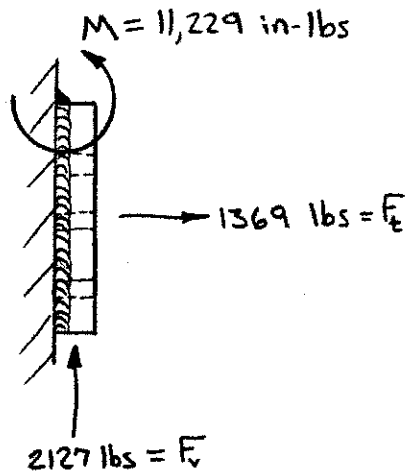

Calculate the Moment of Inertia of the line group (in^3):

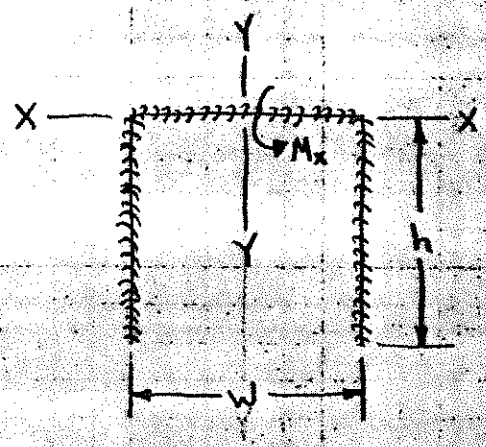

$$I_x = 2\int_0^h Y^2 dy$$

$$I_x = \frac{2}{3} y^3 \Big|_0^h = \frac{2}{3} h^3$$

$$I_x = \frac{2}{3}(4.75)^3 = 71.45 \text{ in}^3$$

$$c = 4.75 \text{ in}$$

Calculate the total length of weld:

$$L = 2(4.75) + 5 = 14.5 \text{ in}$$

Calculate the loads on the line weld per unit inch:

$$\tau_t = \frac{F_t}{L} = \frac{1369 \text{ lbs}}{14.5 \text{ in}} = 94.4 \text{ lbs/in}$$

$$\tau_v = \frac{F_v}{L} = \frac{2127 \text{ lbs}}{14.5 \text{ in}} = 146.7 \text{ lbs/in}$$

$$\sigma_b = \frac{Mc}{I} = \frac{(11,229 \text{ in-lbs})(4.75 \text{ in})}{71.45 \text{ in}^3} = 746.5 \text{ lbs/in}$$

Vector Sum of weld loads:

$$F_{weld} = \sqrt{\tau_v^2 + (\tau_t + \sigma_b)^2} = \sqrt{(146.7)^2 + (94.4 + 746.5)^2}$$

$$F_{weld} = 853.6 \text{ lbs/in}$$

Calculate the Minimum fillet Weld size:

$$t_e = .707(a_{min})$$

$$F_{weld} = t_e \cdot \tau_{all}$$

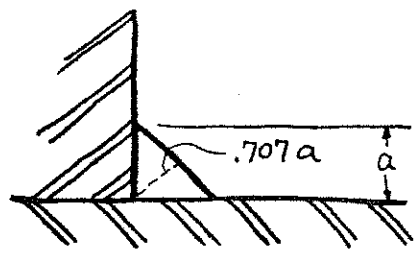

Assume: $\tau_{all} = \left(\frac{1}{2}\right)\left(\frac{1}{3}F_y\right) = 5{,}000 \text{ psi}$ (Base Material: $F_y = 30{,}000$ psi)

$$F_{weld} = .707(a_{min})(\tau_{all}) \Rightarrow a_{min} = (1.414)\frac{F_{weld}}{\tau_{all}}$$

$$a_{min} = (1.414)\frac{853.6 \text{ lbs/in}}{5000 \text{ lbs/in}^2} = .24 \text{ in}$$

Note: A 1/4" fillet weld is sufficient by calculation, but as stated on p. 5-67, ASD, 9th ed, Manual of Steel Construction, since the material thickness of either joined part is thicker than 3/4", a minimum fillet weld of 5/16" is necessary. (see table J2.4).

* Therefore, the fillet weld must be called out as a 5/16" fillet weld.

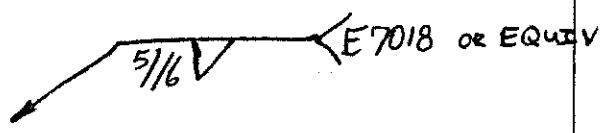

Fermilab
RD/MSD/Engineering Analysis Group
MS219, P.O.Box 500,Batavia, IL60510

ENGINEERING ANALYSIS REPORT (EAR) # 112

Aluminum Strip for the coil support of the Mu-Sweep-II Magnet

Ang Lee

March 1, 1994

Aluminum Strip for the Coil Support of the Mu-Sweep II Magnet

Ang Lee

March 1, 1994

This note contains a calculation of the coil support for the Mu-sweep-II magnet. The purpose of this calculation is to find a proper method to prevent the coil horizontal displacement due to the magnetic force. The magnet force__ Lorentz's force is calculated based on the 2-D finite analysis for the possible maximum current supply NI=76800 A-turn/pole. This number is based on the 8 layers x 8 truns x 1200 A. Two values of the horizontal force are obtained. One is for the coil located outside of the iron. It is smaller than the one located inside of the iron. The larger number appears to be 4043 N/m (23 lbf/in). This number is taken for the purpose of the design. Since the length of the coil on the straight side is about 216", the design of the coil structure without intermediate supports reveals a large and unacceptable horizontal displacement (0.5"). In order to control this large displacement to a reasonable number (assuming less than 1/16"), the span length has to be reduced. The calculation shows that the minimum span length should not exceed 126". At least, one intermediate support is needed for both sides coil. It is proposed to use three intermediate supports for each side of the coil with a support dimensions 0.25" x 4" (thickness x width). It could be either aluminum or stainless steel. If aluminum is used, the calculation shows that the maximum deflection is less than 3 mils based on the simple support beam model. Finite element model shows a even smaller deflection because of the better representation of the boundary condition. Nevertheless, three intermediate supports should be more than adequate. Further calculation also shows that the stress of coil itself is also very small (less that 300 psi) compared with the allowable stress based on the ASME code (2666 psi). The stress for the support itself shows only about 700 psi. It is far below to the allowable for the both aluminum and stainless steel material. One more command is that the 3-D magnetostatic calculation shows a 30% higher horizontal force density. Even so, the current design is considered to meet requirement and to be very safe.

All calculation details are attached in Appendix.

Appendix:

Calculation details

Coil support Calculation for Mu-Sweep-II . A. Lee 2/94

Magnetic Force From 2-D Analysis based on $NI = 76{,}800$ (A-Turn/pole) and $B_y = 1.88$ (T)

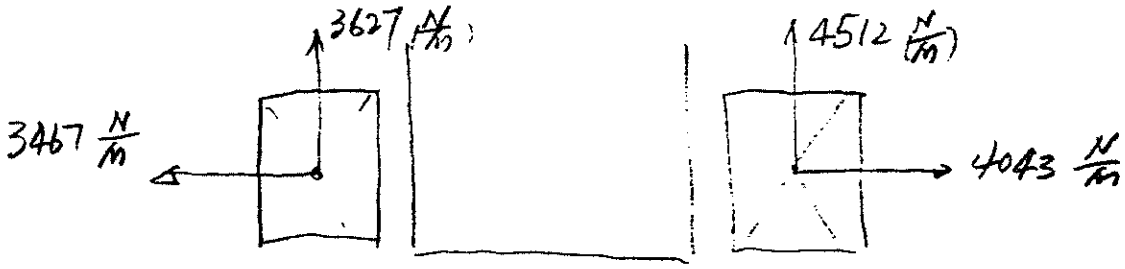

Assuming $F = 4043 \left(\frac{N}{m}\right) = 23.10$ lbf/in as a design Load, Simple support beam model

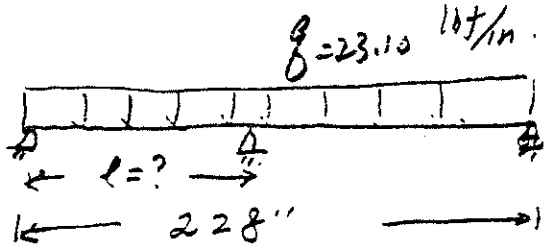

a): Beam without intermediate Support

$$y_{max} = \frac{5 \cdot q \times 228^4}{384\,(EI)_m}.$$

where: $E = 10 \times 10^6$ (Aluminum)

$$I = \frac{10.5'' \times (6.5'')^3}{12} = 240 \text{ in}^4.$$

since there are many water holes inside of coil, the actual stiff will be reduce by a factor ϕ, which is estimated as.

$$\phi = 1 - \frac{A(\text{hole})}{A(\text{conductor})} = 1 - \frac{\frac{\pi}{4} \times 0.4^2}{0.75 \times 1.25} = 0.87.$$

Assuming $\phi = 0.5$, then Modified stiffness

$$(EI)_m = \phi \cdot EI = 0.5 \times 240 \times 10 \times 10^6 = 1.2 \times 10^9$$

Then,

$$y_{max} = \frac{5 \times 23.10 \times 228^4}{384 \times 1.2 \times 10^9} = 0.67''$$

For the case of no intermediate support

#

b): Assuming the maximum deflection should be Less than 1/16", What will be the maximum span Length ? L_{max}

$$y_{max} = \frac{5 \cdot q \times L_{max}^4}{384 \cdot (EI)_m} \leq 1/16''$$

$$L_{max} \leq \left[\frac{384\ (EI)_m \times (\frac{1}{16})''}{5 \times q}\right]^{0.25}$$

$$= \left[\frac{384 \times 1.2 \times 10^9 \times 0.0625}{5 \times 23.10}\right]^{0.25} = 126''$$

* Therefore, at least <u>one intermediate</u> support is needed. Let's propose to use 3 intermediate support (4 spans across the 228''), then, the max. deflection y_{max}

$$\boxed{y_{max} = \frac{5 \times q \times (\frac{228}{4})^4}{384\,(EI)_m} = \frac{5 \times 23.10 \times (\frac{228}{4})^4}{384 \times 1.2 \times 10^9} = 2.63 \text{ (mils)}}$$

ok #.

c). Stress of coil:

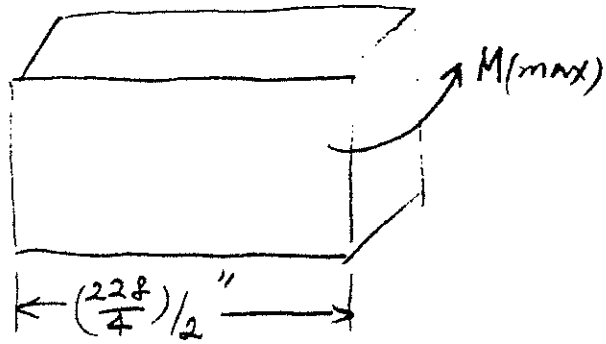

$$M(max) = 8 \times \frac{57}{2} \times \frac{57}{4} = \frac{8 \times 57^2}{8} = \frac{23{,}10 \times 57^2}{8} = 9382.$$

$$\boxed{\sigma_{(max)} = \frac{M(max) \times y_{max}}{I_n} = \frac{9382 \times \frac{0.5}{2}}{240 \times 0.5} = 254 \text{ (psi)}.}$$

Assuming the material for ma-sweep II is the same as Analysis magnet, the yield stress is given:

$$\boxed{\sigma_Y = 4{,}000 \text{ (psi)}}$$

Based on ASME Code, Allowable stress is calculated

$$\sigma_{all} = \frac{2}{3}\sigma_Y = 2{,}666 \text{ (psi)}.$$

$$\text{Ration} = \frac{\sigma_{all}}{\sigma_{max}} = 10$$

safe enough

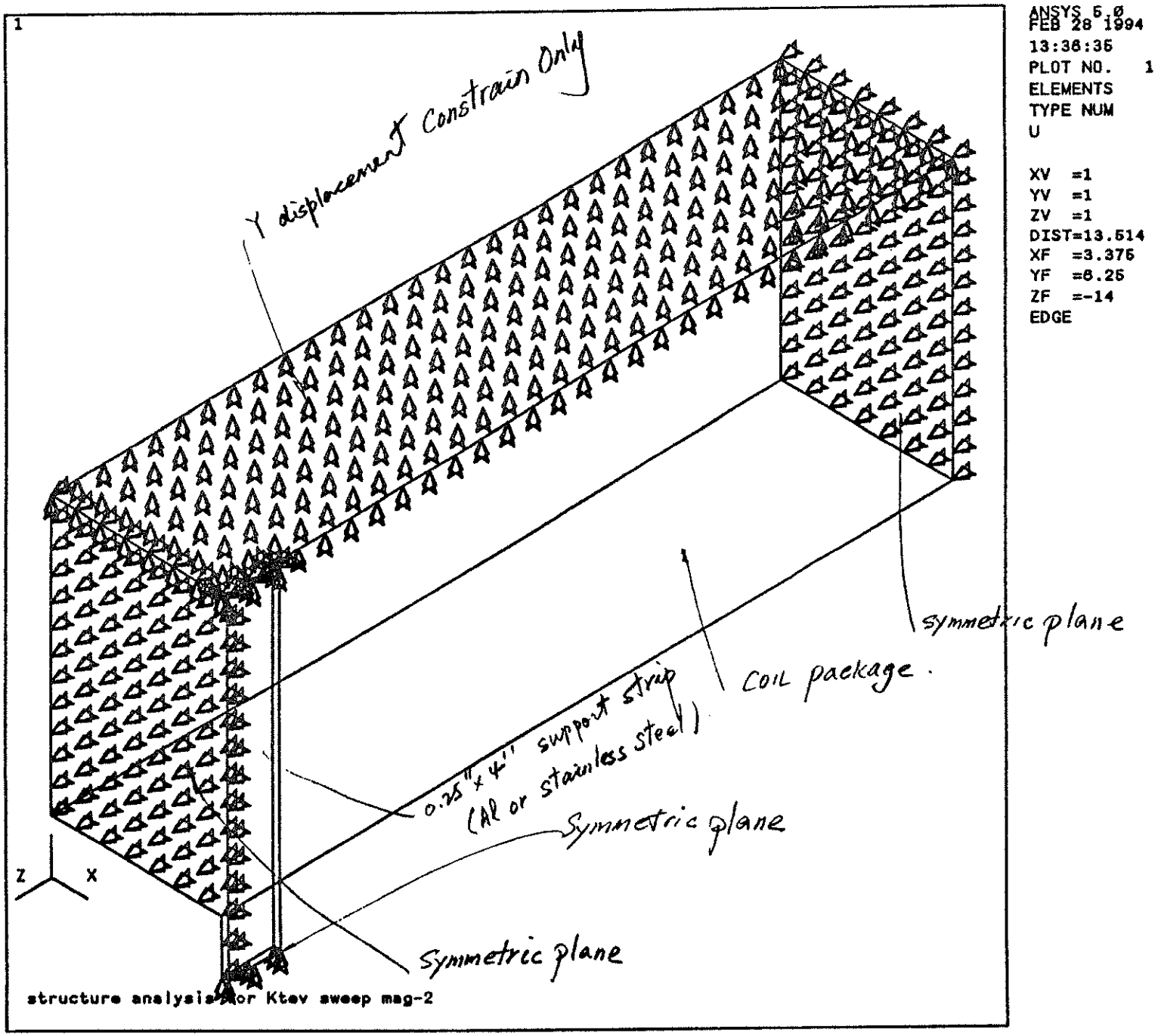

Figure 1 Finite Element model

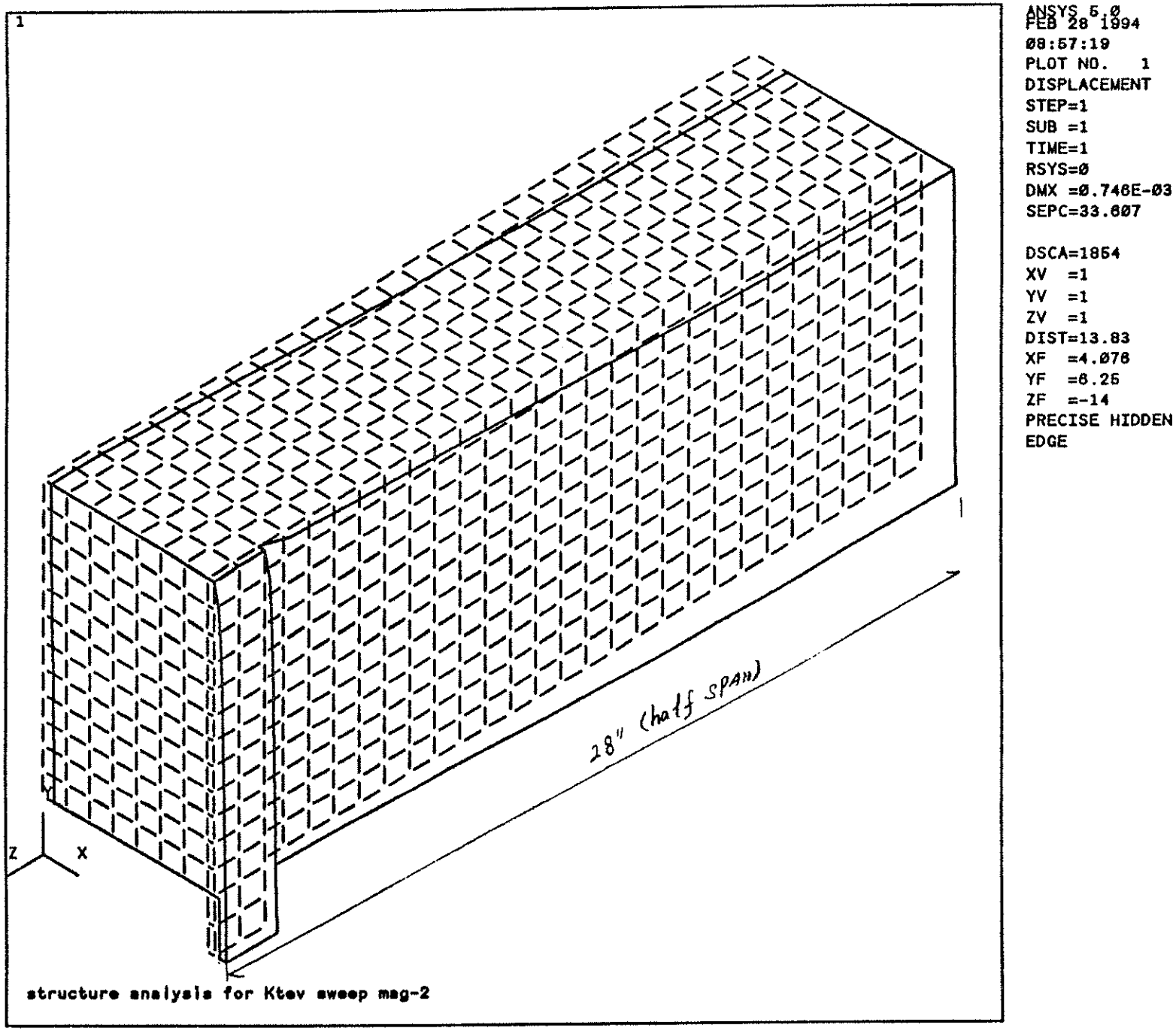

Figure 2. Finite Element Result for displacement

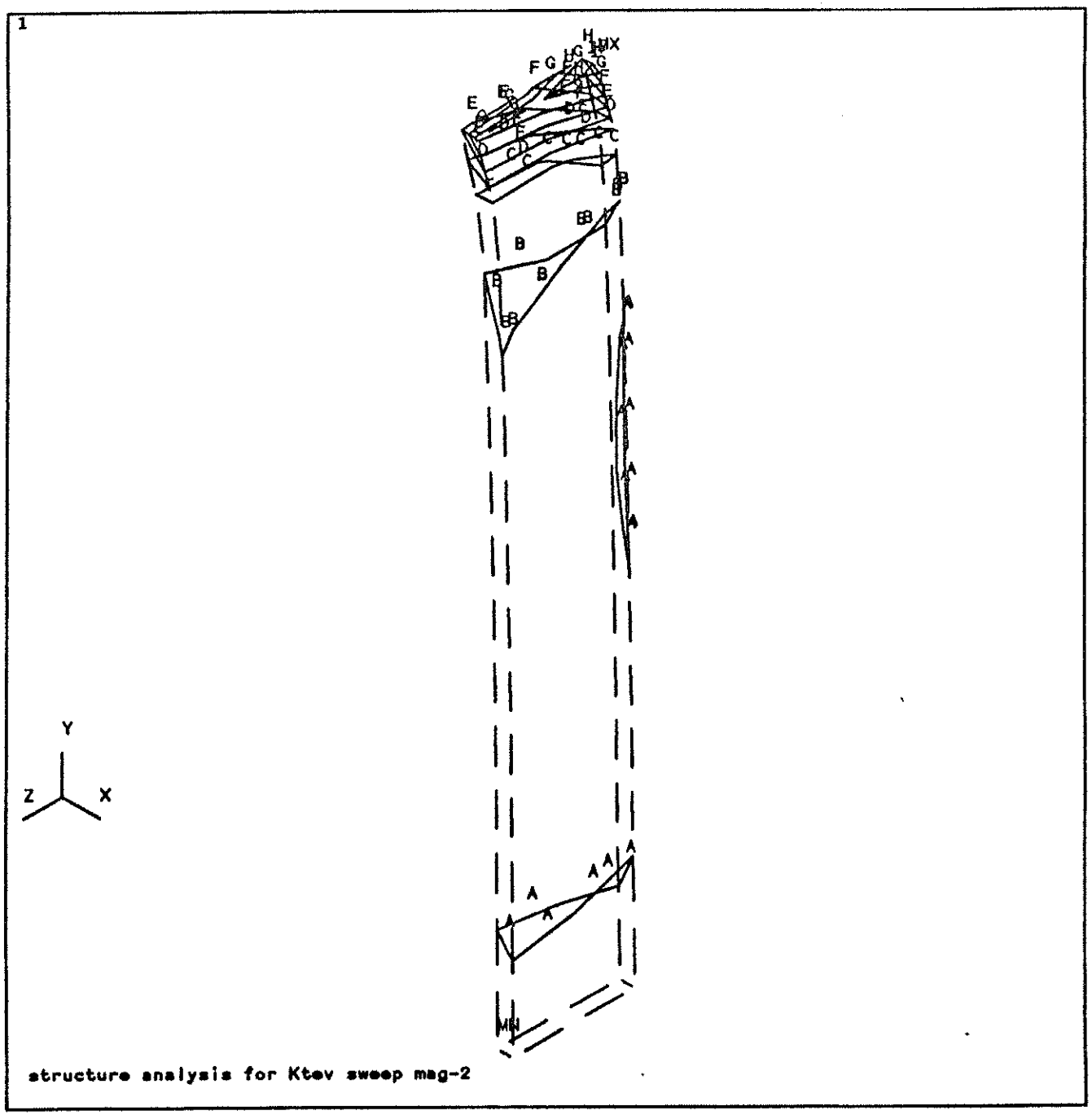

Figure 3 Finite Element Result for support

Force output from 3-D model ($\frac{N}{m}$)

c**** for NI=76800 A-turn/pole , Max field =1.88 Tesla

```
PARAMETER FX1      =    -4004.704
PARAMETER FY1      =     3692.807
PARAMETER FZ1      =    0.1648992E-10
PARAMETER FX2      =     4605.102
PARAMETER FY2      =     4637.271
PARAMETER FZ2      =    0.2126460E-10
PARAMETER DIS      =     11.34230
c******

c******

PARAMETER FX1      =    -4013.125
PARAMETER FY1      =     3691.328
PARAMETER FZ1      =   -0.6306452E-11
PARAMETER FX2      =     4622.677
PARAMETER FY2      =     4636.462
PARAMETER FZ2      =   -0.3372451E-11
PARAMETER DIS      =     31.97941
c******

c******

PARAMETER FX1      =    -4026.022
PARAMETER FY1      =     3685.182
PARAMETER FZ1      =    0.1386258E-11
PARAMETER FX2      =     4652.011
PARAMETER FY2      =     4631.810
PARAMETER FZ2      =   -0.5714237E-11
PARAMETER DIS      =     48.89111
c******

c******
```

```
PARAMETER FX1      =    -4037.576
PARAMETER FY1      =     3666.401
PARAMETER FZ1      =   -0.7861249E-11
PARAMETER FX2      =     4691.033
PARAMETER FY2      =     4618.576
PARAMETER FZ2      =   -0.3028354E-11
PARAMETER DIS      =     62.74993
C******

C******

PARAMETER FX1      =    -4043.449
PARAMETER FY1      =     3623.606
PARAMETER FZ1      =    0.1937653E-11
PARAMETER FX2      =     4740.319
PARAMETER FY2      =     4591.300
PARAMETER FZ2      =    0.3984232E-11
PARAMETER DIS      =     74.10697
C******

C******

PARAMETER FX1      =    -4042.295
PARAMETER FY1      =     3542.382
PARAMETER FZ1      =    0.3286250E-13
PARAMETER FX2      =     4801.556
PARAMETER FY2      =     4545.639
PARAMETER FZ2      =    0.9882813E-12
PARAMETER DIS      =     83.41384
C******

C******

PARAMETER FX1      =    -4037.577
```

```
PARAMETER FY1      =     3407.546
PARAMETER FZ1      =   -0.6013848E-11
PARAMETER FX2      =     4874.782
PARAMETER FY2      =     4478.447
PARAMETER FZ2      =    0.1202796E-10
PARAMETER DIS      =     91.04064
c******

c******

PARAMETER FX1      =    -4046.006
PARAMETER FY1      =     3205.158
PARAMETER FZ1      =    0.1200128E-11
PARAMETER FX2      =     4956.483
PARAMETER FY2      =     4383.766
PARAMETER FZ2      =    0.3922869E-11
PARAMETER DIS      =     97.29066
c******

c******

PARAMETER FX1      =    -4088.804
PARAMETER FY1      =     2940.731
PARAMETER FZ1      =   -0.4714795E-11
PARAMETER FX2      =     5027.212
PARAMETER FY2      =     4254.414
PARAMETER FZ2      =    0.1245710E-10
PARAMETER DIS      =     102.4124
c******

c******

PARAMETER FX1      =    -5124.535
PARAMETER FY1      =     2648.894
```

```
PARAMETER FZ1      =   -0.5709456E-11

PARAMETER FX2      =     5062.299

PARAMETER FY2      =     3993.861

PARAMETER FZ2      =   -0.7519662E-11

PARAMETER DIS      =     106.6096

C******

C******
```

FERMILAB ENGINEERING NOTE

SECTION	PROJECT	SERIAL-CATEGORY	PAGE
	KTEV		3

SUBJECT: MU SWEEP II HEADER

NAME: F. RENKEN

DATE: 8/5/94

REVISION DATE:

– THREAD ADAPTER CALCULATION
CONFORMS TO B31.3 CODE
APPLICABLE SECTIONS 304.3.3 FOR REINFORCED AREA.

A_1 = REQ'D REINFORCEMENT AREA
$= t_h d_1 (2 - \sin\beta)$
d_1 = EFFECTIVE LENGTH REMOVED
$= 0.921$
t_h = TUBE THICKNESS DESIGNED
$= 0.064$
β = ANGLE = 90°

$A_1 = (.921)(.064)(2 - \sin 90°)$
$A_1 = 0.059 \text{ IN}^2$

$A_2 + A_3 + A_4 \geq A_1$ TO MEET CODE
$A_4 = 0$ NO ADDITIONAL REINFORCEMENT
A_2 = EXCESS WALL THICKNESS - PIPE
$= (2d_2 - d_1)(T_h - t_h - c)$
d_2 = DIAMETER OF ADAPTER / 2
$= 0.75$ IN
T_h = ACTUAL TUBE THICKNESS = 0.083
c = CORROSION / MELT PROPERTIES = 0

$A_2 = (2(0.75) - 0.921)(0.083 - 0.064 - 0)$
$A_2 = \underline{0.011} \text{ IN}^2$

$A_3 = 2 L_4 (T_b - t_b - c) / \sin\beta$
T_b = THICKNESS ADAPTER = 0.289
L_4 = BRANCH LENGTH = 0.969
t_b = DESIGN THICKNESS = $\frac{1.5}{2.1125}(0.064) = 0.045$
c = THREAD DEPTH = 0.065

$A_3 = 2(.969)[0.289 - 0.045 - 0.065] / 1$
$A_3 = 0.347 \text{ IN}^2$

$A_2 + A_3 + A_4 = 0.358 > 0.059$ SO OK.

5874d1

FERMILAB ENGINEERING NOTE	SECTION	PROJECT KTeV	SERIAL-CATEGORY	PAGE 2

SUBJECT: MU SWEEP II HEADER

NAME: F. RENKEN

DATE: 8/5/94

REVISION DATE:

— HEADER (SUPPLY AND RETURN) PRESSURE CALCULATIONS

- WATER SUPPLY - LCW SYSTEM
  PRESSURE - 250 PSIG MAXIMUM
  TEMPERATURE = 166 °F

- CONSTRUCTION
  - 2" NOMINAL TYPE K COPPER TUBING
    RATED FOR 400 PSI @ 200 °F

CALCULATION TO SHOW MANIFOLD CONFORMS TO ASME B31.3 PART 2 - PRESSURE DESIGN OF PIPING

SECTION 304.1 MINIMUM WALL THICKNESS

$$t = \frac{PD}{2(SE + PY)} \qquad \text{EQN 3a}$$

WHERE
P = PRESSURE = 250 PSI
D = OD = 2.125 IN
E = QUALITY TABLE A-1A = 0.8
* S = ALLOWABLE STRESS [TABLE]
= 5100 PSI @ 150°F
Y = COEFFICIENT [TABLE 304.1.1]
= 0.4

$$t = \frac{(250)(2.125)}{2(5100(0.8)+250(.4))}$$

$$t = 0.064 \text{ IN}$$

ACTUAL $t = 0.083 > 0.064$ SO DESIGN MEETS SPECIFICATION

NOTE: TUBE HAS MANY BRANCHES (10)
CALCULATIONS ARE ON NEXT PAGE

* Allowable stress from ASME Boiler & Pressure Vessel Code, Section II D p. 202 1995 edition. UNS No. C12200, Spec. No. SB-42, temper 061 (conservative)

KTeV MuSweep II Magnet - Water/Glycol Cooling A. Stefanik/F. Renken 7-29-94

GENERAL INPUT DATA:							
Coolant supply static pressure - coolant return static pressure =				200	psi		
Coolant supply temperature =				110	F		
Conductor cooling passage inside diameter =				0.4	inches		
Conductor cooling passage absolute roughness =				0.000005	feet - Roughness is for commercial steel.		
Hose absolute roughness =				0.00015	feet - Roughness is for commercial steel.		
Hose barb absolute roughness =				0.00015	feet - Roughness is for commercial steel.		
Conductor cross sectional area =				0.812	square inches		
Operating current =				1200	amps		
Volume percent of water in coolant =				40	vol %		
Volume percent of glycol in coolant =				60	vol %		
CALCULATED DATA:							
Conductor cooling passage relative roughness =				0.00015			
Friction factor in zone of complete turbulence for conductor cooling passage=				0.013174831			
Conductor cooling passage flow area =				0.125663706	sq inches =	0.000872665	square feet
Mass percent of water in coolant =				40	mass % (Approximately equal to vol %.)		
Mass percent of glycol in coolant =				60	mass % (Approximately equal to vol %.)		
RESULTS FOR ONE 8 LAYER COIL:		*NOTE: Input data are in italics.*					
Parameter	Units	Layers 1 & 2	Layers 3 & 4	Layers 5 & 6	Layers 7 & 8		Totals
Conductor length	*[feet]*	*672.6*	*672.6*	*672.6*	*672.6*		
K for conductor bends	*[-]*	*66.98*	*64.61*	*64.61*	*64.61*		
Total length of hoses	*[feet]*	*6*	*6*	*6*	*6*		
Hose inside diameter	*[inches]*	*0.75*	*0.75*	*0.75*	*0.75*		
K for hose barbs	*[-]*	*3.54*	*2.29*	*2.29*	*2.29*		
Total length of hose barbs	*[inches]*	*15.78*	*10.52*	*10.52*	*10.52*		
Hose barb inside diameter	*[inches]*	*0.625*	*0.625*	*0.625*	*0.625*		
Pressure drop results:							
Coolant mass flow rate	[Lbm/hour]	1322.10	1324.87	1324.87	1324.87		5296.71
Coolant volume flow rate at supply temp	[gpm]	2.49	2.50	2.50	2.50		9.98
Coolant return temp	[F]	166.70	166.58	166.58	166.58		
Coolant average temperature	[F]	138.35	138.29	138.29	138.29		
Coolant density at ave temp	[Lbm/ft^3]	65.49	65.49	65.49	65.49		
Coolant abs viscosity at ave temp	[centipoise]	1.93	1.93	1.93	1.93		
Coolant specific heat at ave temp	[Btu/lbm-F]	0.791843955	0.791801759	0.791801759	0.791801759		
Coolant Reynold's No. in conductor at ave temp	[-]	10827.41	10840.53	10840.53	10840.53		
Darcy friction factor for conductor passage	[-]	0.030580148	0.030570318	0.030570318	0.030570318		
Coolant inlet velocity	[feet/sec]	6.36	6.37	6.37	6.37		
Coolant velocity at ave temp	[feet/sec]	6.43	6.44	6.44	6.44		
Coolant exit velocity	[feet/sec]	6.50	6.51	6.51	6.51		
Average coolant velocity in hoses	[feet/sec]	1.83	1.83	1.83	1.83		
Coolant Reynold's No. in hoses at ave temp	[-]	5774.62	5781.62	5781.62	5781.62		
Darcy friction factor for hoses	[-]	0.039332159	0.039320568	0.039320568	0.039320568		
Average coolant velocity in hose barbs	[feet/sec]	2.63	2.64	2.64	2.64		
Coolant Re No. in hose barbs at ave temp	[-]	6929.54	6937.94	6937.94	6937.94		
Darcy friction factor for hose barbs	[-]	0.038287131	0.038276911	0.038276911	0.038276911		
Static pressure drop due to conductor length	[psi]	180.14	180.83	180.83	180.83		
Static pressure drop due conductor bends	[psi]	19.55	18.94	18.94	18.94		
Static pressure drop due to hose	[psi]	0.09	0.09	0.09	0.09		
Static pressure drop due to hose barbs	[psi]	0.22	0.14	0.14	0.14		
Static pressure change due to velocity change	[psi]	0.012692594	0.012717499	0.012717499	0.012717499		
Total static pressure drop	[psi]	200.01	200.01	200.01	200.01		
Average conductor temperature	[F]	140.27	140.21	140.21	140.21		
Conductor electrical resistivity	[ohm-in^2/ft]	1.45813E-05	1.45799E-05	1.45799E-05	1.45799E-05		
Conductor electrical resistance	[ohms]	0.012078036	0.012076892	0.012076892	0.012076892		
Layer heat load	[watts]	17392.37	17390.72	17390.72	17390.72		69564.54
Layer heat load	[Btu/hour]	59359.62855	59354.00812	59354.00812	59354.00812		237421.7
Check coolant return temp from the macro	[F]	166.70	166.58	166.58	166.58		
Heat transfer results:							
Average coolant heat transfer coefficient	[Btu/hr-ft^2-F]	439.01	439.55	439.55	439.55		
Difference between bulk coolant and conductor temperatures	[F]	1.919671568	1.9170987	1.9170987	1.9170987		
Coolant average film temperature	[F]	139.31	139.25	139.25	139.25		
Coolant abs viscosity at ave film temp	[centipoise]	1.90	1.90	1.90	1.90		
Coolant specific heat at ave film temp	[Btu/Lbm-F]	0.79251584	0.792472743	0.792472743	0.792472743		
Coolant thermal cond at film temp	[Btu/hr-ft-F]	0.22	0.22	0.22	0.22		
Coolant Prandtl No. at ave film temp	[-]	16.66	16.67	16.67	16.67		
Coolant Reynold's No. at ave film temp	[-]	10980.61	10993.58	10993.58	10993.58		
Conductor heat transfer surface area	[ft^2]	70.43	70.43	70.43	70.43		
Coolant mass velocity per unit flow area	[Lbm/hr-ft^2]	1515020.681	1518186.507	1518186.507	1518186.507		
Average heat transfer coefficient	[Btu/hr-ft^2-F]	439.0051802	439.5527851	439.5527851	439.5527851		
Check difference between bulk coolant and conductor temps from the macro calc	[F]	1.919711864	1.917138703	1.917138703	1.917138703		

KTeV MuSweep II Magnet - Water/Glycol Cooling A. Stefanik/F. Renken 7-29-94

RESULTS FOR TWO COILS							
Coolant mass flow rate	[Lbm/hour]	10593.42					
Coolant volume flow rate at supply temp	[gpm]	19.95					
Heat load	[watts]	139129.09					
Heat load	[Btu/hour]	474843.31					
Combined return temperature	[F]	166.60					
Coolant temperature increase	[F]	56.60					
Input value for coolant pressure drop	[psi]	200					

Header-MuSweep

Pressure Drop in MuSweep II Magnet Header								
F. Renken								
5-25-94								
Properties and constants:								
	[units]	value						
Viscosity:	lbm/s/ft	0.00134						
Density:	lbm/ft^3	65.5						
Accl. Grav.	lbf/s^2	32.2						
G Constant	lbm ft/lbf s^2	32.2						
Line Press.:	psig	250						
Tube and Pipe Characteristics:								
Flow Rate:	ft^3/sec	0.047						
Diameter:	in	2.125	Type K copper tubing					
Thickness:	in	0.083						
ID:	ft	0.16325						
Roughness E	ft	0.000005						
E/d	–	3.06E-05						
Position	Length:	Flow	Velocity	Reynold's	Friction	K	Delta Press	Pressure
[#]	[ft]	[ft^3/s]	[ft/s]	[–]	[Moody Chart]	[–]	[psid]	[psig]
0	0.25	0.047	2.25	17919	0.0265	0.11	-0.108	250.11
1	0.167	0.047	2.25	17919	0.0265	0.90	-0.043	250.15
2	0.167	0.0423	2.02	16127	0.0265	0.90	-0.050	250.20
3	0.167	0.0376	1.80	14335	0.027	0.90	-0.055	250.26
4	0.167	0.0329	1.57	12543	0.0275	0.90	-0.060	250.32
5	0.167	0.0282	1.35	10751	0.028	0.90	-0.064	250.38
6	0.167	0.0235	1.12	8959	0.029	0.90	-0.068	250.45
7	0.167	0.0188	0.90	7167	0.03	0.90	-0.071	250.52
8	0.167	0.0141	0.67	5376	0.03	0.90	-0.073	250.59
9	0.167	0.0094	0.45	3584	0.03	0.90	-0.075	250.67
10	0.167	0.0047	0.22	1792	0.03	0.90	-0.076	250.74
Minimum Pressure in header:		250.11	[psig]					
Resulting Pressure Drop:		-0.11	[psi]					

7

L.C.W. Female Thread Adapter

$8.00

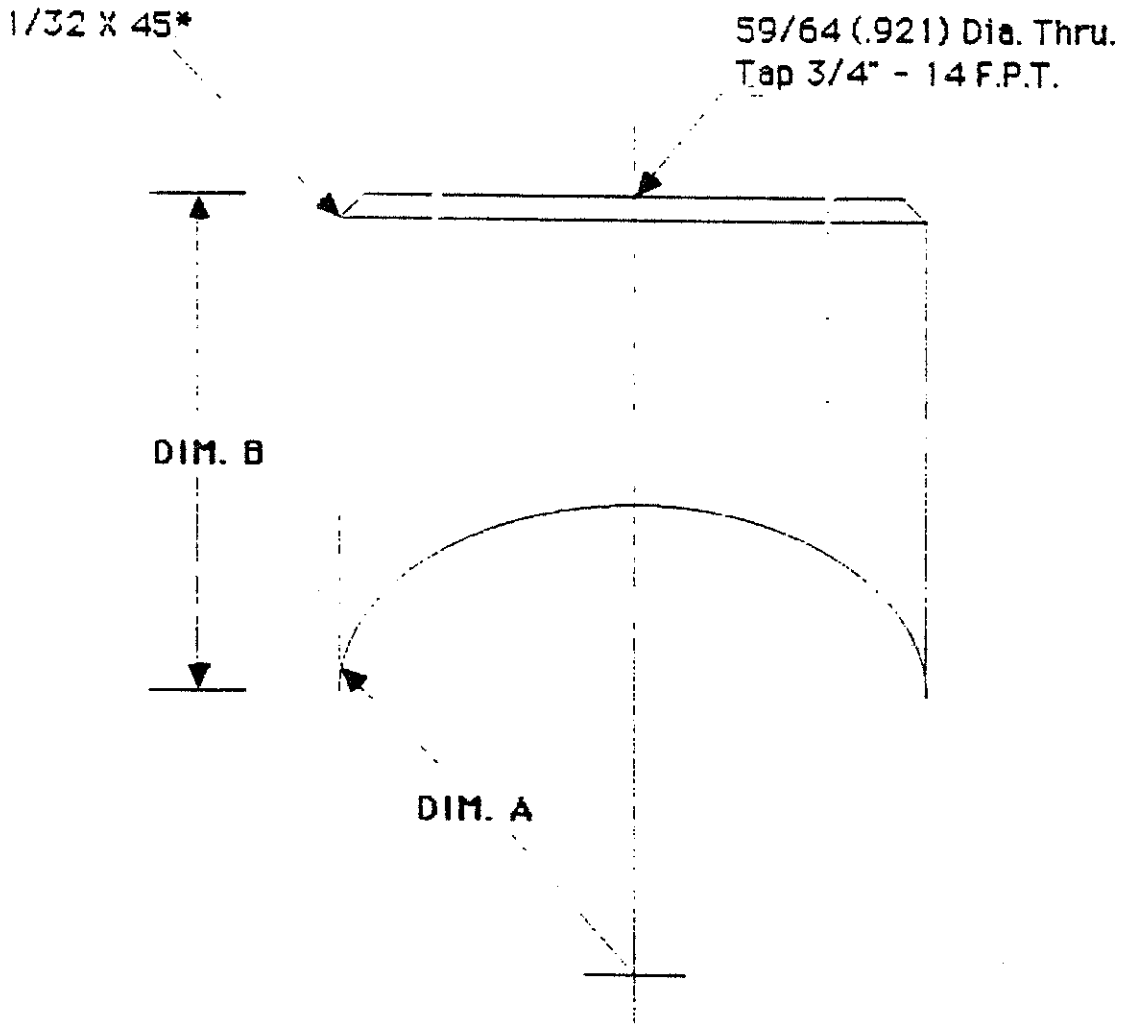

Mark Number	Dim. A.	**Dim. B**	Comments
MB-95953	1 1/16 R.	**1 1/4**	For 2" Type K-Copper Tube
MB-95953	1 9/16 R.	**1 1/8**	For 3" Type K-Copper Tube
MB-95953	2 1/16 R.	**1 1/8**	For 4" Type K-Copper Tube

Material: 1 1/2" O.D. X 3/4" I.D. Bronze

Scale: 2"=1"

Drawing: Waterworks 2831-MB-95953

R. Doyle

the components of the branch connection. Sample problems illustrating the calculations for branch reinforcement are shown in Appendix H.

(a) Nomenclature. The nomenclature below is used in the pressure design of branch connections. It is illustrated in Fig. 304.3.3, which does not indicate details for construction or welding. Some of the terms defined in Appendix J are subject to further definitions or variations, as follows:

b = subscript referring to branch

d_1 = effective length removed from pipe at branch

d_2 = "half width" of reinforcement zone

= d_1 or $(T_b - c) + (T_h - c) + d_1/2$, whichever is greater, but in any case not more than D_h

h = subscript referring to run or header

L_4 = height of reinforcement zone outside of run pipe

= $2.5(T_h - c)$ or $2.5(T_b - c) + T_r$, whichever is less

T_r = minimum thickness of reinforcing ring or saddle made from pipe. (Use nominal thickness if made from plate.)

= 0, if there is no reinforcing ring or saddle

t = pressure design thickness of pipe, according to the appropriate wall thickness equation or procedure in para. 304.1. For welded pipe, when the branch does not intersect the longitudinal weld of the run, the basic allowable stress S for the pipe may be used in determining t_h for the purpose of reinforcement calculation only. When the branch does intersect the longitudinal weld of the run, the product SE (of the stress value S and the appropriate weld joint quality factor E_j from Table A-1B) for the run pipe shall be used in the calculation. The product SE of the branch shall be used in calculating t_b.

β = smaller angle between axes of branch and run

(b) Required Reinforcement Area. The reinforcement area A_1 required for a branch connection under internal pressure is

$$A_1 = t_h\, d_1 (2 - \sin\beta) \qquad (6)$$

For a branch connection under external pressure, area A_1 is one-half the area required for internal pressure.

(c) Available Area. The area available for reinforcement is defined as

$$A_2 + A_3 + A_4 \geq A_1 \qquad (6a)$$

These areas are all within the reinforcement zone and are further defined below.

(1) Area A_2 is the area resulting from excess thickness in the run pipe wall:

$$A_2 = (2d_2 - d_1)(T_h - t_h - c) \qquad (7)$$

(2) Area A_3 is the area resulting from excess thickness in the branch pipe wall:

$$A_3 = 2L_4\,(T_b - t_b - c)/\sin\beta \qquad (8)$$

(3) Area A_4 is the area of other metal provided by welds and properly attached reinforcement. [See (f) below.] Weld areas shall be based on the minimum dimensions specified in para. 328.5.4, except that larger dimensions may be used if the welder has been specifically instructed to make the welds to those dimensions.

(d) Reinforcement Zone. The reinforcement zone is a parallelogram whose length extends a distance of d_2 on each side of the center line of the branch pipe and whose width starts at the inside surface of the run pipe (in its corroded condition) and extends beyond the outside surface of the run pipe a perpendicular distance L_4.

(e) Multiple Branches. When two or more branch connections are so closely spaced that their reinforcement zones overlap, the distance between centers of openings should be at least 1½ times their average diameter, and the area of reinforcement between the two openings shall be not less than 50% of the total that both require. Each opening shall have adequate reinforcement in accordance with (b) and (c) above. No part of the metal cross section may apply to more than one opening or be evaluated more than once in any combined area. (Consult PFI Standard ES-7 for detailed recommendations on spacing of welded nozzles.)

(f) Added Reinforcement

(1) Reinforcement added in the form of a ring or saddle as part of area A_4 shall be of reasonably constant width.

(2) Material used for reinforcement may differ from that of the run pipe provided it is compatible with run and branch pipes with respect to weldability, heat treatment requirements, galvanic corrosion, thermal expansion, etc.

(3) If the allowable stress for the reinforcing material is less than that for the run pipe, its effective area must be reduced in the ratio of allowable stress values in determining its contribution to area A_4.

(4) No additional credit may be taken for material having higher allowable stress value than the pipe.

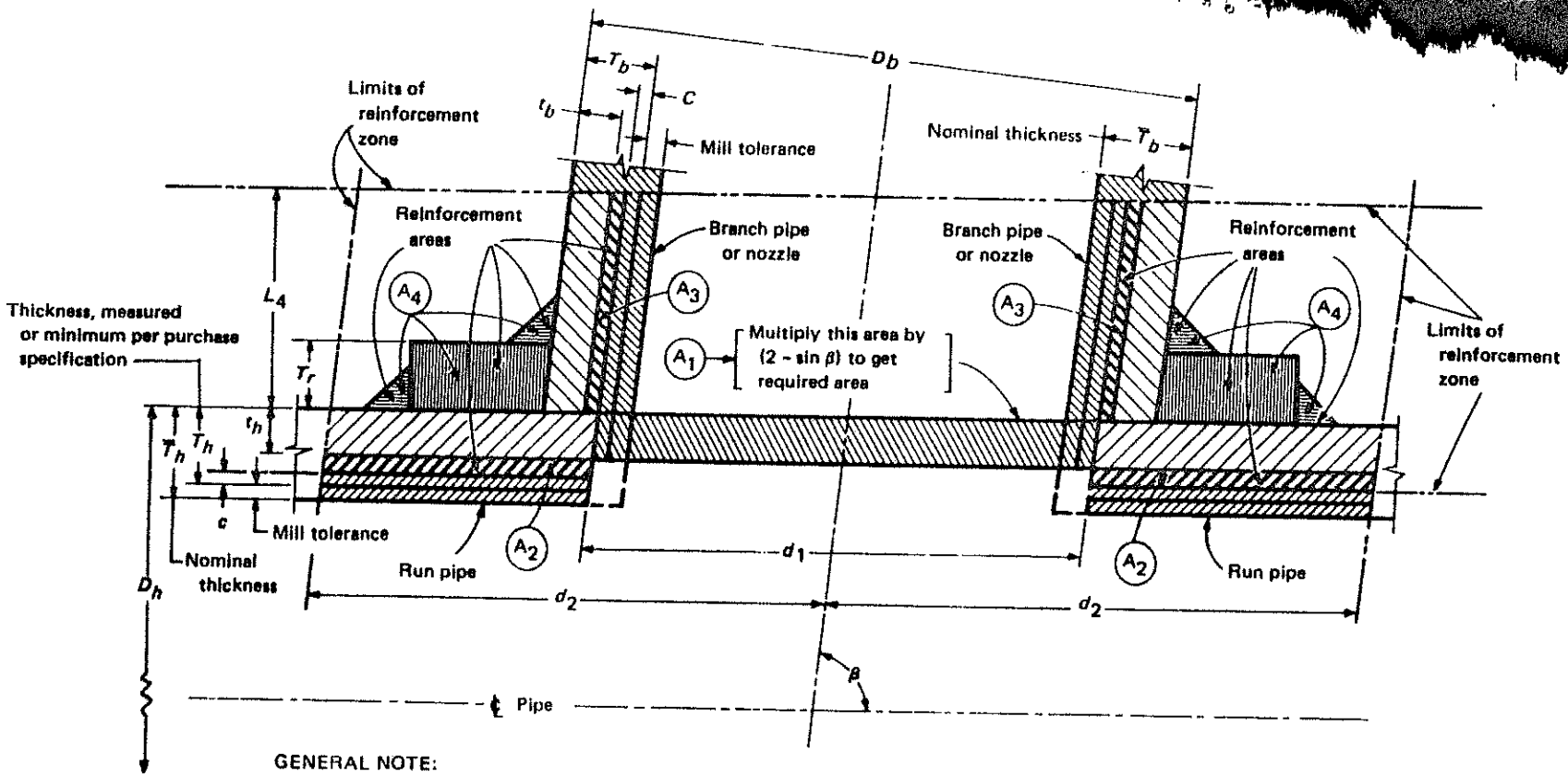

GENERAL NOTE:
This Figure illustrates the nomenclature of para. 304.3.3. It does not indicate complete welding details or a preferred method of construction. For typical weld details, see Fig. 328.5.4D.

FIG. 304.3.3 BRANCH CONNECTION NOMENCLATURE

9

Assembly instructions:

- Grout aluminum pads onto floor (1/4" – 1/2" grout; MAX)

  Pads should be level and parallel to beam line. Surveyors should be used to position these pads. Adjustment screws should be provided on each pad for alignment.

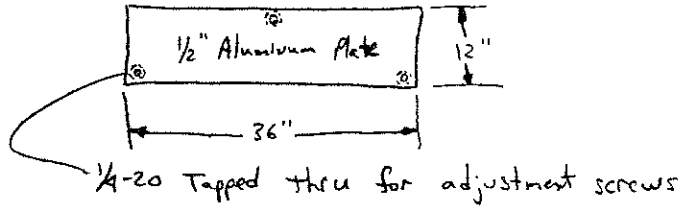

- Have surveyors measure the distance from the top of the grouted pad to the beam line height. Take inventory of all of the steel below the first coil and calculate that total steel thickness. That should be a thickness of about 53.55" The beamline, ideally, should be 16" above this height. Use the following formula to calculate the required shim thickness:

$$\text{Shim} = \text{beam line height} - 16'' - \underbrace{\text{steel thickness below coil}}_{\sim 53.55''} - \underbrace{\text{pad height}}_{\sim 1''}$$

* This shim thickness should be positive or you have problems.

- Lay in all of the lower steel. Insure a tight fit. Any large gaps perpendicular to the magnetic flux should be filled with steel. Tack weld all steel blocks with E7018 welds. I suggest a 3/8" fillet or Butt weld, 3" Length every 36". If the 2 lowest blocks are not low carbon steel, i.e. gray cast iron or cast steel, it may be necessary to use stainless steel welds or NIROD 55.

- Weld on the steel Boss plates as per assembly dwg. The weld type and size is called out in the engineering Note.

- Tap the 3/4-10 UNC holes for the inner restraint brackets.

- Mount the lower, outer restraint brackets w/ 1/2-13 UNC S.S. bolts
- Clean the steel of all loose objects. De-burr the steel that will be in proximity to the coils.
- Lay in the 1/4" rubber. (Glue it to the restraint brackets)
- Place the first coil onto the steel/rubber. Shimming between the coil and the pole steel is not required. (the coils want to move away from the pole steel).
- Place another layer of rubber on top of the 1st coil.
- Place the ARBORON Shim material on top of the 1st coil.
- Place another layer of rubber ontop of the ARBORON
- Position the next coil.
- Place one last layer of rubber on top of the 2nd coil. (The top of the rubber should be ~1/32" above the steel elevation. When the top steel is placed, the rubber will compress and snuggly hold the coil.)
- Position all of the inner restraint brackets and bolt with 3/4-10 UNC Bolts. (Stainless steel OR Grade 2 OR better)

  The brackets must have a 1/4" rubber pad glued onto the face that comes into contact with the coils. Push the bracket snuggly against the coil. Shim between the rubber and bracket as needed to maintain good contact against the coils.
- Position all of the upper steel and tack weld in the same manner as was done with the lower steel. Take care to protect the coils from weld splash and sparks.
- Position and weld on the upper, steel boss plates.

- mount the upper, outer restraint brackets and insure that they are snug against the coil. These brackets must have a rubber pad glued to the face that comes into contact with the coils.

- Glue on 1/4" rubber pads to each restraint strap. Bolt on these straps and insure good, snug contact against the coils.

- Weld on the water manifold mounting hardware.

- install the water manifolds and 1/2" Brass hose barbs.

- weld on the aluminum "bus connects" and "lug flags".

- MAB to connect rubber hoses between the manifolds and conductor

- PAB to connect manifolds to RAW water system. Also will add piping instrumentation

- RD/electrical to connect Klixons, instrumentation, and power supplys.

- Hand guards around conductor leads may be required. Check with safety to see if this is a requirement. If it is, have MAB techs fashion a frame covered with LEXAN. Don't waste time developing your own guards and doing the drafting. You'll get a good looking and functional guard much quicker if you just go directly to MAB.

- Run a power test and you're ready for operation. of course Safety approval is a must.
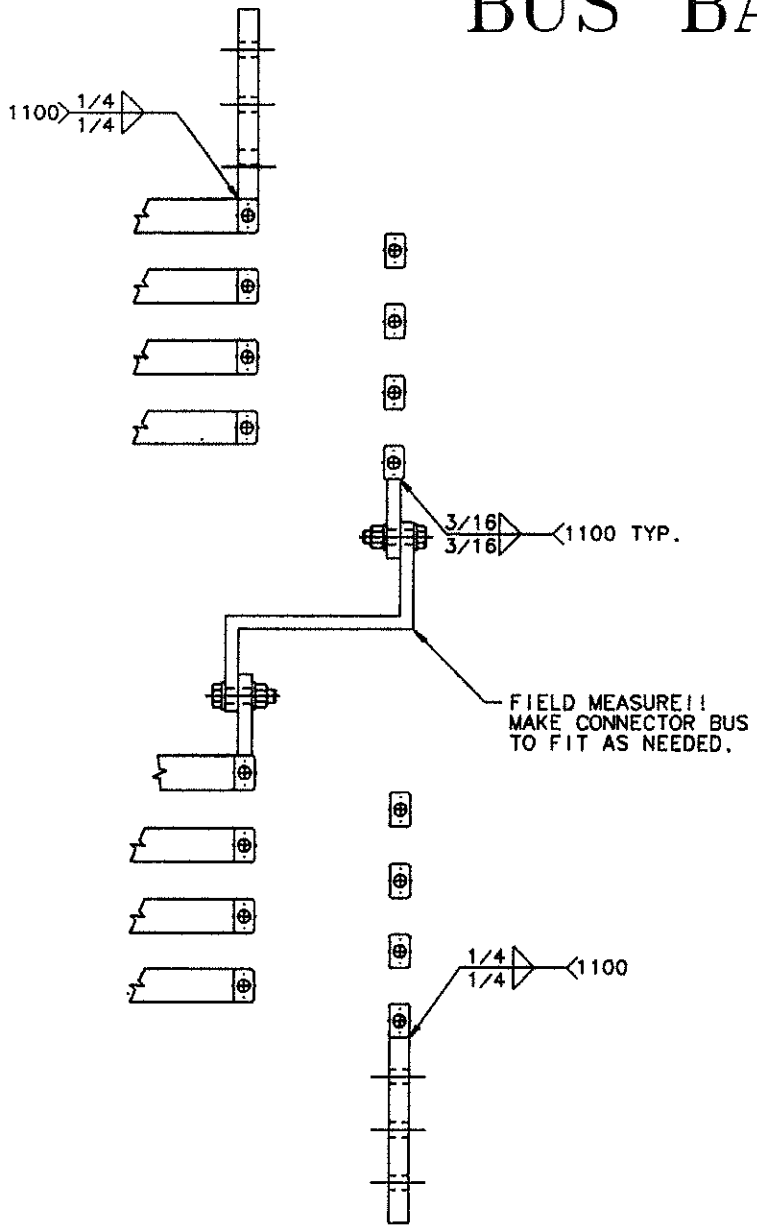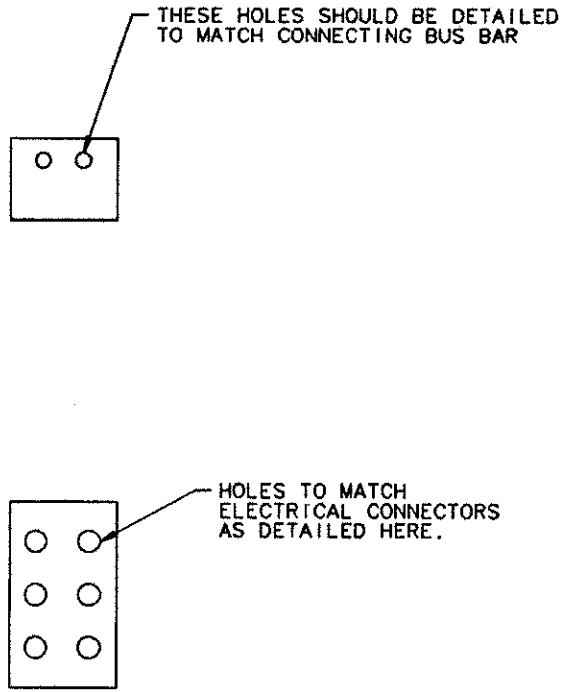
BUS BAR CONNECTIONS