5022TA

BELOW-THE-HOOK LIFTING DEVICE
Engineering Note Cover Page

Lifting Device Numbers:

FNAL Site No/ _____ Div. Specific No. PPD 198 Asset No. _____

If applicable — If applicable — If applicable

ASME B30.20 Group: (check one)
- [X] Group I Structural and Mechanical Lifting Devices
- [ ] Group II Vacuum Lifting Devices
- [ ] Group III Magnets, Close Proximity Operated
- [ ] Group IV Magnets, Remote Operated

Device Name or Description LARTF PLATFORM FIXTURE

Device was (check all applicable)
- [ ] Purchased from a Commercial Lifting Device Manufacturer. Mfg Name _____
- [X] Designed and Built at Fermilab
- [ ] Designed by Fermilab and Built by a Vendor. Assy drawing number _____
- [ ] Provided by a User or other Laboratory
- [ ] Other: Describe _____

Engineering Note Prepared by Kilmer Jim Date 3/3/2015

Engineering Note Reviewed by [signature] Date 3/11/15

Lifting Device Data:

Capacity 10000

Fixture Weight 20#

Service: [ ] normal [ ] heavy [ ] severe (refer to B30.20 for definitions)

Duty Cycle _____ 8, 16 or 24 hour rating (applicable to groups III, and IV)

Inspections Frequency EACH TIME

Rated Load Test by FNAL (if applicable) Date 2/26/15 Load 12500

[ ] Check if Load Test was by Vendor and attach the certificate

Satisfactory Load Test Witnessed by: Tom Griffin / Tom Olszanowski

Signature (of Load Test Witness) [signature] / [signature]

Notes or Special Information:

MicroBooNE Intermediate Platform Lifting Fixture Note
James Kilmer
2/28/2015

This lifting fixture is used to move the frame for the MicroBooNE intermediate platform in and out of LArTF. In particular the frame will not fit through the building roll-up door unless it is set on a specially designed cart. This fixture is necessary to put the frame on or off the cart. The fixture is designed and fabricated in accordance with ASME B30.20 and ASME BTH-1-2011. The fixture is shown in drawing F10037970 attached.

This fixture is in design catagory A and service class zero. It was designed specifically for this operation and is not planned to be used for other purposes. Never-the-less consider the fixture as used in more serious service and use Nd = 3 for the nominal design factor. Now calculate the allowable stress values:

$F_y := 36000 \cdot psi$ Yield for A-36 steel

$F_u := 58000 \cdot psi$

$N_d := 3$

$F_t := \frac{F_y}{N_d} = 1.2 \times 10^4 \cdot psi$ Allowable tensile stress

$F_v := \frac{F_y}{N_d \cdot \sqrt{3}} = 6.928 \times 10^3 \cdot psi$ Allowable shear stress

$F_b := \frac{1.10 \cdot F_y}{N_d} = 1.32 \times 10^4 \cdot psi$ Allowable bending stress

First look at the lug. It is welded to the plate with 1/2" fillet welds all around the lug and using E70 welding rod. The weld is in tension.

$l_{weld} := 2 \cdot 4 \cdot in + 2 \cdot 1 \cdot in = 10 \cdot in$ Weld length

$t_{weld} := \frac{.5 \cdot in}{\sqrt{2}} = 0.354 \cdot in$ Weld Throat distance

$A_{weld} := l_{weld} \cdot t_{weld} = 3.536 \cdot in^2$ Weld area

$P := 10000 \cdot lbf$ Fixture load (maximum)

$\sigma_{weld} := \frac{P}{A_{weld}} = 2.828 \times 10^3 \cdot psi$ Tensile load on the weld

$E70 := 70000 psi$

From ASME BTH-1-2011 paragraph 3-3.4.1 (a) the design strength of the weld in tension is:

$$A_{weld} \cdot F_t = 4.243 \times 10^4 \cdot lbf$$

Since this force is more than the fixture load the weld is OK.

The fixture is connected to the crane with a shackle. The pin bears on the lug.

$t_{plate} := 1 \cdot in$

$PIN_{proj} := 1 \cdot in$ Pin projection onto lug

$A_{proj} := t_{plate} \cdot PIN_{proj} = 1 \cdot in^2$ Projected area of pin

$\sigma_{bearing} := \frac{P}{A_{proj}} = 1 \times 10^4 \cdot psi$ Bearing stress of the pin to plate

$F_p := \frac{1.25 \cdot F_y}{N_d} = 1.5 \times 10^4 \cdot psi$ Allowable bearing stress from paragraph 3-3.3.4

The bearing stress is OK.

Now look at the other failures possible to the lug based on paragraph 3-3.3.1. First look at the allowable tensile strength through the pin hole

$D_h := 1.06 \cdot in$ Hole diameter

$D_p := 1.00 \cdot in$ Pin diameter

$$C_r := 1 - 0.275 \cdot \sqrt{\left(1 - \frac{D_p^2}{D_h^2}\right)} = 0.909$$

$b_e := 1.38 \cdot in - D_h = 0.32 \cdot in$ Actual width of pin connected plate between the edge of the hole and edge of the plate

$$b_{eff} := b_e \cdot 0.6 \cdot \frac{F_u}{F_y} \cdot \sqrt{\frac{D_h}{b_e}} = 0.563 \cdot in$$

Now calculate the allowable tensile strength through the pinhole:

$$P_{tpin} := C_r \cdot \frac{F_u}{1.20 \cdot N_d} \cdot 2 \cdot t_{plate} \cdot b_{eff} = 1.649 \times 10^4 \cdot lbf$$

Since this strength is larger than the fixture load the lug is OK for tensile.

Find the allowable single plane fracture strength beyond the pinhole

$$R := 1.38 \cdot in$$

$$P_b := C_r \cdot \frac{F_u}{1.20 \cdot N_d} \cdot \left[1.13 \cdot \left[\left(R - \frac{D_h}{2} \right) + \frac{0.92 \cdot b_e}{1 + \frac{b_e}{D_h}} \right] \right] \cdot t_{plate} = 1.78 \times 10^4 \cdot lbf$$

Since Pb is larger than the fixture load the lug is OK for this mode of failure.

Finally for the lug find the allowable double plane shear strength beyond the pinhole.

$$\phi := 55 \cdot \frac{D_p}{D_h} = 51.887$$

$$a := b_e$$

Actual dimension of lug
from edge of hole to edge of the plate

$$A_v := 2 \cdot \left[a + \frac{D_p}{2} \cdot (1 - \cos(\phi)) \right] \cdot t_{plate}$$

$$A_v = 1.69 \cdot in^2$$

Total area of the two shear planes

$$P_v := \frac{0.70 \cdot F_u}{1.20 \cdot N_d} \cdot A_v = 1.906 \times 10^4 \cdot lbf$$

This shear strength is larger than the fixture load so the lug is OK for this failure too.

Next consider the flat plate and the bolts. There are four bolts 3/4"-10 UNC which are grade 8. The grade 8 bolts have properties similar to Structural high strengtht bolts with ASTM 490 specification. From AISC Manual of Steel Construction, Ninth Edition on page 4-3 Table I-A the allowable load in tension for A490 bolts of that size is 23.9 kips. This is far larger than the total load for the fixture of 10 kips spead over the four bolts. Hence the bolts are fine for this application.

To model the plate assume it is a beam as in Case 7 on page 2-298 of the AISC manual of a simple beam with a concentrated load at the center.

$b := 8 \cdot in$ $\quad$ $h := 1 \cdot in$ $\quad$ "beam" properties

$$I := \frac{b \cdot h^3}{12} = 0.667\ in^4$$ "beam" moment of inertia

$$l := 6.12 \cdot in \qquad c := .5 \cdot in$$

$$M_{max} := \frac{P \cdot l}{4} = 1.53 \times 10^4\ lbf \cdot in$$

$$f_b := \frac{M_{max} \cdot c}{I} = 1.147 \times 10^4\ psi$$

Since fb is less than Fb calculated above the bending stress is less than allowable and the fixture is OK.

DESCRIPTION: MINI BOONE LIFTING PLATE WELDMENT
CATEGORY: WELDMENT PROJECT:

REV	REVISION CONTROL DOCUMENT	DATES	SIGNATURES	
-	F10037970---RCD		DRAWN	
			APPROVED	

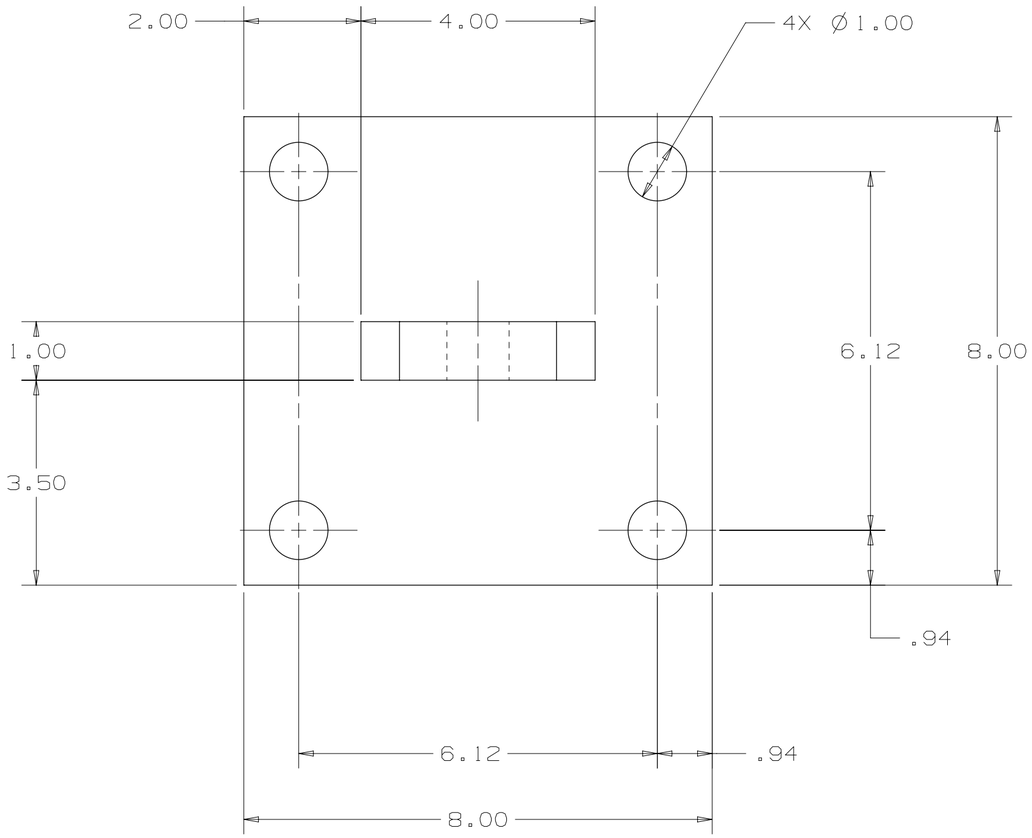

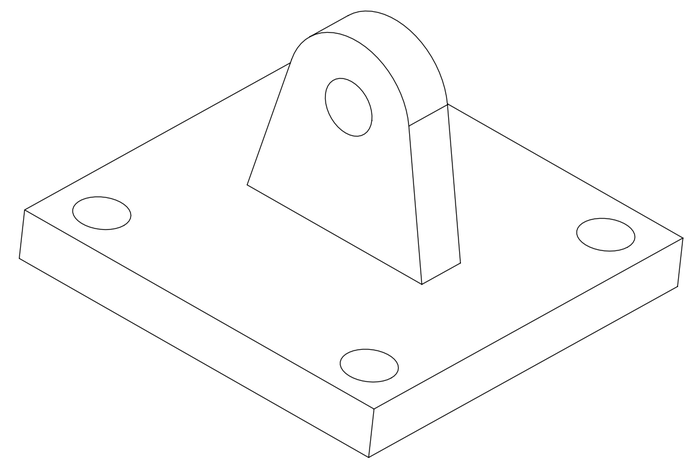

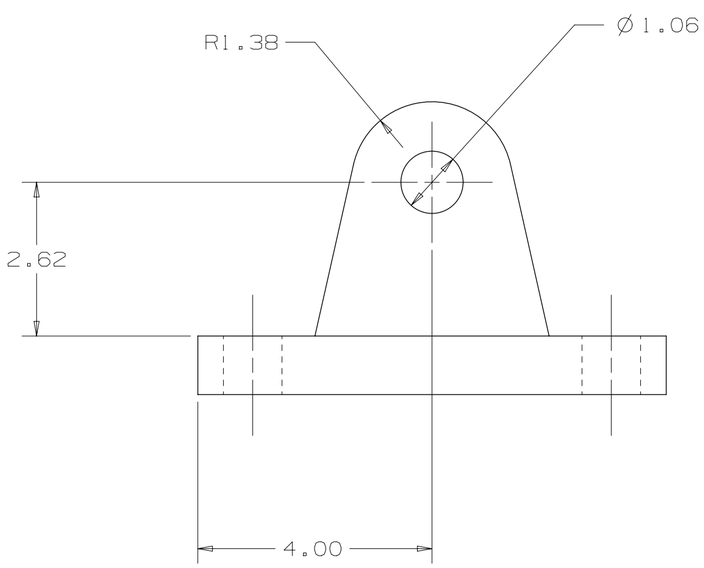

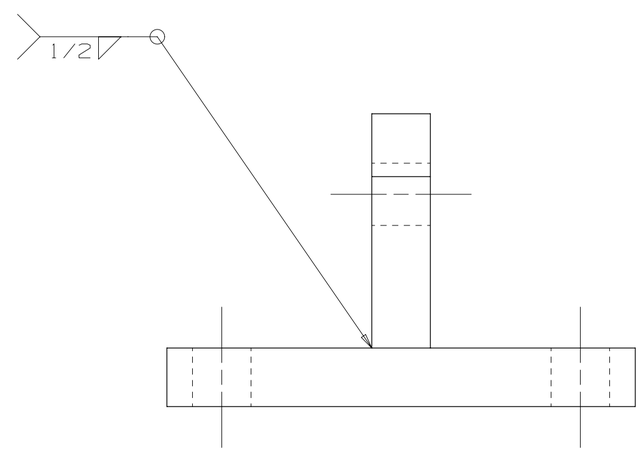

UNLESS OTHERWISE SPECIFIED				
±.X	±.XX	±.XXX	±X/X	±X°
---	.03	---	---	1°

BREAK ALL SHARP EDGES .015 MAX.
DO NOT SCALE DRAWING
DIMENSIONS BASED ON ASME Y14.5-2009
MAX. ALL MACH SURFACES 125
DRAWING UNITS: INCHES

DRAWN	G.SMITH	DATE	27-Feb-2015
CHECKED		DATE	
APPROVED		DATE	
USED ON			
MATERIAL	STEEL		
GROUP: Particle Physics Mechanical Support		CAGE CODE: 0U5R6	

FERMI NATIONAL ACCELERATOR LABORATORY
UNITED STATES DEPARTMENT OF ENERGY

NAME
MINI BOONE LIFTING PLATE WELDMENT

SCALE	SIZE	DRAWING NUMBER	SHEET	REV
1:2	C	F10037970	1 OF 1	-

EXIT

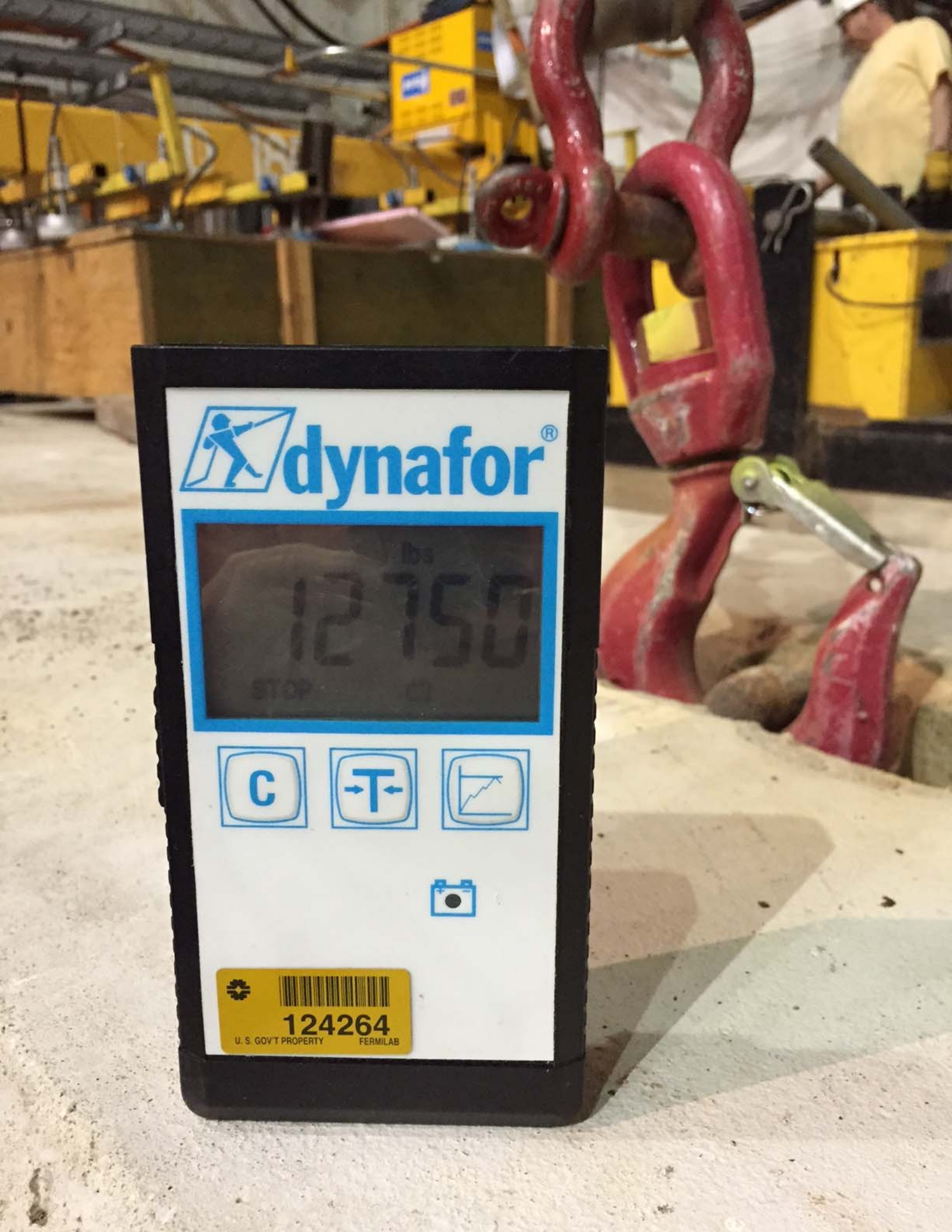
dynafor®
lbs
12750
STOP
C
T
124264
U. S. GOV'T PROPERTY
FERMILAB