FERMILAB ENGINEERING NOTE	SECTION	PROJECT	SERIAL-CATEGORY	PAGE
	C	E-831		

SUBJECT

NAME: PETER DEVERE

DATE: 8-18-95

REVISION DATE

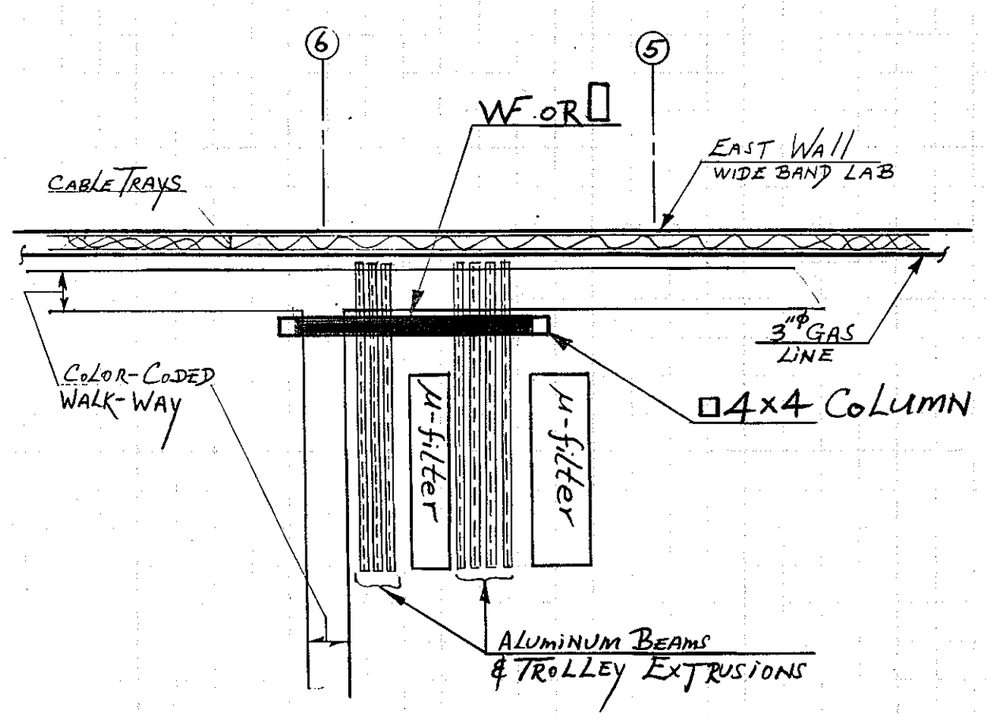

NOT TO SCALE:

SUPPORT FRAME LOCATION
ALTERNATIVE 1

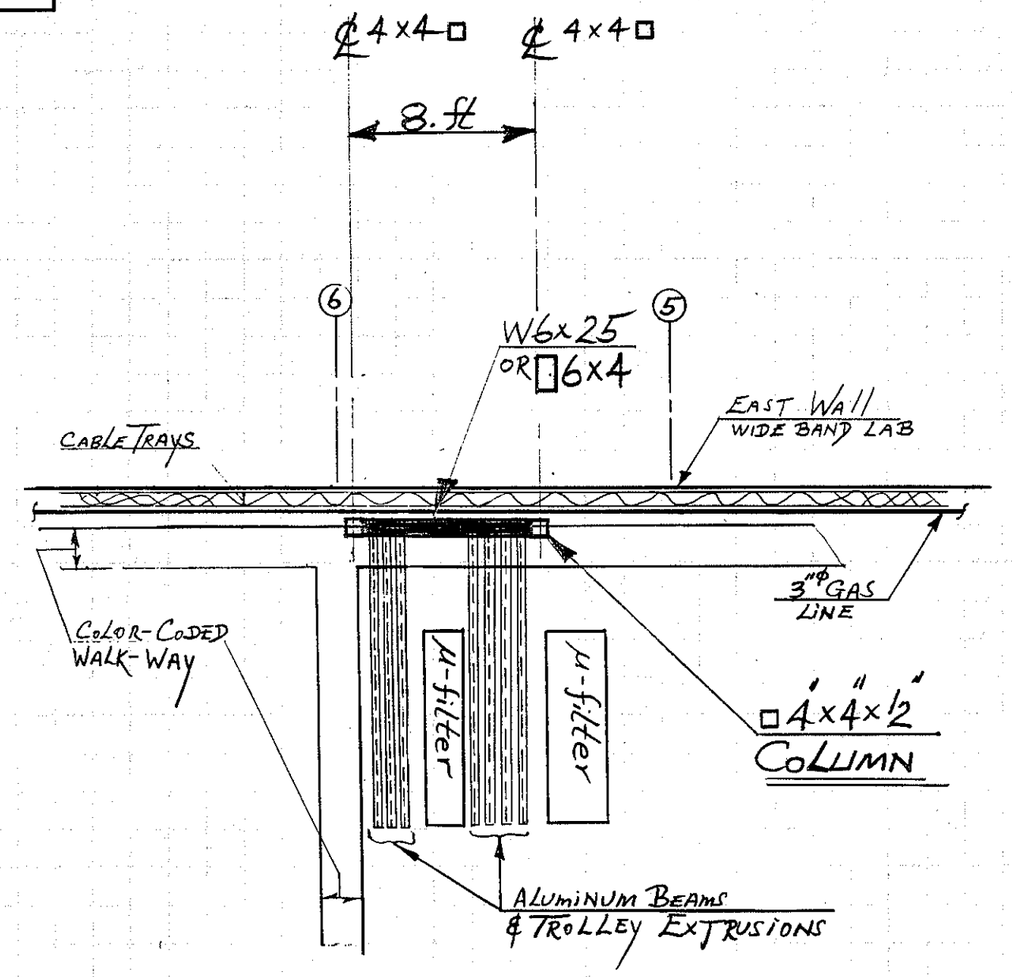

NOT TO SCALE:

SUPPORT FRAME LOCATION
ALTERNATIVE 2

SKETCH No. 1
ENGINEERING NOTE 008

SECTION C pg. 1 of 3

PAD 8/18/95

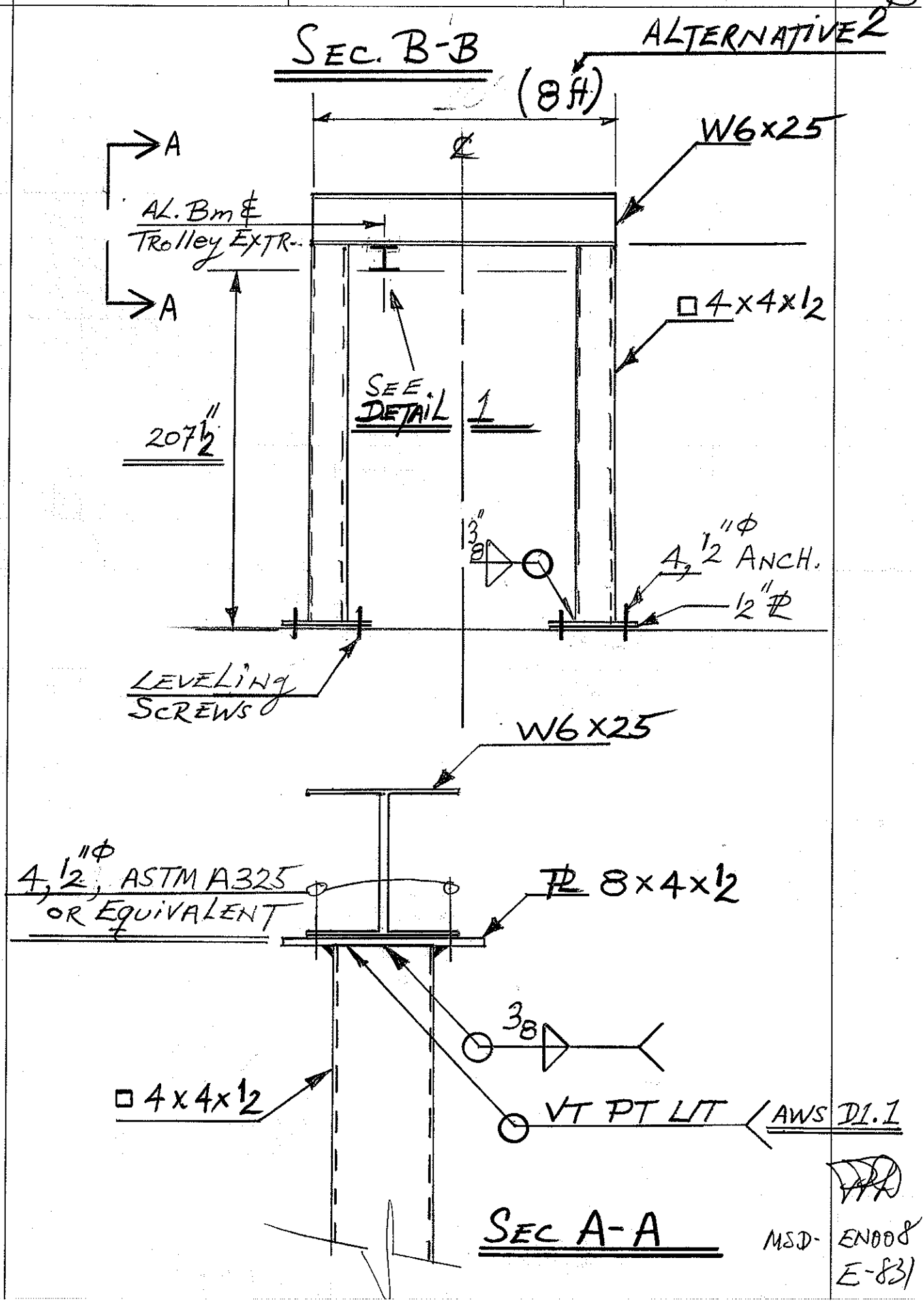

MSD- EN008
E-831

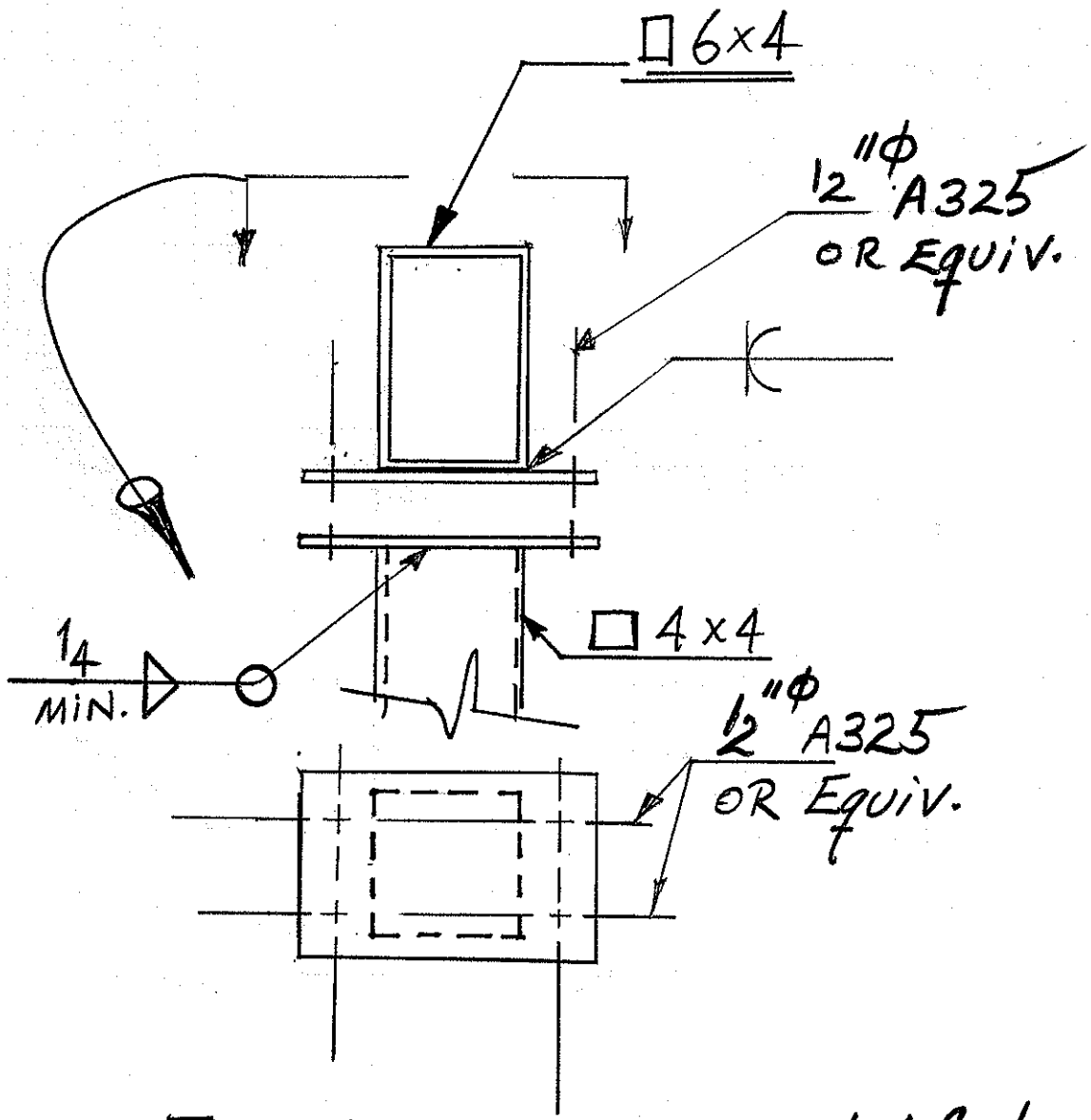

□ 6x4 BEAM-TO- □ 4x4 COL

CONNECTION DETAIL

MSD-EN008
E-831