November 26, 1990

TO: R. Andrews, Chairman, DO Safety Panel

FROM: E. M. Villegas E.M.V.

SUBJECT: Review of North Bottom Frame Modifications And Installation Procedure

Hi Dick:

I am requesting a review of the North Bottom Frame Modifications which were made necessary in order to increase space (21-1/2" to 36-1/2") between frame and north wall at the access door area, as shown in Engineering Note page No. 12A. Also a bolt and weld size check to insure picking full assembly at top, as shown in Engineering Notes pages No. 17A and 17B.

Kay Weber is in the process of doing an ANSYS analysis and should be done in about 1 to 1-1/2 weeks.

This review is necessary since the modifications and installation procedure (requested by T. Murphy and T. Lyons) represent a departure from the original game plan.

If you need any additional information, please let me know.

EV:ed

Attachment

Copies to:

T. Murphy	J. Kilmer	J. Grimson
T. Lyons	F. Lange	E. Majors
R. Wands		

need to get Kay/Eric to produce summary OF FEA she did.

FERMILAB

ENGINEERING NOTE

SECTION	PROJECT	SERIAL-CATEGORY	PAGE
			12A

SUBJECT: FRAME BOTT. MOD. (NORTH SIDE ONLY) DØ EMC MODULES

NAME: E. M. Willyard

DATE: 11-21-90

REVISION DATE:

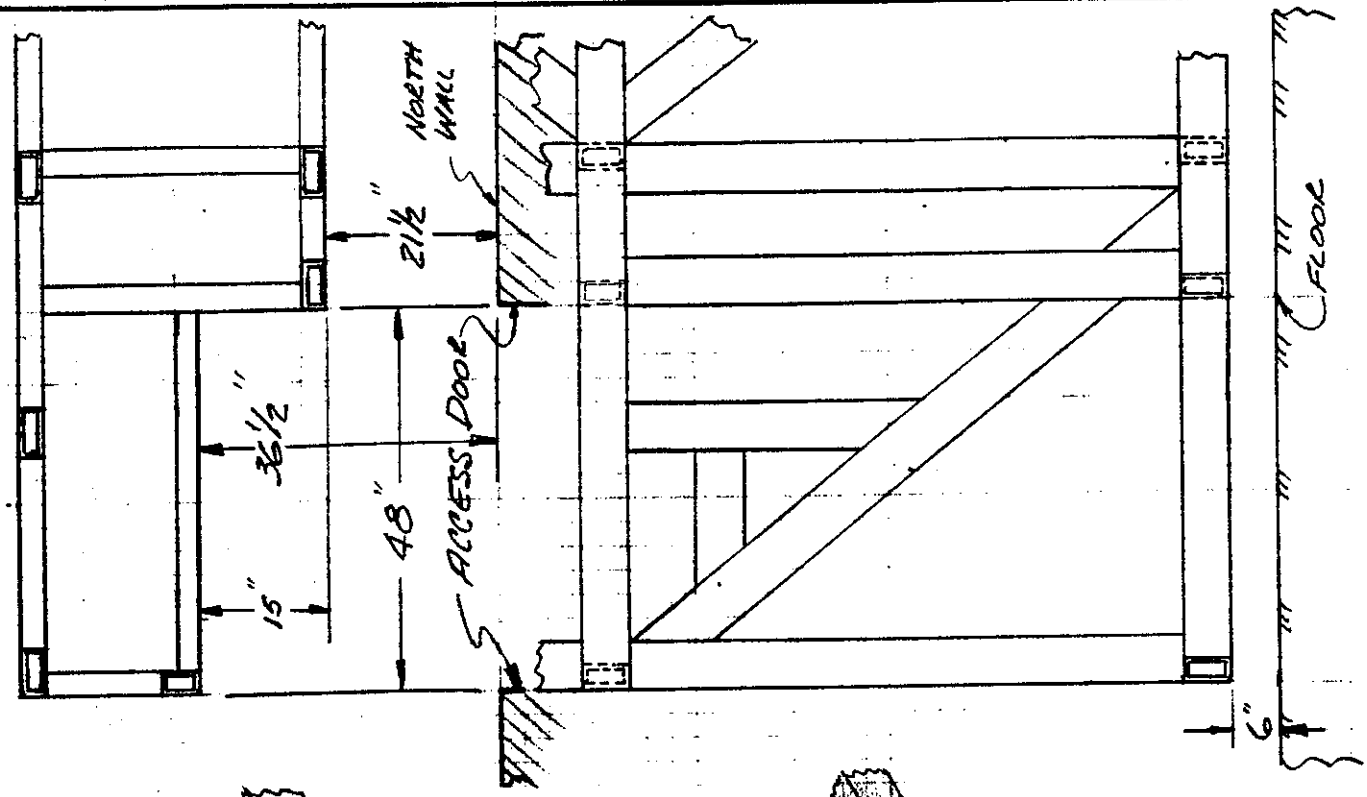

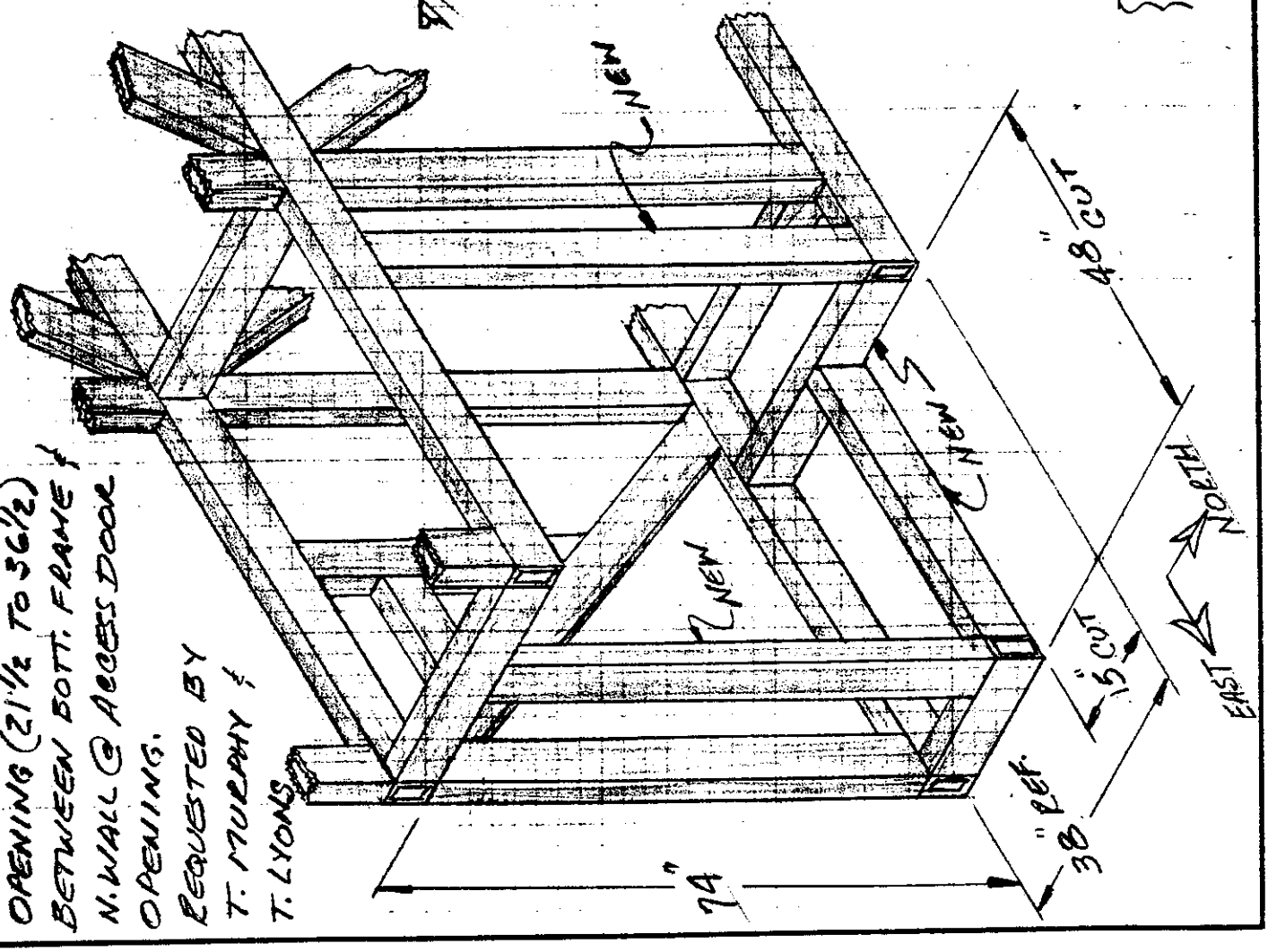

MODIFICATIONS REQ'D. TO INCREASE OPENING (21½ TO 36½) BETWEEN BOTT. FRAME & N. WALL @ ACCESS DOOR OPENING.

REQUESTED BY T. MURPHY & T. LYONS

FERMILAB
ENGINEERING NOTE

SECTION	PROJECT	SERIAL-CATEGORY	PAGE
			17A

SUBJECT: FRAME SECTION CONNECTIONS
DØ EMC MODULES (PDT)

NAME: E M Villegas
DATE: 10-31-90
REVISION DATE:

BOLT SIZE CHECK FOR FULL ASSY PICK-UP

ASSUME ONLY TWO INBOARD CONNECTIONS CARRY LOAD CONSISTING OF BOTTOM FRAME, SPACERS & INNER FRAME (13×10^3 #) PLUS MODULES 250, 253, 251, 255, 265, 266, 264 267, 275, 276, 274, & 277 (23.7×10^3 #) PLUS SAMUS (3.1×10^3 #) FOR A TOTAL LOAD OF 39.8×10^3 # SAY 40×10^3 #

THEN $P_8 = \frac{40 \times 10^3}{2} = 20 \times 10^3$ # (LOAD CARRIED BY 8, 1/2 BOLTS)

& $P = \frac{20 \times 10^3}{8} = 2.5 \times 10^3$ # (LOAD CARRIED BY 1, 1/2 BOLT)

SINCE $A_g = \frac{.5^2 \pi}{4} = .196 \text{ in}^2$

THEN $f_t = \frac{P}{A_g} = \frac{2.5 \times 10^3}{.196}$

$= 12.8 \times 10^3$ psi (DESIGN STRESS)

IS THIS OK FOR A325 (CLASS 5) BOLTS?

$F_t = .33 \times 20 \times 10^3$

$= 39.6 \times 10^3$ psi (ALLOWED STRESS)

WELD SIZE CHECK

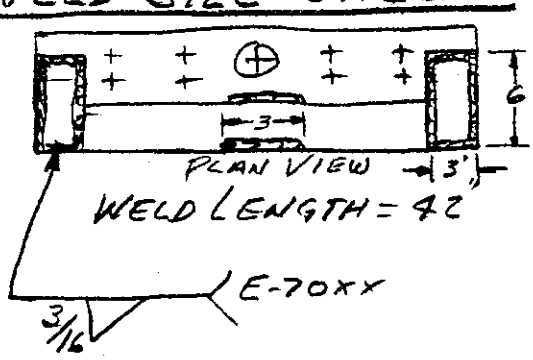

$f_v = \frac{20 \times 10^3}{42} = 476$ #/IN

SINCE $F_v = .3 \times 72 \times 10^3 \times .707$
$= 15.3 \times 10^3$ #/IN

THEN $w = \frac{f_v}{F_v} = \frac{476}{15.3 \times 10^3}$

$= .031''$ FILLET LEG SIZE REQ'D.

FERMILAB
ENGINEERING NOTE

SECTION	PROJECT	SERIAL-CATEGORY	PAGE
			178

SUBJECT: FULL ASSY. PICK-UP @ TOP SECTION DØ EMC MODULES

NAME: E.M. Villegas

DATE: 11-21-90

REVISION DATE:

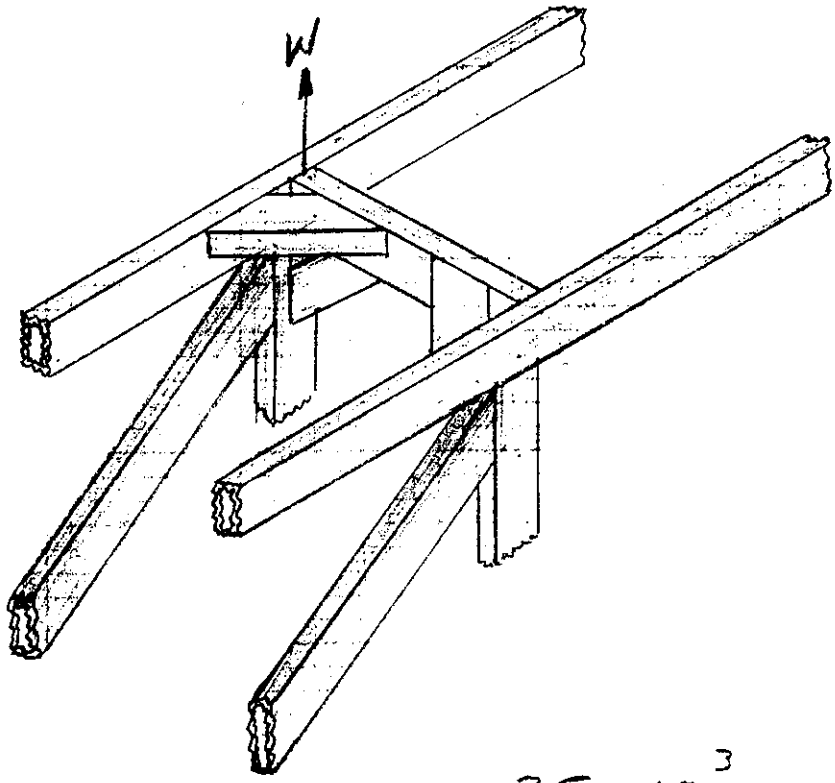

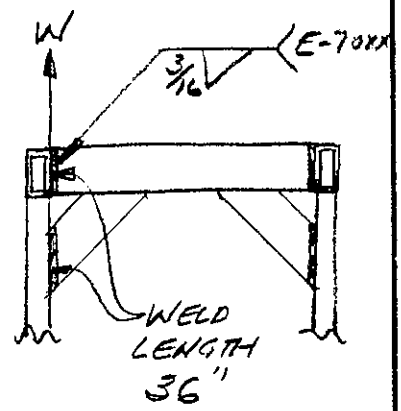

ASSUME $W = \frac{75 \times 10^3}{2} = 37.5 \times 10^3$ # (HALF OF TOTAL LOAD.)

$$f_v = \frac{37.5 \times 10^3}{36}$$
$$= 1042 \ \#/IN \ (DESIGN)$$

SINCE $F_v = .3 \times 72 \times 10^3 \times \sin 45^\circ$
$$= 15.3 \times 10^3 \ \#/IN \ (ALLOWED)$$

THEN $w = \frac{f_v}{F_v} = \frac{1042}{15.3 \times 10^3}$
$$= .068" \ (FILLET \ LEG \ SIZE \ REQ'D \ TO \ SUSTAIN \ LOAD.)$$