# DO SAFETY DESIGN REVIEW
# OF
# EF PDT TRUSSES

May 22, 1990

The following sheet lists the specifications used for the EF Truss Bolt design.

Welds are designed using an allowable value of 13,600 psi per the American Welding Society Code.

1.5.2.2 Design for rivets, bolts, and threaded parts subject to fatigue loading shall be in accordance with Appendix B, Sect. B3.

TABLE 1.5.2.1

ALLOWABLE STRESS ON FASTENERS, KSI

| Description of Fasteners | Allowable Tension[g] ($F_t$) | Allowable Shear[g] ($F_v$) | | | |
|---|---|---|---|---|---|
| | | Friction-type Connections[e,i] | | | Bearing-type Connections[i] |
| | | Standard size Holes | Oversized and Short-slotted Holes | Long-slotted Holes | |
| A502, Grade 1, hot-driven rivets | 23.0[a] | | | | 17.5[f] |
| A502, Grades 2 and 3, hot-driven rivets | 29.0[a] | | | | 22.0[f] |
| A307 bolts | 20.0[a] | | | | 10.0[b,f] |
| Threaded parts meeting the requirements of Sects. 1.4.1 and 1.4.4, and A449 bolts meeting the requirements of Sect. 1.4.4, when threads are not excluded from shear planes | $0.33F_u$[a,c,h] | | | | $0.17F_u$[h] |
| Threaded parts meeting the requirements of Sects. 1.4.1 and 1.4.4, and A449 bolts meeting the requirements of Sect. 1.4.4, when threads are excluded from shear planes | $0.33F_u$[a,h] | | | | $0.22F_u$[h] |
| A325 bolts, when threads are not excluded from shear planes | 44.0[d] | 17.5 | 15.0 | 12.5 | 21.0[f] |
| A325 bolts, when threads are excluded from shear planes | 44.0[d] | 17.5 | 15.0 | 12.5 | 30.0[f] |
| A490 bolts, when threads are not excluded from shear planes | 54.0[d] | 22.0 | 19.0 | 16.0 | 28.0[f] |
| A490 bolts, when threads are excluded from shear planes | 54.0[d] | 22.0 | 19.0 | 16.0 | 40.0[f] |

[a] Static loading only.

[b] Threads permitted in shear planes.

[c] The tensile capacity of the threaded portion of an upset rod, based upon the cross-sectional area at its major thread diameter, $A_b$, shall be larger than the nominal body area of the rod before upsetting times $0.60F_y$.

[d] For A325 and A490 bolts subject to tensile fatigue loading, see Appendix B, Sect. B3.

[e] When specified by the designer, the allowable shear stress, $F_v$, for friction-type connections having special faying surface conditions may be increased to the applicable value given in Appendix E.

[f] When bearing-type connections used to splice tension members have a fastener pattern whose length, measured parallel to the line of force, exceeds 50 inches, tabulated values shall be reduced by 20 percent.

[g] See Sect. 1.5.6.

[h] See Appendix A, Table 2, for values for specific ASTM steel specifications.

[i] For limitations on use of oversized and slotted holes, see Sect. 1.23.4.

TABLE 1.6.3

ALLOWABLE TENSION STRESS ($F_t$) FOR FASTENERS IN BEARING-TYPE CONNECTIONS

| Description of Fastener | Threads Not Excluded from Shear Planes | Threads Excluded from Shear Planes |
|---|---|---|
| Threaded parts | | |
| A449 bolts over 1½-in. diameter | $0.43F_u - 1.8f_v \leq 0.33F_u$ | $0.43F_u - 1.4f_v \leq 0.33F_u$ |
| A325 bolts | $55 - 1.8f_v \leq 44$ | $55 - 1.4f_v \leq 44$ |
| A490 bolts | $68 - 1.8f_v \leq 54$ | $68 - 1.4f_v \leq 54$ |
| A502 Grade 1 rivets | $30 - 1.3f_v \leq 23$ | |
| A502 Grades 2 and 3 rivets | $38 - 1.3f_v \leq 29$ | |
| A307 bolts | $26 - 1.8f_v \leq 20$ | |

AISC CODE

1

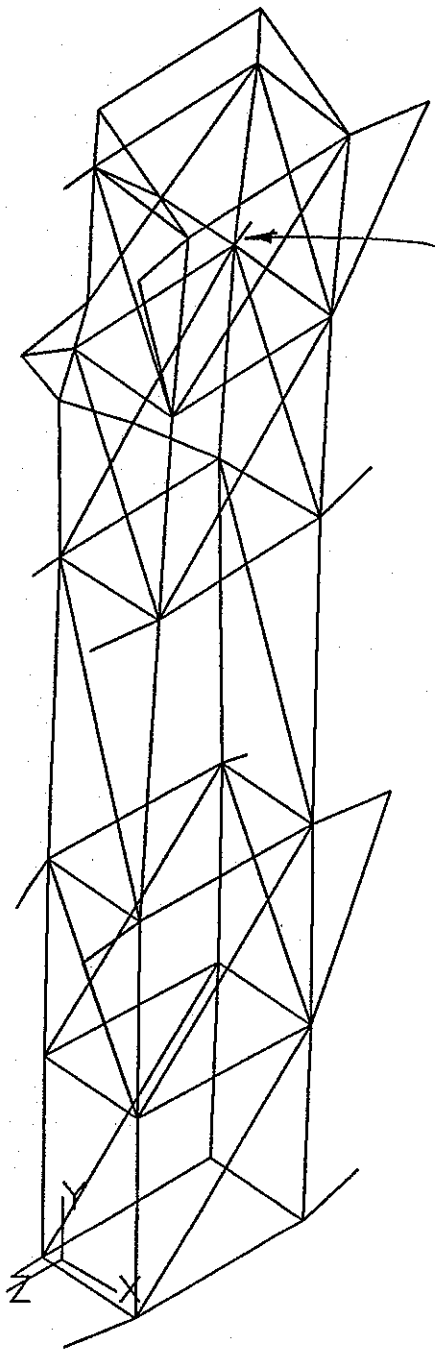


7670 psi

ALL OTHER STRESSES ARE LESS THAN 4000 psi

ANSYS 4.4
FEB 9 1990
12:45:58
PLOT NO. 1
POST1 DISPL.
STEP=1
ITER=1
DMX =0.027244

DSCA=636.674
XV =1
YV =1
ZV =1
DIST=173.455
XF =15.25
YF =162.5
ZF =-27.5

EF VERTICAL TRUSS 12-13-89

1

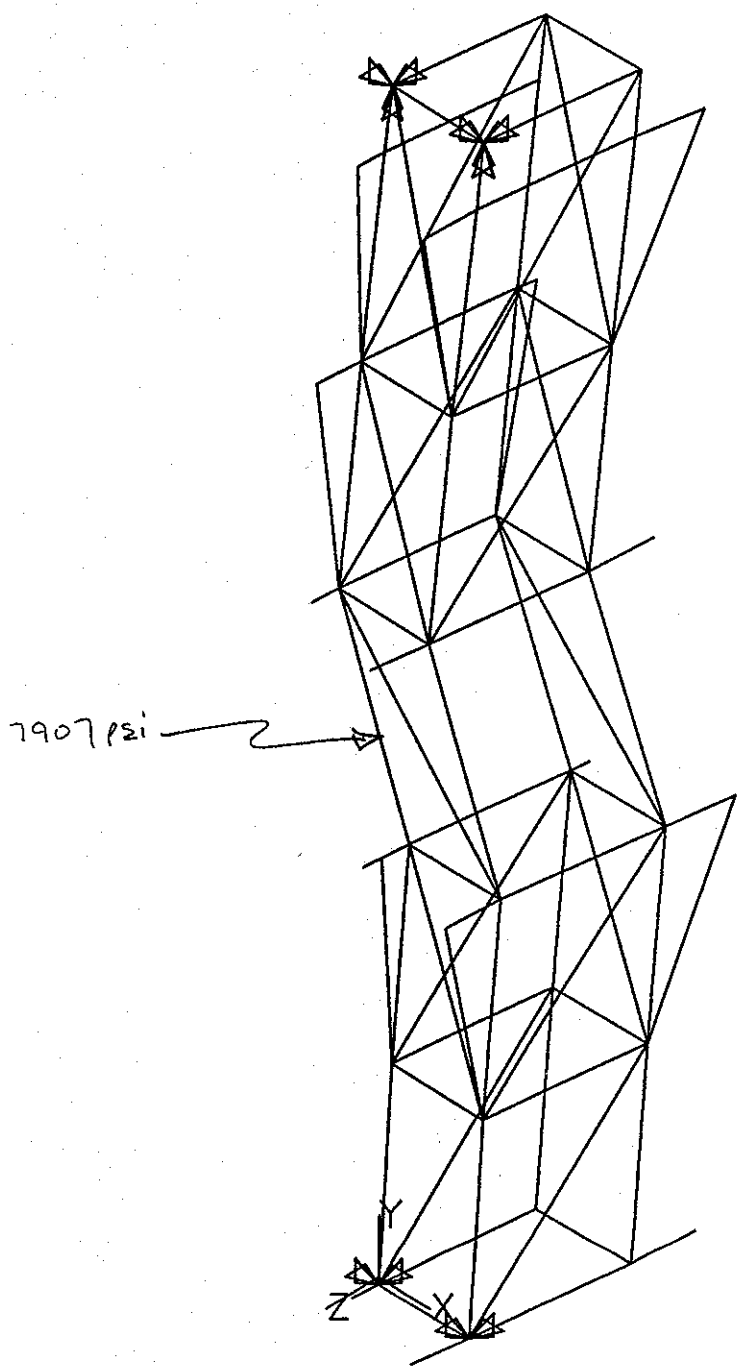


ANSYS 4.4
DEC 14 1989
16:11:37
PLOT NO. 1
POST1 DISPL.
STEP=1
ITER=1
DMX =0.130178
BC SYMBOLS

DSCA=133.245
XV =1
YV =1
ZV =1
DIST=173.455
XF =15.25
YF =162.5
ZF =-27.5

EF VERTICAL TRUSS 12-13-89

EF Truss - Welds

2-12-90

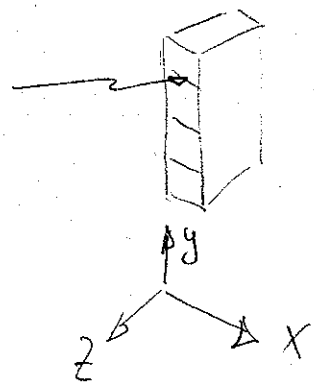


Global Coord

local:

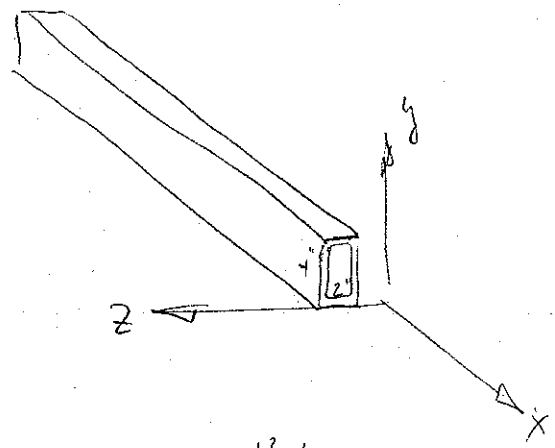


$I_{zz} = (.707)(.188)\frac{d^2}{6}(3b+d) = (.707)(.188)\left(\frac{16}{6}\right)(6+4) = 3.54$

$I_{yy} = (.707)(.188)\left(\frac{4}{6}\right)(12+2) = 1.24$

$J = (.707)(.188)\frac{(b+d)^3}{4} = \frac{6^3}{6} = 4.78$

$r = \frac{(4^2+2^2)^{1/2}}{2} = \frac{\sqrt{20}}{2} = 2.24$

$A = (.707)(.188)(12) = 1.59$

$S_x = F_x/A = 852.44/A = 534.45$ psi

$S_y = F_x/A = 64.8/A = 40.63$

$S_z = F_z/A = 107.8/A = 67.59$

$Sb_y = \frac{M_y c}{I_{yy}} = \frac{(2007.1)(1)}{1.24} = 1,618.63$

$Sb_z = \frac{M_z c}{I_{zz}} = \frac{(866.0)(2)}{3.54} = 488.65$

$S_{tor} = \frac{M_x r}{J} = \frac{(1074.7)(2.24)}{4.78} = 502.22$

3252 psi

$n = 13600/3252 = 4.18$

EF Vertical Truss — Welds

2-12-90

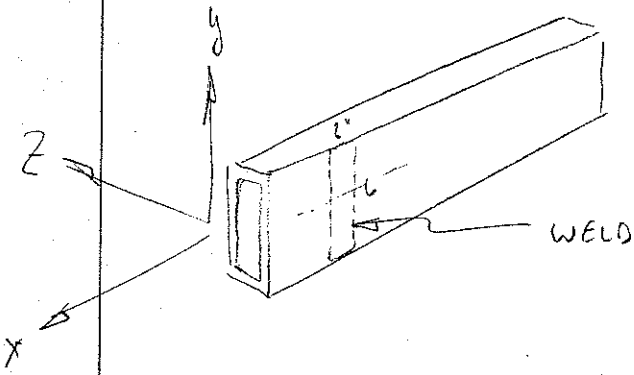


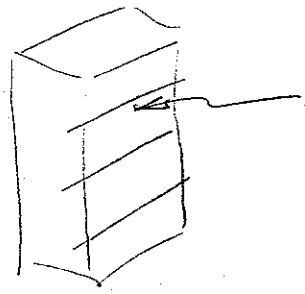

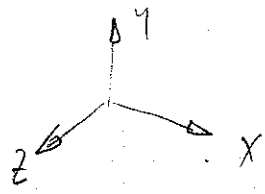


Global Coord

$$I_{xx} = (.707)(.188)\frac{d^2}{6}(3b+d) = (.707)(.188)\left(\frac{36}{6}\right)(6+6) = 9.57$$

$$I_{yy} = \qquad = (.707)(.188)\left(\frac{4}{6}\right)(18+2) = 1.77$$

$$J = (.707)(.188)\frac{(b+d)^3}{6} = (.707)(.188)\left(\frac{8^3}{6}\right) = 11.34$$

$$r = (b^2+d^2)^{1/2}/2 = (36+4)^{1/2}/2 = 3.16$$

$$A = (.707)(.188)((2+6)\cdot 2) = \qquad = 2.13$$

$$S_x = F_x/A = 1939.5/A = 911.99$$

$$S_y = F_y/A = 963.65/A = 453.13$$

$$S_z = F_z/A = 821.91/A = 386.48$$

$$S_{by} = \frac{M_y c}{I_{yy}} = \frac{(5959)(1)}{1.77} = 3366.67$$

$$S_{tor} = \frac{M_z r}{J} = \frac{(8652.4)(3.16)}{11.34} = 2412.35$$

$$S_{bx} = \frac{M_x c}{I_{xx}} = \frac{(394)(3)}{9.57} = 123.51$$

$$\Sigma = \underline{\underline{7654}} \text{ psi}$$

2-12-90

# EF TRUSS WELDS

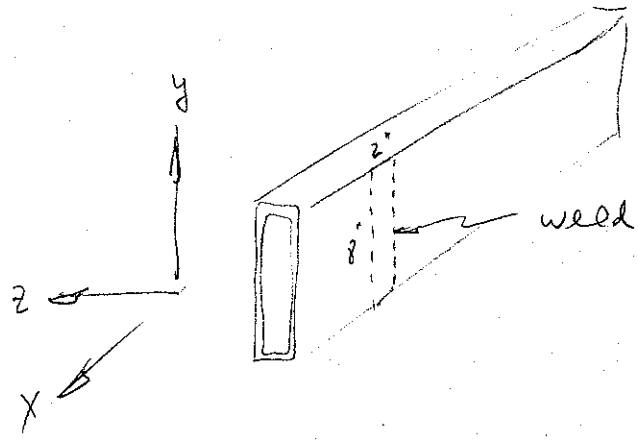


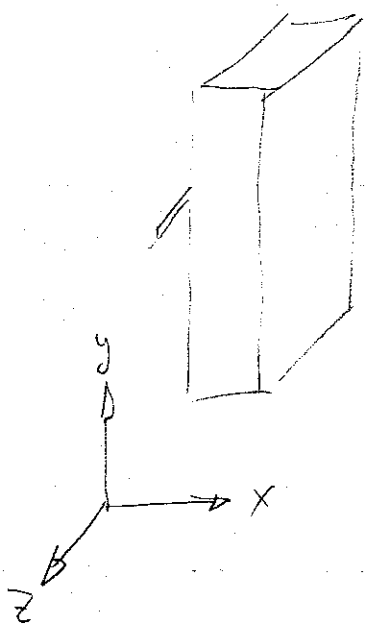


$I_{xx} = (.707)(.188)\frac{d^2}{6}(3b+d) = (.707)(.188)\left(\frac{64}{6}\right)(6+8) = 19.85$

$I_{yy} = (.707)(.188)\left(\frac{1}{6}\right)(24+2) = 2.30$

$J = (.707)(.188)\frac{(b+d)^3}{6} = (.707)(.188)\frac{(10)^3}{6} = 22.15$

$r = (b^2+d^2)^{1/2}/2 = (4+64)^{1/2}/2 = 4.12$

$A = (.707)(.188)\left[(2+8)\cdot 2\right] = \quad = 2.66$

$S_x = F_x/A = 135.69/2.66 = 51.04$

$S_y = F_y/A = 8020.7/2.66 = 3015.30$

$S_z = F_z/A = 821.91/2.66 = 309.18$

$S_{by} = \frac{M_y c}{I_{yy}} = \frac{(4931.5)(1)}{2.30} = 2144.13$

$S_{bx} = \frac{M_x c}{I_{xx}} = \frac{(172.71)(4)}{19.85} = 34.80$

$S_{tor} = \frac{M_z r}{J} = \frac{(48{,}104)(4.12)}{22.15} = 8947.86$

$\Sigma = 14{,}502$ psi

Vert EF Truss Weld Stresses

| | A | B | C | D | E | F | G | H |
|---|---|---|---|---|---|---|---|---|
| 1 | | | | | | | | |
| 2 | Weld | | | | | | | |
| 3 | Data: | Ixx | Iyy | J | r | Area | | |
| 4 | | | | | | | | |
| 5 | | 19.85 | 2.3 | 22.15 | 4.12 | 2.66 | | |
| 6 | | | | | | | | |
| 7 | Forces and Moments: | | | | | | | |
| 8 | | | | | | | | |
| 9 | Element | Fx | Fy | Fz | Mx | My | Mz | |
| 10 | | | | | | | | |
| 11 | 95 I | 135.69 | 671.92 | 224.92 | 172.71 | 778.39 | 2,338.50 | |
| 12 | 95 J | 135.69 | 655.01 | 224.92 | 172.71 | 2,595.40 | 12,290.00 | |
| 13 | | | | | | | | |
| 14 | 96 I | 0.00 | 8,013.90 | 821.91 | 0.00 | 4,931.50 | 48,104.00 | |
| 15 | 96 J | 0.00 | 8,020.70 | 821.91 | 0.00 | 0.00 | 0.00 | |
| 16 | | | | | | | | |
| 17 | 97 I | 41.53 | 238.82 | 10.53 | 3.93 | 1,455.40 | 12,480.00 | |
| 18 | 97 J | 41.53 | 180.20 | 10.29 | 3.93 | 920.61 | 23,374.00 | |
| 19 | | | | | | | | |
| 20 | | Stresses: | | | | | | |
| 21 | | | | | | | | Sum of |
| 22 | | Sx | Sy | Sz | Sbx | Sby | S-torsion | Stresses: |
| 23 | | | | | | | | |
| 24 | 95 I | 51 | 253 | 85 | 35 | 338 | 435 | 1,196 |
| 25 | 95 J | 51 | 246 | 85 | 35 | 1,128 | 2,286 | 3,831 |
| 26 | | | | | | | | 0 |
| 27 | 96 I | 0 | 3,013 | 309 | 0 | 2,144 | 8,948 | 14,413 |
| 28 | 96 J | 0 | 3,015 | 309 | 0 | 0 | 0 | 3,324 |
| 29 | | | | | | | | 0 |
| 30 | 97 I | 16 | 90 | 4 | 1 | 633 | 2,321 | 3,064 |
| 31 | 97 J | 16 | 68 | 4 | 1 | 400 | 4,348 | 4,836 |

Detail of Stress at 96 I weld

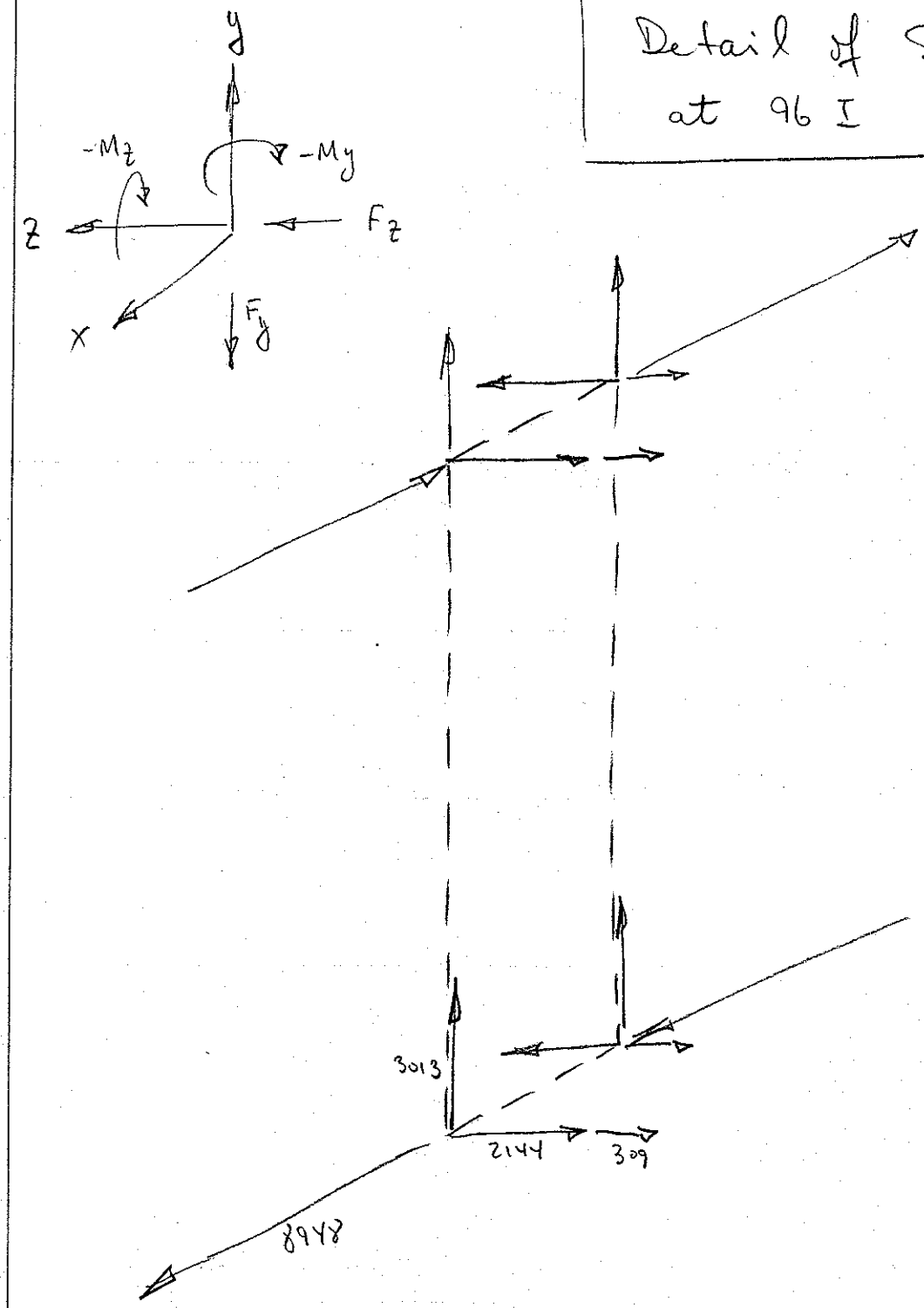


Resultant = 9755 psi

# ET VERTICAL TRUSS SUPPORT

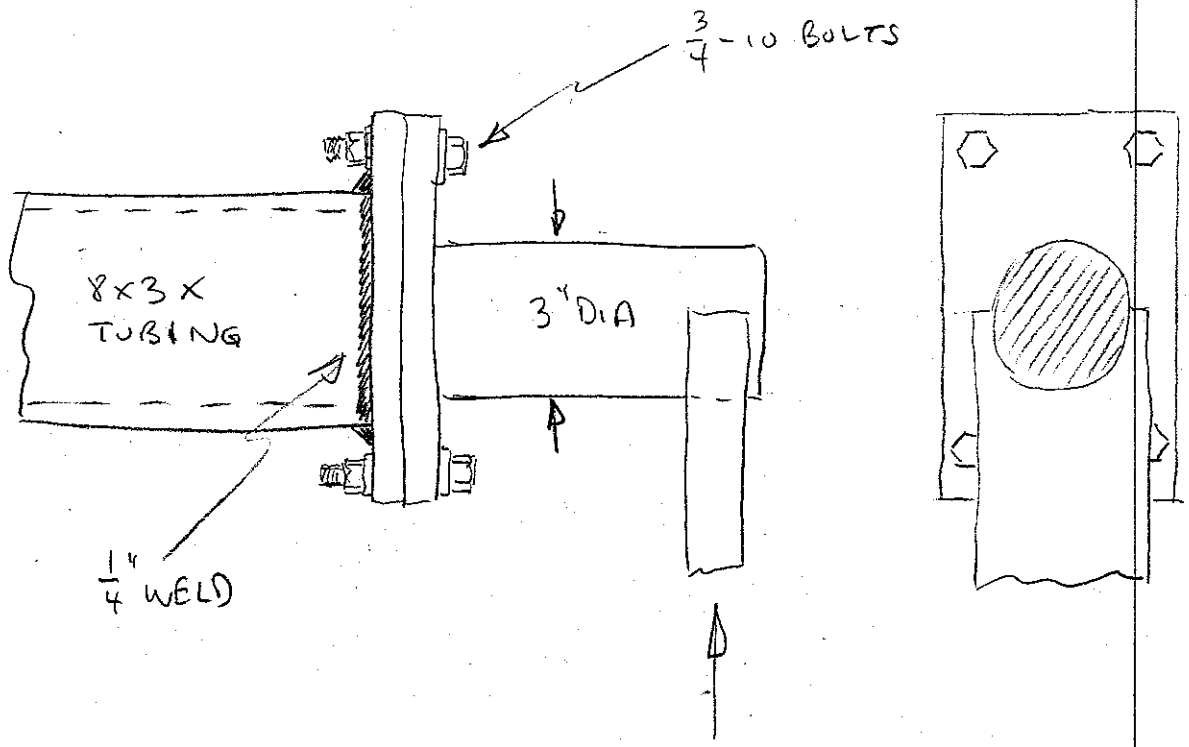


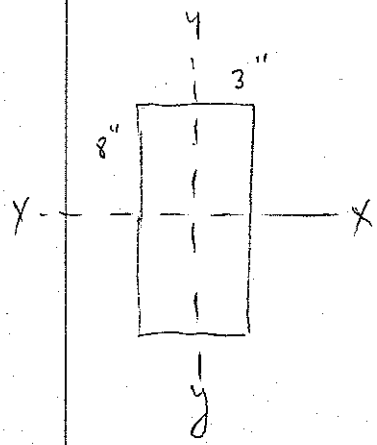


## Weld Properties:

$$I_{xx} = (.707)(.25)\left(\frac{d^2}{6}\right)(3b+d) = \underline{32.05} \text{ in}^4$$

$$I_{yy} = \underline{7.16} \text{ in}^4$$

$$J = (.707)(.250)\left[\frac{(b+d)^3}{6}\right] = \underline{39.21} \text{ in}^4$$

$$r = \frac{\sqrt{b^2+d^2}}{2} = \underline{4.27}$$

$$\text{Area} = (22)(.707)(.25) = 3.89 \text{ in}^2$$

3-29-90

EF Vertical Trans Support

Stresses in round shaft.

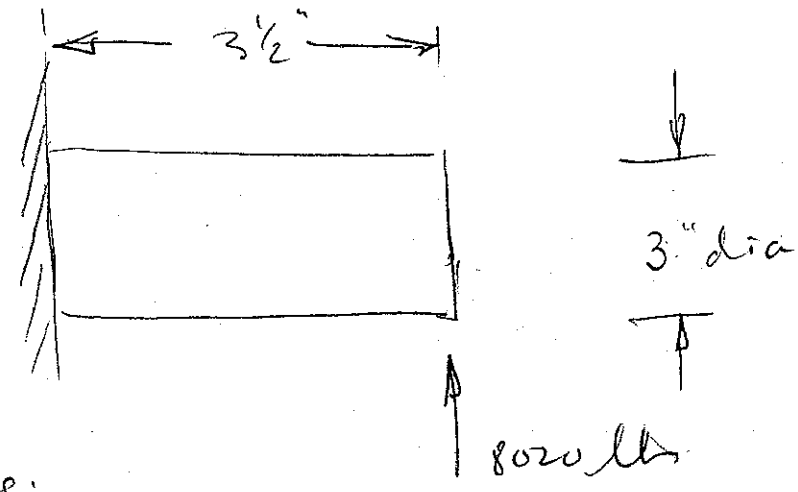


Bending:

$$I = \frac{\pi d^4}{64} = \frac{\pi\, 3^4}{64} = 3.98 \text{ in}^4$$

$$\sigma = \frac{Mc}{I} = \frac{(8020)(3.5)(1.5)}{(3.98)}$$

$$= \underline{10,590 \text{ psi}}$$

Shear: $\frac{8020}{(\pi)(r^2)} = \underline{1,135 \text{ psi}}$

Combined = $\underline{10,650 \text{ psi}}$

3-29-90

EF Vert. Cross Support

$\frac{1}{2}$" Weld

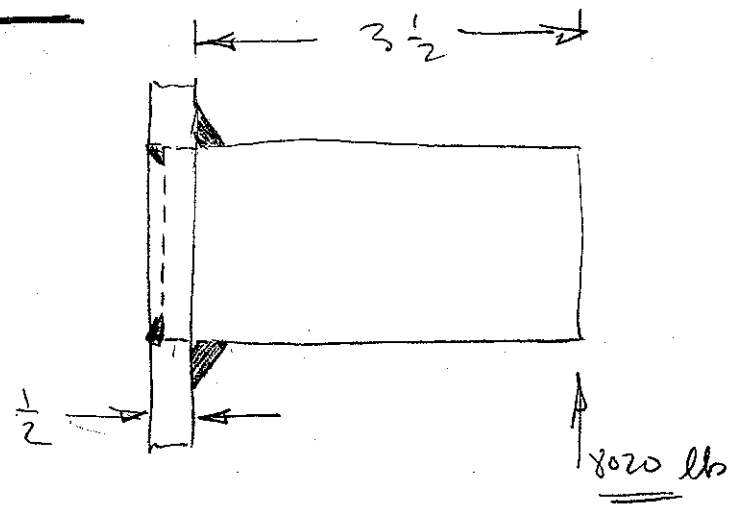


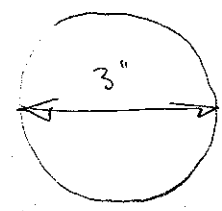


$I = \pi r^3 (.707)(h)$

$= 3.75 \text{ in}^4$

Area $= 1.414 \pi h r$

$= 3.33 \text{ in}^2$

$\sigma = \frac{Mc}{I} = \frac{(8020)(3.5)(1.5)}{3.75} = 11{,}234 \text{ psi}$

$\text{Shear} = \frac{8020}{\text{Area}} = \frac{8020}{3.33} = 2{,}407 \text{ psi}$

$\text{Total Stress} = \sqrt{11{,}234^2 + 2407^2}$

$= 11{,}489 \text{ psi}$

Allowable = 13,600 psi

3-29-90

# Ef Vert. Truss Support — Bolts

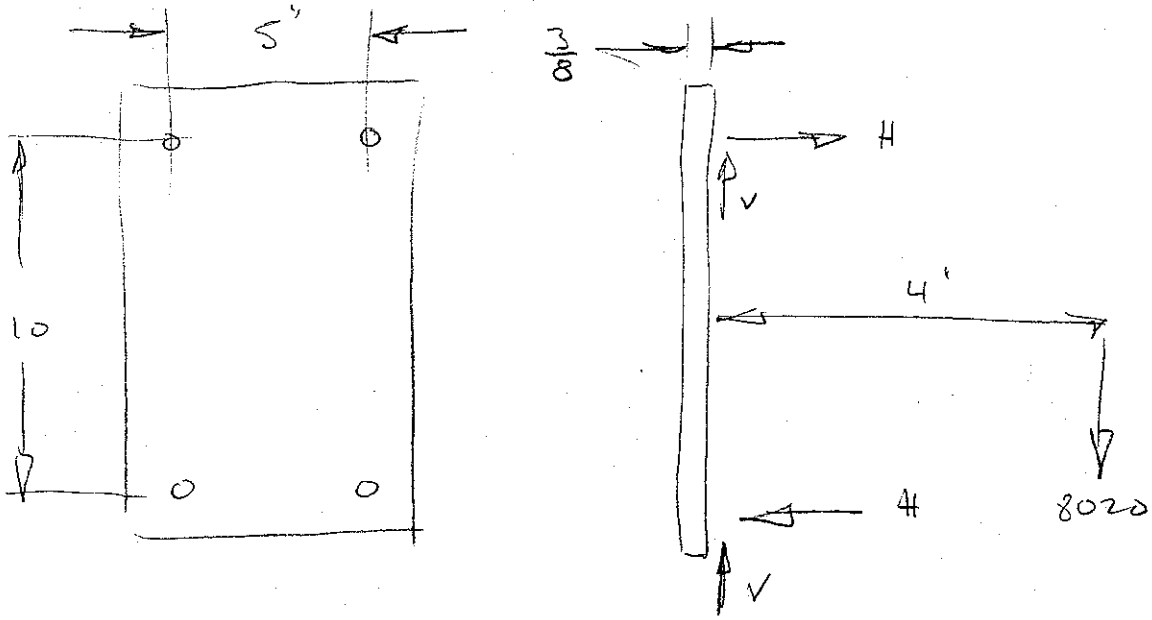


$10H = (8020)(4)$

$H = \underline{3208}$ lbs. $\Longrightarrow$ $\underline{1604}^{\#}$ per bolt

$V = \dfrac{8020}{4} =$ $\underline{2005}^{\#}$ per bolt

3/4" A325 Bolts: (allowable stress = 21,000 psi)

Shear stress: $\dfrac{2005}{.334} = \underline{6002}$ psi OK

Allow tension: $55 - 1.8f_v \leq 44{,}000$ psi

$55 - (1.8)(6) = 44{,}200$ psi

Actual tension: $\dfrac{1604}{.334} = \underline{4800}$ psi $\therefore$ O.K

EF VERTICAL TRUSS SUPPORT
— WELD TO TRUSS MEMBER

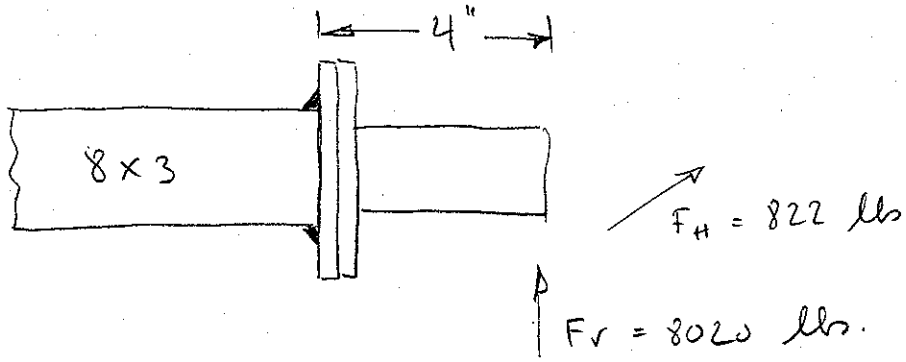


Use Weld properties from previous calculations

Bending Stresses:

Vertical: $\sigma = \frac{Mc}{I} = \frac{(8020)(4)(4)}{32.05} = \underline{4004}$ psi

Horizontal: $\sigma = \frac{Mc}{I} = \frac{(822)(4)(1.5)}{7.16} = \underline{689}$ psi

Max Bending Stress $= \boxed{\underline{4693} \text{ psi}}$

Shear Stresses:

Vertical: $\frac{F_V}{A} = \frac{8020}{3.89} = \underline{2062}$ psi

Horizontal: $\frac{F_H}{A} = \frac{822}{3.89} = \underline{211}$ psi

Resultant: $\boxed{\underline{2072} \text{ psi}}$

Total Stress: $\underline{5130}$ psi

EF Vertical Truss Support 3-30-90

BUCKLING ?? ROOM AVAILABLE FOR GUSSETTS.

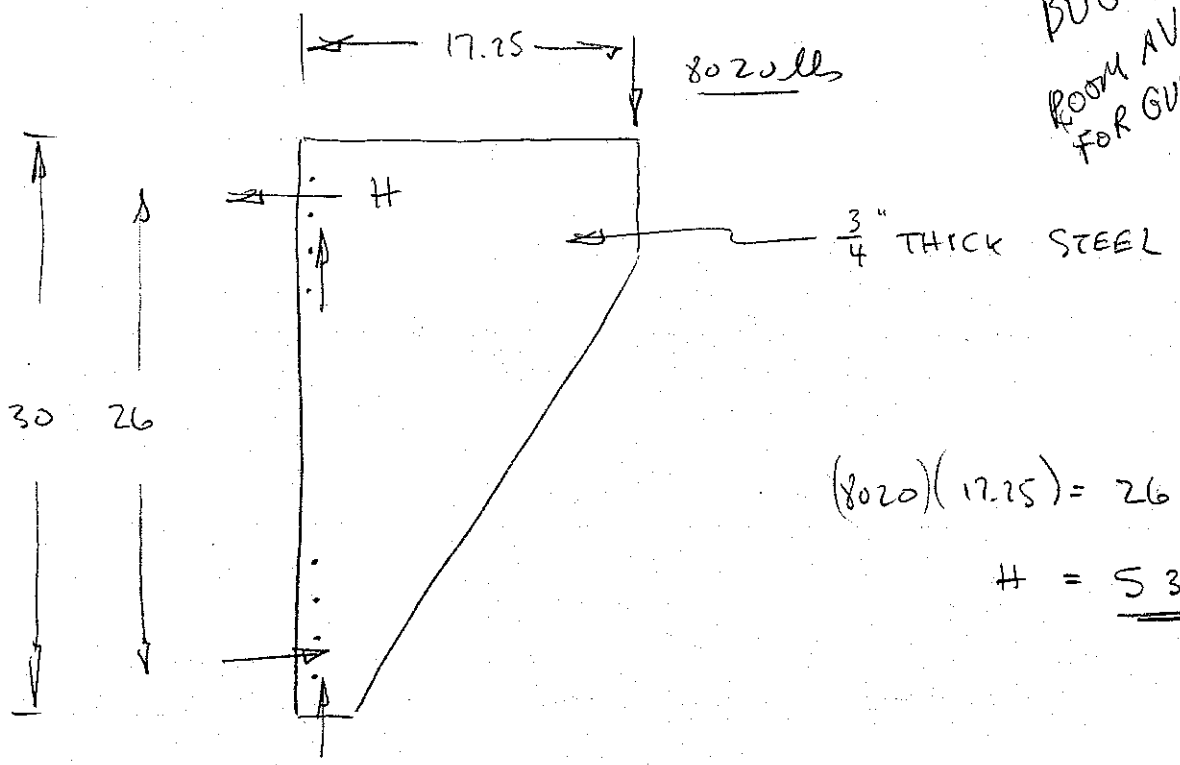


$(8020)(17.25) = 26\,H$

$H = \underline{5\,320}$ lbs

3/4" Bolts [A 325] Assume 2 Bolts:

V. Shear: $\dfrac{8020}{(2)(.334)} = \underline{12,005}$ psi

H. Shear: $\dfrac{5320}{.334} = \underline{15,930}$ psi

Resultant $= \underline{19,950}$ psi

Allowable shear: 21,000 psi

Use a total of 8 bolts, Shear ~ 5000 psi

The following pages cover the EF Horizontal Truss.

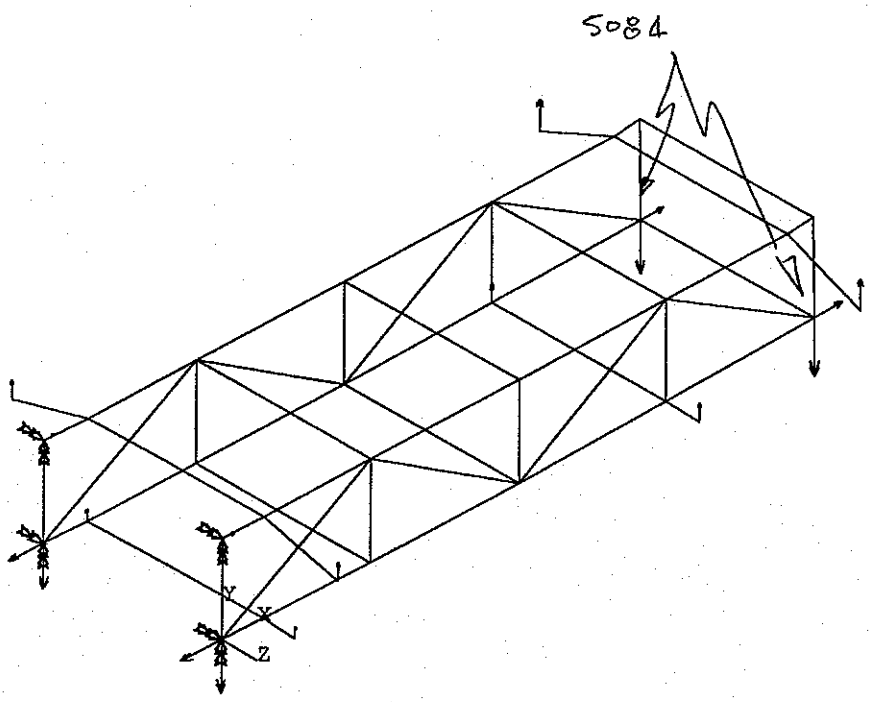


ANSYS 4.4
APR 13 1990
08:47:38
POST1 DISPL.
STEP=1
ITER=1
F GLOBAL
DMX =0.04763
BC SYMBOLS

DSCA=230.462
XV =-1
YV =1
ZV =1
DIST=109.77
XF =91.25
YF =14.313
ZF =-27

.F Horizontal Truss 4-12-90

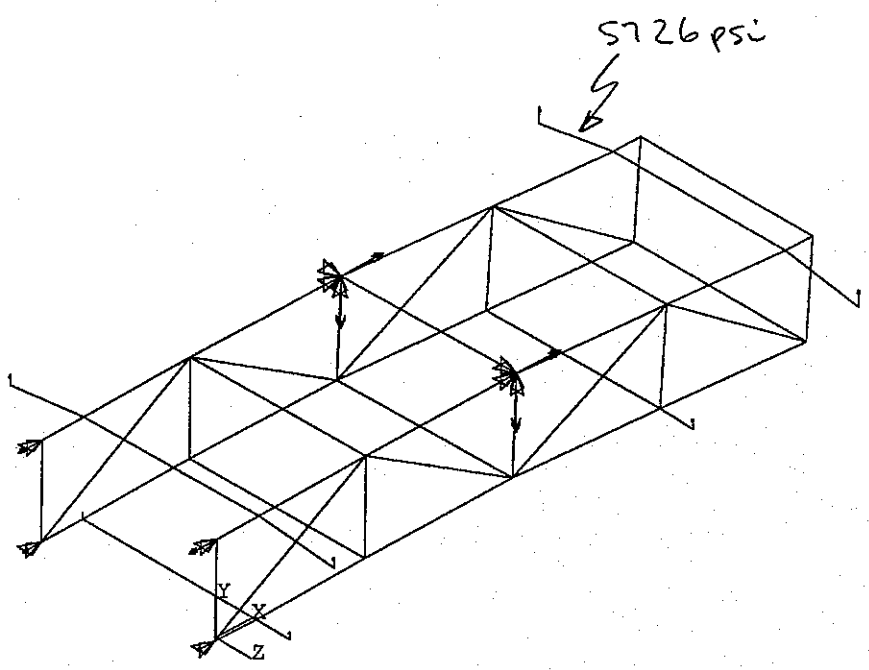


F Horizontal Truss 3-17-90

ANSYS 4.4
MAR 21 1990
13:06:45
POST1 DISPL.
STEP=1
ITER=1
F GLOBAL
DMX =0.056338
BC SYMBOLS

DSCA=194.842
XV =-1
YV =1
ZV =1
DIST=109.77
XF =91.25
YF =14.313
ZF =-27

EF HORIZ TRUSS – PDT SUPPORT

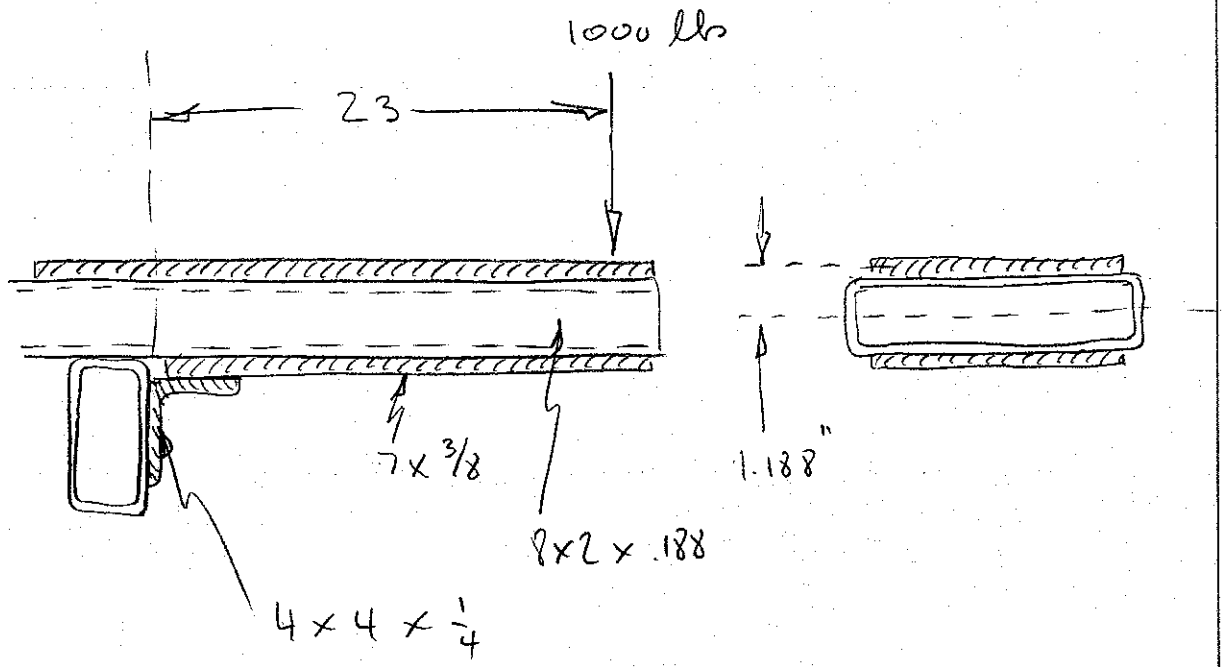


$$I = 2.52 + (2)(7)(.375)(1.188)^2 = \underline{9.93} \text{ in}^4$$

Bending Stress

$$\sigma = \frac{Mc}{I} = \frac{(1000)(23)(1.375)}{9.93} = \underline{3185 \text{ psi}}$$

$$\text{Defl.} = \frac{Pl^3}{3EI} = \frac{(1000)(23)^3}{(3)(30E6)(9.93)} = \underline{.014''}$$

EF - HORIZ TRUSS
OVER HANG DESIGN

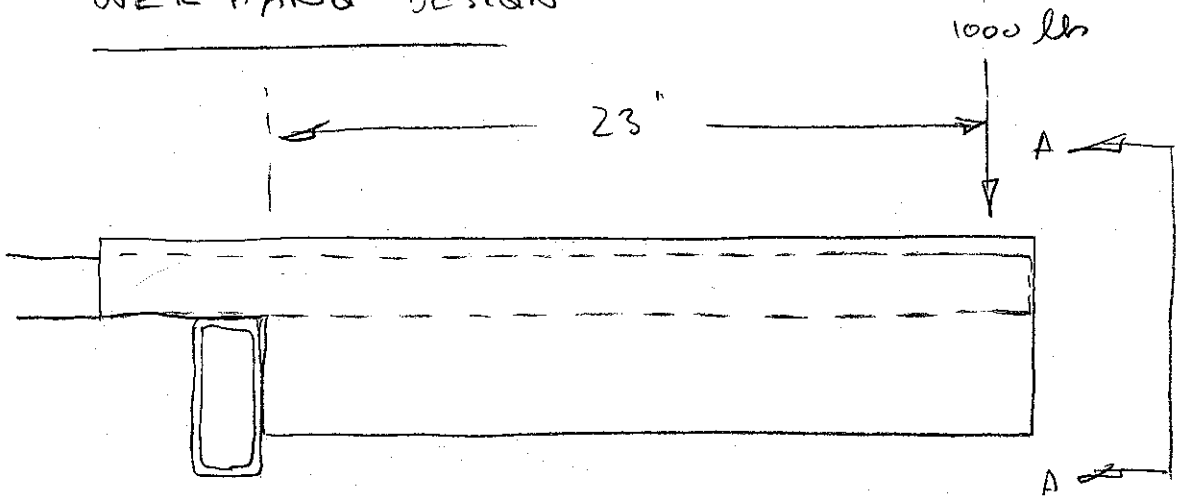


VIEW A-A

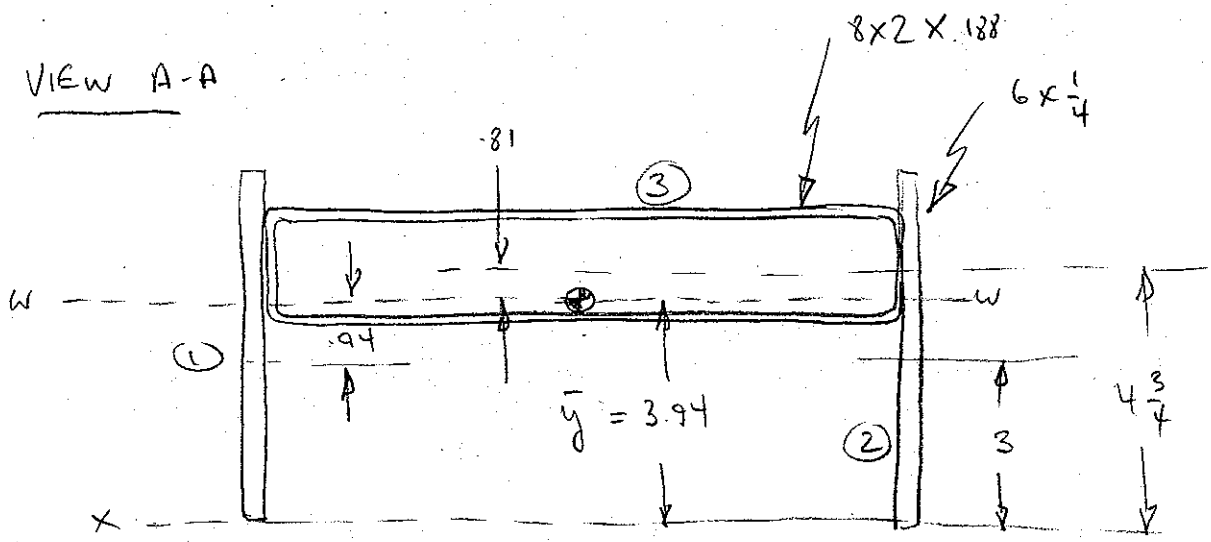


| Item | A | y | Ay | I | D | AD² | $I_{WW}$ |
|---|---|---|---|---|---|---|---|
| 1 | 1.50 | 3 | 4.5 | 4.50 | .94 | 1.33 | 5.83 |
| 2 | 1.50 | 3 | 4.5 | 4.50 | .94 | 1.33 | 5.83 |
| 3 | 3.52 | 4.75 | 16.72 | 2.52 | .81 | 1.65 | 4.17 |
| | 6.52 | | 25.72 | | | | 15.82 |

$$\bar{y} = \frac{25.72}{6.52} = 3.94''$$

$$\sigma = \frac{Mc}{I} = \frac{(1000)(23)(3.94)}{15.82} = 5,726 \text{ psi}$$

$$\text{Deflection} = \frac{Fl^3}{3EI} = \frac{(1000)(23)^3}{(3)(30EG)(15.82)} = .009''$$

# DO SAFETY DESIGN REVIEW
# OF
# EF PDT TRUSSES

May 24, 1990

## ADDENDUM

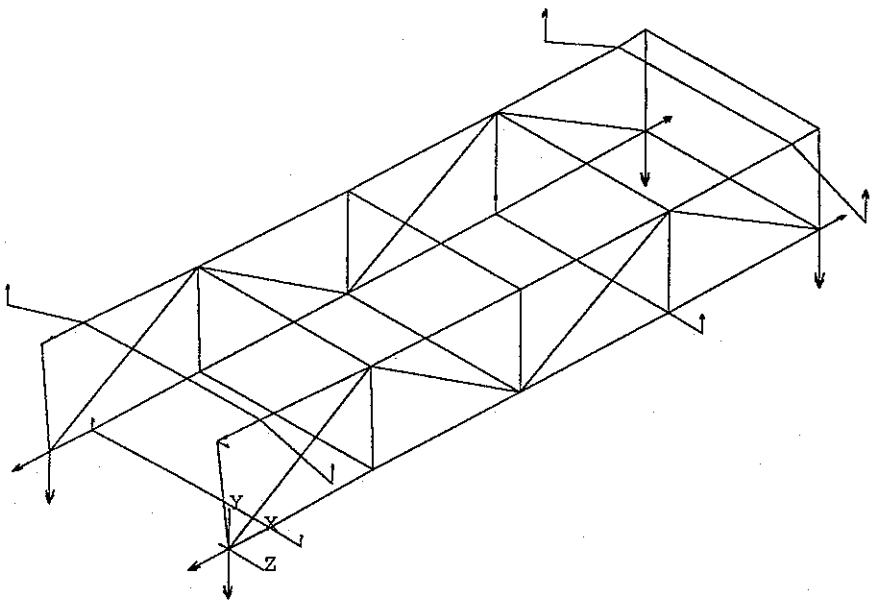


ANSYS 4.4
MAY 23 1990
17:50:18
POST1 DISPL.
STEP=1
ITER=1
F GLOBAL
DMX =0.047558
BC SYMBOLS

DSCA=230.811
XV =-1
YV =1
ZV =1
DIST=109.77
XF =91.25
YF =14.313
ZF =-27

:F Horizontal Truss with horizontal Force 5-23-90

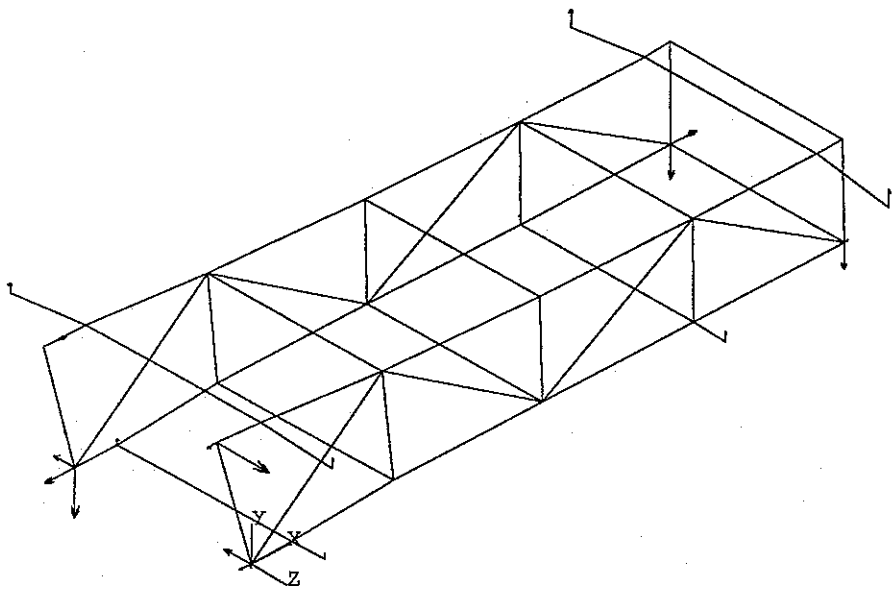


ANSYS 4.4
MAY 23 1990
18:10:27
POST1 DISPL.
STEP=1
ITER=1
F GLOBAL
DMX =0.153505
BC SYMBOLS

DSCA=71.509
XV =-1
YV =1
ZV =1
DIST=109.77
XF =91.25
YF =14.313
ZF =-27

F Horizontal Truss with horizontal Force 5-23-90

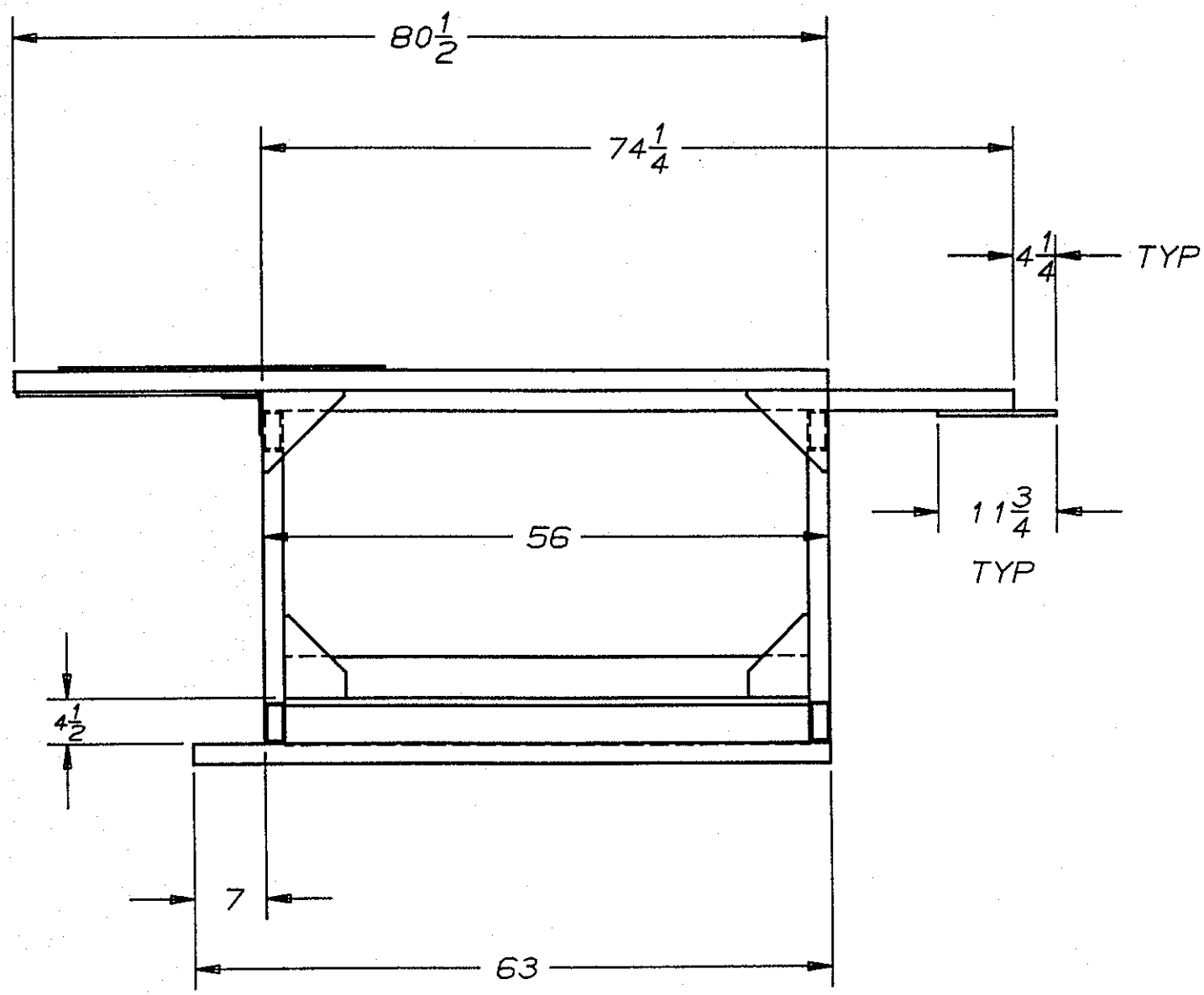
80 1/2
74 1/4
4 1/4
TYP
11 3/4
TYP
56
4 1/2
7
63

Ef Horizontal Truss - PDT support arm

Weld Requirements:

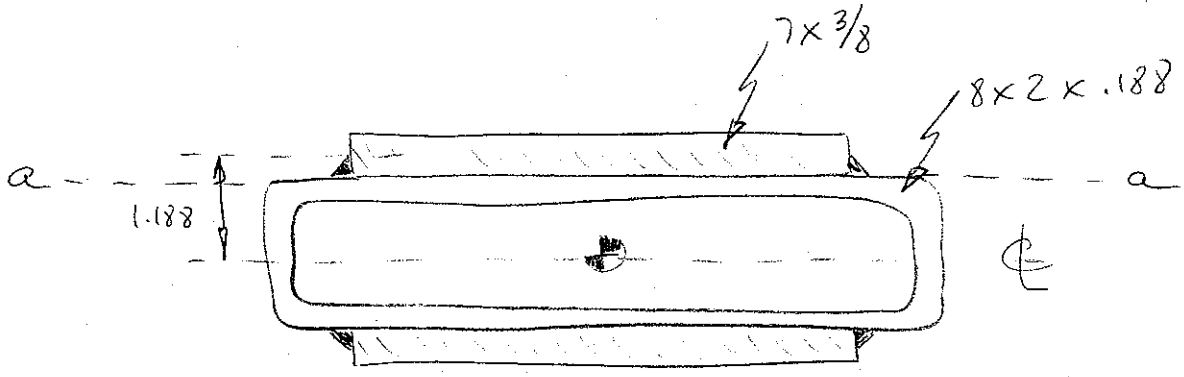


Shear flow $q = \frac{VQ}{I}$

at a-a: $Q = Ad = (7)(.375)(1.188) = \underline{3.12}\ in^3$

$I = \underline{9.93}\ in^4$

$V = \underline{1000}\ lbs$

} From previous calculations

$q = \frac{VQ}{I} = \underline{314\ lbs/inch}$

Since there are 2 welds, $\underline{157}$ lbs/inch

Per 1" of 3/16" weld: $(.707)(.188)(1)(13,600) = \underline{1808}$ lbs/in

$\therefore$ Need $\frac{157}{1808} = 9\%$ weld

For Safety factor of 3, use $\underline{30\%}$ weld

EF Horizontal Truss - PDT Support Arm

Weld Requirements:

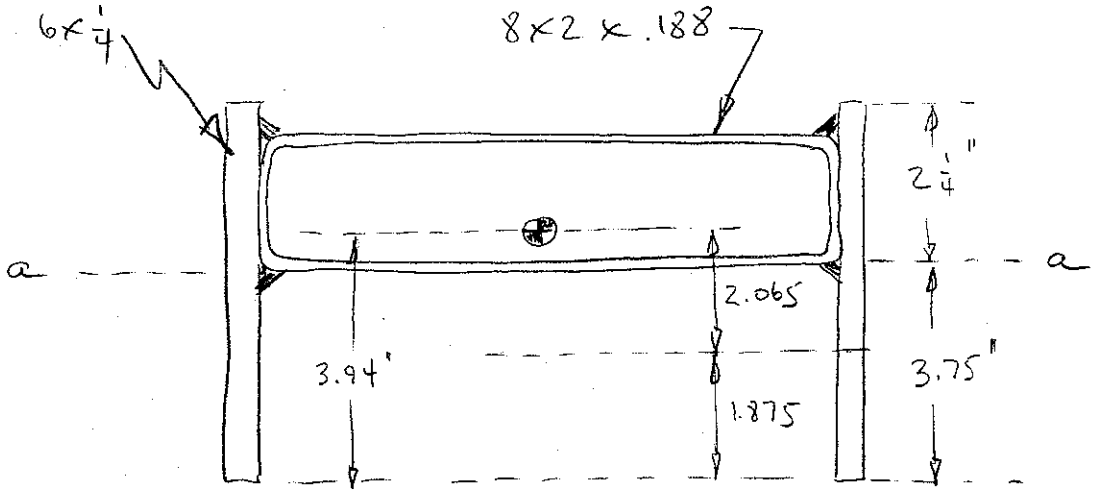


Shear flow $q = \frac{VQ}{I}$

at a-a: $Q = Ad = (6)(.25)(2)(2.065) = \underline{6.195 \text{ in}^3}$

$I = \underline{15.82} \text{ in}^4$

$V = \underline{1000 \text{ lbs}}$

$q = \frac{VQ}{I} = \frac{(1000)(6.195)}{15.82} = \underline{392 \text{ lbs/inch}}$

Since there are 2 welds, $\underline{196 \text{ lbs/inch}}$

Per 1" of 3/16" weld: $(.707)(.188)(1)(13,600) = \underline{1808 \text{ lbs/inch}}$

$\therefore$ Need $\frac{196}{1808} = \underline{11\% \text{ weld}}$

For Safety factor of 3, Use $\underline{33\% \text{ weld}}$

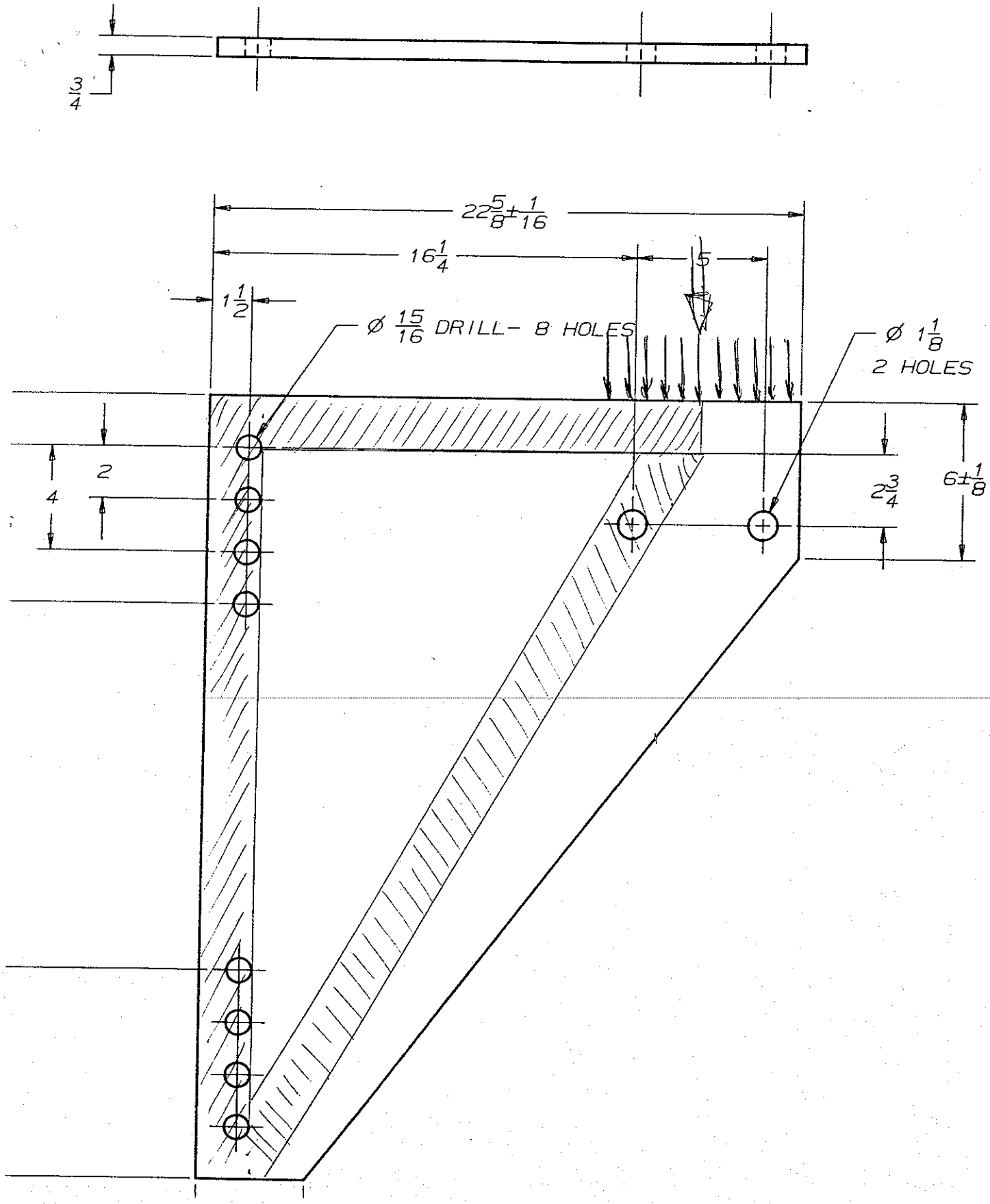
3/4
22 5/8 ± 1/16
16 1/4
5
1 1/2
Ø 15/16 DRILL- 8 HOLES
Ø 1 1/8
2 HOLES
2
4
2 3/4
6 ± 1/8