Fermilab

Particle Physics Division

Mechanical Department Engineering Note

Number: MD-ENG-528 Date: August 21, 2014

Project: Minerva

Project Internal Reference:

Title: Minerva replacement test beam detector stand

Author(s): Jim Kilmer

Reviewer(s): Jay W Hall 11/6/2014

Key Words:

Abstract/Summary:

Applicable Codes:

AISC Manual of Steel Construction, Ninth Edition, 1989.

Engineering Note for Minerva Test Beam Detector 2
Jim Kilmer
August 6, 2014

This note describes the structural calculations for a new Minerva Test Beam Detector support. The first support was accidentally scrapped. It is the pattern for the new support. The new support is built from parts used to build one of the Minerva Production support stands. Four columns and the upper detector rails are reused. The production support stand engineering note is MD-ENG-148. The first test beam stand had an engineering note number MD-ENG-141.

The new support reuses four columns made from W8 by 35 wide flange beams. The main hanging rails are resued and made from W8 by 67 wide flange beams welded to solid 4" by 4" bars for a bearing rails. The new stand is shown on drawing F10026655 and associated details.

COLUMNS

When the first stand was constructed Robert Flight from University of Rochester had a solid model of the test beam apparatus and gave us a total loading of 28 kips uniformly loaded on the two main rails along about 78 inches of the total span.

Columns are 128" tall so use 11 foot.

$K := 1$ $\quad L := 11 \cdot ft$ $\quad K \cdot L = 11 \cdot ft$

From page 3-31 of the AISC code for a KL of 11 the allowable axial load is 174 kips. The cross-sectional area of the column is 10.3 inches squared

$$F_a := \frac{174000 lbf}{10.3 \cdot in^2} = 1.689 \times 10^4 \cdot psi$$

allowable stress using this column

Load equally shared by each column.

$$f_a := \frac{7000 lbf}{10.3 in^2} = 679.612 \cdot psi$$

Since fa is less than Fa the columns are OK in compression. However the load is carried eccentrically by the beam. It is carried by the horizontal beams to the flange of the columns. For the W8 by 35 beam Sx = 31.2 inches cubed.

$$M_x := 7000 \cdot lbf \cdot 4 \cdot in = 2.8 \times 10^4 \cdot lbf \cdot in$$

$$S_x := 31.2 \cdot in^3$$

$$F_y := 36000 \cdot psi$$

$f_{bx} := \frac{M_x}{S_x} = 897.436 \cdot psi$ $\qquad$ $F_{bx} := 0.6 \cdot F_y = 2.16 \times 10^4 \cdot psi$

$f_{by} := 0$ $\qquad$ No weak axis bending

Combine stresses

$\frac{f_a}{F_a} + \frac{f_{bx}}{F_{bx}} + \frac{f_{by}}{F_{bx}} = 0.082$ $\qquad$ Since this is less than 1 the columns are OK for total stress.

MAIN HORIZONTAL BEAMS

The main beams are made from W8 by 67 wide flange beams with a solid 4 inch square bar welded to the flange forming a guide rail for the planes. For this calculation ignore the bar. Use case 4 from the AISC code, Ninth edition, page 2-297 assuming free ends.

$l := 128 \cdot in$ $\qquad$ $b := 78 \cdot in$ $\qquad$ $a := \frac{128 - 78}{2} \cdot in$ $\qquad$ $c := a$

$w := \frac{28000 \cdot lbf}{2 \cdot 78 \cdot in} = 179.487 \cdot \frac{lbf}{in}$

Because the load is centered on the beam and eqally shared by each side

$R1 := \frac{28000 lbf}{4} = 7 \times 10^3 \cdot lbf$ $\qquad$ $R2 := R1$

$Mmax := R1 \cdot \left(a + \frac{R1}{2 \cdot w} \right) = 3.115 \times 10^5 \cdot lbf \cdot in$

$S_{67} := 60.4 \cdot in^3$ $\qquad$ For a W8 by 67 Ibeam

$f_b := \frac{Mmax}{S_{67}} = 5.157 \times 10^3 \cdot psi$

$F_b := .6 \cdot 36000 \cdot psi = 2.16 \times 10^4 \cdot psi$ $\qquad$ Allowable bending stress

Shear in the beam

$\sigma shear := \frac{R1}{19.7 \cdot in^2} = 355.33 \cdot psi$

Allowable shear is .4*36,000 psi = 14,400 psi

Since bending stress and shear stress is much less than the allowables above the Ibeam size is fine.

CONNECTIONS BETWEEN COLUMNS AND MAIN HORIZONTAL BEAMS

The beams are bolted to the columns using 1" thick web stiffener plates welded between the flanges on the W8 by 67 Ibeams. The plates are on both sides of the web and are drilled for four 3/4 inch bolts. Calculate the shear force on the bolts.

$Wt_{Ibeam} := 67 \cdot \frac{lbf}{ft} \cdot 128 \cdot in = 714.667 \cdot lbf$ Weight of Ibeam

$Wt_{bar} := 4 \cdot in \cdot 4 \cdot in \cdot 128 \cdot in \cdot .290 \cdot \frac{lbf}{in^3} = 593.92 \cdot lbf$ Weight of 4X4 bar

$Wt_{total} := Wt_{Ibeam} + Wt_{bar} + 7000 \cdot lbf = 8.309 \times 10^3 \cdot lbf$

$\frac{Wt_{total}}{4} = 2.077 \times 10^3 \cdot lbf$ Total load in shear on each bolt

Assume A307 bolts or grade 2. Then from TABLE I-D, page 4-5 of the AISC, the allowable load per bolt is 4400 lbf which is greater than the actual loading of 2077 lbf per bolt. From page 4-51 TABLE IX The total capacity of a two bolt vertical line on each side of the web of 3/4 inch bolts has a maximum total capacity of the joint of 17.7 kips, which is greater than the actual load of 8309 pounds on each connection. Therefore the bolted connections to the column are fine.

The welds on the plates are 1/2 inch welds. The welds go around the entire plate but use only the straight section of the web.

$T := 6.125 \cdot in$ Straight length of web

$t_w := \frac{0.5 \cdot in}{\sqrt{2}} = 0.354 \cdot in$ Throat of weld

$A_w := T \cdot t_w = 2.166 \cdot in^2$

$\sigma_w := \frac{Wt_{total}}{2A_w} = 1.918 \times 10^3 \cdot psi$ Shear stress on weld on plate on each side of web

This stress is well below the limits of a weld using E70 rod.

SEISMIC LOADING

The frame is not moved so there is only a seismic lateral load on the frame. Use 5% for the loading for this region.

$$Wtdetector := 28 \cdot kip$$

$$Wtframe := 5652 lbf$$

$$F_{seis} := 0.05 \cdot (Wtdetector + Wtframe) = 1.683 \times 10^{3} \cdot lbf$$

Check the lateral load perpendicular to the beam direction across the front of the frame. Assume the load is at the beam height which shoould be the center of mass of the detector.

$$M := F_{seis} \cdot 67.125 in = 1.129 \times 10^{5} \cdot lbf \cdot in$$

The lower cross members are W12 by 19 Ibeams with an Ixx of 130 in^4.

$$\sigma := \frac{M \cdot 6 \cdot in}{130 \cdot in^{4}} = 5.213 \times 10^{3} \cdot psi$$

These lower cross members are able to resist the bending from the seismic load. Note that the same result is calcuclated for the seismic force being applied in the direction of the beam as teh same lower corss members are used in both directions.

MOMENT CONNECTIONS OF W12 BY 19 TO W8 BY 67

The flange has two bolts 3/4" in diameter on each end of the flange.This same flange and bol arrangement is used on both ends of all of the W12 by 19 braces. Use the same method shown on page 4-116 for a four tension bolt end plate design.

$$F_f := \frac{M}{12 \cdot in} = 9.412 \times 10^{3} \cdot lbf$$ Force on the flange from the above moment

$$T := \frac{F_f}{2} = 4.706 \times 10^{3} \cdot lbf$$ Force on each bolt in tension

Since the bolts are 3/4 inch diameter and are minimum A307 bolts the have by TABLE 1-A, page 4-3 of the AISC an allowable tension load of 8.8 kips which is greater than the bolt tension calculated above the bolts are adequate.

$P_f := 1.92 \cdot in$ $\qquad$ $b_p := 6 \cdot in$

$M_e := T \cdot \frac{P_f}{2} = 4.518 \times 10^3 \cdot lbf \cdot in$ $\qquad$ End Plate Moment

$t_p := \sqrt{\frac{6 \cdot M_e}{27000 \cdot psi \cdot b_p}} = 0.409 \cdot in$ $\qquad$ Required thickness of flange plate

Use a 1/2 inch thick plate for flange.

Note also that these bolts have only a minimal shear load, basically the weight of the W12 by 19 Ibeam itself, or about 201 pounds spread over four 3/4 inch bolts.

PHOTOTUBE SUPPORT CROSS MEMBERS

There are two support members for the phototube racks that are angle iron 6" by 6" by 1/2" thick. They have 1/2" thick flanges welded on the end with four 3/4 " bolts. Each rack holds forty phototube boxes weighing an estimated 15 pounds each and the aluminum rack is about 100 pounds.

$PMT_{wt} := 40 \cdot 15 \cdot lbf + 100 \cdot lbf = 700 \cdot lbf$

This weight is distributed along nearly the entire lenght of the rack or about 92 inches. Use case 4 page 2-297 for the beam.

$b := 92 \cdot in$ $\qquad$ $a := \frac{128 \cdot in - 92 \cdot in}{2} = 18 \cdot in$ $\qquad$ $c := a$ $\qquad$ $l := 128 \cdot in$

$w := \frac{PMT_{wt}}{b} = 7.609 \cdot \frac{lbf}{in}$

$R1 := w \cdot \frac{b}{2 \cdot l} \cdot (2 \cdot c + b) = 350 \cdot lbf$ $\qquad$ Also R1=R2

$M_{max} := R1 \cdot \left(a + \frac{R1}{2 \cdot w}\right) = 1.435 \times 10^4 \cdot lbf \cdot in$

$S := 4.61 \cdot in^3$ $\qquad$ S for a 6 inch by 6 inch by 1/2 inch angle

$f_b := \frac{M_{max}}{S} = 3.113 \times 10^3 \cdot psi$

The angle is OK for bending as the stress is less than Fb calculated above.

$$Total_{wt} := 19.6 \cdot \frac{lbf}{ft} \cdot 10.6 \cdot ft + PMT_{wt} = 907.76 \cdot lbf$$

Shear on the bolts is shared by four bolts on each end

$$\frac{Total_{wt}}{8} = 113.47 \cdot lbf$$

The bolts are 3/4 inch A307 bolts and for single shear have an allowable load of 4.4 kips. Therefore these bolts are fine for this small shear load.

DESCRIPTION: F10026655
CATEGORY: ASSEMBLY PROJECT: MINERVA

REV	REVISION CONTROL DOCUMENT	DATES	SIGNATURES
-	F10026655---RCD		DRAWN
			APPROVED

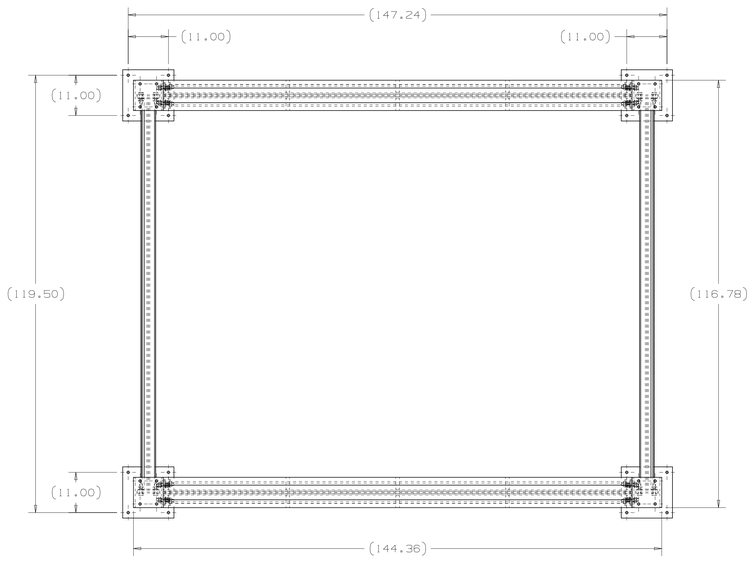

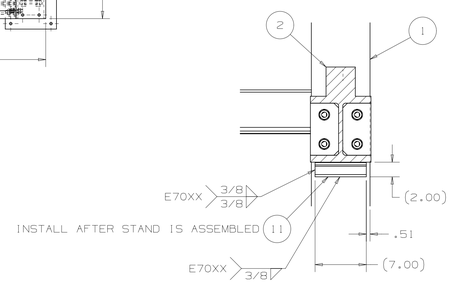

SECTION A-A
4X

SCALE: 1:8

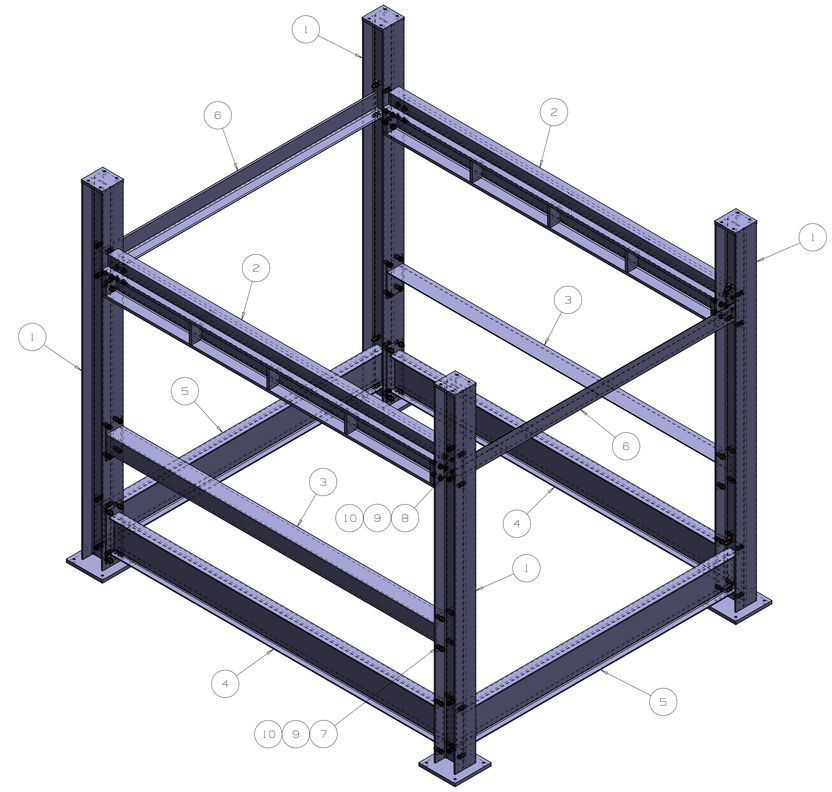

ISOMETRIC VIEW

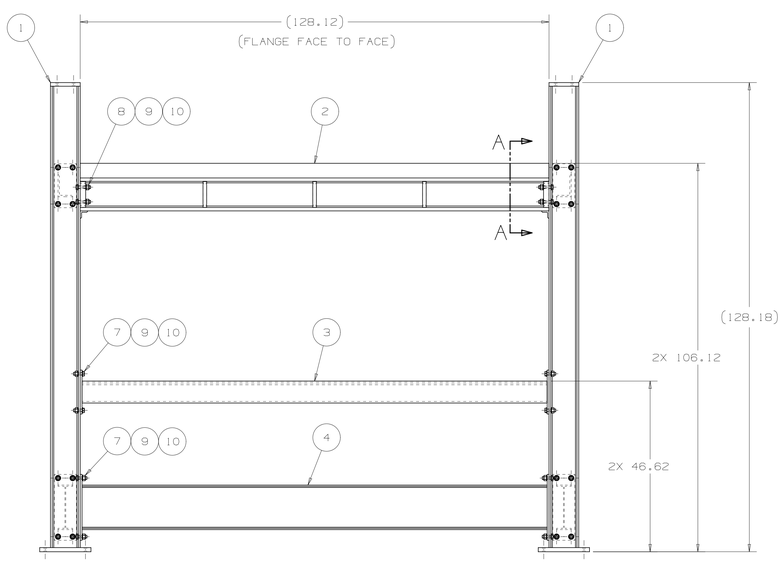

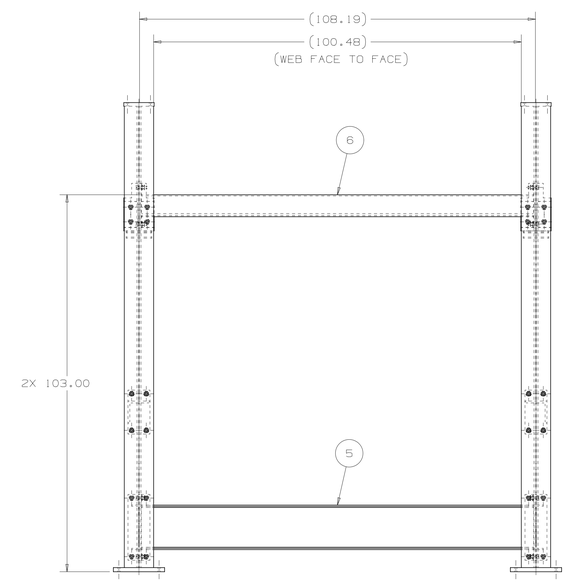

ITEM	PART NO.	DESCRIPTION	QTY.
11	COML.	ANGLE, 2 X 2 X 3/8 X 7.00 LG. CARBON STEEL A36	4
10	COML.	STD. WASHER, 3/4 NOMINAL CARBON STEEL	160
9	COML.	HEAVY HEX NUT, 3/4-10 CARBON STEEL	80
8	COML.	HHCS, 3/4-10 X 3.50 LG., CARBON STEEL, GRADE 8	16
7	COML.	HHCS, 3/4-10 X 2.50 LG., CARBON STEEL, GRADE 5	64
6	F10026578	WELDMENT, CROSS MEMBER, 6 X 4	2
5	F10026582	WELDMENT, CROSS MEMBER, 108.19	2
4	F10026532	WELDMENT, CROSS MEMBER, 128.12	2
3	F10026538	WELDMENT,CROSS MEMBER, 6 X 6	2
2	F10026620	CROSS MEMBER EXISTING REFERENCE DWG. MD-444205	2
1	F10026601	COLUMN, EXISTING	4

PARTS LIST

UNLESS OTHERWISE SPECIFIED

±.X	±.XX	±.XXX	±X/X	±X°
.1	.06	.005	1/16	1°

BREAK ALL SHARP EDGES .015 MAX.
DO NOT SCALE DRAWING
DIMENSIONS BASED ON ASME Y14.5M-1994
MAX. ALL MACH SURFACES 125
DRAWING UNITS: INCHES

DRAWN	B.CYKO	DATE	05-Aug-2014
CHECKED		DATE	
APPROVED		DATE	
USED ON			
MATERIAL	SEE PARTS LIST		
GROUP: Particle Physics Mechanical Support		CAGE CODE: 0U5R6	

FERMI NATIONAL ACCELERATOR LABORATORY
UNITED STATES DEPARTMENT OF ENERGY

NAME: TEST BEAM DETECTOR STAND ASSY.

SCALE	SIZE	DRAWING NUMBER	SHEET	REV
1:16	E	F10026655	1 or 1	-

DESCRIPTION: F10026582
CATEGORY: WELDMENT
PROJECT: MINERVA

REV	REVISION CONTROL DOCUMENT	DATES	SIGNATURES	
-	F10026582---RCD		DRAWN	
			APPROVED	

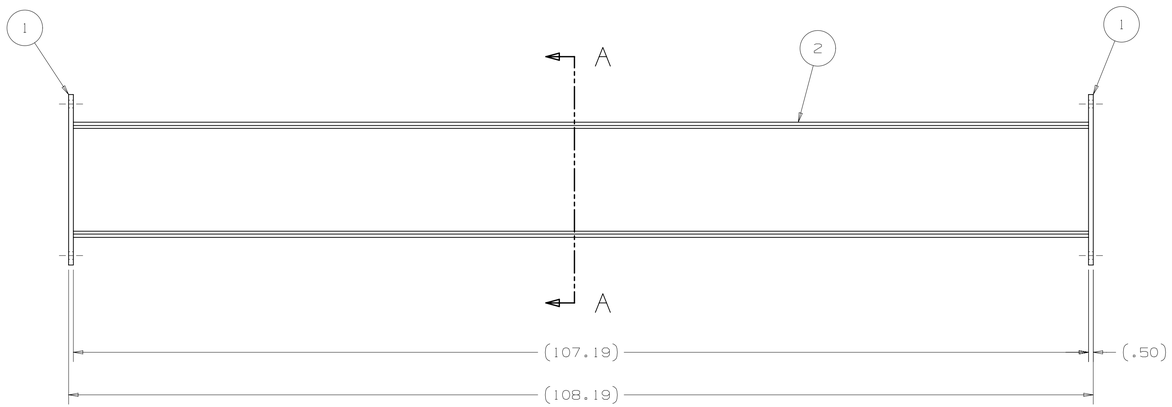

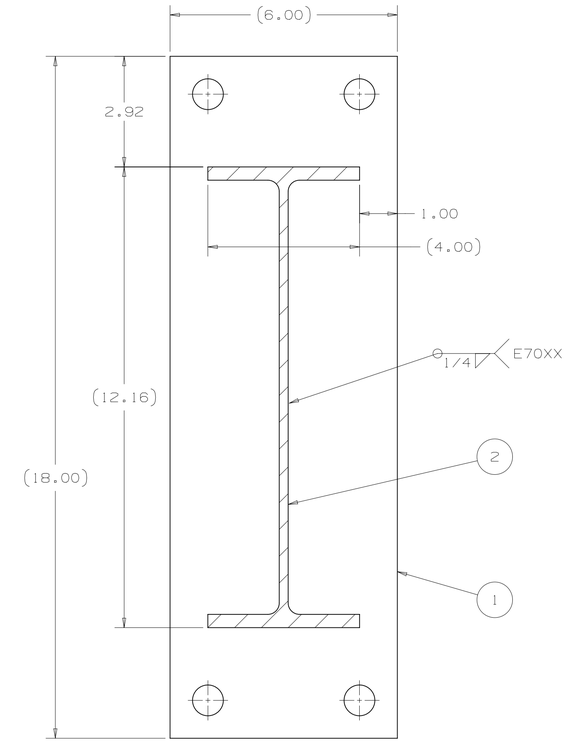

SECTION A-A
2X

SCALE: 1:2

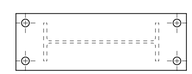

ITEM	PART NO.	DESCRIPTION	QTY.
2	COML.	BEAM, W12 X 19.0# X 107.19 LG., CARBON STEEL A36	1
1	F10026526	PLATE, CROSS MEMBER	2

PARTS LIST

UNLESS OTHERWISE SPECIFIED

±.X	±.XX	±.XXX	±X/X	±X°
.1	.03	.005	1/16	1°

BREAK ALL SHARP EDGES .015 MAX.
DO NOT SCALE DRAWING
DIMENSIONS BASED ON ASME Y14.5M-1994
MAX. ALL MACH SURFACES 125
DRAWING UNITS: INCHES

DRAWN	B.CYKO	DATE	06-Aug-2014
CHECKED		DATE	
APPROVED		DATE	
USED ON	F10026655		
MATERIAL	SEE PARTS LIST		
GROUP: Particle Physics Mechanical Support		CAGE CODE: 0U5R6	

FERMI NATIONAL ACCELERATOR LABORATORY
UNITED STATES DEPARTMENT OF ENERGY

NAME
WELDMENT, CROSS MEMBER, 108.19

SCALE	SIZE	DRAWING NUMBER	SHEET	REV
1:8	D	F10026582	1 OF 1	-

DESCRIPTION: F10026578
CATEGORY: WELDMENT
PROJECT: MINERVA

REV	REVISION CONTROL DOCUMENT	DATES	SIGNATURES	
-	F10026578---RCD		DRAWN	
			APPROVED	

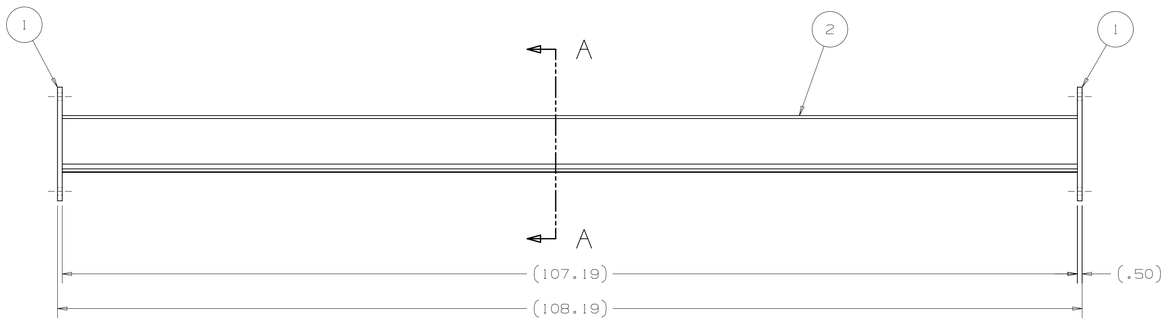

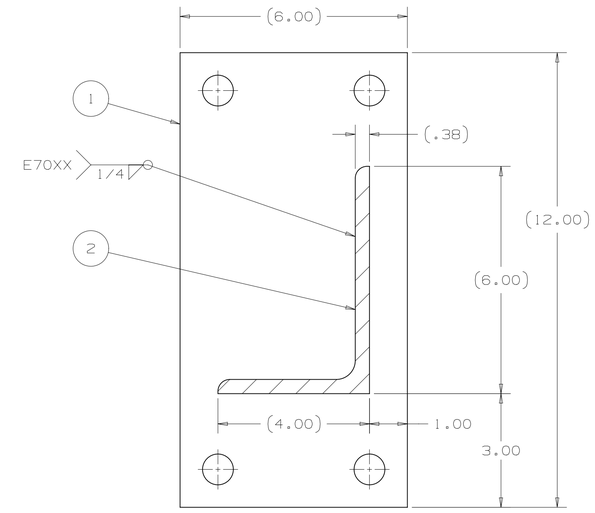

SECTION A-A
2X

SCALE: 1:2

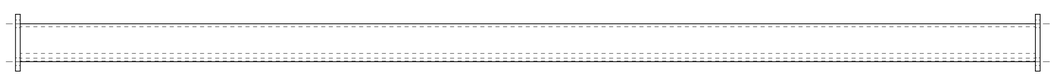

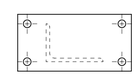

ITEM	PART NO.	DESCRIPTION	QTY.
2	COML.	ANGLE, 6 X 4 X 3/8 X 107.19 LG., CARBON STEEL A36	1
1	F10026529	PLATE, CROSS MEMBER	2

PARTS LIST

UNLESS OTHERWISE SPECIFIED				
±.X	±.XX	±.XXX	±X/X	±X°
.1	.03	.005	1/16	1°

BREAK ALL SHARP EDGES .015 MAX.
DO NOT SCALE DRAWING
DIMENSIONS BASED ON ASME Y14.5M-1994
MAX. ALL MACH SURFACES 125
DRAWING UNITS: INCHES

DRAWN	B.CYKO	DATE	06-Aug-2014
CHECKED		DATE	
APPROVED		DATE	
USED ON	F10026655		
MATERIAL	SEE PARTS LIST		
GROUP: Particle Physics Mechanical Support		CAGE CODE: 0U5R6	

FERMI NATIONAL ACCELERATOR LABORATORY
UNITED STATES DEPARTMENT OF ENERGY

NAME
WELDMENT, CROSS MEMBER, 6 X 4

SCALE	SIZE	DRAWING NUMBER	SHEET	REV
1:8	D	F10026578	1 OF 1	-

DESCRIPTION: F10026601
CATEGORY: WELDMENT PROJECT: MINERVA

REV	REVISION CONTROL DOCUMENT	DATES	SIGNATURES	
-	F10026601---RCD		DRAWN	
			APPROVED	

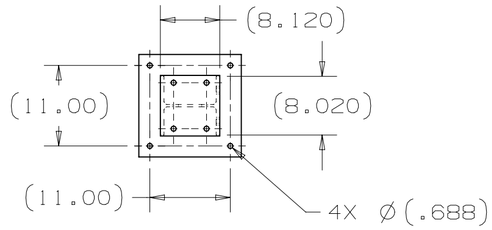

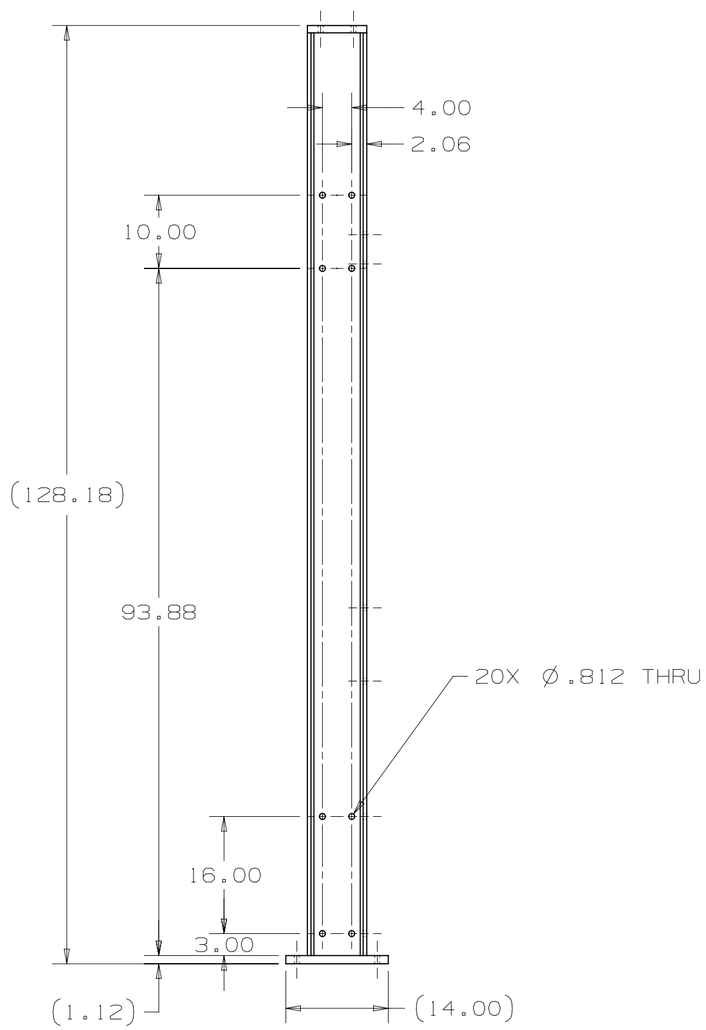

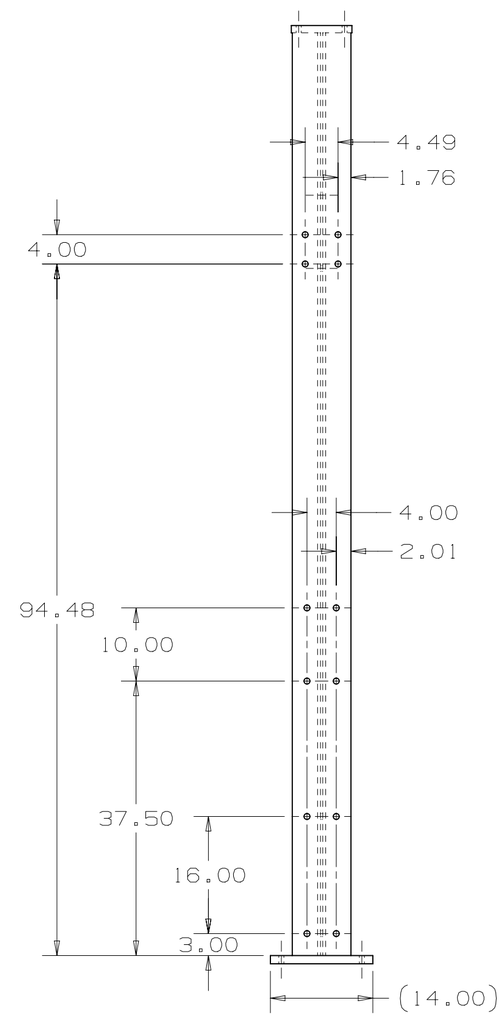

UNLESS OTHERWISE SPECIFIED				
±.X	±.XX	±.XXX	±X/X	±X°
.1	.03	.005	1/16	1°

BREAK ALL SHARP EDGES .015 MAX.
DO NOT SCALE DRAWING
DIMENSIONS BASED ON ASME Y14.5M-1994
MAX. ALL MACH SURFACES 125
DRAWING UNITS: INCHES

DRAWN	B.CYKO	DATE	05-Aug-2014
CHECKED		DATE	
APPROVED		DATE	

USED ON
F10026655

MATERIAL
MAKE FROM EXISTING COLUMN WELDMENT

GROUP: Particle Physics Mechanical Support | CAGE CODE: 0U5R6

FERMI NATIONAL ACCELERATOR LABORATORY
UNITED STATES DEPARTMENT OF ENERGY

NAME
COLUMN, EXISTING, MODIFIED

SCALE	SIZE	DRAWING NUMBER	SHEET	REV
1:16	C	F10026601	1 OF 1	-

DESCRIPTION: F10026538
CATEGORY: WELDMENT
PROJECT: MINERVA

REV	REVISION CONTROL DOCUMENT	DATES	SIGNATURES	
-	F10026538---RCD		DRAWN	
			APPROVED	

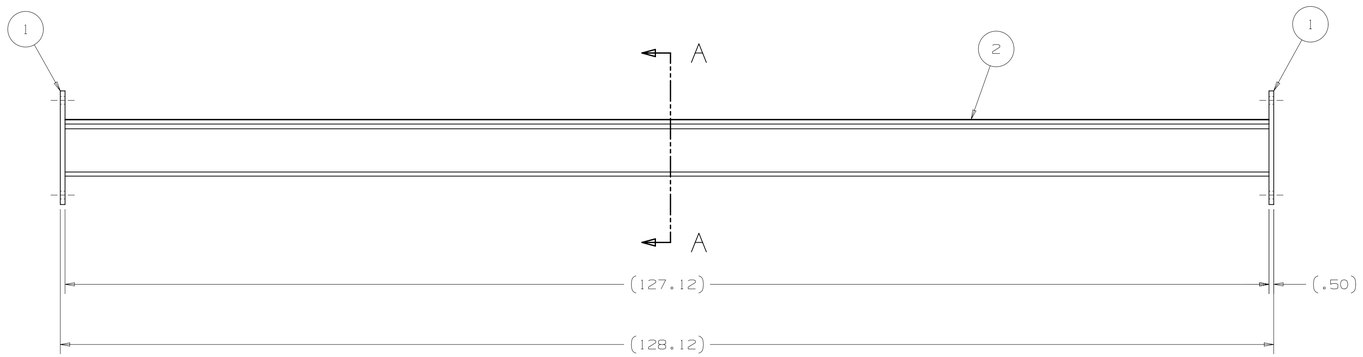

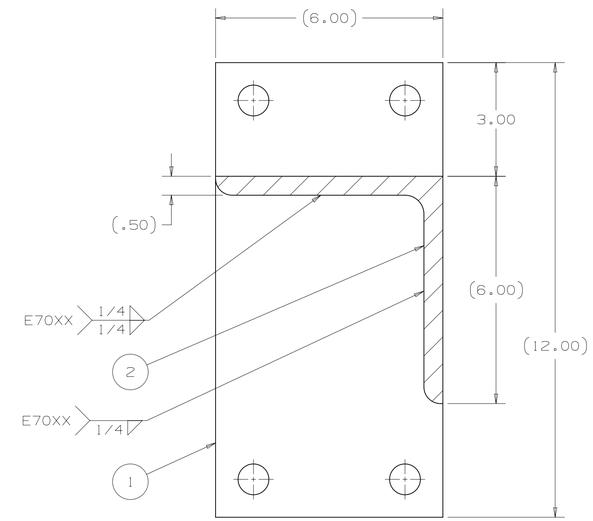

SECTION A-A
2X

SCALE: 1:2

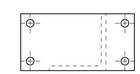

ITEM	PART NO.	DESCRIPTION	QTY.
2	COML.	ANGLE, 6 X 6 X 1/2 X 127.19 LG., CARBON STEEL A36	1
1	F10026529	PLATE, CROSS MEMBER	2

PARTS LIST

UNLESS OTHERWISE SPECIFIED				
±.X	±.XX	±.XXX	±X/X	±X°
.1	.03	.005	1/16	1°

BREAK ALL SHARP EDGES .015 MAX.
DO NOT SCALE DRAWING
DIMENSIONS BASED ON ASME Y14.5M-1994
MAX. ALL MACH SURFACES 125
DRAWING UNITS: INCHES

DRAWN	B.CYKO	DATE	05-Aug-2014
CHECKED		DATE	
APPROVED		DATE	
USED ON	F10026655		
MATERIAL	SEE PARTS LIST		
GROUP: Particle Physics Mechanical Support		CAGE CODE: 0U5R6	

FERMI NATIONAL ACCELERATOR LABORATORY
UNITED STATES DEPARTMENT OF ENERGY

NAME
WELDMENT, CROSS MEMBER, 6 X 6

SCALE	SIZE	DRAWING NUMBER	SHEET	REV
1:8	D	F10026538	1 OF 1	-

DESCRIPTION: F10026532
CATEGORY: WELDMENT
PROJECT: MINERVA

REV	REVISION CONTROL DOCUMENT	DATES	SIGNATURES	
-	F10026532---RCD		DRAWN	
			APPROVED	

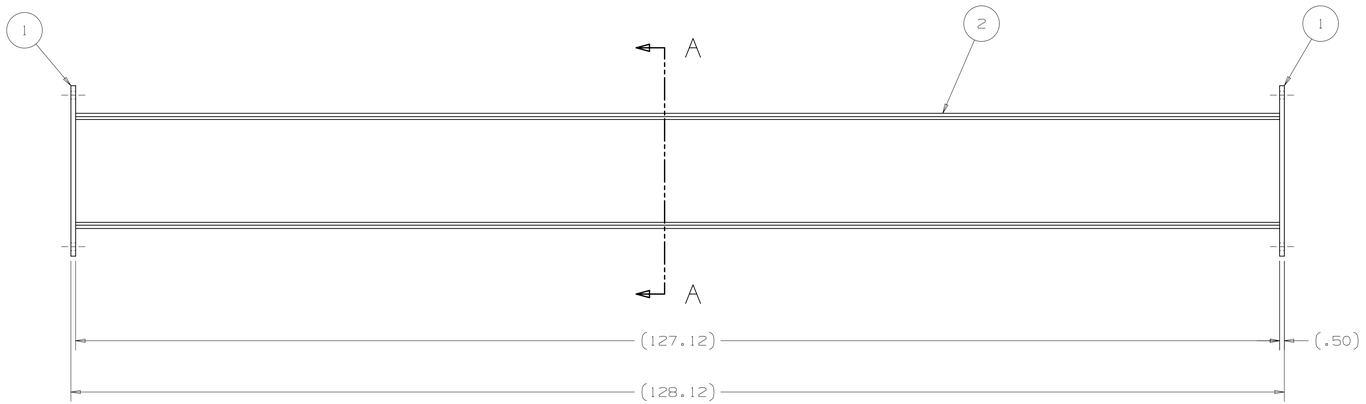

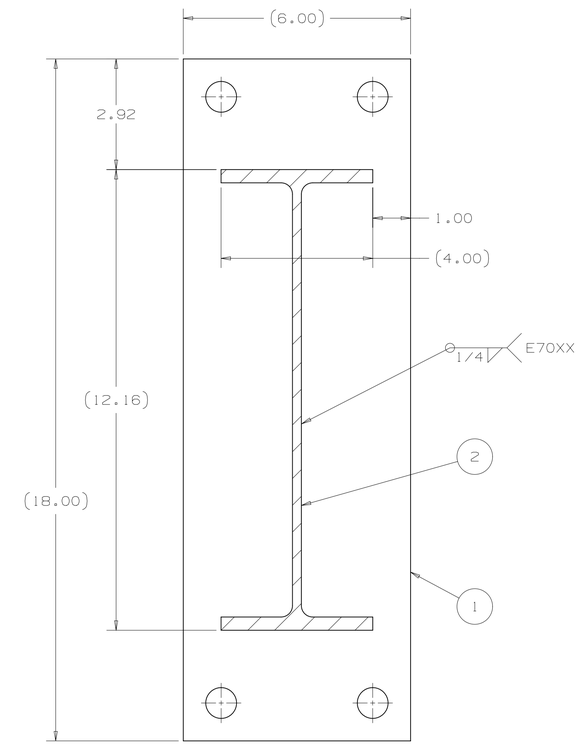

SECTION A-A
2X

SCALE: 1:2

ITEM	PART NO.	DESCRIPTION	QTY.
2	COML.	BEAM, W12 X 19.0# X 127.12 LG., CARBON STEEL A36	1
1	F10026526	PLATE, CROSS MEMBER	2

PARTS LIST

UNLESS OTHERWISE SPECIFIED				
±.X	±.XX	±.XXX	±X/X	±X°
.1	.03	.005	1/16	1°

BREAK ALL SHARP EDGES .015 MAX.
DO NOT SCALE DRAWING
DIMENSIONS BASED ON ASME Y14.5M-1994
MAX. ALL MACH SURFACES 125
DRAWING UNITS: INCHES

DRAWN	B.CYKO	DATE	06-Aug-2014
CHECKED		DATE	
APPROVED		DATE	
USED ON	F10026655		
MATERIAL	SEE PARTS LIST		
GROUP: Particle Physics Mechanical Support		CAGE CODE: 0U5R6	

FERMI NATIONAL ACCELERATOR LABORATORY
UNITED STATES DEPARTMENT OF ENERGY

NAME
WELDMENT, CROSS MEMBER, 128.12

SCALE	SIZE	DRAWING NUMBER	SHEET	REV
1:8	D	F10026532	1 OF 1	-

DESCRIPTION: F10026529
CATEGORY: PLATE PROJECT: MINERVA

REV	REVISION CONTROL DOCUMENT	DATES	SIGNATURES	
-	F10026529---RCD		DRAWN	
			APPROVED	

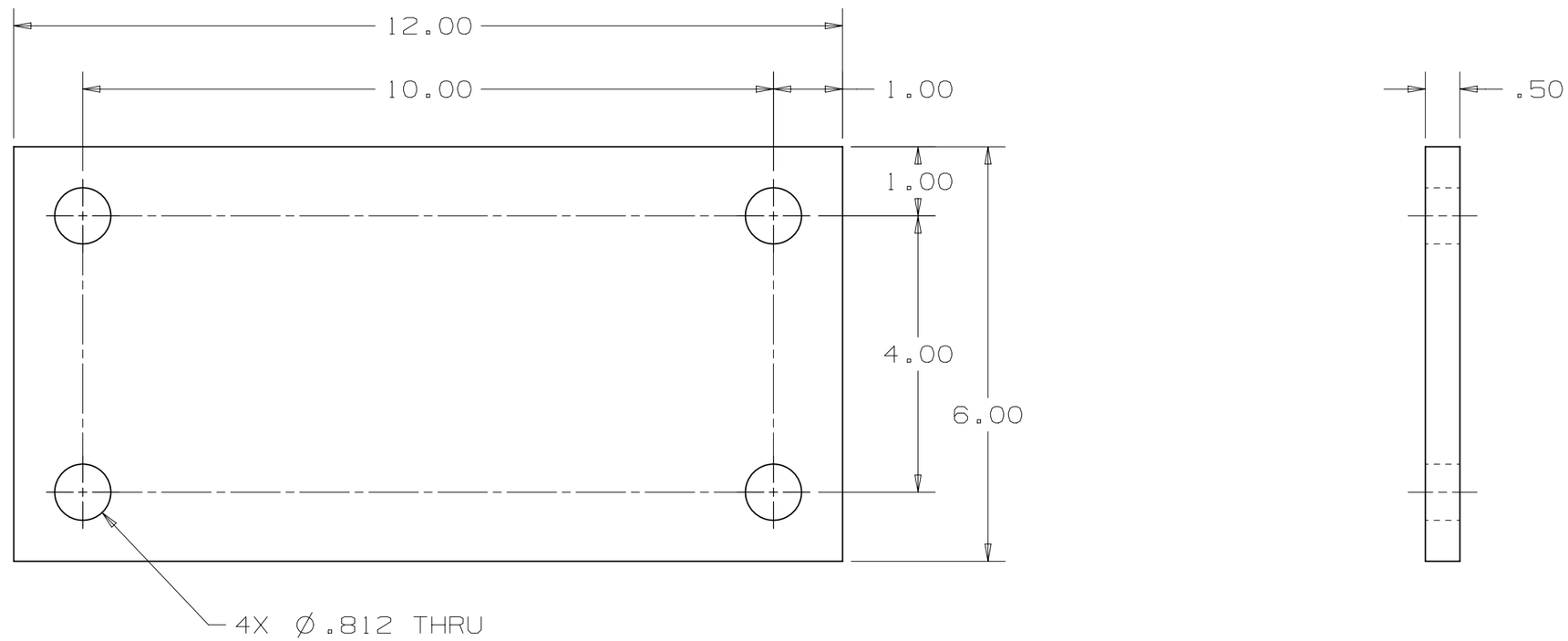

UNLESS OTHERWISE SPECIFIED				
±.X	±.XX	±.XXX	±X/X	±X°
.1	.02	.005	1/16	1°

BREAK ALL SHARP EDGES .015 MAX.
DO NOT SCALE DRAWING
DIMENSIONS BASED ON ASME Y14.5M-1994
MAX. ALL MACH SURFACES 125
DRAWING UNITS: INCHES

DRAWN	B.CYKO	DATE	05-Aug-2014
CHECKED		DATE	
APPROVED		DATE	

USED ON
F10026538 & F10026578

MATERIAL
CARBON STEEL A36

GROUP: Particle Physics Mechanical Support | CAGE CODE: 0U5R6

FERMI NATIONAL ACCELERATOR LABORATORY
UNITED STATES DEPARTMENT OF ENERGY

NAME
PLATE, CROSS MEMBER

SCALE	SIZE	DRAWING NUMBER	SHEET	REV
1:2	B	F10026529	1 OF 1	-

DESCRIPTION: F10026526
CATEGORY: PLATE PROJECT: MINERVA

REV	REVISION CONTROL DOCUMENT	DATES	SIGNATURES	
-	F10026526---RCD		DRAWN	
			APPROVED	

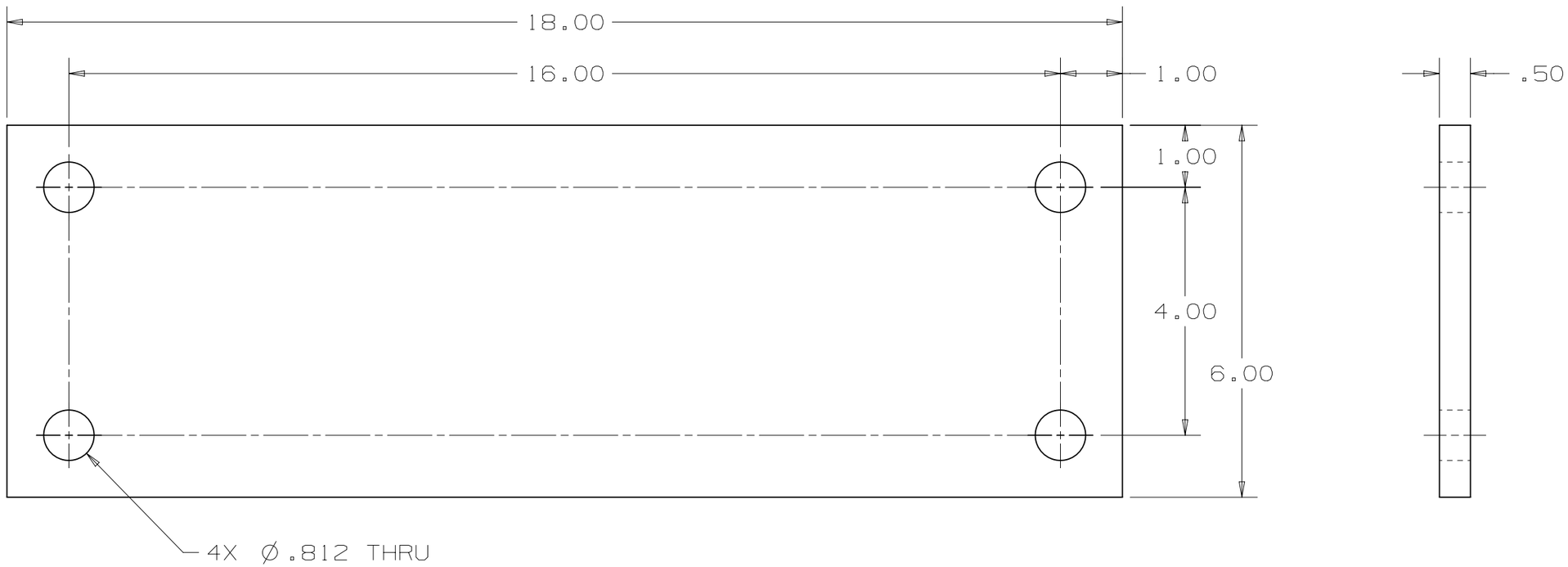

UNLESS OTHERWISE SPECIFIED				
±.X	±.XX	±.XXX	±X/X	±X°
.1	.02	.005	1/16	1°

BREAK ALL SHARP EDGES .015 MAX.
DO NOT SCALE DRAWING
DIMENSIONS BASED ON ASME Y14.5M-1994
MAX. ALL MACH SURFACES 125
DRAWING UNITS: INCHES

DRAWN	B.CYKO	DATE	06-Aug-2014
CHECKED		DATE	
APPROVED		DATE	

USED ON
F10026532 & F10026582

MATERIAL
CARBON STEEL A36

GROUP: Particle Physics Mechanical Support | CAGE CODE: 0U5R6

FERMI NATIONAL ACCELERATOR LABORATORY
UNITED STATES DEPARTMENT OF ENERGY

NAME
PLATE, CROSS MEMBER

SCALE	SIZE	DRAWING NUMBER	SHEET	REV
1:2	B	F10026526	1 OF 1	-