Fermi National Accelerator Laboratory
Particle Physics Division

Mechanical Department Engineering Note

Number: *MD-Eng-171* **Date:** *24 October 2008*

Project: *DES*

Project Internal Reference: *DES DocDB 2254*

Title: ***Mechanical Design of the DES V1 2k x 2k CCD Modules***

Author(s): *Greg Derylo (derylo@fnal.gov)* *FNAL/PPD/MD*

Reviewer(s): ---

Key Words: *DES / CCD*

Abstract/Summary:

The V1 design for the 2k x 2k pedestal-style module is presented. The assembly process is outlined. The results of FEA analyses are reported and found temperature gradient, thermal distortion, and stress results consistent with the analyses performed for the similar 2k x 4k module designs. Module mating with the focal plane support plate is discussed. An installation process discussion is also presented.

Applicable Codes: *N/A*

1.0 INTRODUCTION

DECAM will use 2k x 2k CCD sensors for guide & focus applications, as shown in drawing MD-436446. Three different module thicknesses are needed:

- Guide modules are to be coplanar with the 2k x 4k CCD array [4 required]
- High focus modules are to be 1.500 mm above the array (closer to the window) [4 required]
- Low focus modules are to be 1.500 mm below the array (further from the window) [4 required]

In the interest of assembly efficiency and spares inventory, it is desired to have a common design and accommodate the required thickness difference with the use of shims. Therefore, the base module configuration will be based on the low focus height. The design takes into account several factors previously discussed as goals for this effort:

- Overall design similar to the V3 2k x 4k CCD module design. That module is based on the earlier V2.1 2x4 module, the design of which is documented in MD-ENG-134 (Ref 1).
- A similar assembly process as the V3 2x4 modules is to be used
- Mounting on the focal plane support plate (FPSP) should be the same [but new clearance cutouts were needed for the shim fasteners, as discussed below]

The new module is therefore being developed closely following the V3 design and is being documented in this report. The design preserves the four layers of the 2k x 4k module – CCD, AlN readout board, AlN spacer, and Invar mounting foot, as well as two different mounting pins. 1.5 or 3.0 mm shims can be added as necessary, as discussed above. The resulting design is shown in the Figures below:

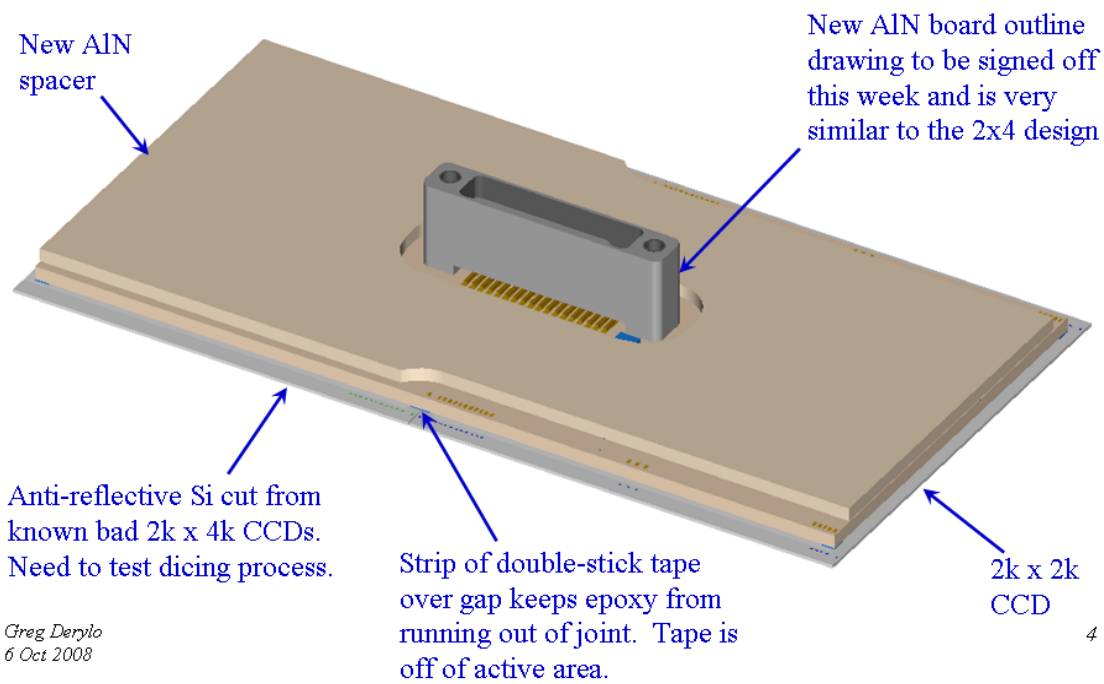

Figure 1.0-1: Image of the CCD with AlN Readout Board & Spacer

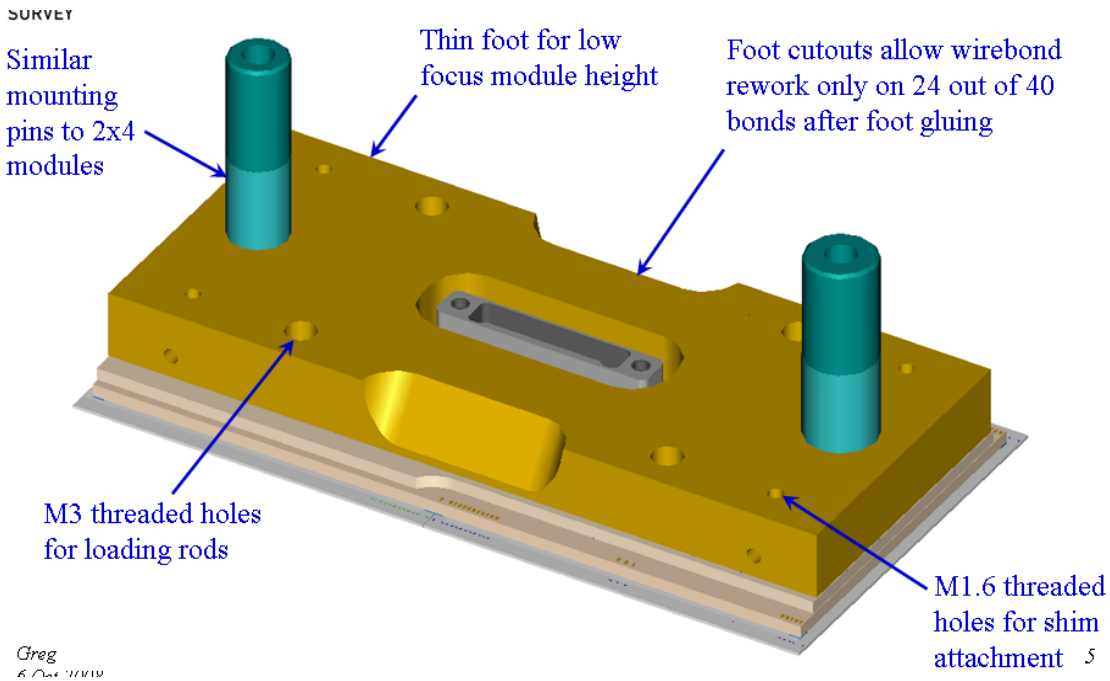

Figure 1.0-2: Image of the Module Configuration

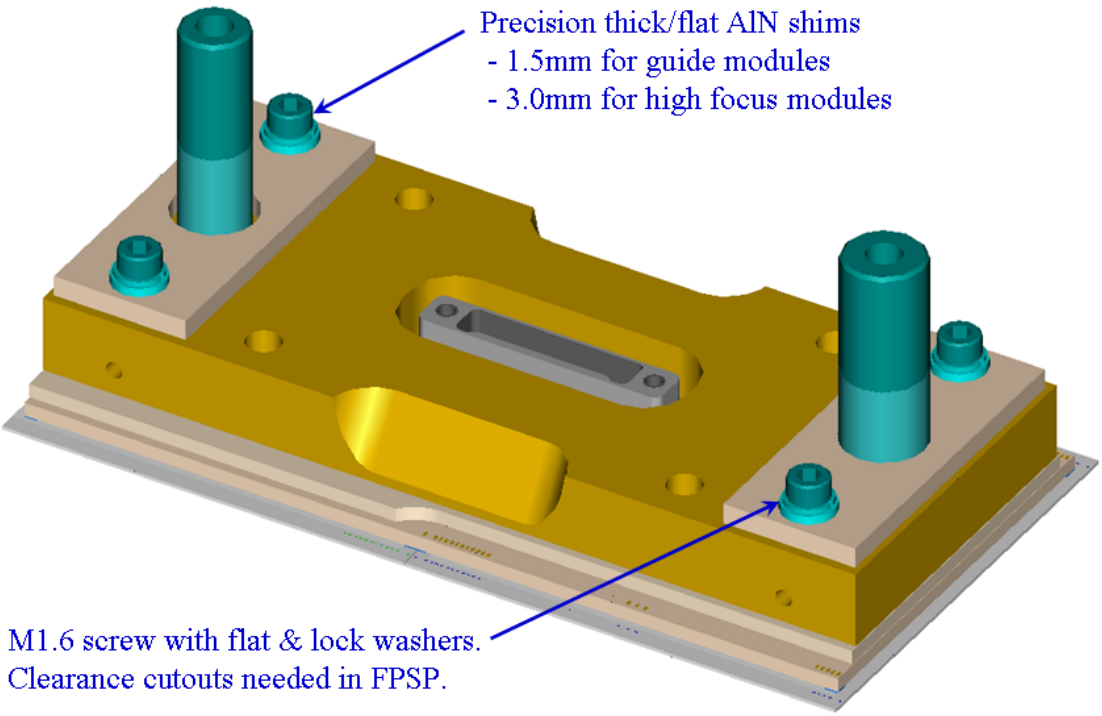

Figure 1.0-3: Image of the Module Configuration, with Shims

2.0 EVALUATION

The drawing numbers for the assemblies and parts are listed below. Also included are drawings related to mounting to the focal plane support plate (FPSP).

Description		Drawing
Base Module Assembly		436629
CCD Subassembly		436625
2k x 2k CCD		436076
Anti-Reflective Si		436622
AlN Subassembly		436621
AlN Readout Board		436623
AlN Spacer		436624
Foot Subassembly		436630
Foot		435633
Mounting Pin (5mm)		436634
Mounting Pin (6mm)		436635
Guide Module Assembly		436638
Upper Focus Module Assembly		436639
Shim		436640
Module / FPSP Interface		436636
FPSP Sample Section		436641
CCDI Card/Cable Assembly		436415 (preliminary)
Module Mounting Screw	Low Focus & Guide	436637
	High Focus	436416
Cable Restraint		TBD
Handling Rod		436418
Handling Rod Collar		436511

Various aspects of the module design are discussed further in the sections below.

2.1 ELEMENTS OF THE MODULE DESIGN

A brief discussion of each of the items in the module is included below.

CCD – The sensor is unchanged from the previous pictureframe module versions.

Anti-Reflective Si – A dead piece of silicon is placed next to the CCD for two reasons. First, since it is to be cut from known bad 2x4 CCDs (as determined by wafer-kevel probe testing), the anti-reflective coating on the CCD will cover the otherwise exposed back surface of the AlN readout board, which is larger than the 2x2 CCD itself. Second, it helps provide a more base during assembly steps when the CCD is face-down, such as during wirebonding and foot gluing.

Double-Sticky Tape – In order to keep epoxy from running out the gap between the Si pieces, a strip of double-sided tape, applied to the underside of the AlN board, will act as a dam by covering the gap. The tape strip should be applied so it stays off the active area of the CCD. A test piece, with blank Si and a glass AlN mockup, was assembled to test this technique. In addition, small tape squares will be used in the corners of the AlN board, as has previously been done on the 2x4 and pictureframe modules. Some of these squares will be in the active sensor area.

AlN Readout Board – The size and thickness of the board is unchanged from the V3 2k x 4k CCD design except the bondpads are located mostly at one end due to the physically smaller CCD. The longer sets of bondpads (and thus CCD pixel # 0,0) is still oriented towards the same end of the module as pin #1 on the connector. This maintains the overall alignment orientation defined in drawings MD-436446 and MD-436430 and as discussed in docdb #994.

AlN Spacer – This piece is very similar to the V3 2k x 4k design except its profile has been adjusted in the wirebond areas due to the different CCD size.

Foot – The foot design is very similar to the 2x4 module design with a few exceptions. It is 1.5 mm thinner in order to make a thinner overall module height. It also has small threaded holes, with side vents, for the attachment of the height shims. Finally, the scalloped cutouts are different since the wirebond regions have moved. These cutouts can now provide clearance only to the long set of bondpads which are located near the middle of the device. Cutouts cannot be added for the remaining areas due to interference with the loads rod and shim mounting holes. Therefore only 24 out of 40 bonds are potentially repairable on the manual wirebonder.

Mounting Pins – These pins are very similar to the ones used in the V3 2x4 module with three main exceptions. First, the section of the pins that get pressed into the foot has been reduced to 4 mm since this foot is thinner. The pin/foot press fits at room temperature and -100°C is shown below. Second, the lengths were increased to ensure that at least 1 mm of pin protrudes from the bottom of the pocket in the FPSP. Third, the heat treating step was left off since the thermal stability benefit on these parts is believed to be less important than material hardness.

3						Mark's Fits	
4	1-DL/L Material Values					Inches	MM
5	Aluminum:	0.99745			FN1	-0.00010	-0.003
6	304 Stn. Stl:	0.99823			FN1	-0.00060	-0.015
7	Invar:	0.99980			FN2	-0.00020	-0.005
8					FN2	-0.00100	-0.025
9							
10							
11	***Invar Pin -- 4mm Fit Into Foot***						
12			Room Temp.	-100 C		R.T. Inches	
13							
14	FP Support Plate	Max	4.028				
15	(Aluminum)	Min		4.006			
16							
17	Pin	Max	4.000	3.999		0.1575	
18	(Invar)	Min	3.995	3.994		0.1573	
19							
20	Module Foot	Max	3.990	3.989		0.1571	
21	(Invar)	Min	3.985	3.984		0.1569	
22							
23	Pin / FP Plate Fit	Max					
24	(slip)	Min					
25							
26	Pin / Foot Fit	Max	-0.015	-0.015		-0.0006	
27	(press)	Min	-0.005	-0.005		-0.0002	

Epoxy – The same epoxies used for the V3 2k x 4k CCD module are to be used here: Epotek 301-2 for all joints except the connector-to-foot reinforcement, which uses 3M Scotchweld 2216.

Shims – 1.500 and 3.000 mm are needed to construct modules of different types. A preliminary copy of the drawing was sent to a vendor (Valley Design, in Santa Cruz) who confirmed that the thickness, flatness, and surface finish tolerances specified are achievable. Some sorting of the shims based on thickness measurements may be utilized to achieved the best set pairings.

Weight Estimate – The weights for these components are estimated below. The sum of these weights is between 80.3 and 85.3 grams, depending on the shims used.

CCD =	(32.67 * 33.32 * 0.25) * 0.00233 = 0.63 g
Anti-reflective Si =	(30.50 * 33.32 * 0.25) * 0.00233 = 0.59 g
Epoxy joint #1 =	(61.72 * 29.97 * 0.10) * 0.00095 ~ 0.2 g
AlN readout board =	7.1 g (actual weight of 2x4 V1 board with Airborn connector & RTD)
Epoxy joint #2 =	~0.2 g
AlN spacer =	(1562 mm^3) * 0.00326 = 5.1 g
Epoxy joint #3 =	~ 0.2 g
Foot =	(7445 mm^3) * 0.00805 = 59.9 g
5mm Pin =	(329 mm^3) * 0.00805 = 2.6 g
6 mm Pin =	(466 mm^3) * 0.00805 = 3.8 g
3 mm Shim =	2* (617 mm^3) * 0.00326 = 4.0 g
Shim Fasteners =	4 * (20.8 + 6.6 + 2.6 mm^3) * 0.008 = 1.0 g

2.2 MODULE ASSEMBLY

The basic assembly outline is shown below. New tooling is being designed for these assembly steps. A detailed, step-by-step procedure will be written for each part of the assembly process, as was done for other modules (DES docdb #104). As has been done for previously-constructed units, paper travelers will be maintained for each CCD module to keep track of part serial numbers, technician name & date, special comments, etc.

1. Clean feet, pins, and AlN spacers as they are received
2. Inspect parts
3. Install pins into feet
4. Inspect installed pins
5. Construct AlN readout board subassy
    a. Receive and clean AlN readout board
    b. Install conductive foam into Airborn connector to short pins together
    c. Use jig to position spacer (with double-stick tape squares) onto readout board
    d. Apply epoxy and allow to cure
6. CCD installation
    a. Install double-stick tape squares and gap strip to underside of ALN board
    b. Move CCD and blank Si from Gelpak cases to assembly jig
    c. Use jig to position AlN onto Si
    d. Transfer assembly to precision-flat vacuum granite plate
    e. Apply epoxy between CCD and AlN readout board
7. Wirebonding
    a. Transfer CCD to wirebonding carrier plate
    b. Use an ESD-safe container to take it to the Lab D bonding room
    c. Wirebond the 40 connections between the AlN board and the CCD
    d. Repackage fixture in the ESD-safe container and return to Lab C south
8. Foot Gluing
    a. Replace connector conductive foam with shorting plug
    b. Transfer CCD to fixture
    c. Use jig to position foot over CCD subassembly
    d. Apply epoxy between foot and AlN spacer
9. Module thickness inspection
    a. Transfer CCD gluing jig top plate with module still attached to the QC4000 CMM
    b. Measure thickness over a course grid
    c. Measure edges relative to mounting features
    d. Return to workbench
10. Transfer module to storage box
11. Apply epoxy between electrical connector and foot
12. Clean contamination from CCD surface as necessary
13. Deliver completed module for electrical and flatness testing

2.3 MODULE THERMAL ANALYSIS

The temperature gradient through the module was predicted as shown below. Since deformation near the connector has not appeared in the measurements of the V2.1 2x4 modules (Ref 1 predicted only about 1 micron of thermal deformation as a result of the connector CTE difference), the connector has been left out of this study for simplicity. In addition, the wirebond viewing cutouts in the foot were not part of the design when this study was made, but this difference is not believed to have a significant difference on the analysis results. The following heat transfer conditions were assumed:

- Mounting face temperature = -100°C (so three-digit results display indicates tenths of a degree)
- Radiative heat flux on CCD = $1 * \sigma * (293^4 - 173^4) = 367\ W/m^2$ heat flux or $367\ W/m^2 * (0.0634 * 0.0333\ m^2) = 0.775$ W / CCD
- CCD Amplifier = 40 mW maximum [Ref 1] (modeled as always on)
- RTD heat load is insignificantly small and has been ignored

The same material properties assumed in the FEA studies documented in Ref 1 were also used here.

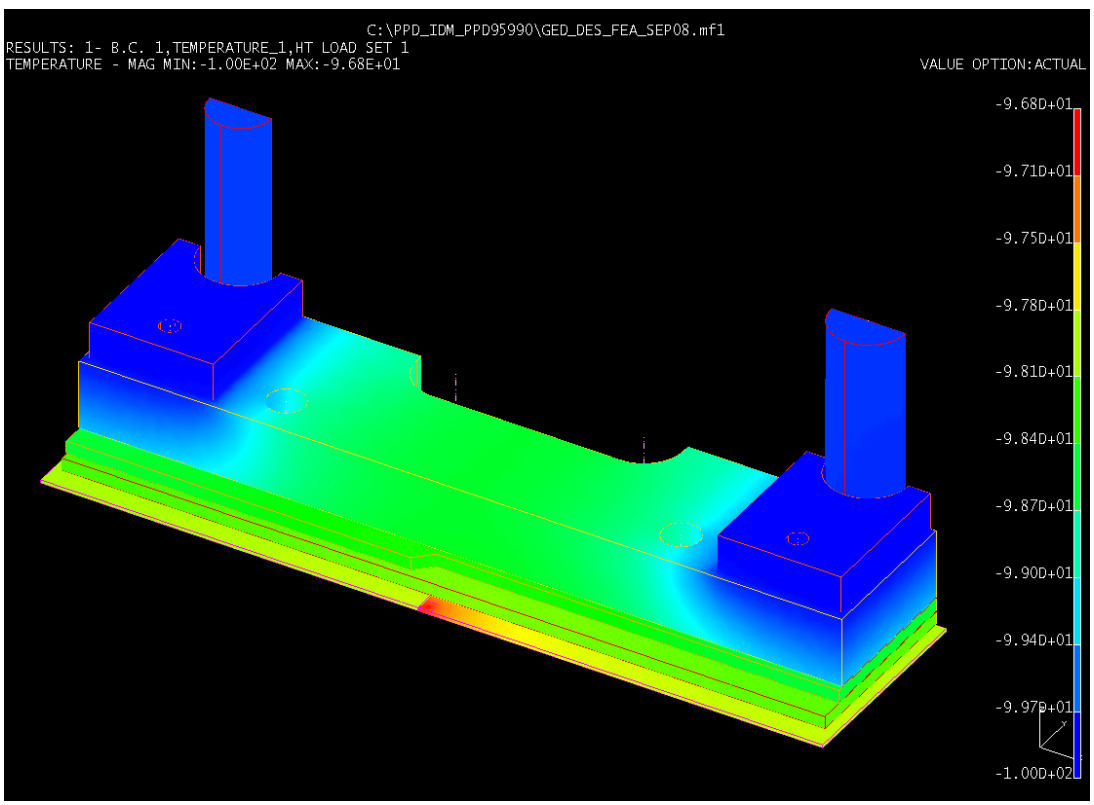

Figure 2.3-1: Temperature range within module ~3.2°C

Gradients within the AlN pieces are small, as the poorer-conducting epoxy tends to even out the ceramic temperature. The foot temperature gradient is ~1.5°C. The silicon temperature gradient is shown in Figure 2.3-2. The temperature in the active area is uniform to within ~1°C, with the amplifier corner experiencing some gradient.

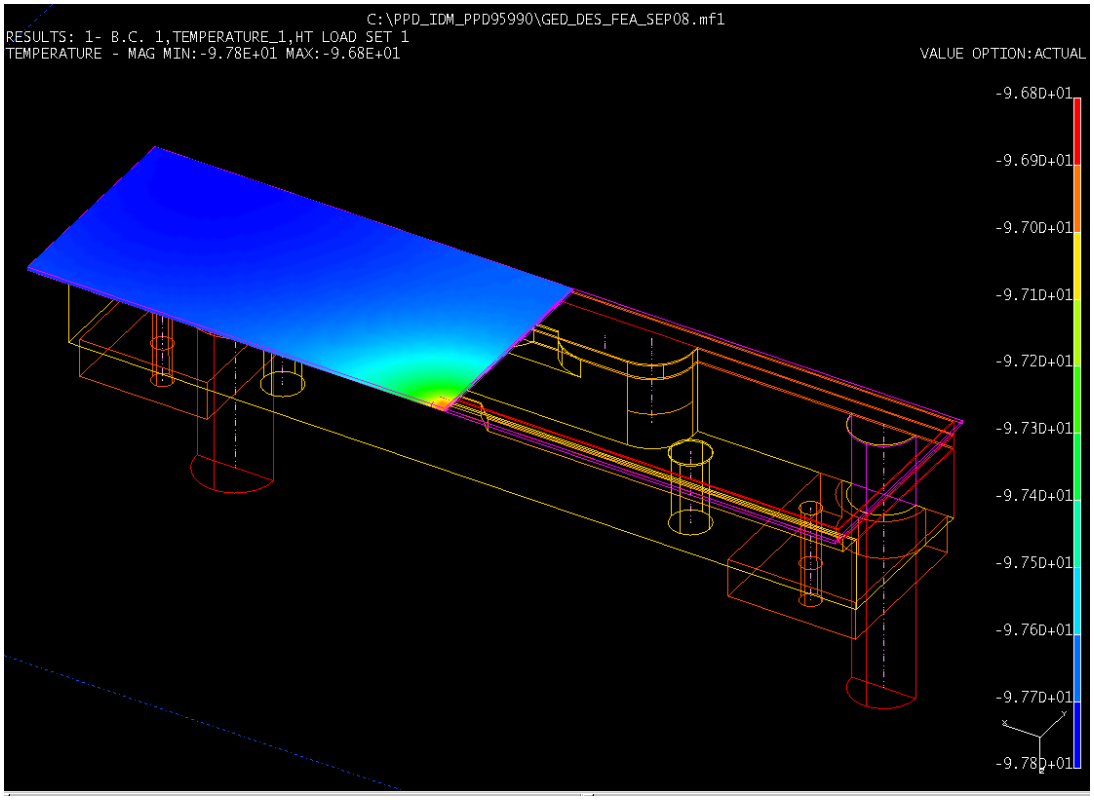

Figure 2.3-2: Temperature range within active silicon ~1°C

2.4 MODULE DEFORMATION AND STRESS ANALYSIS

As discussed for previous studies, thermal deformation is expected due to differential thermal expansion between the various materials used. The material properties assumed for this study are documented in Ref 2. For this work, a ½-module model was developed. Again, since deformation near the connector has not appeared in the measurements of the V2.1 2x4 modules (Ref 1 predicted only about 1 micron of thermal deformation as a result of the connector CTE difference), the connector has been left out of this study for simplicity.

Using the resulting module model, the thermal deformation was predicted assuming the temperature profile generated in Section 2.3 above. The overall Z-direction (normal to the FPSP) deflection is shown in Figure 2.4-1. The deformation of the active area of the silicon is shown in Figure 2.4-2. It indicates a thermal distortion of 2.3 microns in this region. However, an additional micron of deformation would be expected concentrated in the area of the connector based on the FEA results found in Ref 1.

The stresses predicted in each layer are shown in the Figures 2.4-3 through 2.4-9. The maximum calculated stresses for the 2x2 design are listed in Table 2.4-1 and are compared to the FEA results for the 2x4 V2.1 and V1 designs. Where higher stresses were predicted in V2.1 due to connector effects, similarly increased stresses are expected here but were not modeled for the sake of simplicity. The deformation and stress results are consistent with the analyses performed for these other module types.

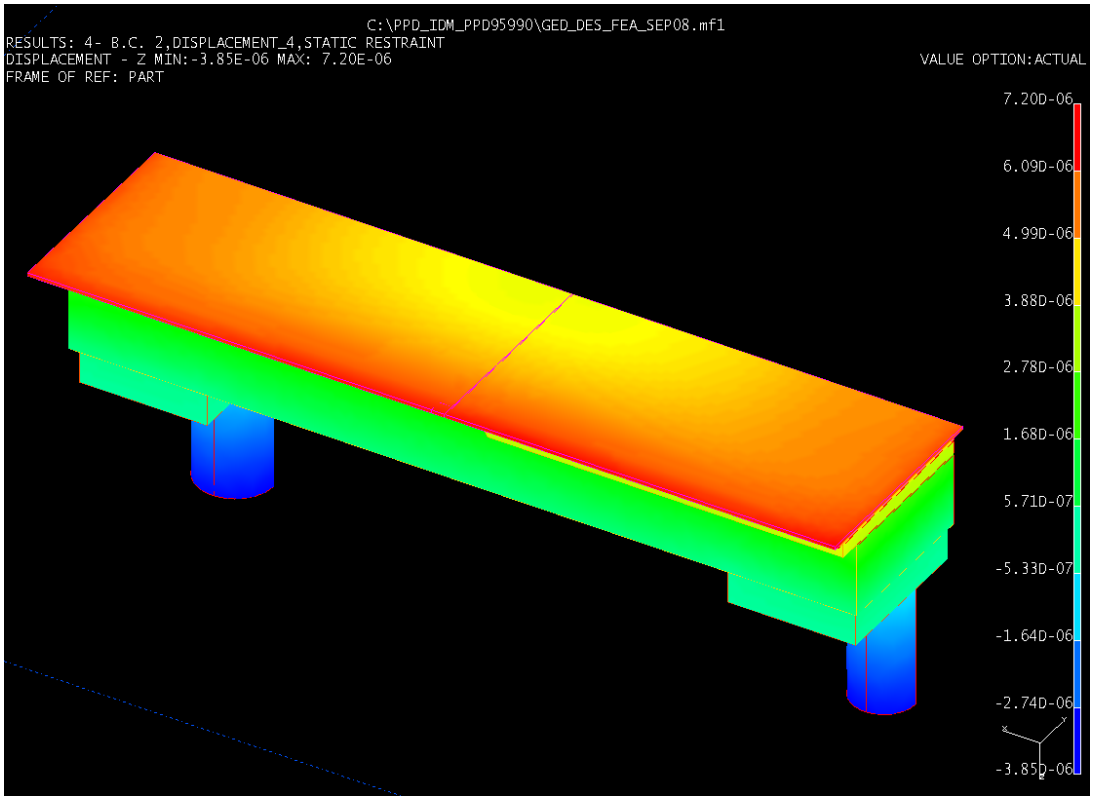

Figure 2.4-1: Thermal deformation of the module (m)

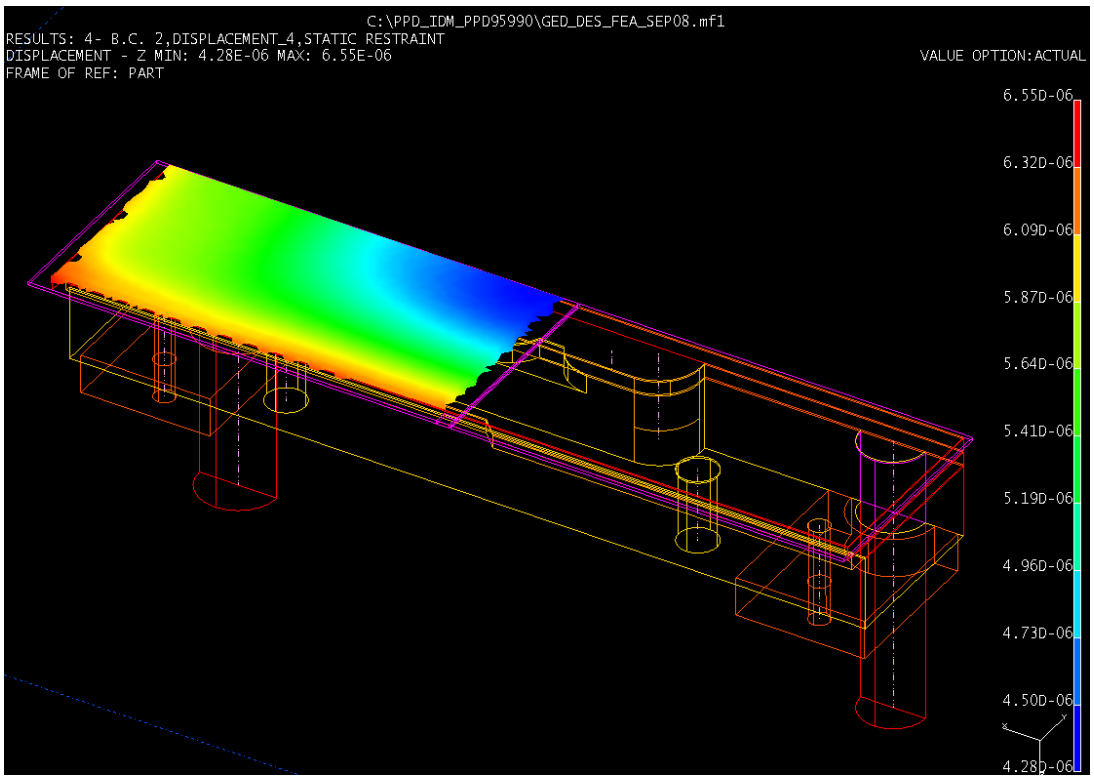

Figure 2.4-2: Thermal deformation of the active silicon area (m)
Peak to valley = 2.3 microns

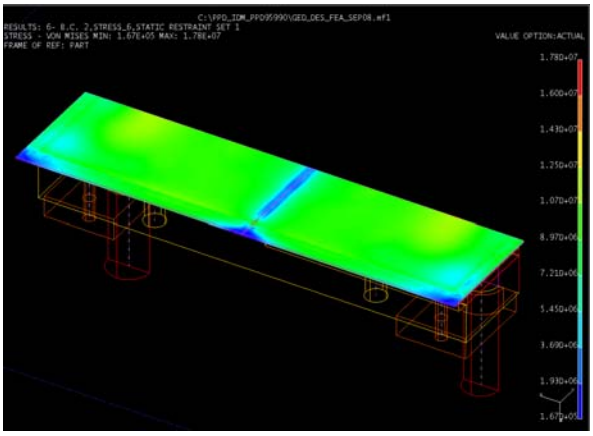

Figure 2.4-3: Stress in the Si (Pa)

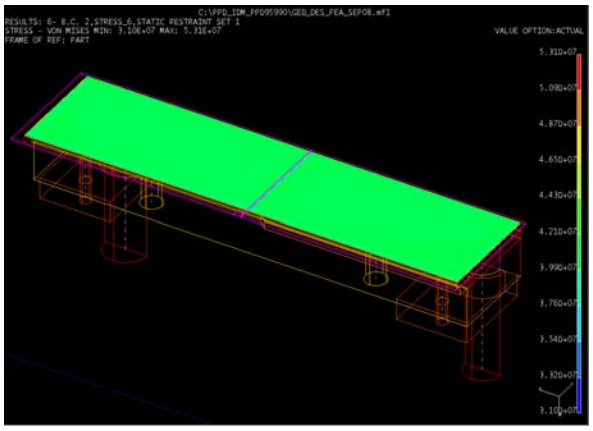

Figure 2.4-4: Stress in the Si/AlN epoxy (Pa)

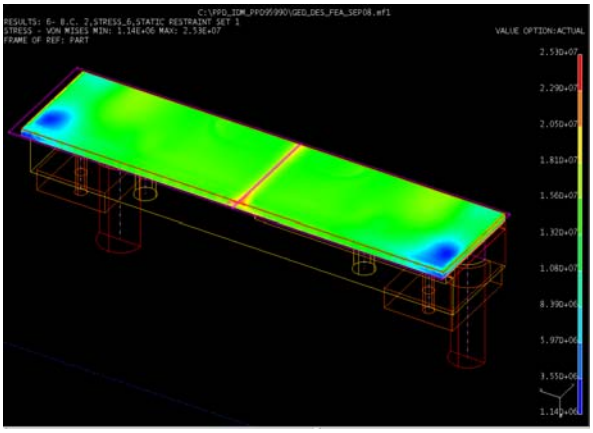

Figure 2.4-5: Stress in the AlN readout board (Pa)

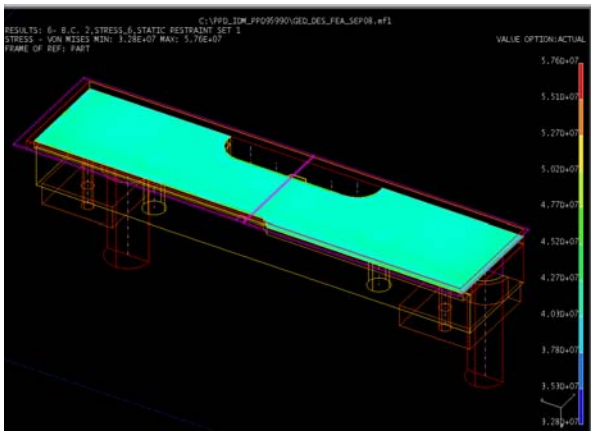

Figure 2.4-6: Stress in the AlN/AlN epoxy (Pa)

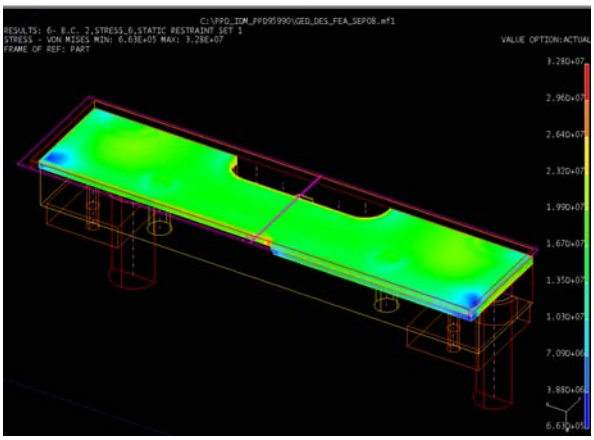

Figure 2.4-7: Stress in the AlN spacer (Pa)

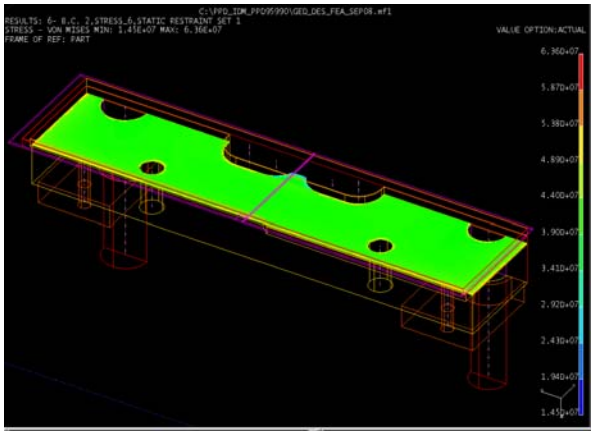

Figure 2.4-8: Stress in the AlN/Invar epoxy (Pa)

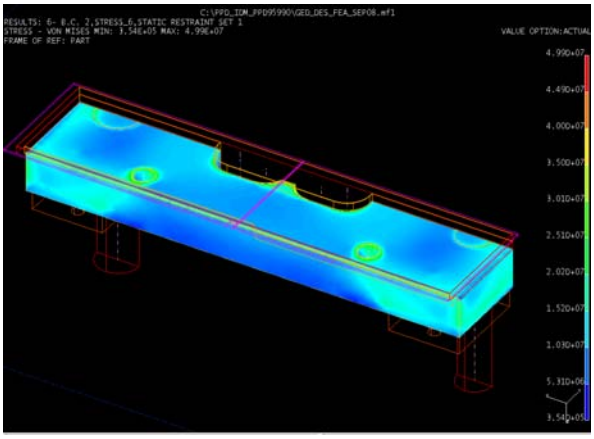

Figure 2.4-9: Stress in the foot (Pa)

Table 2.4-1: Estimated Module Stresses

Layer	Predicted V1 2x2 Stress (MPa)	Predicted V2.1 2x4 Stress [Ref 1] (MPa)	Predicted V1 2x4 Stress [Ref 2] (MPa)	Stress Limit [Ref 2] (MPa)	Comments
CCD	18	33	14.9	120	Higher V2.1 2x4 stresses due to connector modeling, which was not included here.
Si-to-AlN Epoxy Layer	~42 (bulk)	~ 44 (bulk)	~ 41 (bulk) max in module	~ 67	
AlN Readout Board	25	96	30 max in module	2100 comp. 280 tens.	Higher V2.1 2x4 stresses due to connector modeling, which was not included here.
AlN-to-AlN Epoxy Layer	~43 (bulk)	~ 43 (bulk)	~ 41 (bulk) max in module	~ 67	
AlN Spacer	33	34	30 max in module	2100 comp. 280 tens.	
AlN-to-Foot Epoxy Layer	~44 (bulk)	~ 43 (bulk)	~ 41 (bulk) max in module	~ 67	
Foot	50	~ 70	35	483	Higher V2.1 2x4 stresses due to connector modeling, which was not included here.
Foot-to-Connector Epoxy	Not modeled	~ 50	---		

2.5 MODULE INTERFACE WITH THE FOCAL PLANE SUPPORT PLATE (FPSP)

A section of the FPSP is shown in drawings 436629 and 436641. The FPSP is unchanged from the design needed for the 2x4 modules except that clearance holes are needed for the heads of the screws that hold on the thickness shims. The edge of these clearance holes should protrude slightly from the edge of the shim, thus preventing the air here from becoming trapped. When no shim is used, the vent holes for the M1.6 threaded holes connect these volumes to vacuum.

Detailed aspects of the interface are discussed below, including pin fits, module-to-module gap management, and determination of the appropriate mounting spring force.

2.5.1 Module Mounting Pin Fit

Modules pins and FPSP mounting holes have the same diameters and tolerances as specified for the V3 2x4 modules.

2.5.2 Module-to-Module Gaps

The fits previously documented in the V2.1 2x4 module design report (Ref 1) remain valid here. The overall length of the 2x2 modules is slightly shorter, but these modules are never mounted with another module on their rear edge. For some of the module configurations, the pins are 1.5 or 3 mm longer than those in the 2x4 modules, which would slightly reduce the maximum misalignment angle during installation.

2.5.3 Module Mounting Spring Force

Different mounting screw lengths are to be provided to maintain a consistent spring compression for all module types. The resulting spring force calc was discussed in the V2.1 2x4 module report (Ref 1). As documented above, the new modules are anticipated to be 80 to 85 grams, depending on configuration, compared to 94 grams for the 2x4 devices. Assuming a 100 gram total sprung weight, the Ref 1 calculation of force ratios then goes as follows:

- At zenith, the clamping force is reduced to 2 * 0.29 – 0.100 = 0.48 kgf
- Total spring force (cold) / sprung weight: Zenith = 0.466 / 0.100 = 4.66
  Horizontal = (2 * 0.29) / 0.100 = 5.8

The springs can therefore resist a shock load of 4.7 to 5.8 G's in the camera's axial direction (depending on orientation) before the clamping force is reduced to zero and the module can momentarily lift off the FPSP. Per Ref 3, shocks of different levels are expected during earthquakes, general handling, and shipping. The largest shocks predicted are for truck loads, which are 3.5-g longitudinal, 2-g lateral, and 6-g vertical. It is recommended that camera shipping be planned to keep shocks to less than that required to lift the modules.

A sufficiently large shock in the transverse direction could overcome static friction between the feet and the FPSP and allow small shifts in module positions. Assuming a clamping force of 0.48 kgf at zenith and a static friction coefficient of 0.61, a force of 0.293 kgf is needed to initiate motion. Dividing by the sprung weight, this results in a shock resistance of 2.9 g's. Operation on the telescope is not expected to exceed this value, and earthquake loading is only 0.65 g's [Ref 3].

2.5.4 MODULE INSTALLATION

It is anticipated that the assembly sequence for these modules will be the same as that used for the 2x4 modules, which was first presented in Ref 1. However, it is no longer the plan to pre-attach the CCDI cable on the modules before installation into the FPSP. These cables will be installed afterwards, thus simplifying this process. This

approach requires a completely new design for the cable restraint that attaches to the back surface of the FPSP. This restraint will have to be open on one end to allow it to be slid onto the cable since, with integral cards built onto each end, it can no longer be slipped over the end of the cable. It should be the goal of this design to be common to all four module types. The details of this design, however, will not be considered as part of this report.

2.6 MODULE STORAGE BOX

A box similar to the one used for the 2x4 modules has been designed, with thicker base to accommodate the slightly longer screws and clearance cutouts for the heads of the shim screws. Since it is no longer the plan to permanently install the CCDI cable immediately after module completion, it is not necessary to have a storage container design that accommodates the coiled-up cable.

3.0 CONCLUSIONS

The V1 design of the 2k x 2k pedestal-style module has been presented. The assembly process is outlined. The results of FEA analyses are reported and found temperature gradients and thermal distortions consistent with the previously-studied 2x4 module design. Module integration with the FPSP design is discussed.

4.0 REFERENCES

1. MD-ENG-134, "Mechanical Design of the DES V2.1 2k x 4k CCD Module," by Greg Derylo, 19 Oct 2007 [DES docdb #979].
2. MD-ENG-110, "Updated Thermal Study of the DES 2k x 4k CCD Module V1 Design," by Greg Derylo, 9/5/06 [DES docdb #173].
3. DES docDB #763, "Environmental Conditions at DES Sites," 8/29/07.