5022TA

BELOW-THE-HOOK LIFTING DEVICE
Engineering Note Cover Page

Lifting Device Numbers:

FNAL Site No. _____ Div. Specific No. 162 Asset No. _____

If applicable — If applicable — If applicable

ASME B30.20 Group: (check one)

- [X] Chapter 20-1 Structural and Mechanical Lifting Devices
- [ ] Chapter 20-2 Vacuum Lifting Devices
- [ ] Chapter 20-3 Close Proximity Operated Lifting Magnets
- [ ] Chapter 20-4 Remotely Operated Lifting Magnets
- [ ] Chapter 20-5 Scrap and Material Handling Grapples

Device Name or Description: U of Colorado Chamber lifting fixture (E906)

Device was (check all applicable)

- [ ] Purchased from a Commercial Lifting Device Manufacturer. Mfg Name _____
- [X] Designed and Built at Fermilab Assy drawing number F10027664
- [ ] Designed by Fermilab and Built by a Vendor. Assy drawing number _____
- [ ] Provided by a User or other Laboratory
- [ ] Other: Describe _____

Engineering Note Prepared by: Jim Kilmer Date: 9/26/2014

Engineering Note Reviewed by: [signature] Date: 10/7/14

Lifting Device Data:

Capacity: 2515 lb

Fixture Weight: 115 lb

ASME BTH -1 Design Category: (See ASME BTH-1 Section 2-2) [ ] Category A [X] Category B

ASME BTH -1 Service Class: (See ASME BTH-1 Section 2-3) [X] 0 [ ] 1 [ ] 2 [ ] 3 [ ] 4

Duty Cycle _____ 8, 16 or 24 hour rating (applicable to groups III, and IV)

Inspections Frequency: Before each use.

Service (refer to B30.20 for definitions) [X] normal [ ] heavy [ ] severe

Rated Load Test by FNAL (if applicable) Date 10-9-2014 Load 2515 lbs

[ ] Check if Load Test was by Vendor and attach the certificate

Satisfactory Load Test Witnessed by: [signature] David Erickson

Signature (of Load Test Witness) [signature]

Notes or Special Information:

Lifting Fixture Note
for U of Colorado Chamber
Jim Kilmer
August 25, 2014

This note documents a new lifting fixture for handling a University of Colorado wire chamber. The standard to be used for the lifting fixture is AMSE BTH-1-2011, Design of Below-the-Hook Lifting Fixtures. The chamber consists of an outer gas chamber weighing 1800 lb and an inner chamber frame weighing 600 lbs. This fixture is used only for handling the chamber and then only during maintenance. Its Design Category will still be called B and its service class is zero. This forces the design factor Nd to be 3.0 even though a case could be made for a category A useage. From Specifications for Aluminum Structures by the Aluminum Association for 6061-T6 aluminum structural extrusions Fy is given as 35 ksi. The lifting beam can be used for several of the maintenance steps but the most rigorous lifting situation is when the fixture lifts the entire assembly at the widest point on the beam. Use that case for sizing the beam.

Use the case number 1 on page 63 of Engineering Data for Aluminum Structures by the Alumninum Association which is a simply supported beam with a center point load.

$F_y := 35000 \cdot psi$ 6061 - T6 yield stress $N_d := 3$

$P := 2515 \cdot lbf$ Maximum load on beam

$L := 2 \cdot 67.75 \cdot in$ Maximum distance between load points

$V := \frac{P}{2}$ Maximum Shear Forces

$M_{max} := \frac{P \cdot L}{4} = 8.52 \times 10^4 \cdot lbf \cdot in$ Maximum moment on beam

The beam used for the fixture is an Aluminum Association standard I-beam from Table 14B page 31 of the Engineering Data for Aluminum Structures. The beam has the following properties:

$d := 9 \cdot in$ Depth of beam

$b := 5.5 \cdot in$ Width of beam

$A := 7.11 \cdot in^2$ Cross sectonal Area of beam

$I := 102.2 \cdot in^4$ Moment of Inertia

$S := 22.67 \cdot in^3$ Section Modulus of beamσ

$f_v := \frac{V}{A} = 176.864 \cdot psi$ Shear Stress in beam

$f_b := \frac{M_{max}}{S}$ Bending Stress in beam

$f_b = 3.758 \times 10^3 \cdot psi$

From equation 3-6 of BTH-1-2011:

$F_b := \frac{1.10 \cdot F_y}{N_d} = 1.283 \times 10^4 \cdot psi$ Allowable bending stress

Equation 3-28

$F_v := \frac{F_y}{N_d \cdot \sqrt{3}} = 6.736 \times 10^3 \cdot psi$ Allowable shear stress

The stresses in the bar are below these allowables so the I-beam is OK.

The pick point and load connections are welded lugs. The pick point is the most heavily loaded. The lug is shown in the drawings. The weld is all around the lug and is a 3/8 inch fillet weld.

$t_w := .375 \cdot in \cdot .707 = 0.265 \cdot in$ Throat of weld

$l_w := 2 \cdot 7 \cdot in = 14 \cdot in$ Length of weld

$A_w := t_w \cdot l_w = 3.712 \cdot in^2$ Area of weld

From section 3-3.4.1of BTH-1-2011 Welds loaded perpendicular to the axis of the weld shall be designed for tension.

$f_t := \frac{2515 \cdot lbf}{A_w} = 677.578 \cdot psi$ Maximum tensile force on the lug welds

Using 4043 rod the allowable tensile stress for a 6061 joint is 12.3 ksi. The equivalnet allowable shear stress for a fillet weld using 4043 rod would be 5.9 ksi. Therefore the weld stress is OK. The allowable tensile limit for a weld is given on page VI-74 and the allowable shear stress on a fillet weld is given on page VI-76 of The Aluminum Design Manual 2010.

For the pin connections of the shackles use section 3-3.3.1 of BTH-1-2011. It requires taking the least value of several different calculations to determine the allowable strength of the pin hole in the plate. For this calculation assume that the minimum shackle pin of 5/8" in diameter is used to connect the load to the lifting fixture or the crane.

$D_h := 1.25 \cdot in$ Hole diameter

$D_p := 0.625 \cdot in$ Pin diameter

$F_u := 42000 \cdot psi$ Ultimate Tensile strength of 6061-T6

It is OK to use this ultimate strength for the lugs because the pin hole in the lugs is well outside the heat affected zone of the attachment weld.

$b_e := 1.5625 \cdot in$ Actual width of the pin connected plate between the edge of the hole and the edge of the plate on a line perpendicular to the line of action of the applied load

$$C_r := 1 - 0.275 \cdot \sqrt{1 - \frac{D_p^2}{D_h^2}} = 0.762$$

$t := 1 \cdot in$ Thickness of the lug

beff must be the smaller of these two equations

$$b_{eff} := 4 \cdot t$$

OR

$$b_{eff} := b_e \cdot 0.6 \cdot \frac{F_u}{F_y} \cdot \sqrt{\frac{D_h}{b_e}} = 1.006 \cdot in$$

$$P_t := C_r \cdot \frac{F_u}{1.2 \cdot N_d} \cdot 2 \cdot t \cdot 1.006 \cdot in = 1.788 \times 10^4 \cdot lbf$$ Allowable tensile strength thrugh pinhole

This is the allowable single plane fracture strength beyond the pinhole,Pb

$$R := 4.5 \cdot in - 2.88 \cdot in = 1.62 \cdot in$$

$$P_b := C_r \cdot \frac{F_u}{1.2 \cdot N_d} \left[1.13 \cdot \left(R - \frac{D_h}{2} \right) + \frac{0.92 \cdot b_e}{1 + \frac{b_e}{D_h}} \right] \cdot t = 1.567 \times 10^4 \cdot lbf$$

This is the allowable double plane shear strength Pv

$$\phi := 55 \cdot \frac{D_p}{D_h} = 27.5$$

$$a := 1 \cdot in$$

$$A_v := 2 \cdot \left[a + \frac{D_p}{2} \cdot \left(1 - \cos\left(\frac{\phi}{57.3} \right) \right) \right] \cdot t = 2.071 \cdot in^2$$

$$P_v := \frac{0.7 \cdot F_u}{1.2 \cdot N_d} \cdot A_v = 1.691 \times 10^4 \cdot lbf$$

The smallest of Pt, Pb, and Pv is15,670 pounds and the load is 2515 pounds so all of the lugs are OK. The lifting fixture meets the demands of BTH-1-2011.

DESCRIPTION: F10027664
CATEGORY: WELDMENT
PROJECT:

REV	REVISION CONTROL DOCUMENT	DATES	SIGNATURES	
-	F10027664---RCD		DRAWN	
			APPROVED	

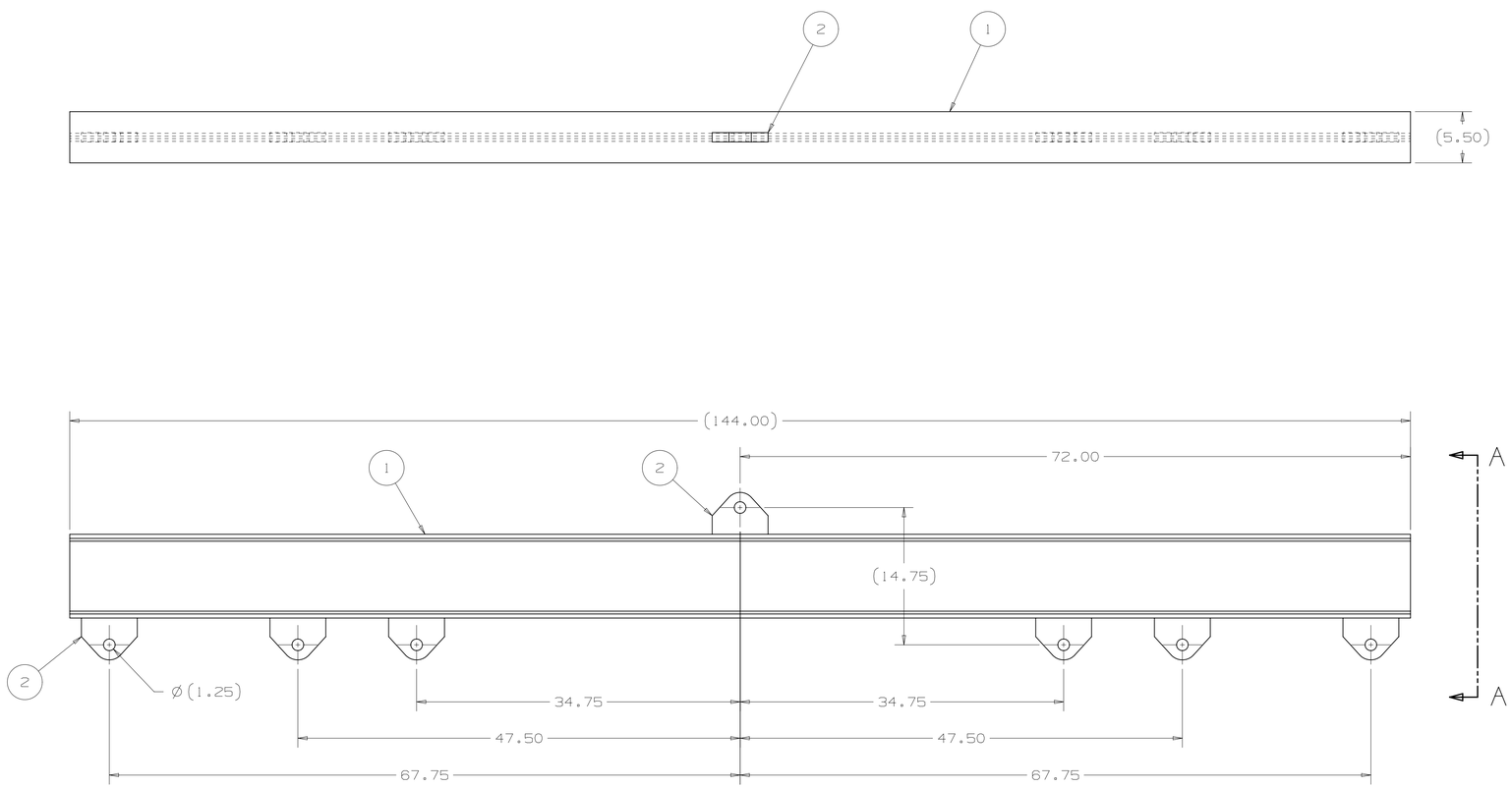

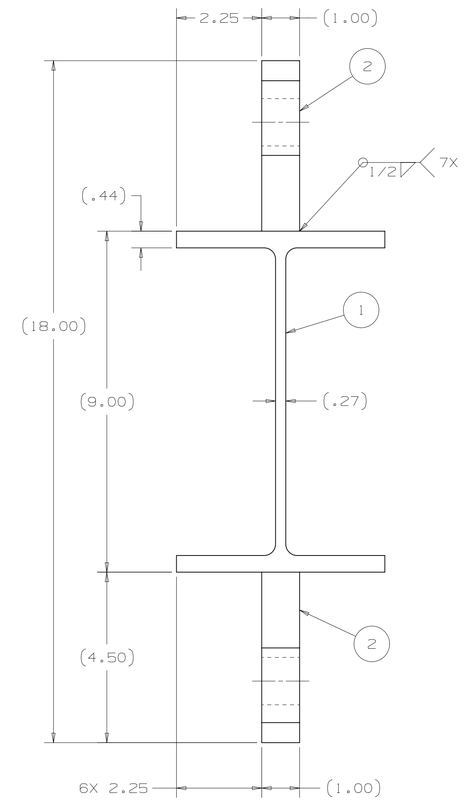

VIEW A-A
SCALE: 1:2

ITEM	PART NO.	DESCRIPTION	QTY.
2	COML.	ALUMINUM BEAM, EXTRUDED, 9" X 8.361#, X 144.00 LG.,QQA 200/16, ASTM B308	1
1	F10027661	TAB, LIFTING	7

PARTS LIST

UNLESS OTHERWISE SPECIFIED

±.X	±.XX	±.XXX	±X/X	±X°
.1	.02	.005	1/16	1°

BREAK ALL SHARP EDGES .015 MAX.
DO NOT SCALE DRAWING
DIMENSIONS BASED ON ASME Y14.5M-1994
MAX. ALL MACH SURFACES 125
DRAWING UNITS: INCHES

DRAWN	B.CYKO	DATE	26-Aug-2014
CHECKED	J.KILMER	DATE	28-Aug-2014
APPROVED	J.KILMER	DATE	28-Aug-2014
USED ON			
MATERIAL	SEE PARTS LIST		
GROUP: Particle Physics Mechanical Support		CAGE CODE: 0U5R6	

FERMI NATIONAL ACCELERATOR LABORATORY
UNITED STATES DEPARTMENT OF ENERGY

NAME
WELDMENT, SPREADER BAR

SCALE	SIZE	DRAWING NUMBER	SHEET	REV
1:8	D	F10027664	1 OF 1	-

DESCRIPTION: F10027661
CATEGORY: TAB PROJECT:

REV	REVISION CONTROL DOCUMENT	DATES	SIGNATURES	
-	F10027661---RCD		DRAWN	
			APPROVED	

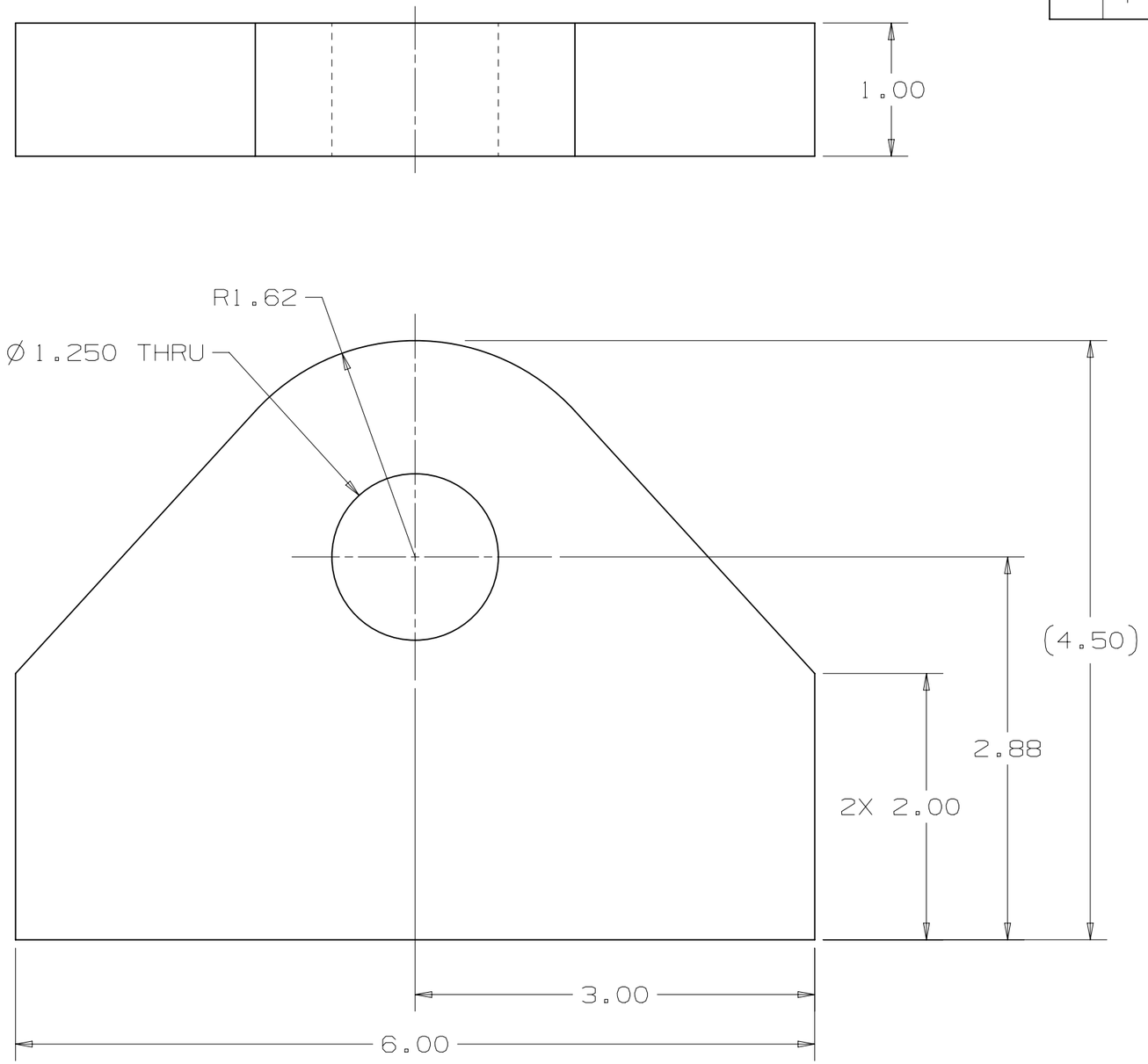

UNLESS OTHERWISE SPECIFIED				
±.X	±.XX	±.XXX	±X/X	±X°
.1	.02	.005	1/16	1°

BREAK ALL SHARP EDGES .015 MAX.
DO NOT SCALE DRAWING
DIMENSIONS BASED ON ASME Y14.5M-1994
MAX. ALL MACH SURFACES 125
DRAWING UNITS: INCHES

DRAWN	B.CYKO	DATE	26-Aug-2014
CHECKED	J.KILMER	DATE	28-Aug-2014
APPROVED	J.KILMER	DATE	28-Aug-2014

USED ON
F10027664

MATERIAL
ALUMINUM 6061-T6

GROUP: Particle Physics Mechanical Support
CAGE CODE: 0U5R6

FERMI NATIONAL ACCELERATOR LABORATORY
UNITED STATES DEPARTMENT OF ENERGY

NAME
TAB, LIFTING

SCALE	SIZE	DRAWING NUMBER	SHEET	REV
1:1	B	F10027661	1 OF 1	-

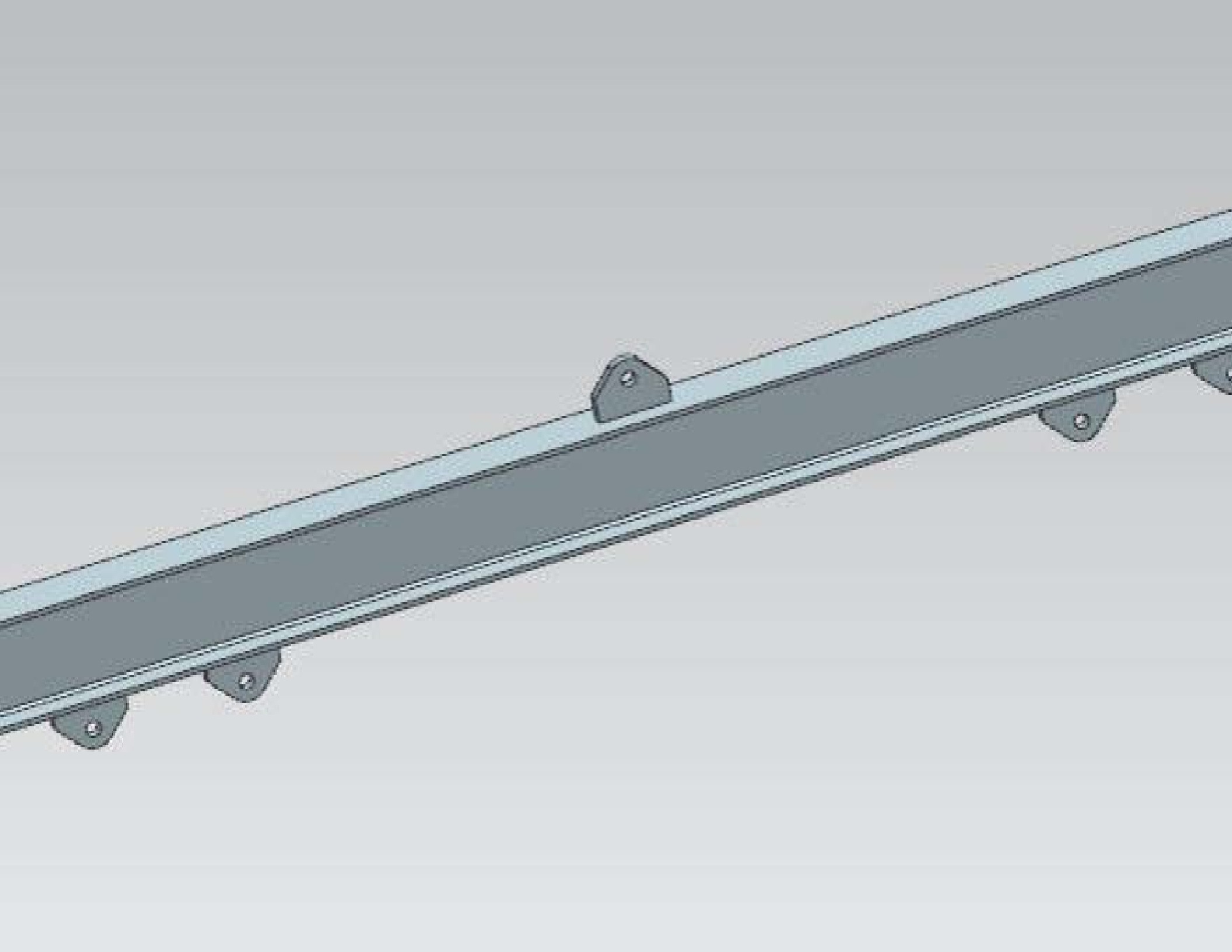

MAB
MAB
MAB