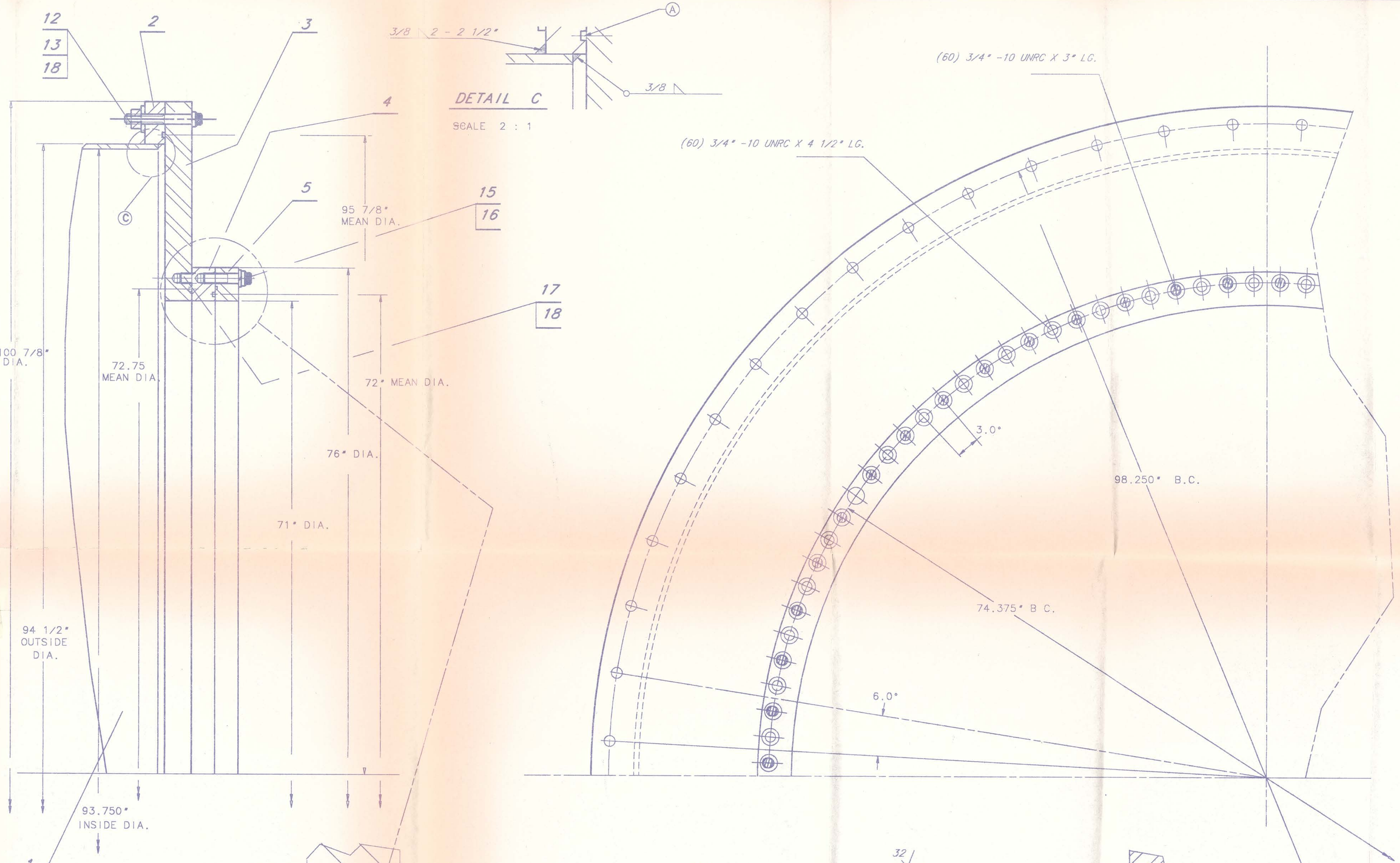

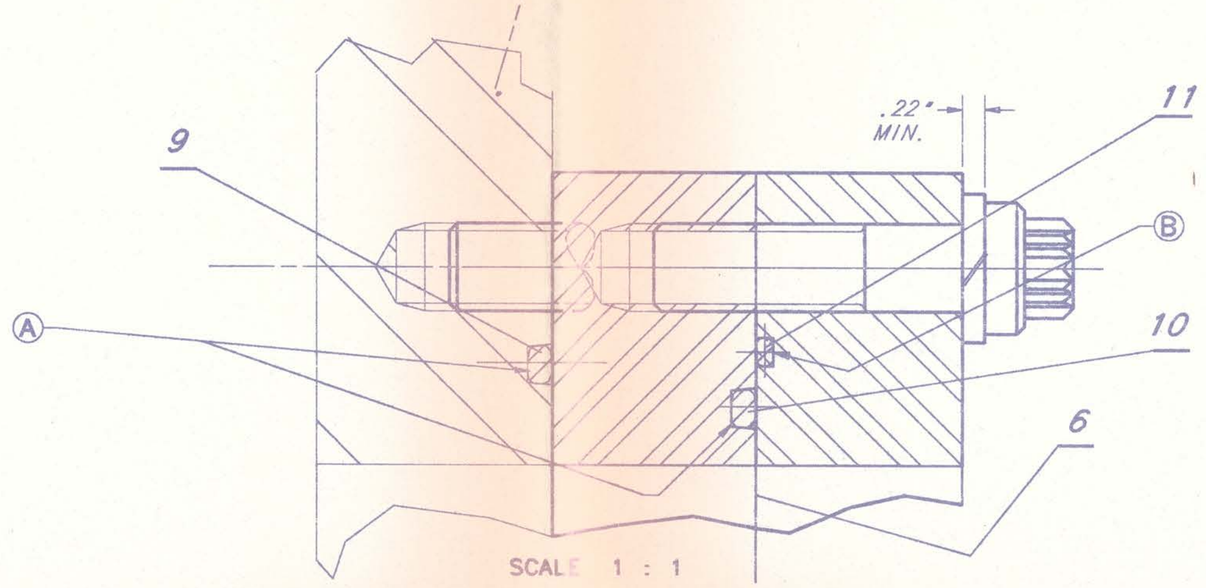

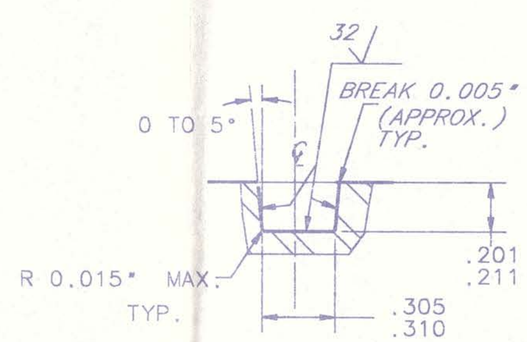

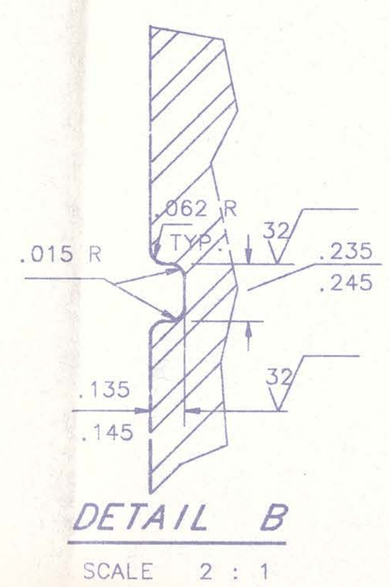

REV.	DESCRIPTION	DRAWN	DATE
		APPD.	DATE

ITEM NO.	PART NO.	DESCRIPTION OR SIZE	QTY. REQ.
19			
18		3/4" X .18" MAX. THICK LOCK WASHER	120
17		3/4"-10 UNRC X 4 1/2" LG. FERRY CAP COUNTR-BOR SCREW	60
16		3/4" X .22" MIN. THICK LOCK WASHER	60
15		3/4" -10 UNRC X 3" LG. FERRY CAP COUNTR-BOR SCREW	60
14			60
13		3/4" -10 UNC HEX. NUT	60
12		3/4" -10 UNRC X 5 1/2" LG. FERRY CAP COUNTR-BOR SCREW	60
11		ALUMINUM COMPRESSIVE RING	1
10		O-RING SEAL DOWNSTREAM	1
9		O-RING SEAL UPSTREAM	1
8			
7			
6		WINDOW COMPONENTS SUBASSEMBLY (MYLAR/KEVLAR/MYLAR)	1
5		VACUUM WINDOW DOWNSTREAM FLANGE	1
4		VACUUM WINDOW UPSTREAM FLANGE	1
3		100 7/8" O.D. ADAPTER FLANGE	1
2		FLANGE 100 7/8" O.D.	1
1		PIPE 94 1/2" O.D. X 3/8" WALL	1

PARTS LIST

UNLESS OTHERWISE SPECIFIED			ORIGINATOR	ANDREW SZYMULANSKI	
FRACTIONS	DECIMAL	ANGLES	DRAWN	ANDREW SZYMULANSKI	X 4870
±	±	±	CHECKED		
1. BREAK ALL SHARP EDGES 1/64 MAX.			APPROVED		
2. DO NOT SCALE DWG.			USED ON		
3. DIMENSIONING IN ACCORD WITH ANSI Y14.5 STD'S			MATERIAL-		
√ MAX. ALL MACHINED SURFACES					

FERMI NATIONAL ACCELERATOR LABORATORY
UNITED STATES DEPARTMENT OF ENERGY

E-832 1.8 m VACUUM WINDOW ASSEMBLY
NEW MUON BUILDING
R/D MECHANICAL DEPARTMENT

SCALE	DRWG SIZE	DRAWING NUMBER	REV.
1 : 4 AND AS NOTED	D	9220.832.MD-285382	

IDEAS LEVEL 4.1 USERNAME: SZYMULANSKI
CADFILE: E832DWG.

REV.	DESCRIPTION	DRAWN	DATE
		APPD.	DATE

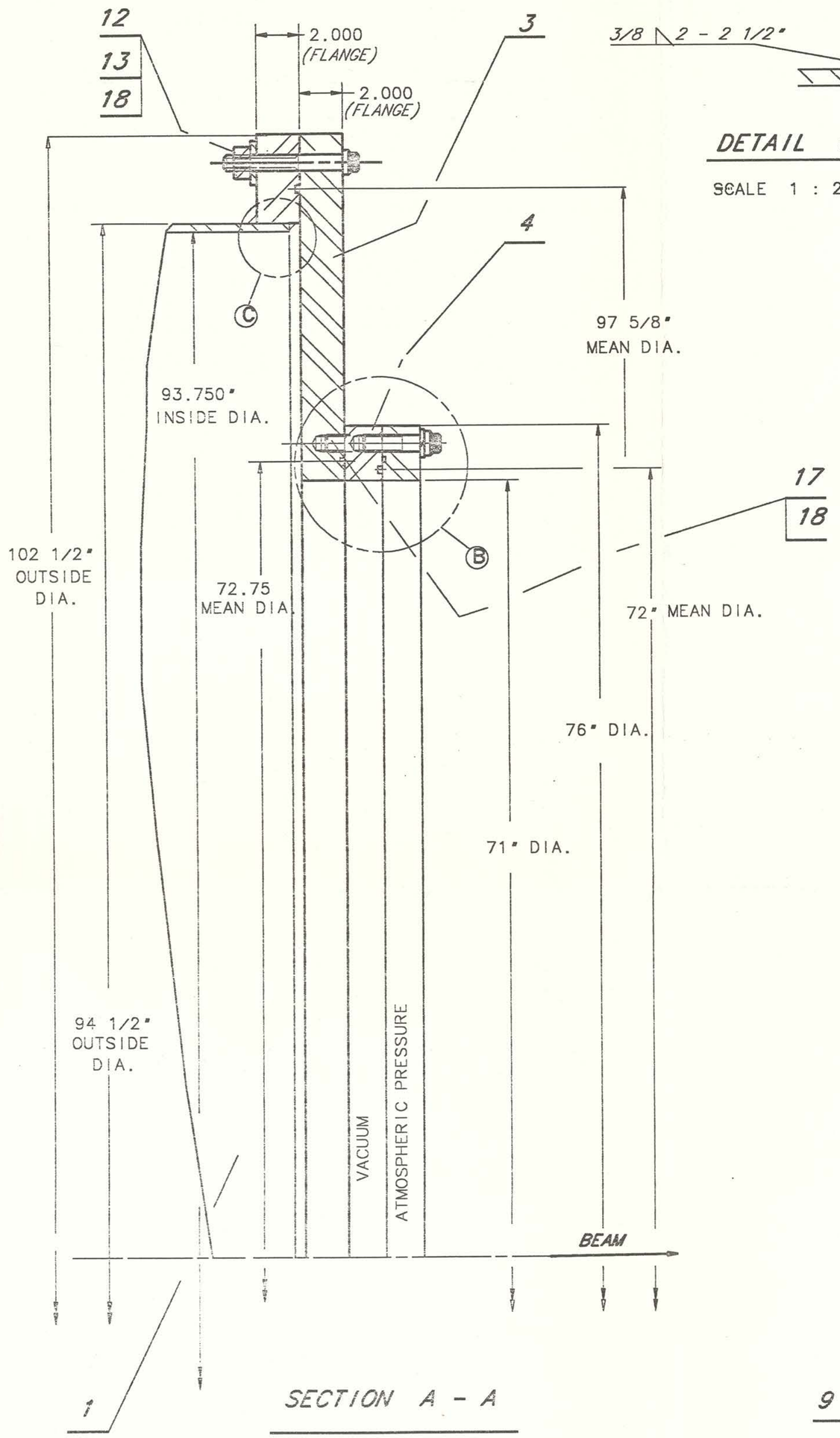

SECTION A - A

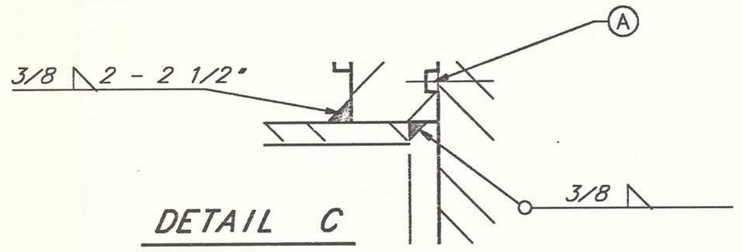

DETAIL C

SCALE 1 : 2

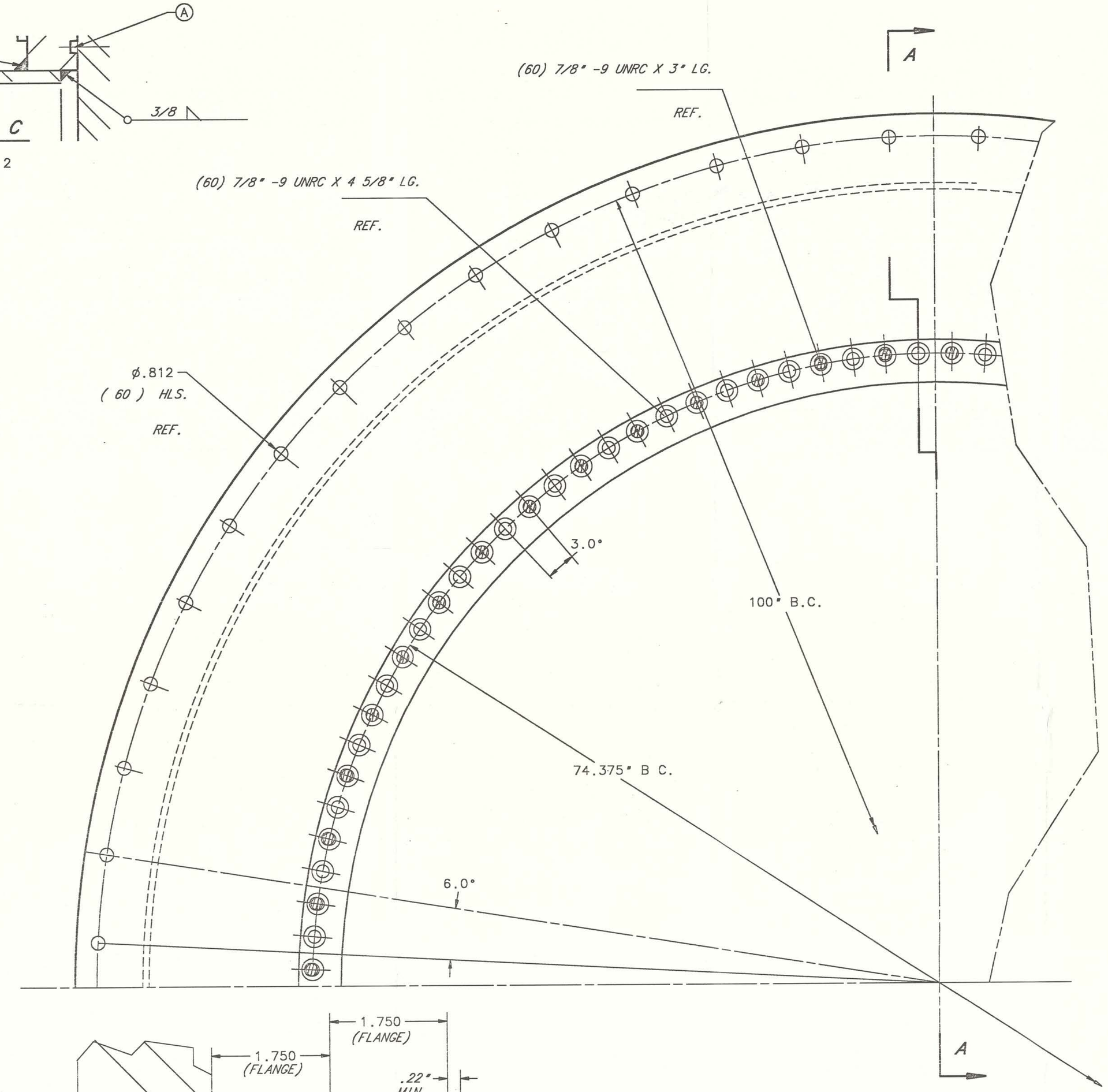

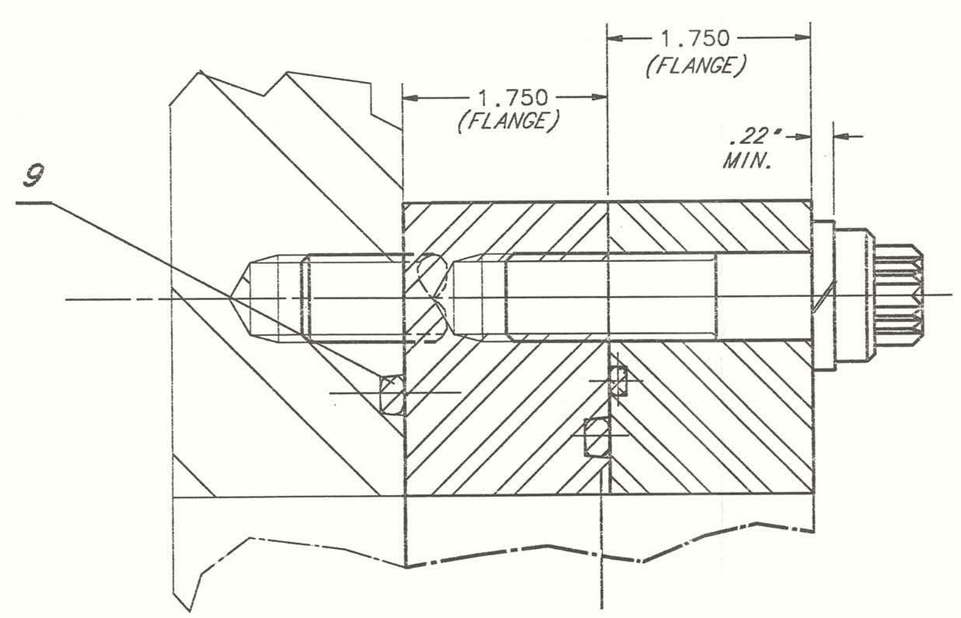

DETAIL B

SCALE 1 : 1

ITEM NO.	PART NO.	DESCRIPTION OR SIZE	QTY. REQ.
19			
18		7/8" X .18" MAX. THICK LOCK WASHER	60
17		7/8"-9 UNRC X 4 5/8" LG. FERRY CAP COUNTR-BOR SCREW	60
16			
15			
14			60
13		3/4" -10 UNC HEX. NUT	60
12		3/4" -10 UNRC X 5 1/2" LG. FERRY CAP COUNTR-BOR SCREW	60
11			
10			
9	ORANGE CORD .25"ø X228.55"	75.75"ø O-RING SEAL LG.	1
8			
7			
6			
5			
4	9220.832 MD-285394	1.8 m WINDOW ASSEMBLY	1
3	9220.832 MD-285388	102 1/2" O.D. ADAPTER FLANGE	1
2			
1	9220.832 MD-285386	94 1/2" O.D. X 3/8" WALL-VACUUM VESSEL	1

PARTS LIST

UNLESS OTHERWISE SPECIFIED			ORIGINATOR	ANDREW SZYMULANSKI	
FRACTIONS	DECIMAL	ANGLES	DRAWN	A.SZ.	X 4870
±	±	±	CHECKED		
1. BREAK ALL SHARP EDGES 1/64 MAX.			APPROVED		
2. DO NOT SCALE DWG.			USED ON		
3. DIMENSIONING IN ACCORD WITH ANSI Y14.5 STD'S					
√ MAX. ALL MACHINED SURFACES			MATERIAL-		

FERMI NATIONAL ACCELERATOR LABORATORY
UNITED STATES DEPARTMENT OF ENERGY

E-832 94 1/2"O.D.VACUUM VESSEL ASSEMBLY
NEW MUON BUILDING
R/D MECHANICAL DEPARTMENT

SCALE	DRWG SIZE	DRAWING NUMBER	REV.
1 : 4 AND AS NOTED	D	9220.832.MD-285383	

IDEAS LEVEL 4.1 USERNAME: SZYMULANSKI

CADFILE: E832DWG.

REV.	DESCRIPTION	DRAWN	DATE
		APPD.	DATE

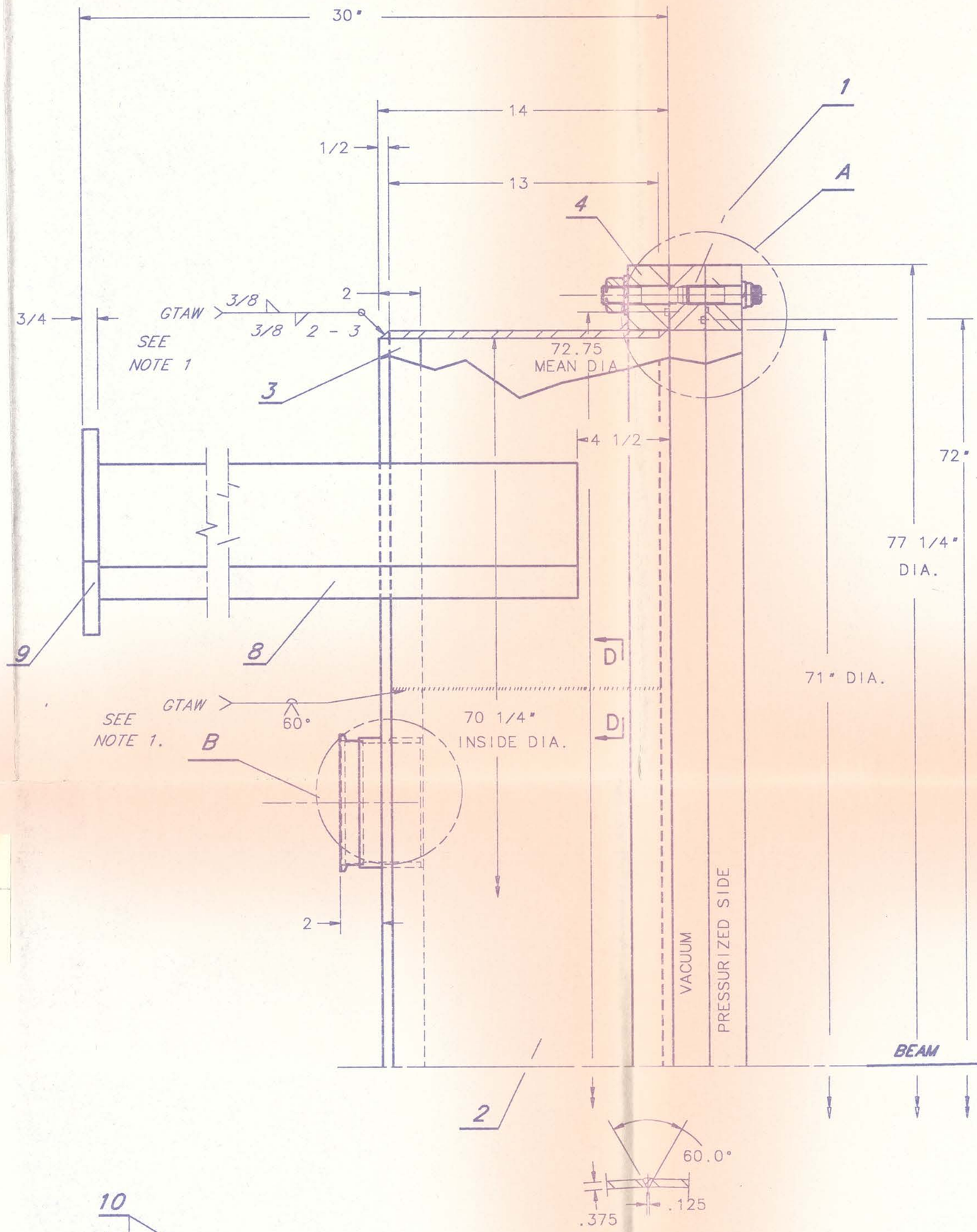

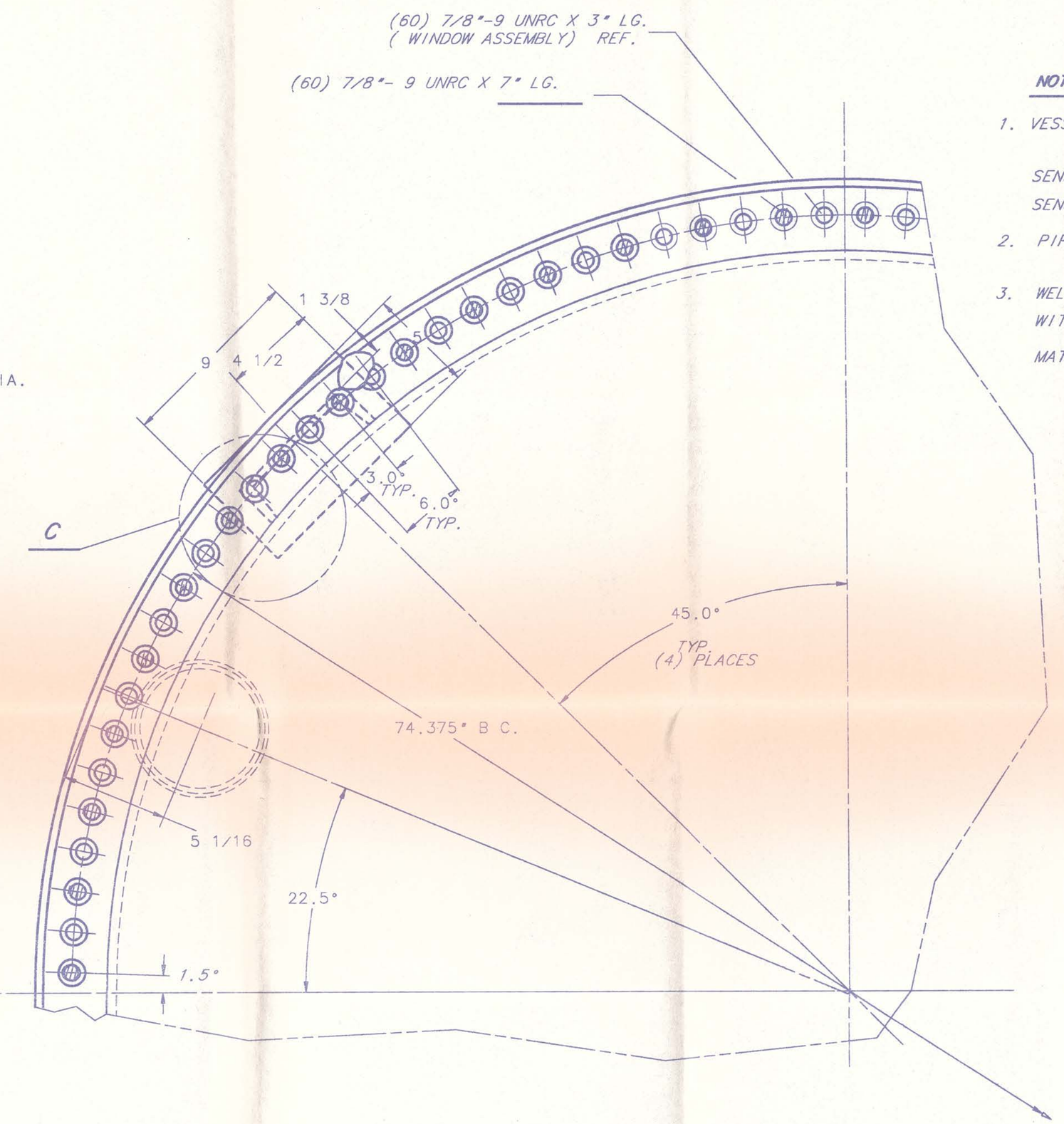

NOTES

1. VESSEL TO BE VACUUM TIGHT AND TO BE TESTED WITHOUT ITEM 1
   VACUUM TEST: NO LEAK SHALL BE DETECTABLEON THE MOST SENSITIVE SCALE OF A HELIUM DETECTOR WITH A MINIMUM SENSITIVITY OF 10^{-7} ATM. CC/SEC.
2. PIPE AND FLAT HEAD ENCLOSURE TO BE SANDBLASTED INSIDE AND OUT.
3. WELD PER FERMILAB ENG. SPECIFICATION : ES-107230 ; WITH EXCEPTION FOR BASE /WELD MATERIAL SPEC. WHICH SHOULD MATCH CARBON STEEL MATERIAL REQUIREMENTS.

ITEM NO.	PART NO.	DESCRIPTION OR SIZE	QTY. REQ.
12	ASTM A 574	7/8" - 9-UNC HEX NUT	60
11		7/8" LOCK WASHER	60
10	ASTM A 574	7/8" - 9-UNRC X 7" LG FERRY CAP COUNTER BOR SCREW	60
9	ASTM SA 36	PL 3/4" X 5" X 9"	4
8	ASTM SA 36	C7X12.25 X24 3/4" LG.	4
7	ASTM A 513 TYPE 5	TUBE 6.25" O.D. X .25" WALL X 2 15/16" LG.	1
6	0415.MB-23279	6" VACUUM SEAL QUICK DISCONNECT FLANGE	1
5	ORANGE CORD .25"ØX228.5"LG	72.75" NOMINAL DIA. O-RING SEAL	1
4	9220.832 MD-285387	VACUUM VESSEL FLANGE	1
3	ASTM SA 36	CIRCULAR FLAT HEAD 70.25 DIA. X 2" THICK	1
2	ASTM SA 36	ROLLED SHELL 71" O.D. X 3/8" WALL X 13" LG.	1
1	9220.832 MD-285394	1.8m WINDOW ASSEMBLY	1

PARTS LIST

UNLESS OTHERWISE SPECIFIED			ORIGINATOR	ANDREW SZYMULANSKI	
FRACTIONS	DECIMAL	ANGLES	DRAWN	A.SZ.	X 4870
±1/32	±	±.03	CHECKED		
1. BREAK ALL SHARP EDGES 1/64 MAX.			APPROVED		
2. DO NOT SCALE DWG.			USED ON		
3. DIMENSIONING IN ACCORD WITH ANSI Y14.5 STD'S			MATERIAL- AS NOTED		
63√ MAX. ALL MACHINED SURFACES					

FERMI NATIONAL ACCELERATOR LABORATORY
UNITED STATES DEPARTMENT OF ENERGY

1.8 m VACUUM WINDOW TEST FIXTURE
NEW MUON BUILDING
R/D MECHANICAL DEPARTMENT

SCALE	DRWG SIZE	DRAWING NUMBER	REV.
1 : 4 AND AS NOTED	D	9220.832.MD-285391	

IDEAS LEVEL 4.1 USERNAME: SZYMULANSKI
CADFILE: VWTDWG

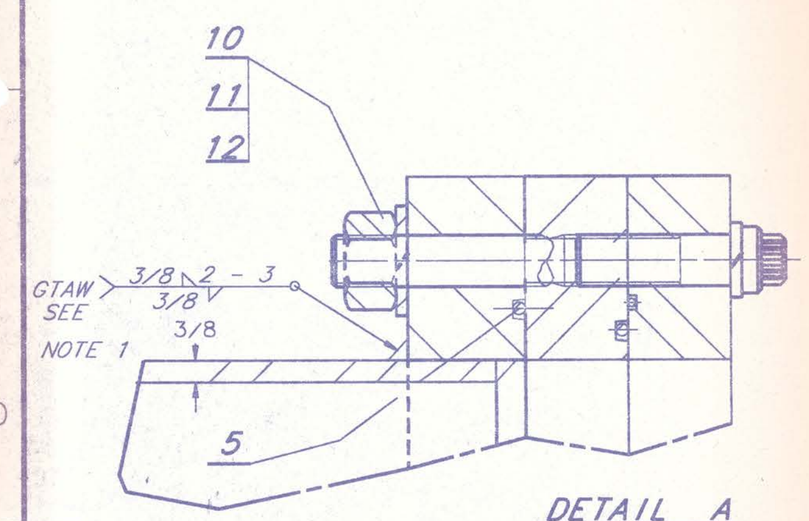

DETAIL A
SCALE 1:2

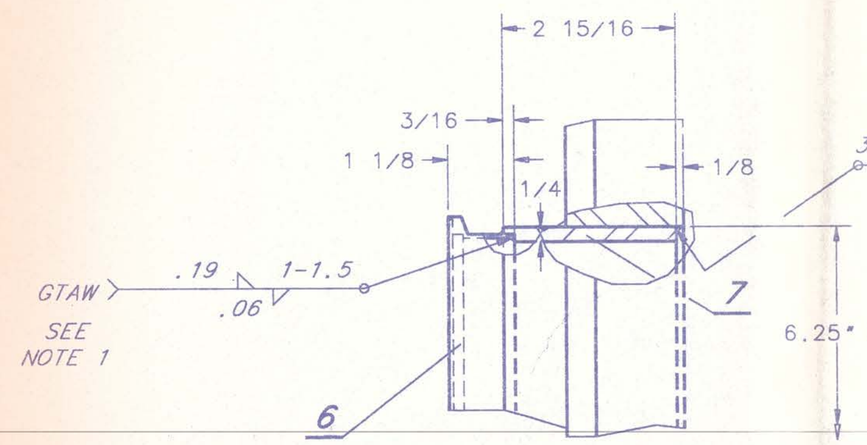

DETAIL B
SCALE 1:2

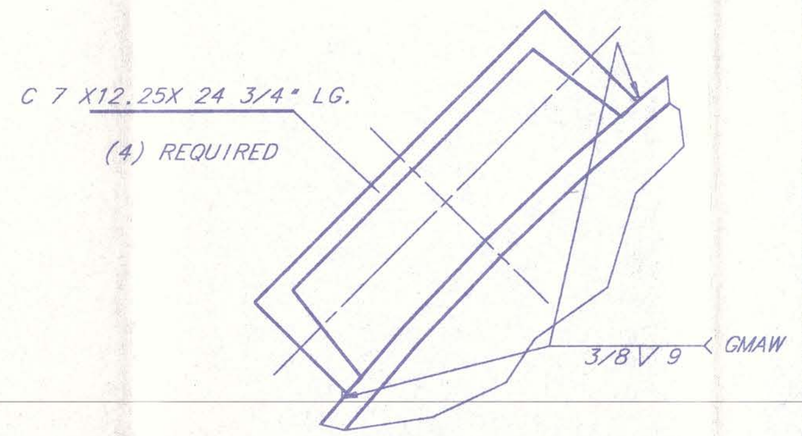

DETAIL C
SCALE 1:2

REV.	DESCRIPTION	DRAWN	DATE
		APPD.	DATE

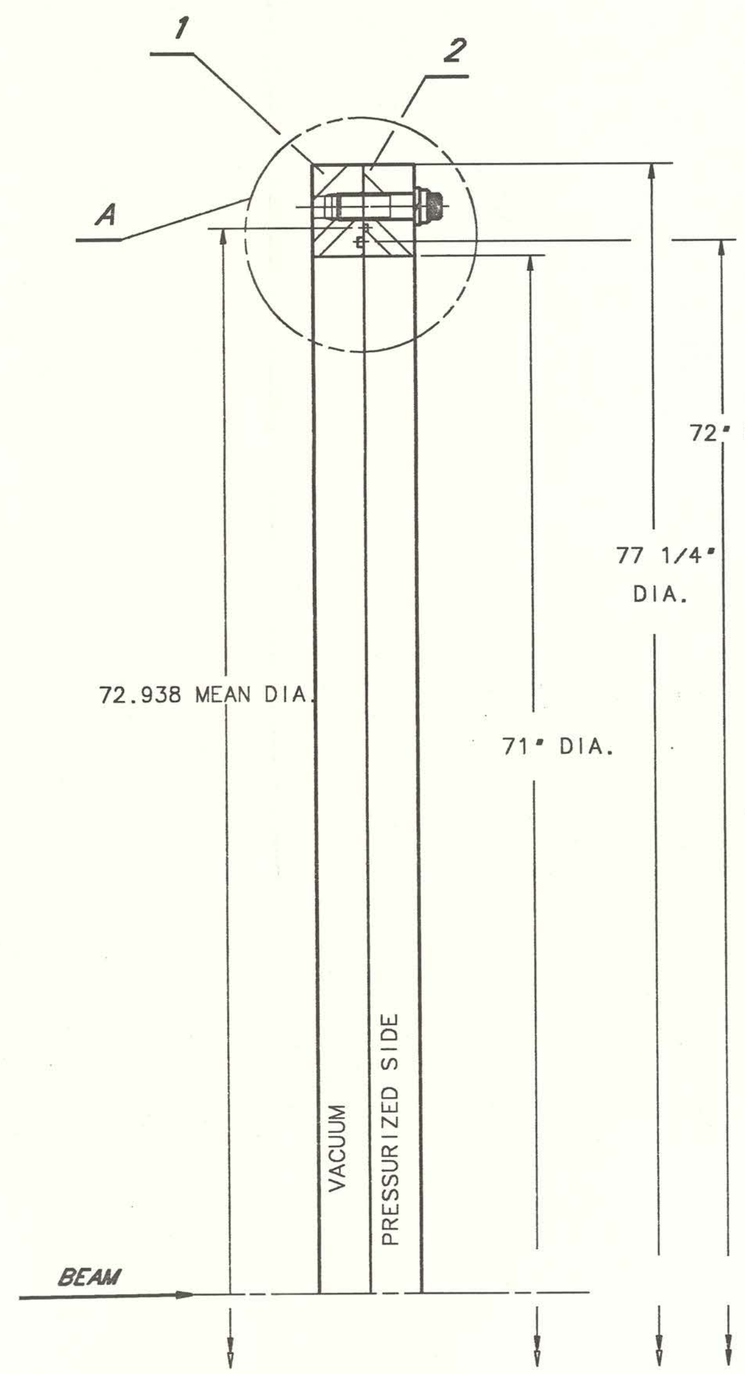

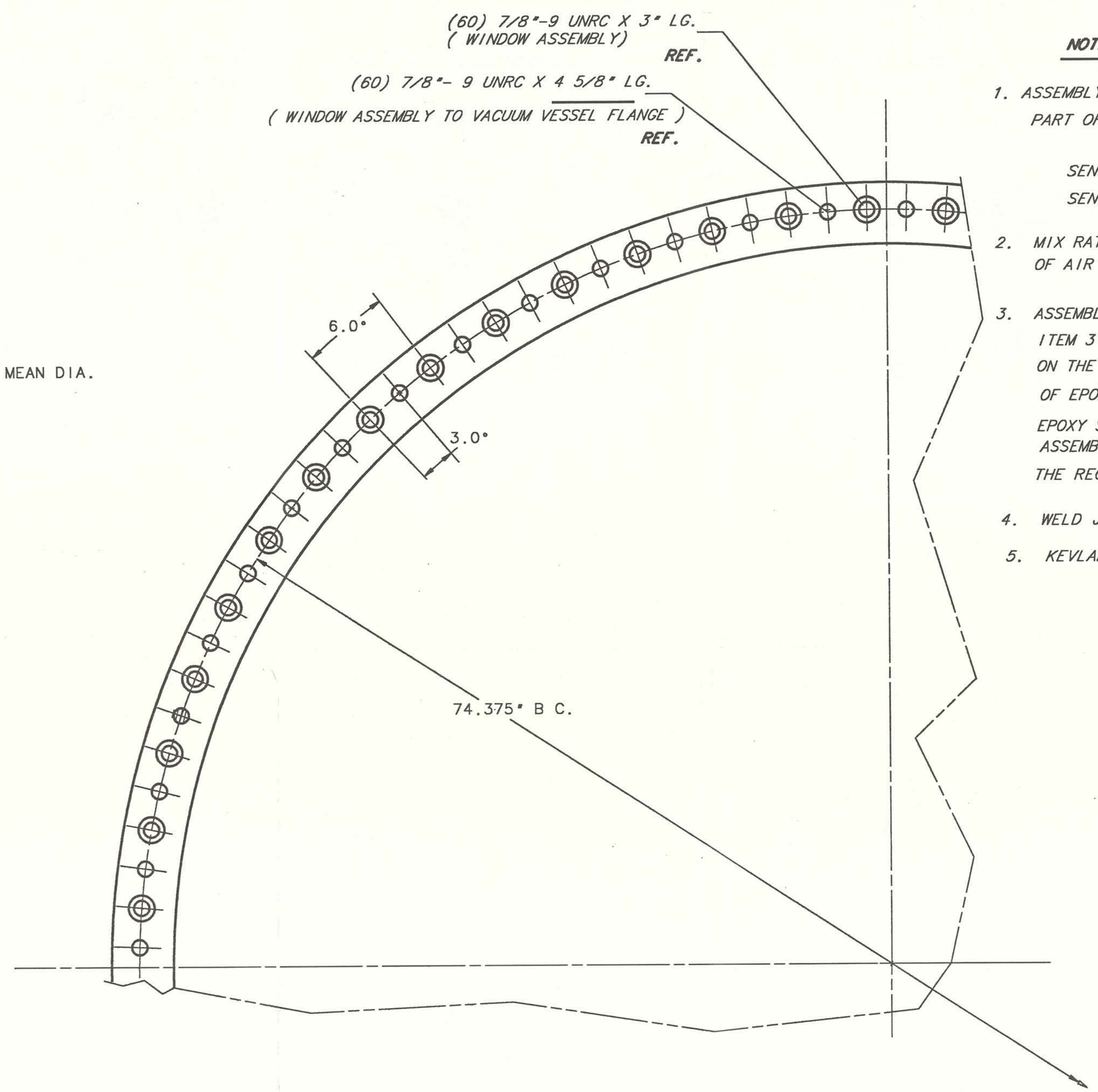

NOTES

1. ASSEMBLY TO BE VACUUM TIGHT AND TO BE TESTED AS AN INTEGRAL PART OF VACUUM WINDOW TEST FIXTURE ASSEMBLY.
   VACUUM TEST: NO LEAK SHALL BE DETECTABLE ON THE MOST SENSITIVE SCALE OF A HELIUM DETECTOR WITH A MINIMUM SENSITIVITY OF 10^{-7} ATM. CC/SEC.
2. MIX RATIO 1:1, MINIMUM BATCH 200 GRAMS; USE WHEN CLEAR AND FREE OF AIR BUBBLES.
3. ASSEMBLE O RING ITEM 4 AND MYLAR RING ITEM 8 AND KEVLAR FABRIC ITEM 3 TO ITEM 1.
   ON THE KEVLAR FABRIC, DIRECTLY OVER THE O - RING, LAY A BEAD OF EPOXY OVER THE ENTIRE DIA. OF THE O-RING; LEAVE THE EPOXY SOAK THROUGH THE KEVLAR FABRIC, BEFORE COMPLETING REMAINING ASSEMBLY.
   THE REQURED TIME FOR CURING : 24 HRS.
4. WELD JOINT AND FINISH TO BLEND MATING DIA.
5. KEVLAR FABRIC : - STYLE 735
   - MIL-C-44050 (MILITARY SPEC.)
   - 1500 DENIER , KEVLAR 29
   - 2 X 2 BASKET WEAVE
   - 35 X 34 COUNT
   - 1800 lb x 1821 lb. TENSILE STRENGTH
   - 88" WIDE ROLL

ITEM NO.	PART NO.	DESCRIPTION OR SIZE	QTY. REQ.
10		EPOXY - RESIN EPON 826 "SHELL OIL PROD " AND EM-308 (SEE NOTE 2) "THIOKOL CHEMICAL CORP." (AVAILABLE THRU TECH. SERVICE)	A/R
9		ALUMINIZED MYLAR 77 1/4" SQUARE	1
8		ALUMINIZED MYLAR RING 77 1/4" Ø / 71" Ø	1
7		7/8" LOCK WASHER	60
6		7/8"-9 UNRC X3" LG. FERRY CAP COUNTER BOR SCREW	60
5	ALUMINUM ALLOY 1100	72.94" DIA. COMPRESSION RING .188 Ø X 229.14" LG.	1
4	ORANGE CORD .25ØX226.2 LG	72"Ø O RING SEAL	1
3		KEVLAR - 29 FABRIC (SEE NOTE 5)	1
2	9220.832 MD-285390	VACUUM WINDOW DOWNSTREAM FLANGE	1
1	9220.832 MD-285389	VACUUM WINDOW UPSTREAM FLANGE	1

PARTS LIST

UNLESS OTHERWISE SPECIFIED			ORIGINATOR	ANDREW SZYMULANSKI	
FRACTIONS	DECIMAL	ANGLES	DRAWN	ANDREW SZYMULANSKI	X 4870
±	±	±	CHECKED		
			APPROVED		

1. BREAK ALL SHARP EDGES 1/64 MAX.
2. DO NOT SCALE DWG.
3. DIMENSIONING IN ACCORD WITH ANSI Y14.5 STD'S

√ MAX. ALL MACHINED SURFACES

USED ON 9220.832.MD-285391 (1)

MATERIAL- AS NOTED

FERMI NATIONAL ACCELERATOR LABORATORY
UNITED STATES DEPARTMENT OF ENERGY

1.8m WINDOW ASSEMBLY
1.8 m VACUUM WINDOW TEST FIXTURE
R/D MECHANICAL DEPARTMENT

SCALE	DRWG SIZE	DRAWING NUMBER	REV.
1 : 4 AND AS NOTED	D	9220.832.MD-285394	

IDEAS LEVEL 4.1 USERNAME: SZYMULANSKI
CADFILE: WA832DWG

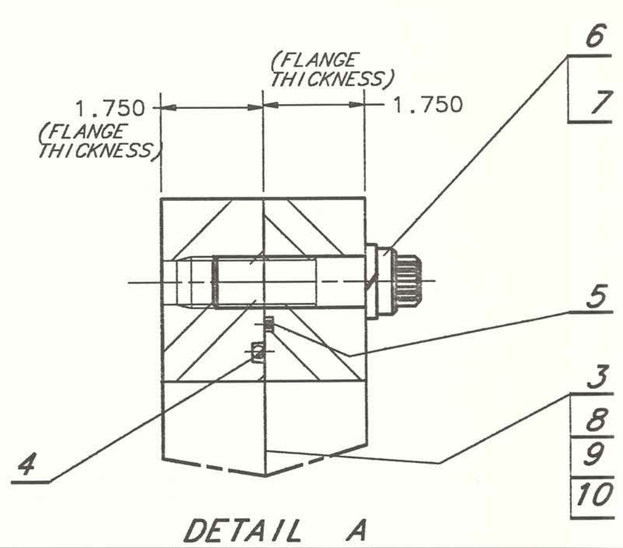

DETAIL A

SCALE 1:2

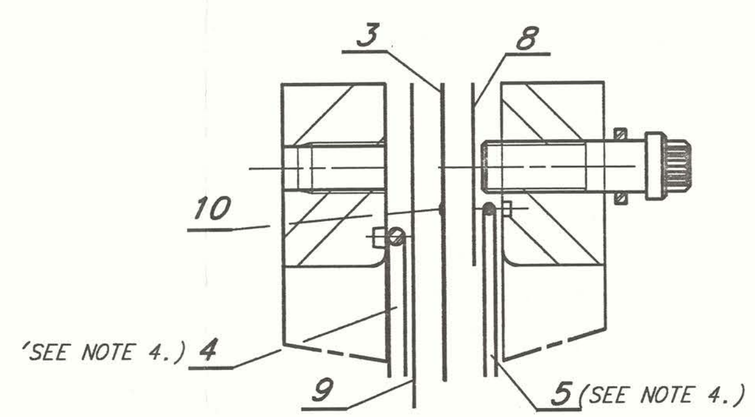

ASSEMBLY COMPONENTS
REVOLVING VIEW

REV.	DESCRIPTION	DRAWN	DATE
		APPD.	DATE

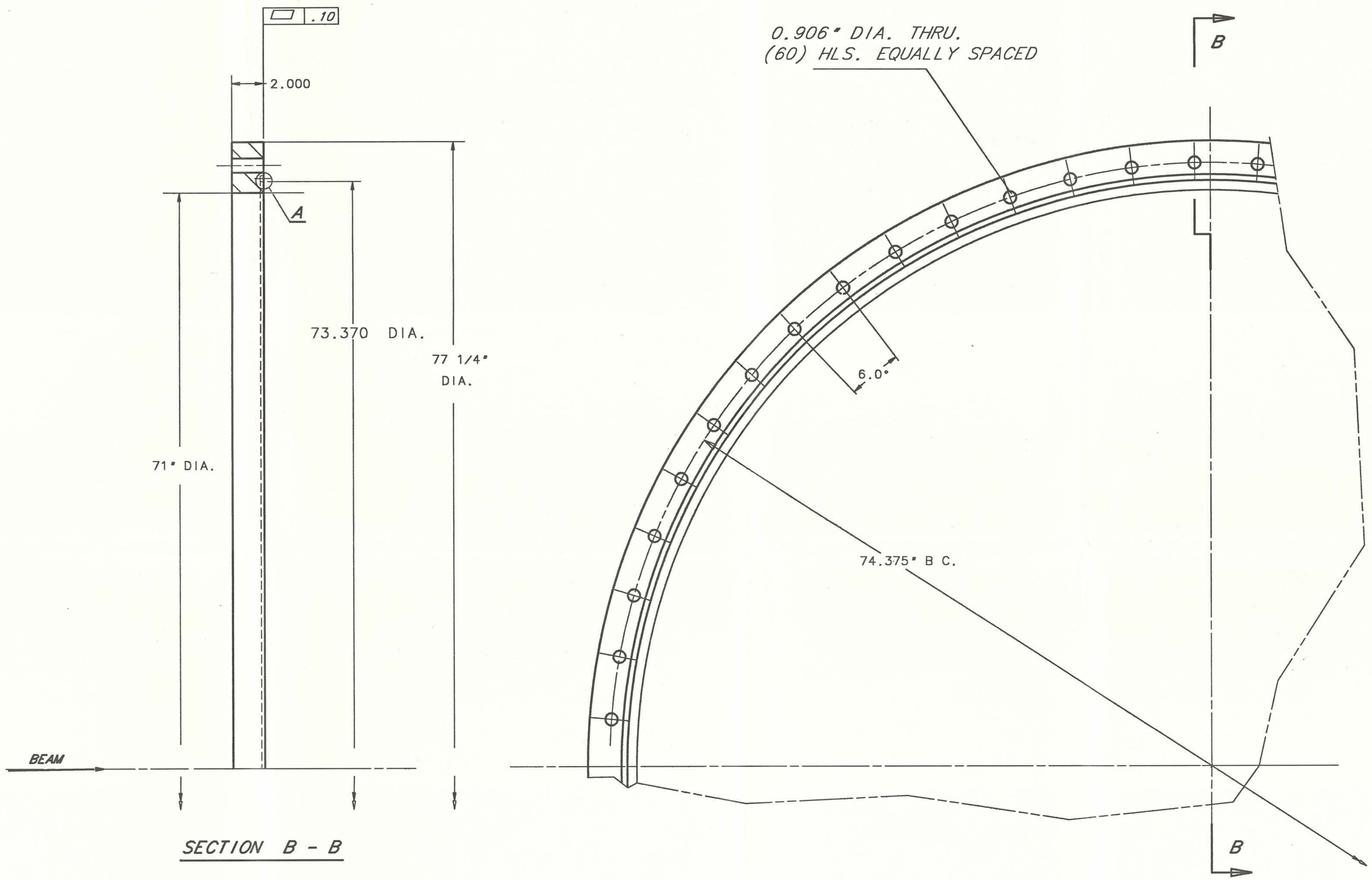

SECTION B - B

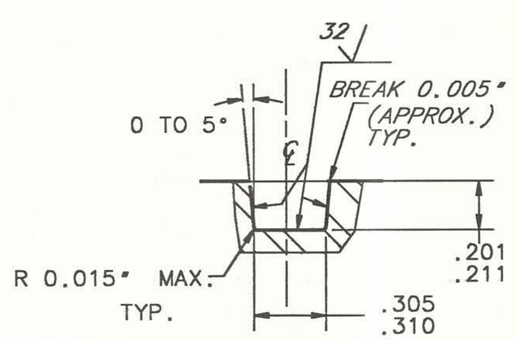

DETAIL A

SCALE 2 : 1

ITEM NO.	PART NO.	DESCRIPTION OR SIZE	QTY. REQ.

PARTS LIST

UNLESS OTHERWISE SPECIFIED		ORIGINATOR	ANDREW SZYMULANSKI
FRACTIONS	DECIMAL	ANGLES	DRAWN: ANDREW SZYMULANSKI — X 4870
±1/32	±.005	±.03	CHECKED
			APPROVED

1. BREAK ALL SHARP EDGES 1/64 MAX.
2. DO NOT SCALE DWG.
3. DIMENSIONING IN ACCORD WITH ANSI Y14.5 STD'S

63 MAX. ALL MACHINED SURFACES

USED ON 9220.832.MD-285391 (4)

MATERIAL- ASTM SPEC. NO SA 515 GRADE 70

FERMI NATIONAL ACCELERATOR LABORATORY
UNITED STATES DEPARTMENT OF ENERGY

VACUUM VESSEL FLANGE
1.8 m VACUUM WINDOW TEST FIXTURE
R/D MECHANICAL DEPARTMENT

SCALE	DRWG SIZE	DRAWING NUMBER	REV.
1 : 4 AND AS NOTED	D	9220.832.MD-285387	

IDEAS LEVEL 4.1 — USERNAME: SZYMULANSKI

CADFILE: VVFL832DWG

REV.	DESCRIPTION	DRAWN	DATE
		APPD.	DATE

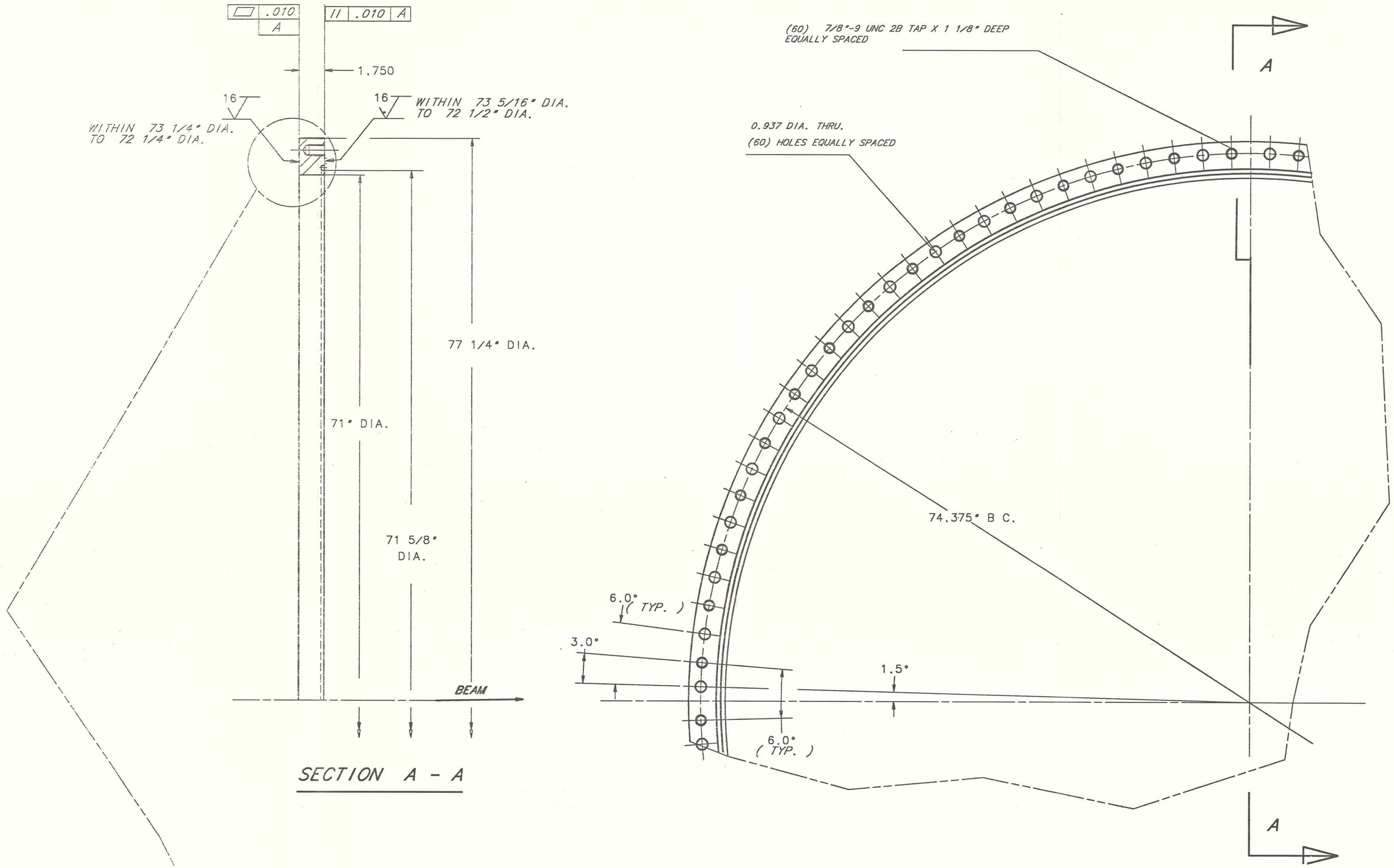

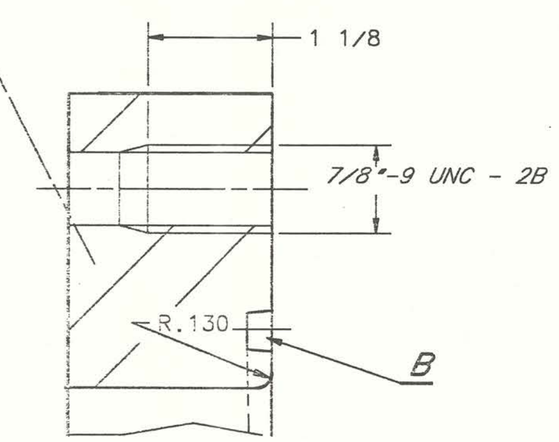

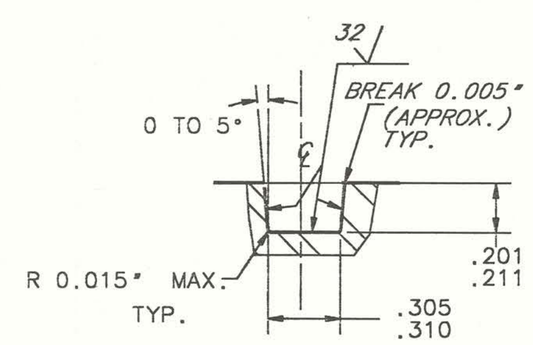

DETAIL B

SCALE 2 : 1

ITEM NO.	PART NO.	DESCRIPTION OR SIZE	QTY. REQ.
1			

PARTS LIST

UNLESS OTHERWISE SPECIFIED			ORIGINATOR	ANDREW SZYMULANSKI	
FRACTIONS	DECIMAL	ANGLES	DRAWN	A.SZ.	X 4870
±1/32	±.005	±.03°	CHECKED		
			APPROVED		

1. BREAK ALL SHARP EDGES 1/64 MAX.
2. DO NOT SCALE DWG.
3. DIMENSIONING IN ACCORD WITH ANSI Y14.5 STD'S

63 MAX. ALL MACHINED SURFACES

USED ON 9220.832.MD-285394 (1)

MATERIAL- ASTM SPEC. NO. : SA 515 GRADE 70

FERMI NATIONAL ACCELERATOR LABORATORY
UNITED STATES DEPARTMENT OF ENERGY

VACUUM WINDOW UPSTREAM FLANGE
1.8 m WINDOW ASSEMBLY
R/D MECHANICAL DEPARTMENT

SCALE	DRWG SIZE	DRAWING NUMBER	REV.
1 : 4 AND AS NOTED	D	9220.832.MD-285389	

IDEAS LEVEL 4.1 USERNAME: SZYMULANSKI

CADFILE: FLANUP832DWG.

REV.	DESCRIPTION	DRAWN	DATE
		APPD.	DATE

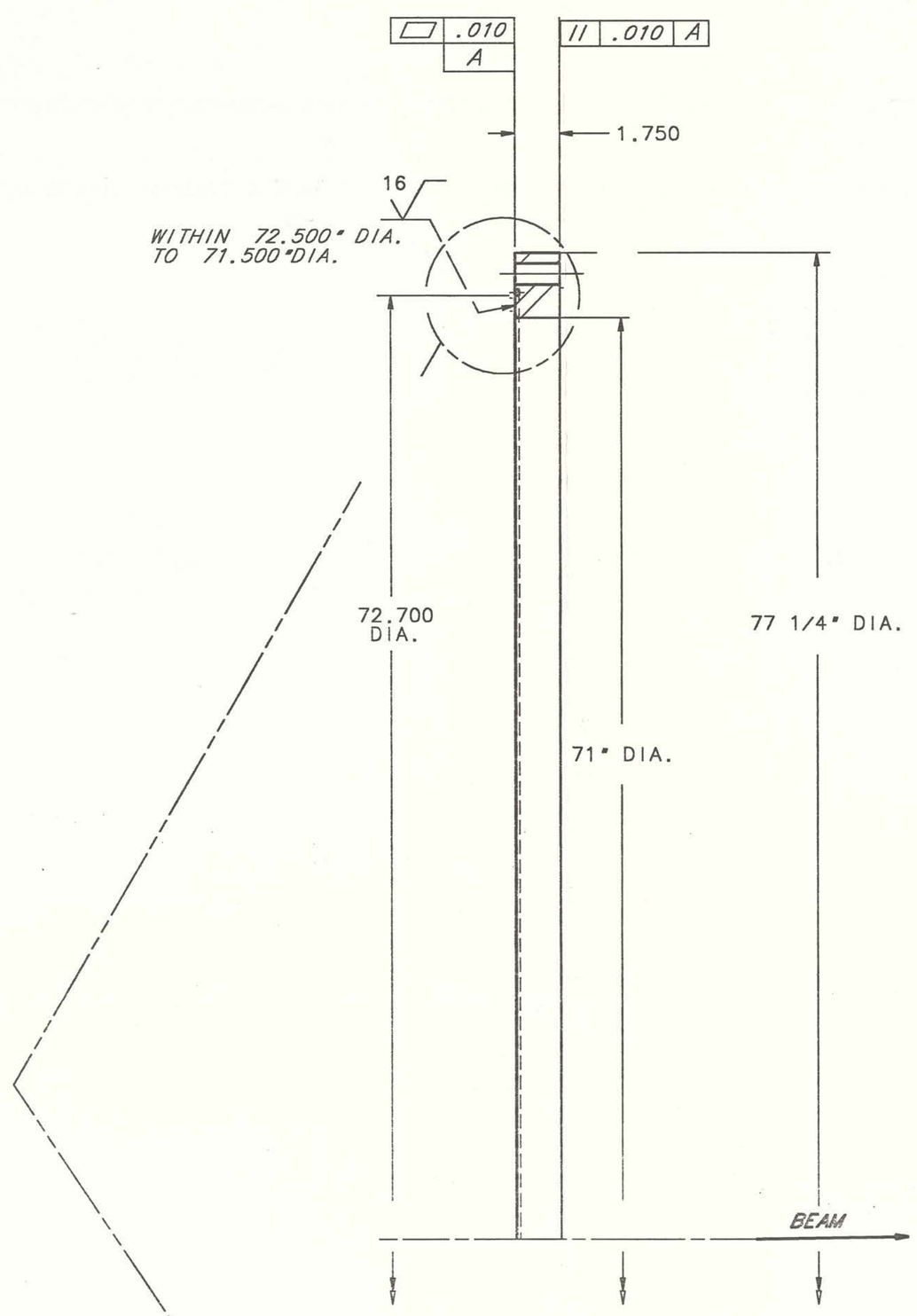

SECTION A - A

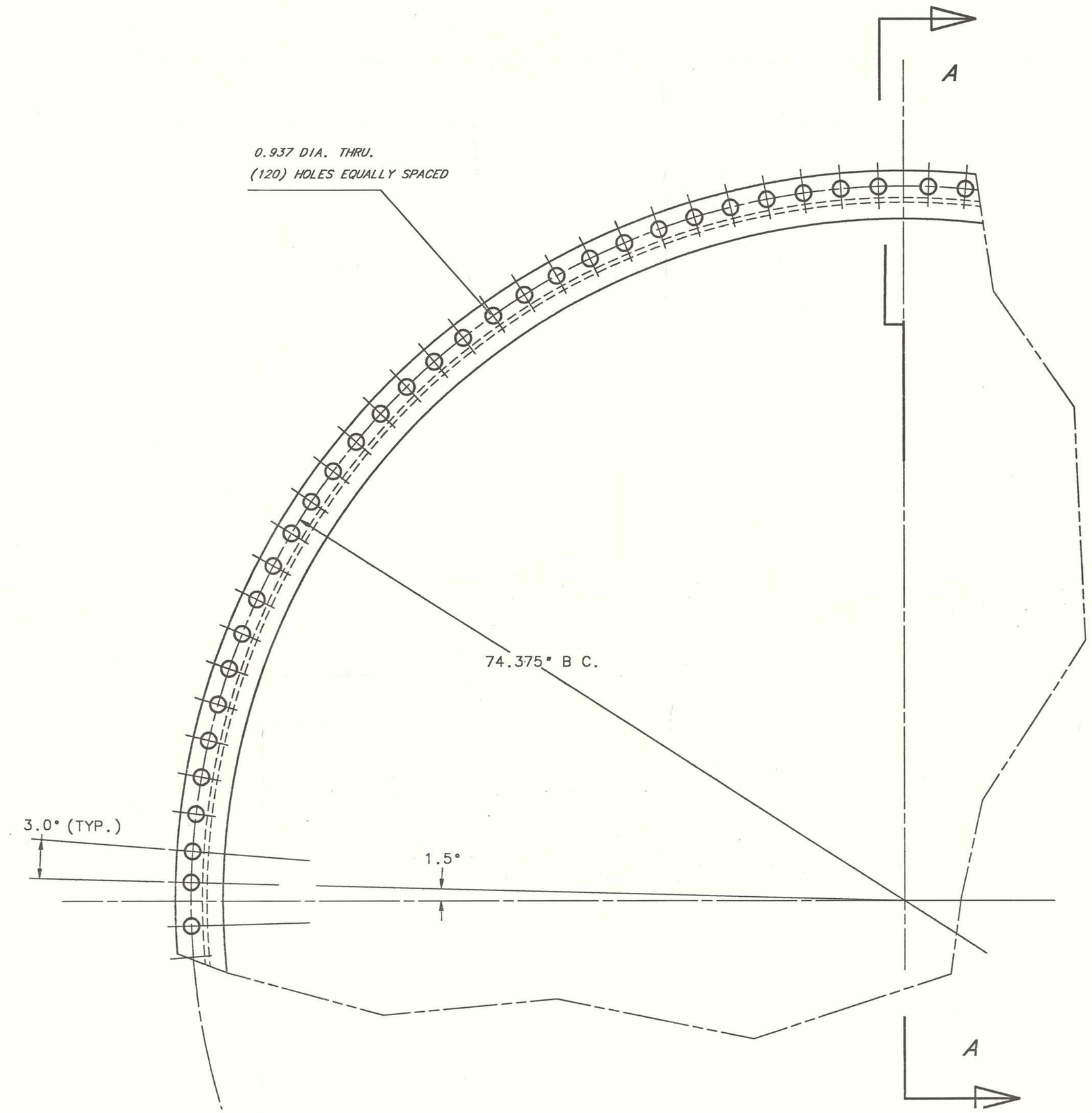

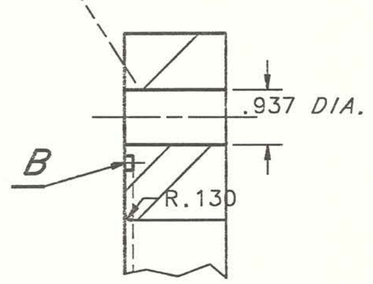

SCALE 1: 2

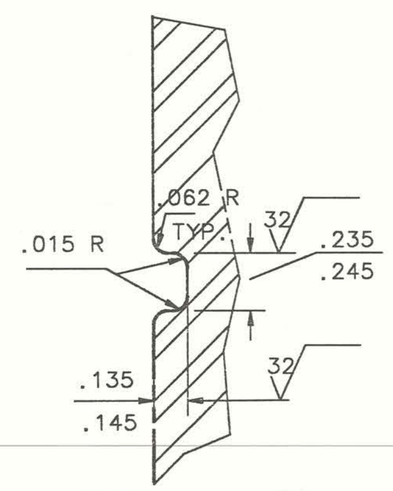

DETAIL B

SCALE 2 : 1

ITEM NO.	PART NO.	DESCRIPTION OR SIZE	QTY. REQ.
1			

PARTS LIST

UNLESS OTHERWISE SPECIFIED			ORIGINATOR	ANDREW SZYMULANSKI	
FRACTIONS	DECIMAL	ANGLES	DRAWN	A.SZ.	X 4870
±1/32	±.005	±.03°	CHECKED		
			APPROVED		

1. BREAK ALL SHARP EDGES 1/64 MAX.
2. DO NOT SCALE DWG.
3. DIMENSIONING IN ACCORD WITH ANSI Y14.5 STD'S

63 MAX. ALL MACHINED SURFACES

USED ON 9220.832.MD-285394 (2)

MATERIAL- ASTM SPEC. NO. : SA 515 GRADE 70

FERMI NATIONAL ACCELERATOR LABORATORY
UNITED STATES DEPARTMENT OF ENERGY

VACUUM WINDOW DOWNSTREAM FLANGE
1.8 m WINDOW ASSEMBLY
R/D MECHANICAL DEPARTMENT

SCALE	DRWG SIZE	DRAWING NUMBER	REV.
1 : 4 AND AS NOTED	D	9220.832.MD-285390	

IDEAS LEVEL 4.1 USERNAME: SZYMULANSKI

CADFILE: FLDOWN832DWG.

19. REFERENCES

1. ASME BOILER AND PRESSURE VESSEL CODE
   SECTION VIII - DIVISION 1

2. FORMULAS FOR STRESS AND STRAIN
   FIFTH EDITION
   BY R.J. ROARK
   AND W.C. YOUNG

3. PRESSURE VESSEL DESIGN
   HANDBOOK
   SECOND EDITION
   HENRY H. BEDNAR , P.E.

4. PRESSURE VESSEL HANDBOOK
   SECOND EDITION
   EUGENE F. MEGYESY

5. MECHANICS FOR ENGINEERS
   THIRD EDITION

   F.P BEER/ E.R JOHNSTON , JR.

19. REFERENCES

1. ASME BOILER AND PRESSURE VESSEL CODE
   SECTION VIII - DIVISION 1

2. FORMULAS FOR STRESS AND STRAIN
   FIFTH EDITION
   BY R.J. ROARK
   AND W.C. YOUNG

3. PRESSURE VESSEL DESIGN
   HANDBOOK
   SECOND EDITION
   HENRY H. BEDNAR , P.E.

4. PRESSURE VESSEL HANDBOOK
   SECOND EDITION
   EUGENE F. MEGYESY

5. MECHANICS FOR ENGINEERS
   THIRD EDITION

   F.P BEER/ E.R JOHNSTON , JR.