Fermilab

Particle Physics Division

Mechanical Department Engineering Note

Number: MD-ENG-525 Date: August 6, 2014

Project: MicroBooNE

Project Internal Reference:

Title: Engineering Note for Cryostat relief valve support

Author(s): Jim Kilmer

Reviewer(s): Dave Poshka 8/8/2014

Key Words:

Abstract/Summary:

This note describes the MicroBooNE main relief valve support structure. Part of it can be used as a lifting fixture and hence was designed according to ASME lifting fixture standards.

Applicable Codes:

AISC Manual of Steel Construction, Ninth Edition

ASME BTH-1-2011, Design of Below-the-Hook Lifting Devices

ASME B 30.20-2013, Below-the-Hook Lifting Devices

USS Steel Design Manual, R. L. Brockenbrough and B. G. Johnston, United State Steel Corporation, 1968.

Strength of Materials, Robert W. Fitzgerald, Addison-Wesley Publishing, 1967.

Roark's Formulas for Stress & Strain, Warren C. Young, McGraw-Hill Book Company, Sixth Edition, 1989.

Introduction to Fluid Mechanics, Robert W. Fox and Alan T. McDonald, John Wiley and Sons, Third Edition, 1985.

Cryostat Relief Valve Support Engineering Note
James Kilmer
May 16, 2014

The MicroBooNE cryostat has a tandem relief valve system with matched inlet and outlet valves allowing switching reliefs by turning one shaft. This system weighs about 1820 pounds. The cryostat vessel is not strong enough to support the valve on the vessel nozzle alone. A support assembly was designed to transfer this weight to the intermediate platform framing. The support also must accomodate shrinking of the vessel height on cooldown and additional shrinkage of the vent nozzle when the relief actually opens. Finally this support must deal with the reaction forces put on the valves when one of them opens.

The design is shown in drawings 3974-MD-497430 sheets 1&2. The upper section of the support is also used as a lifting fixture to pick the relief valve system up and mount it. As such it must meet the requirements of ASME B30.20-2013 and BTH-1-2011.

PART 1
UPPER SUPPORT SECTION, a lifting fixture

In ASME BTH-1, Design of Below-the-Hook Lifting Devices, the lifting fixtures are designed according to categories and service class. This fixture is suitable for Design Category A and Service Class 0. The fixture is purpose built for only the load of the tandem relief valve system and will be used less than a dozen times. Hence there is no possibility to overload the lifter and it's usage will be very low. This would allow a nominal design factor of 2.0, but chose an Nd of 3.00 anyway as the traditional design factor. The entire structure is made from 4" by 4" by 0.25" structural square tubing having a maximum yield stress of 46,000 psi. For the square tube:

$N_d := 3.0$ $\quad F_y := 46000 \cdot \frac{lbf}{in^2}$ $\quad E := 29000000 \cdot psi$ $\quad psi := \frac{lbf}{in^2}$

$A := 3.59 \cdot in^2$ $\quad I := 8.22 \cdot in^4$ $\quad S := 4.11 \cdot in^3$

$r := 1.51 \cdot in$ $\quad J := 13.5 \cdot in^4$ $\quad Z := 4.97 \cdot in^3$

$F_t := \frac{F_y}{N_d} = 1.533 \times 10^4 \cdot psi$ Allowable maximum tensile stress per BTH-1

Calculate the allowable compression stress.

$$C_c := \sqrt{\frac{2 \cdot \pi^2 \cdot E}{F_y}} = 111.554$$

For this system define K as 1.0. The structure is very stiff in the line of action of the relief valve and guided in the other direction by the upper structure (as a brace).

.

$K := 1.0$ $\qquad$ $l := 42 \cdot in$

$$\frac{K \cdot l}{r} = 27.815$$

Since Kl/r is less that Cc use the following equation for Fa.

$$F_a := \frac{\left[1 - \frac{\left(\frac{K \cdot l}{r}\right)^2}{2 \cdot C_c^{\,2}}\right] \cdot F_y}{N_d \cdot \left[1 + 9 \cdot \frac{\left(\frac{K \cdot l}{r}\right)}{40 \cdot C_c} - 3 \cdot \frac{\left(\frac{K \cdot l}{r}\right)^3}{40 \cdot C_c^{\,3}}\right]}$$

Allowable Compressive stress

$F_a = 1.408 \times 10^4 \cdot psi$ $\qquad$ Per BTH-1

For an allowable bending stress first determine if the square tube is a compact section.

$b := 4 \cdot in$ Section width $\qquad$ $t := .25 \cdot in$ Section thickness

$$\frac{b}{t} = 16$$

$$1.12 \cdot \sqrt{\frac{E}{F_y}} = 28.121$$

From Table3-1 on page 18 of ASME BTH-1-2011 the 4 inch square tube is a compact section.
Then using equation3-6 on page17:

$$F_b := \frac{1.10 \cdot F_y}{N_d} = 1.687 \times 10^4 \cdot psi$$

Allowable Bending Stress per BTH-1

To use this number the bending member must have an unbraced length less than:

$$L_p := \frac{0.13 \cdot r \cdot E}{F_y \cdot Z} \cdot \sqrt{J \cdot A}$$

$L_p = 173.348 \cdot in$ $\qquad$ There are no members this long in the relief valve support.

The upper section lifting fixture is shown in drawing 3974.110-MD-497421, sheets 1 and 2. The relief valve system weighs approximately 1820 pounds. The valves are supported in three places by turnbuckles linked to the lifting fixture. Assume that the three support turnbuckles equally support the load or 607 pounds each.

Tube number 4 on the drawing supports two of the support points. The tube is in bending and is loaded in an eccentric fashion. The load of 2/3 of the valve weight is attached on a flange welded to one side of the tube and on the other side is the lifting bar the entire weight of the valve and fixture is loaded on.

$P1 := 4 \cdot 607 \cdot lbf$ $\quad T := P1 \cdot 2 \cdot in$ $\quad b := 4 \cdot in$ $\quad t := \frac{1}{4} in$

From page 158 of the <u>USS Steel Design Manual</u> the torsional stress in the tube is calculated.

$$f_s := \frac{T}{2 \cdot b^2 \cdot t}$$

$$f_s = 607 \cdot psi$$

This shear stress is fine for the tube.

For bending of part 4 consider the Case 10 from page 2-299 of the AISC code. For the stress calculation ignore the strength of the bar (part 8).

$a := 18 \cdot in$ $\quad b := 12 \cdot in$ $\quad l := 42.5 \cdot in$ $\quad P := 607 \cdot lbf$

$$R_1 := \frac{P}{l} \cdot (l - a + b) \qquad R_2 := \frac{P}{l} \cdot (l - b + a)$$

$$R_1 = 521.306 \cdot lbf \qquad R_2 = 692.694 \cdot lbf$$

$$M_{max} := R_1 \cdot a = 9.384 \times 10^3 \cdot in \cdot lbf$$

$$f_b := \frac{M_{max}}{S} = 2.283 \times 10^3 \cdot psi$$

This is well below the bending stress allowed as calculated above so this tube is OK. For the allowable shear stress use 1/3 of the allowable tensile stress and then calculate a combined stress for part 4.

$$\frac{f_s}{\frac{F_t}{3}} + \frac{f_b}{F_b} = 0.254$$ Part 4 is OK because this ratio is less than 1

Now look at the welds on each end of part 4.

$$Torque_{part4} := T = 4.856 \times 10^3 \cdot lbf \cdot in$$

This torque is seen at each end of part 4. It is resisted by the end welds in shear. Assume that the torque is applied at the plane through the welds on each end of the tube.. This case is shown on page 276-277of Strength of Materials by Robert W. Fitzgerald. The plane is at a 15 degree angle to the end of the 4" by 4" tube. Since the torque is centered on the tube also calculate the polar moment of inertia at the same point.

$$l_c := \frac{4 \cdot in}{\cos(.262)} = 4.141 \cdot in$$ Length of the cut edge of the tube

The welds on these parts are 3/16 inch bevel goove welds all around the tube.

From the reference above the J of each of the four welds around the joint is given by

$$t := \frac{3}{16} \cdot in \qquad i := 0 .. 3$$

$x_i :=$

$2.0 \cdot in$
$0 \cdot in$
$2.0 \cdot in$
$0 \cdot in$

$y_i :=$

$0 \cdot in$
$2.07 \cdot in$
$0 \cdot in$
$2.07 \cdot in$

$$L := \begin{pmatrix} 4.14in \\ 4in \\ 4.14in \\ 4in \end{pmatrix} \qquad x := \begin{pmatrix} 2 \\ 0 \\ 2 \\ 0 \end{pmatrix} in \qquad y := \begin{pmatrix} 0 \\ 2.07 \\ 0 \\ 2.07 \end{pmatrix} in$$

$$J_i := \frac{1}{12} \cdot t \cdot (L)^3 + t \cdot L \cdot \left[(x)^2 + (y)^2\right] = \begin{pmatrix} 13.746 \\ 13.637 \\ 13.746 \\ 13.637 \end{pmatrix} \cdot in^4$$

$J := \sum J_i = 54.767 \cdot in^4$ Total Polar Moment of Inertia for four welds

Now find the stress at the middle of the short welds which are the farthest from the centroid of the welds

$R := 2.07 \cdot in$ Distance from the torque to the weld centroid

$M := Torque_{part4}$

$Stress_{shear} := \frac{M \cdot R}{J}$

$Stress_{shear} = 183.54 \cdot psi$

This stress is no problem for welds done with E70 rod.

Find the stress on the welds holding the plate (part 8) to part 4. This weld is held on by five 3/16" bevel groove welds on top and 4' fillet welds on each side. Assume that the fillet welds do nothing and all of the force is held by the bevel goove welds.

$l_w := 2 \cdot in \cdot 5$ $t_w := \frac{3}{16} \cdot in$ $A_w := l_w \cdot t_w = 1.875 \cdot in^2$

$\sigma_w := \frac{2 \cdot 607 \cdot lbf}{A_w} = 647.467 \cdot psi$ This weld in shear is OK.

Next look at the tear-out in the plate from the turnbuckle pins. The tear-out of an individual pin is bounded by the inset distance of the hole on each side multiplied by the plate thickness.

$t_p := .375 \cdot in$ $d_h := 1 \cdot in$

$Fshear := 36000 \cdot psi \cdot 0.4 = 1.44 \times 10^4 \cdot psi$ Allowable shear for A-36 plate

$f_{shole} := \frac{607 \cdot lbf}{2 \cdot t_p \cdot d_h} = 809.333 \cdot psi$ This shear is fine for an A-36 plate

Used as a lifting fixture for the valve set the next important part is the middle bar (part 7). That bar carries all of the load from a top hole and carries the last 1/3 of the weight of the valve set by a hole in the bottom attached to a third turnbuckle. First look at the stress on the weld to part 4. For a load assume that this weld holds 2/3 of the valve set and the whole 185 pounds of the lifting fixture. The weld on the end to part 4 is made from two 3/16 inch fillet welds, one on each side of the bar.

$P_{weldpart7} := 2 \cdot 607 \cdot lbf + 185 \cdot lbf = 1.399 \times 10^3 \cdot lbf$

$t_{weldpart7} := \frac{3}{16} \cdot in \cdot .707 = 0.133 \cdot in$ $\qquad$ $l_{weldpart7} := 2 \cdot 4 \cdot in$

$\sigma weldpart7 := \frac{P_{weldpart7}}{t_{weldpart7} \cdot l_{weldpart7}} = 1.319 \times 10^3 \cdot psi$ This shear stress is fine for E70 weld rod

Next calculate tear-out stress for the 1/2" hole carrying the last 1/3 of the weight of the valve set.

$A_{tear} := 2 \cdot 0.5 \cdot in \cdot 0.5 \cdot in = 0.5 \cdot in^2$

$Load := 607 \cdot lbf$

$\sigma tear := \frac{Load}{A_{tear}} = 1.214 \times 10^3 \cdot psi$ $\qquad$ This shear load is OK for A-36 plate

Look at the shear in the upper hole on the bar (part 7).

$P_{total} := 1820 \cdot lbf + 185 \cdot lbf = 2.005 \times 10^3 \cdot lbf$ $\qquad$ Total weight of valve set and fixture.

$Atearout := 2 \cdot 0.75 \cdot in \cdot 0.5 \cdot in = 0.75 \cdot in^2$ $\qquad$ Tearout area on hole

$A_{teartop} := \frac{P_{total}}{Atearout} = 2.673 \times 10^3 \cdot psi$ $\qquad$ This shear load is still OK for an A-36 bar.

For this frame as a lifting fixture the last thing to look at is the bending stress in the bar (part 7). Assume that the part of the bar with the row of holes does nothing for the moment of Inertiaof the bar.

$b := (6.0 - .75 - .625) \cdot in$ $\qquad$ $t := 0.625 \cdot in$

$I := \frac{1}{12} \cdot t \cdot b^3 = 5.153 \cdot in^4$

The model for this is case 8 on page 2-298of the AISC code. The total distance between supports for the valve set is 25 inches and the forces are basically 2/3 on one end and 1/3 on the other. To get the moment move the load to a point at 1/3 of the distance from the heavy end and assume that the weight of the fixture is small enough that it doesn't influence the position of the load.

$\frac{25 \cdot in}{3} = 8.333 \cdot in$ $\qquad$ Set the load at 8.33 inches from the heavy load or approximately four inches into the bar from the end welded to the tube.

Then $M_{max} := \frac{P_{total} \cdot 8 \cdot in \cdot 17 \cdot in}{25 \cdot in} = 1.091 \times 10^4 \cdot in \cdot lbf$

$\sigma_{bend} := \frac{M_{max} \cdot \frac{b}{2}}{I} = 4.895 \times 10^3 \cdot psi$ This is below the Fb calculated aaccording the BTH-1 so the bar is OK for this bending load.

This concludes the calculations that show that the upper frame is designed in accordance with ASME B30.20-2013 and ASME BTH -1-2011 for a below the hook lifting fixture. There are several members that still have to be documented to show that the frame will also hold the valve set properly and support them in service on the lower stand.

Part 7 is welded to tubes 5 and 6 which transfers the front load out to the spring supports. These welds are in shear and carry the front 1/3 of the valve.

$l_{weld} := 2 \cdot 3 \cdot 4in = 24 \cdot in$ $t_w := \frac{3}{16} \cdot in \cdot .707 = 0.133 \cdot in$

$\sigma Shear56 := \frac{607 \cdot lbf}{l_{weld} \cdot t_w} = 190.791 \cdot psi$ This weld is also fine for E70 rod.

The welds at the other end of parts 5 and 6 are resisting a moment. To model the case assume that only the upper and lower welds are involves and the side welds do nothing. Then the bottom weld is only a pivot point and the upper weld takes all of the moment. Also assume that the moment is held by only one part at a time as a cantilever.

Part 5

$L := 18.36 \cdot in$ $P := 607 \cdot lbf$ $M := L \cdot P$

The upper weld is a 3/16 inch bevel groove weld.

$A_{weld} := 4 \cdot in \cdot \frac{3}{16} \cdot in = 0.75 \cdot in^2$

$Force_{weld} := \frac{M}{4 \cdot in}$ Force on the upper groove weld

$\sigma_{grooveweld} := \frac{Force_{weld}}{A_{weld}} = 3.715 \times 10^3 \cdot psi$

This weld is OK with this level of stress. Note that the same stress would be on the bottom weld if the force is reversed and the valve load was carried by the tubesout to the spring supports sitting on the lower frame.
Thus the upper frame can serve as the lifting fixture to pick up the valve set and can also hold the valve seet when it is setting on the bottom frame.

PART 2
The Bottom Frame

The bottom frame carries the load of the relief valve set out to the main framing members of the Intermediate deck. The fiberglass decking material is not required to carry as a span any of the load of the relief valve set.

For the support columns using the AISC Manual of Steel Construction, page 3-43 for columns 42 inches tall using a KL of four feet gives an allowable concentric load for the tubes of 89 kips. This far exceeds the load total of 2005 pounds for the valves and upper frame weight.

Next make sure the two members (part 1 of drawing MD-497417) do cary the load across to the main beams of the intermediate deck. Assume that each of the columns can carry a quarter of the load plus 20% or 600 pounds. Use Case 10, page 2-299 for a simple beam with two equal concentrated loads placed unsymetrically.

$P := 600 \cdot lbf$

$l := 79.06 \cdot in$ $\quad a := 14.37 \cdot in$ These dimensions are for thebeam at the top of the plan view on the drawing.

$b := l - a - 22.5in = 42.19 \cdot in$

$R_1 := \frac{P}{l} \cdot (l - a + b) = 811.131 \cdot lbf$

$R_2 := \frac{P}{l} \cdot (l - b + a) = 388.869 \cdot lbf$

$M1 := R_1 \cdot a = 1.166 \times 10^4 \cdot in \cdot lbf$ Maximum moment in the beam

$\sigma_{bend} := \frac{M1}{S} = 2.836 \times 10^3 \cdot psi$

The maximum allowable bending stress for a tube is .66 times 46 ksi or 30.66 ksi. The beam is not over stressed. The deflection is not given in this AISC case. In Roark's Formulas for Stress and Strain, on page 101there is a formula for deflection of one load on a simply supported beam. Using that formula by combining the two load of the columns into one load at the center between the two columns should be a worst case deflection of the beam.

$W := 1200 \cdot lbf$ Load sum of both columns

$a_1 := \left(14.37 + \frac{22.5}{2}\right) \cdot in$ One load centered between the columns

$$Max_y := \frac{-W \cdot a_1}{3 \cdot E \cdot I \cdot l} \cdot \left(\frac{l^2 - a^2}{3} \right)^{\frac{3}{2}} = -0.078 \cdot in$$

This number is small enough to show that the grating is not required to provide any support and all of the load is really carried to the main support beams for the Intermediate Deck. Repeat the same calculation for the bottom beam on the print although it looks fine by inspection because the top beam is fine.

$P := 600 \cdot lbf$

$l := 79.06 \cdot in$

These dimensions are for the beam at the bottom of the plan view on the drawing.

$a := l - 45.96 \cdot in - 2 \cdot in - 12in = \blacksquare \cdot in$

$b := (45.96 + 2) \cdot in$

$R_1 := \frac{P}{l} \cdot (l - a + b) = 819.024 \cdot lbf$

$R_2 := \frac{P}{l} \cdot (l - b + a) = 380.976 \cdot lbf$

$M1 := R_1 \cdot a = 1.564 \times 10^4 \cdot in \cdot lbf$

Maximum moment in the beam

$\sigma_{bend} := \frac{M1}{S} = 3.806 \times 10^3 \cdot psi$

The maximum allowable bending stress for a tube is .66 times 46 ksi or 30.66 ksi. The beam is not over stressed. The deflection is not given in this AISC case. In Roark's Formulas for Stress and Strain, on page 101there is a formula for deflection of one load on a simply supported beam. Using that formula by combining the two load of the columns into one load at the center between the two columns should be a worst case deflection of the beam.

$W := 1200 \cdot lbf$

Load sum of both columns

$a_1 := \left(19.1 + \frac{12}{2}\right) \cdot in$

One load centered between the columns

$$Max_y := \frac{-W \cdot a_1}{3 \cdot E \cdot I \cdot l} \cdot \left(\frac{l^2 - a^2}{3} \right)^{\frac{3}{2}} = -0.074 \cdot in$$

Once again the deflection of the tube is small and there is no large force on the grating between the main beams of the Intermediate deck.

PART 3
Spring supports

The support is designed with springs to hold the load of the valve set. The springs allow some compliance in the height of the valve. The vessel is made from 304 stainless steel and is cooled to nearly liquid nitrogen temperature, and hence shrinks in height by this amount

$$150 \cdot in \cdot \left(279 \cdot 10^{-5} \cdot \frac{in}{in}\right) = 0.419 \cdot in$$

This shrinkage is away from the Intermediate deck so the support must allow for it.

$$Wt_{total} := (1820 + 185) \cdot lbf$$

$$\frac{Wt_{total}}{4} = 501.25 \cdot lbf$$ Weight supported by each spring

The spring rate of the springs is 341 lbf/in.

$$\frac{501.25 \cdot lbf}{341 \cdot \frac{lbf}{in}} = 1.47 \cdot in$$ Total deflection of the spring

The natural length of the spring is 6 inches and the fully compressed length is 3.44 inches.

$$6 \cdot in - 1.47 \cdot in = 4.53 \cdot in$$ Length of spring with valves and fixture load on it

$$4.53 \cdot in - 3.44 in = 1.09 \cdot in$$ Amound of compression left till a solid spring

The vent pipe does not get cold and shrink while the vessel cools down. This means that the ven pipe is put under an additional tensile stress which needs to be quantified.

$$.419 \cdot in \cdot 341 \cdot \frac{lbf}{in} = 142.879 \cdot lbf$$ Force on end of pipe

$D_o := 4.5 \cdot in$ $D_i := 4.026 \cdot in$ OD and ID of 4"sch 40 pipe

$$A_{pipe} := \frac{\pi}{4} \cdot \left(D_o^{\,2} - D_i^{\,2}\right) = 3.174 \cdot in^2$$

$$\sigma tensile := \frac{142.879 \cdot lbf}{A_{pipe}} = 45.015 \cdot psi$$

This stress is OK for the pipe, however notice that the turnbuckles are intended to be lengthened to allow removing this stress. When the valve is required to open the pipe will cool down and will supply another load to the springs that happens quickly and can not be adjusted out by the turnbuckles. Since the pipe is only a third as long as the vessel is tall when it is cooled down the tensile load and shrinkage will both be only a third of the amound above and can be neglected.

Finally, when the relief valve opens there is an unbalanced force trying to move the valve away from the vent pipe. The calculation is based on an example from Introduction to Fluid Mechanics by Fox and McDonald. On page 120 there is an example of the force on a 90 degree reducing elbow. The relief valve can be modeled in the same manner by calling port 1 in the example the inlet to the valve and port 2 the outlet. Use the same control volume as shown in the example. Because of this choice the x direction is actually vertical for the relief valve and positive x is up. Likewise for the y direction the positive y is horizontal and towards the vent stack.

$$Mdot := 13850 \cdot \frac{lb}{hr}$$ rated flow rate of the relief valve

$$p_1 := 33 \cdot psi$$ Inlet pressure of relief valve at opening

$$\rho_1 := .32944 \cdot \frac{lb}{ft^3}$$ density of argon at 47.696 psia and 300K

$$A1 := \frac{\pi}{4} \cdot (4.026 \cdot in)^2 = 0.088 \cdot ft^2$$ ID area of 4" pipe schedule 40

$$V1 := \frac{Mdot}{\rho_1 \cdot A1} = 132.098 \cdot \frac{ft}{s}$$ Flow velocity at the inlet to the valve

$$R_x := -p_1 \cdot A1 - V1 \cdot \rho_1 \cdot V1 \cdot A1 = -435.894 \cdot lbf$$

This force is trying to push the relief valve down towards the vessel and hence is trying to compress the springs. Assume the force is equally devided amoung the three springs.

$$F_{add} := \frac{R_x}{3} = -145.298\ lbf$$ Force on each spring.

$$\frac{F_{add}}{341 \cdot \frac{lbf}{in}} = -0.426\,in$$

The amount extra that the springs will compress.

Note that from the calculation above this does not collapse the spring solid.

Calculate the force in the y direction which tries to force the valve away from the vent pipe.

$$A2 := \frac{\pi}{4} \cdot (6 \cdot in)^2 = 0.196 \cdot ft^2$$

$$V2 := V1 \cdot \left(\frac{A1}{A2}\right) = 59.476 \cdot \frac{ft}{s}$$

$$\rho_2 := .1014 \cdot \frac{lb}{ft^3}$$

$$F_{By} := 0$$

Ignore since the volume of the valve inside is unknown and the mass of argon inside is insignificant compared to the weight of the valve.

$$R_y := -F_{By} + V2 \cdot \rho_2 \cdot V2 \cdot A2 = 2.189 \cdot lbf$$

This force pushing the valve away from the vent pipe is negligible and is easily taken up by the support structure. The vent pipe is connected to the relief valve by two three foot long by 6" diameter flex hoses for any motion is easily accommodated.

REV	DESCRIPTION	DRAWN	DATE
		APPROVED	DATE

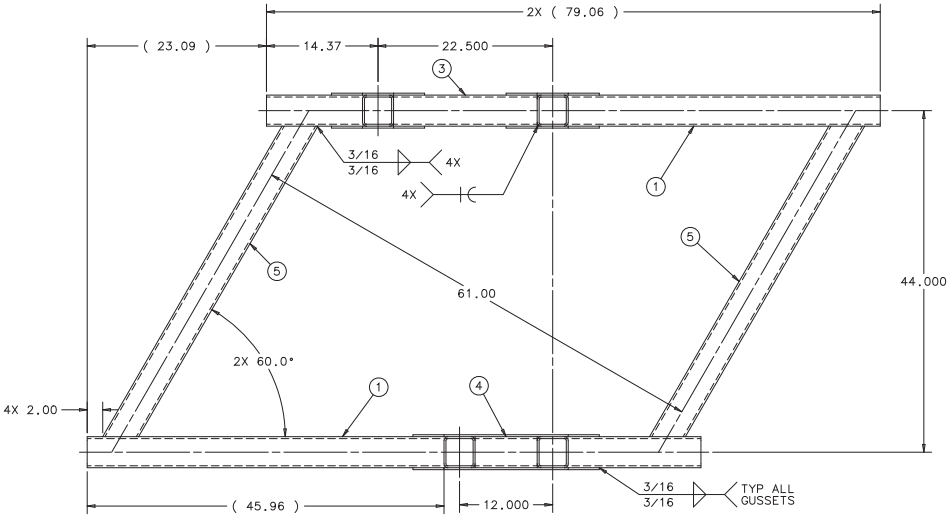

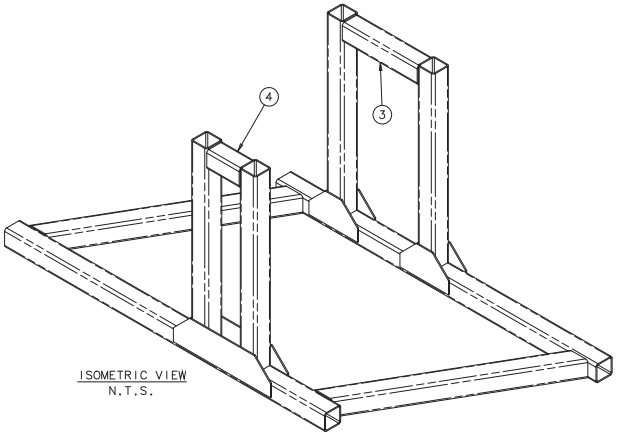

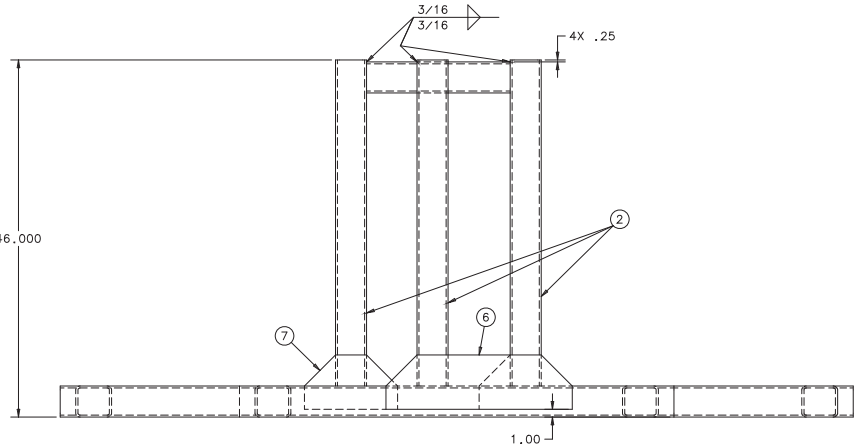

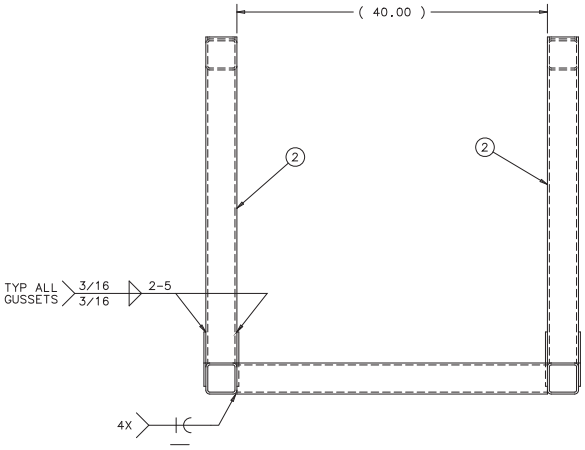

NOTES:
1. ALL WELDMENTS MUST BE IN ACCORDANCE WITH THE STRUCTURAL WELDING CODE ANSI/AWS D1.1.
2. ALL WELDS SHALL BE MADE IN A SEQUENCE THAT WILL BALANCE THE APPLIED HEAT OF WELDING WHILE THE WELDING PROGRESSES. THE PROCEDURE AND SEQUENCE SHALL BE SUCH AS WILL MINIMIZE DISTORTION AND SHRINKAGE.
3. ALL WELD METALS ARE E70XX UNLESS OTHERWISE SPECIFIED.
4. CLEAN AND DEGREASE WELDMENT PRIOR TO PAINTING. PRIME WITH FLAT WHITE 1600 SYSTEM MULTI-PURPOSE ENAMEL RUSTOLEUM PRIMER OR EQUIVALENT.
5. APPROXIMATE WEIGHT: 500 LBS.

7	MB-497420	UBOONE SSV SUP. GUSSET PLATE B	4
6	MB-497419	UBOONE SSV SUP. GUSSET PLATE A	2
5	MB-497418	TUBE SQ. 4X4X25X48.50 MITERED	2
4	COML	SQUARE TUBE; 4" X 4" X 1/4" X 8.00 LG; A500 GR. B OR EQUIV.	1
3	COML	SQUARE TUBE; 4" X 4" X 1/4" X 18.50 LG; A500 GR. B OR EQUIV.	1
2	COML	SQUARE TUBE; 4" X 4" X 1/4" X 42.00 LG; A500 GR. B OR EQUIV.	4
1	COML	SQUARE TUBE; 4" X 4" X 1/4" X 79.06 LG; A500 GR. B OR EQUIV.	2

UNLESS OTHERWISE SPECIFIED			ORIGINATOR	J.TILLMAN	20-MAR-2014
.XX	.XXX	ANGLES	DRAWN	J.TILLMAN	20-MAR-2014
± .13	± .06	± 1°	CHECKED	J.RAUCH	27-MAR-2014
			APPROVED	J.KILMER	28-MAR-2014

1. BREAK ALL SHARP EDGES .02 MAX.
2. DO NOT SCALE DRAWING.
3. DIMENSIONS BASED UPON ASME Y14.5M-1994
4. MAX. ALL MACH. SURFACES 250
5. DRAWING UNITS: U.S. INCH

USED ON: MD-497430

MATERIAL: SEE PARTS LIST ABOVE

FERMI NATIONAL ACCELERATOR LABORATORY
UNITED STATES DEPARTMENT OF ENERGY

E974-MICROBOONE - INFRASTRUCTURE SERVICE EQUIPMENT CRYOSTAT VENT SUP. LOWER ASSY

SCALE	DRAWING NUMBER	SHEET	REV
1:8 & AS NOTED	3974.110-MD-497417	1 OF 1	

CREATED WITH : Ideas12NXSeries GROUP: PPD/MECHANICAL DEPARTMENT

NOTICE: IMAGE OBTAINED FROM FERMILAB
Computer Aided Design Group.
This image is an uncontrolled document and may not be the current, approved version.
This information is provided for REFERENCE use only. Not for MANUFACTURE, or BUILD INFORMATION.
All information contained in this document represents work sponsored by an agency of the U.S. Government. Neither the U.S. Government nor any agency thereof, nor Universities Research Association, Inc., nor any of their employees or officers, makes any warranty, express or implied, or assumes any legal liability or responsibility for the accuracy, completeness, or usefulness of any information, apparatus, product or process disclosed, or represents that its use would not infringe privately owned rights.

REV	DESCRIPTION	DRAWN	DATE
		APPROVED	DATE

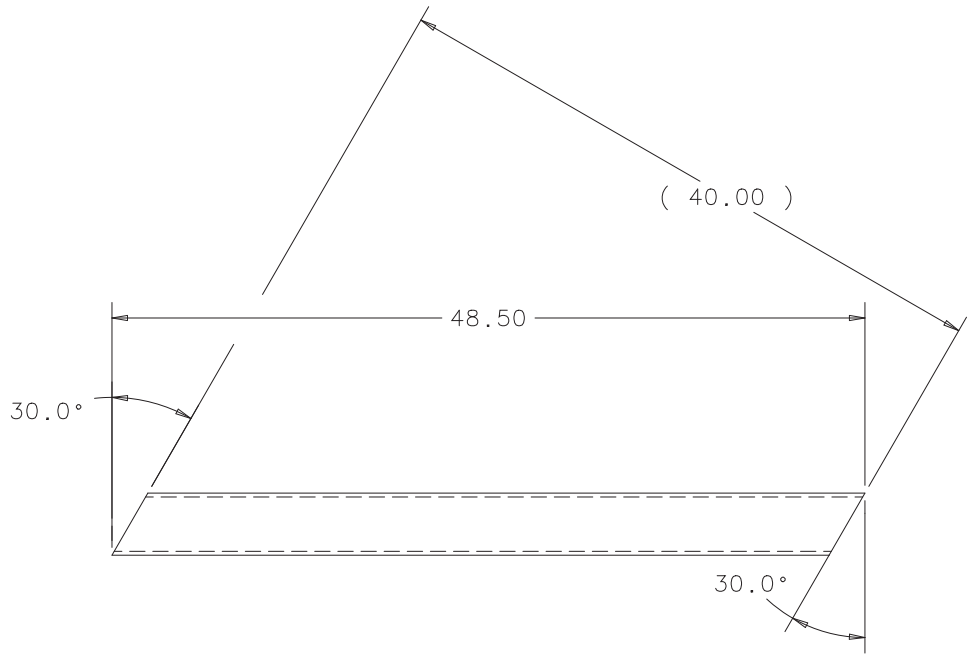

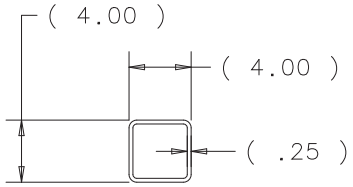

UNLESS OTHERWISE SPECIFIED			ORIGINATOR	J.TILLMAN	20-MAR-2014
.XX	.XXX	ANGLES	DRAWN	J.TILLMAN	20-MAR-2014
± .06	± ***	± 1°	CHECKED	J.RAUCH	28-MAR-2014
			APPROVED	J.KILMER	28-MAR-2014

1. BREAK ALL SHARP EDGES .02 MAX.
2. DO NOT SCALE DRAWING.
3. DIMENSIONS BASED UPON ASME Y14.5M-1994
4. MAX. ALL MACH. SURFACES 250
5. DRAWING UNITS: U.S. INCH

USED ON: MD-497417

MATERIAL: 4" X 4" X 1/4" SQUARE TUBE A500 GR.B OR EQUIV.

FERMI NATIONAL ACCELERATOR LABORATORY
UNITED STATES DEPARTMENT OF ENERGY

E974-MICROBOONE - INFRASTRUCTURE SERVICE EQUIPMENT TUBE SQ. 4X4X25X48-50 MITERED

SCALE	DRAWING NUMBER	SHEET	REV
1:8 & AS NOTED	3974.110-MB-497418	1 OF 1	

CREATED WITH : Ideas12NXSeries | GROUP: PPD/MECHANICAL DEPARTMENT

NOTICE: IMAGE OBTAINED FROM FERMILAB
Computer Aided Design Group.
This image is an uncontrolled document and may not be the current, approved version.

This information is provided for REFERENCE use only. Not for MANUFACTURE, or DESIGN INFORMATION. All information contained in this document represents work sponsored by an agency of the U.S. Government. Neither the U.S. Government nor any agency thereof, nor Universities Research Association, Inc., nor any of their employees or officers, makes any warranty, express or implied, or assumes any legal liability or responsibility for the accuracy, completeness, or usefulness of any information, apparatus, product or process disclosed, or represents that its use would not infringe privately owned rights.

REV	DESCRIPTION	DRAWN	DATE
		APPROVED	DATE

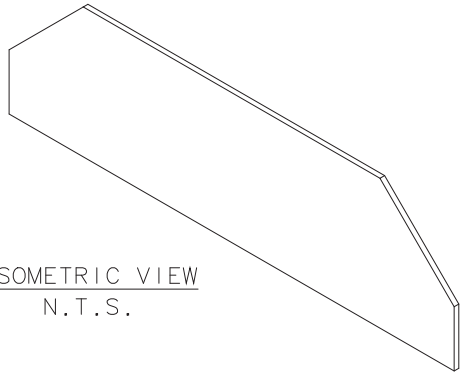

ISOMETRIC VIEW
N.T.S.

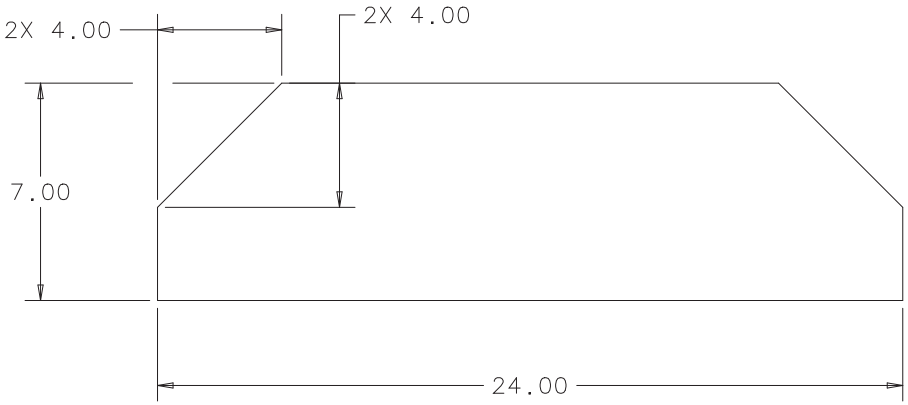

EST. WEIGHT: 11 LBS

UNLESS OTHERWISE SPECIFIED			ORIGINATOR	J.TILLMAN	20-MAR-2014
.XX	.XXX	ANGLES	DRAWN	J.TILLMAN	20-MAR-2014
± .13	± ***	± ***	CHECKED	J.RAUCH	28-MAR-2014
			APPROVED	J.KILMER	28-MAR-2014

1. BREAK ALL SHARP EDGES .02 MAX.
2. DO NOT SCALE DRAWING.
3. DIMENSIONS BASED UPON ASME Y14.5M-1994
4. MAX. ALL MACH. SURFACES 250
5. DRAWING UNITS: U.S. INCH

USED ON: MD-493417

MATERIAL: ASTM-A36 STEEL OR EQUIVALENT

FERMI NATIONAL ACCELERATOR LABORATORY
UNITED STATES DEPARTMENT OF ENERGY

E974-MICROBOONE - INFRASTRUCTURE SERVICE EQUIPMENT UBOONE SSV SUP. GUSSET PLATE A

SCALE	DRAWING NUMBER	SHEET	REV
1:4 & AS NOTED	3974.110-MB-497419	1 OF 1	

CREATED WITH : Ideas12NXSeries | GROUP: PPD/MECHANICAL DEPARTMENT

NOTICE: IMAGE OBTAINED FROM FERMILAB
Computer Aided Design Group.
This image is an uncontrolled document and may not be the current, approved version.

This information is provided for REFERENCE use only. Not for MANUFACTURE, or DESIGN INFORMATION. All information contained in this document represents work sponsored by an agency of the U.S. Government. Neither the U.S. Government nor any agency thereof, nor Universities Research Association, Inc., nor any of their employees or officers, makes any warranty, express or implied, or assumes any legal liability or responsibility for the accuracy, completeness, or usefulness of any information, apparatus, product or process disclosed, or represents that its use would not infringe privately owned rights.

REV	DESCRIPTION	DRAWN	DATE
		APPROVED	DATE

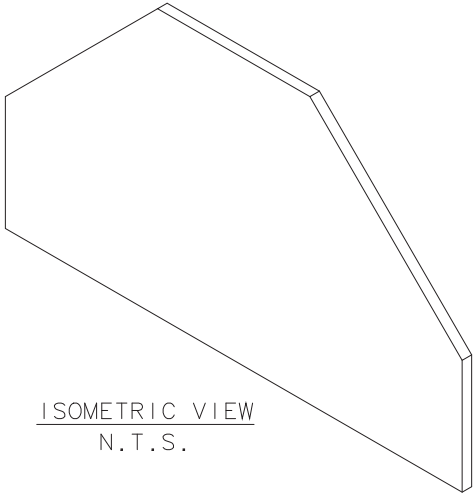

ISOMETRIC VIEW
N.T.S.

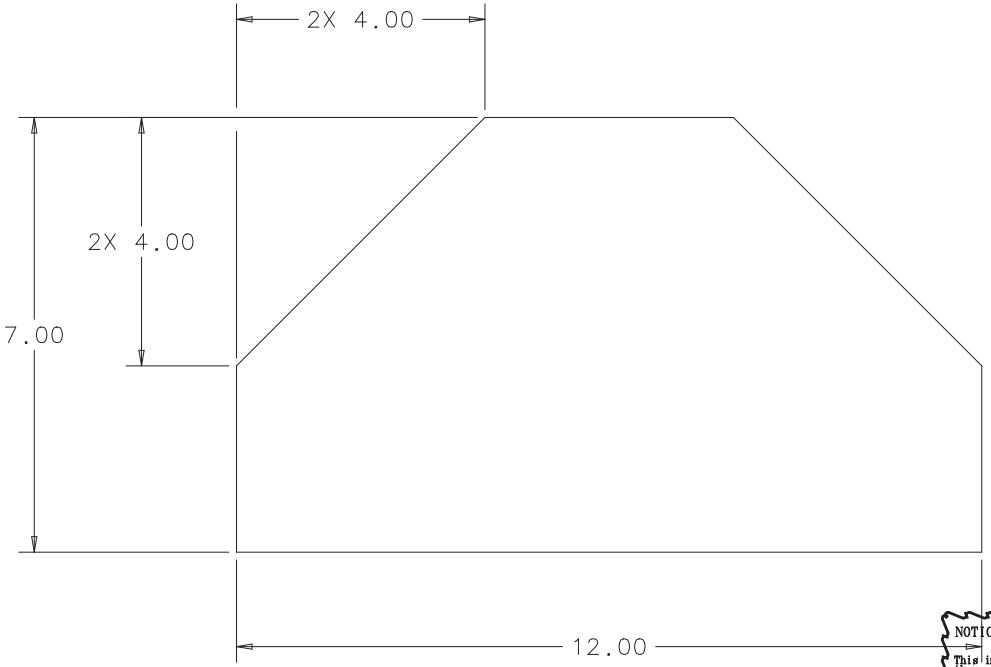

EST. WEIGHT: 5 LBS

UNLESS OTHERWISE SPECIFIED			ORIGINATOR	J.TILLMAN	20-MAR-2014
.XX	.XXX	ANGLES	DRAWN	J.TILLMAN	20-MAR-2014
± .13	± ***	± ***	CHECKED	J.RAUCH	28-MAR-2014
			APPROVED	J.KILMER	28-MAR-2014

1. BREAK ALL SHARP EDGES .02 MAX.
2. DO NOT SCALE DRAWING.
3. DIMENSIONS BASED UPON ASME Y14.5M-1994
4. MAX. ALL MACH. SURFACES 250
5. DRAWING UNITS: U.S. INCH

USED ON: MD-497417

MATERIAL: ASTM-A36 STEEL OR EQUIVALENT

FERMI NATIONAL ACCELERATOR LABORATORY
UNITED STATES DEPARTMENT OF ENERGY

E974-MICROBOONE - INFRASTRUCTURE SERVICE EQUIPMENT UBOONE SSV SUP. GUSSET PLATE B

SCALE	DRAWING NUMBER	SHEET	REV
1:2 & AS NOTED	3974.110-MB-497420	1 OF 1	

CREATED WITH : Ideas12NXSeries | GROUP: PPD/MECHANICAL DEPARTMENT

NOTICE: IMAGE OBTAINED FROM FERMILAB
Computer Aided Design Group.
This image is an uncontrolled document and may not be the current, approved version.

This information is provided for REFERENCE use only. Not for MANUFACTURE, or DESIGN INFORMATION. All information contained in this document represents work sponsored by an agency of the U.S. Government. Neither the U.S. Government nor any agency thereof, nor Universities Research Association, Inc., nor any of their employees or officers, makes any warranty, express or implied, or assumes any legal liability or responsibility for the accuracy, completeness, or usefulness of any information, apparatus, product or process disclosed, or represents that its use would not infringe privately owned rights.

REV	DESCRIPTION	DRAWN	DATE
		APPROVED	DATE

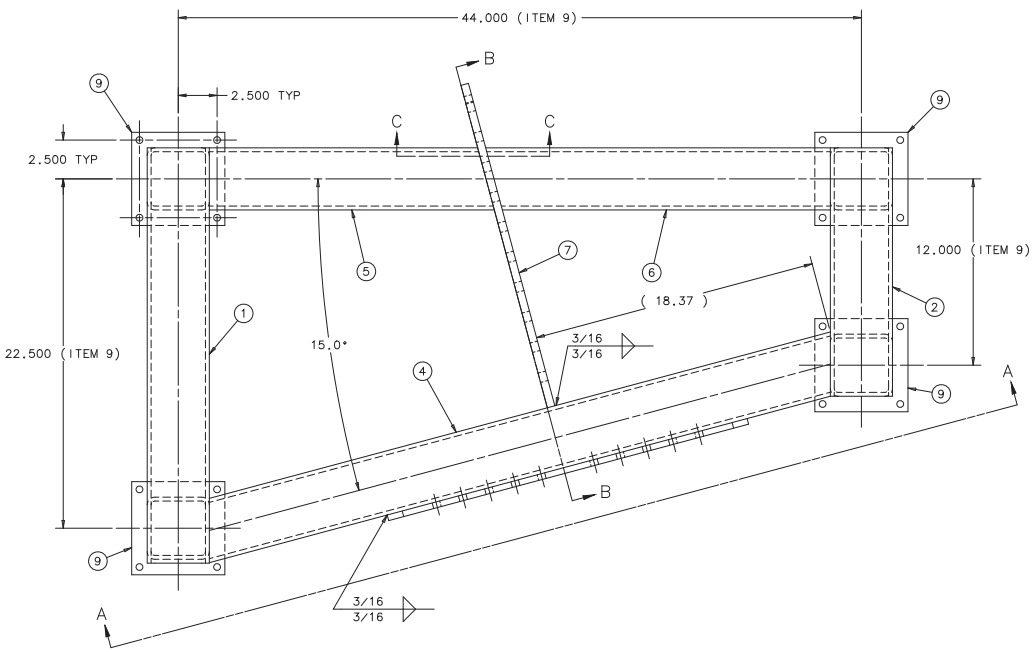

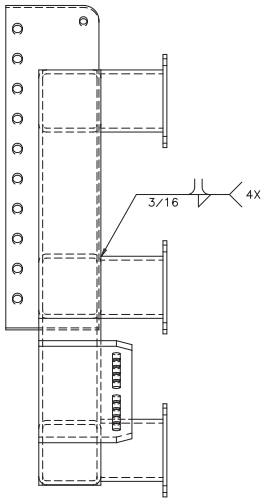

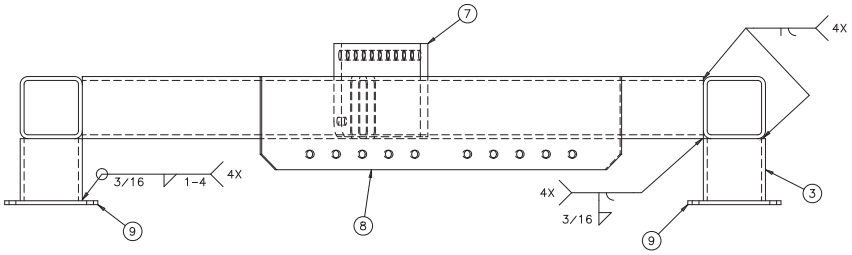

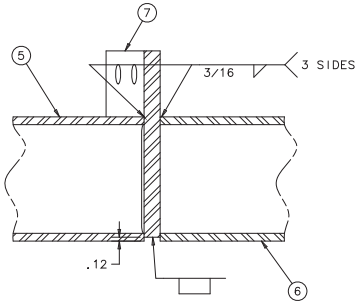

SECTION C-C
SCALE: 1:2

ITEM	PART NO.	DESCRIPTION OR SIZE	QTY.
9	MB-497427	PLATE; FLANGE 6 X 6 X 250	12
8	MB-497426	PLATE REAR TURNBUCKLE MOUNT	1
7	MB-497425	PLATE S.S.V. SUP. LIFT PLATE	1
6	MB-497424	TUBE SQ. 4X4X25X22.20 MITERED	1
5	MB-497423	TUBE SQ. 4X4X25X18.36 MITERED	1
4	MB-497422	TUBE SQ. 4X4X25X42.48 MITERED	1
3	COML	SQUARE TUBE; 4" X 4" X 1/4" X 4.00 LG; A500 GR. B OR EQUIV.	4
2	COML	SQUARE TUBE; 4" X 4" X 1/4" X 16.00 LG; A500 GR. B OR EQUIV.	1
1	COML	SQUARE TUBE; 4" X 4" X 1/4" X 26.75 LG; A500 GR. B OR EQUIV.	1

PARTS LIST

UNLESS OTHERWISE SPECIFIED			ORIGINATOR	J.TILLMAN	20-MAR-2014
.XX	.XXX	ANGLES	DRAWN	J.TILLMAN	20-MAR-2014
± .13	± .063	± 1°	CHECKED	J.RAUCH	28-MAR-2014
			APPROVED	J.KILMER	28-MAR-2014

1. BREAK ALL SHARP EDGES .02 MAX.
2. DO NOT SCALE DRAWING.
3. DIMENSIONS BASED UPON ASME Y14.5M-1994
4. MAX. ALL MACH. SURFACES 250
5. DRAWING UNITS: U.S. INCH

USED ON: MD-497430

MATERIAL: SEE PARTS LIST ABOVE

NOTES:

1. ALL WELDMENTS MUST BE IN ACCORDANCE WITH THE STRUCTURAL WELDING CODE ANSI/AWS D1.1.
2. ALL WELDS SHALL BE MADE IN A SEQUENCE THAT WILL BALANCE THE APPLIED HEAT OF WELDING WHILE THE WELDING PROGRESSES. THE PROCEDURE AND SEQUENCE SHALL BE SUCH AS WILL MINIMIZE DISTORTION AND SHRINKAGE.
3. ALL WELD METALS ARE E70XX UNLESS OTHERWISE SPECIFIED.
4. CLEAN AND DEGREASE WELDMENT PRIOR TO PAINTING. PRIME WITH FLAT WHITE 1600 SYSTEM MULTI-PURPOSE ENAMEL RUSTOLEUM PRIMER OR EQUIVALENT.
5. APPROXIMATE WEIGHT: 185 LBS.
6. 8 ADDITIONAL ITEM 9'S HAVE BEEN INCLUDED IN THE B.O.M. FOR USE AS SHIMS AS REQUIRED.

NOTICE: IMAGE OBTAINED FROM FERMILAB WEB SITE
This information is provided for REFERENCE use only. Not for MANUFACTURE, or DESIGN INFORMATION. All information contained in this document represents work sponsored by an agency of the U.S. Government. Neither the U.S. Government nor any agency thereof, nor Universities Research Association, Inc., nor any of their employees or officers, makes any warranty, express or implied, or assumes any legal liability or responsibility for the accuracy, completeness, or usefulness of any information, apparatus, product or process disclosed, or represents that its use would not infringe privately owned rights.

FERMI NATIONAL ACCELERATOR LABORATORY
UNITED STATES DEPARTMENT OF ENERGY

E974-MICROBOONE - INFRASTRUCTURE SERVICE EQUIPMENT
CRYOSTAT VENT SUP. UPPER ASSY

SCALE	DRAWING NUMBER	SHEET	REV
1:8 & AS NOTED	3974.110-MD-497421	1 OF 2	

CREATED WITH : Ideas12NXSeries | GROUP: PPD/MECHANICAL DEPARTMENT

Created: 12:54:00 on 28-03-14 (D-M-Y) By: jtillman State: 1-INITIAL

REV	DESCRIPTION	DRAWN	DATE
		APPROVED	DATE

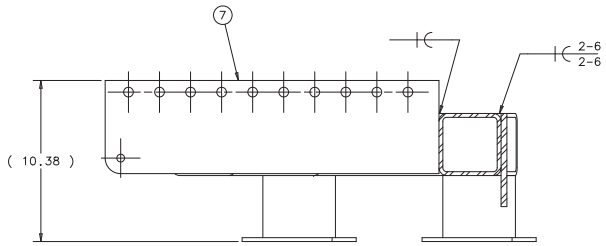

SECTION B-B
SCALE: 1:4

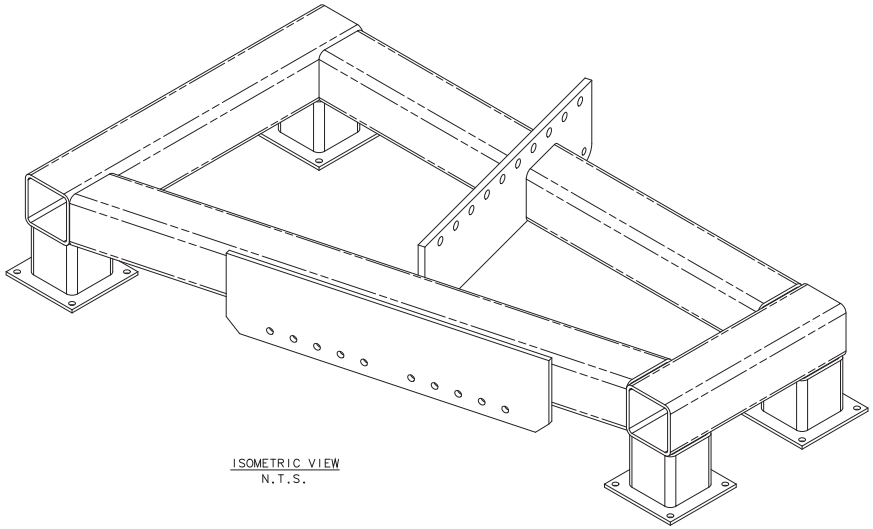

ISOMETRIC VIEW
N.T.S.

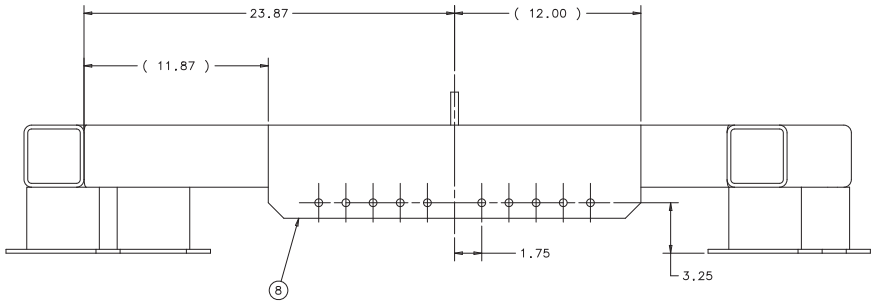

SECTION A-A
SCALE: 1:4

UNLESS OTHERWISE SPECIFIED			ORIGINATOR	J.TILLMAN	20-MAR-2014
.XX	.XXX	ANGLES	DRAWN	J.TILLMAN	20-MAR-2014
± .13	± .063	± 1°	CHECKED	J.RAUCH	28-MAR-2014
1. BREAK ALL SHARP EDGES .02 MAX. 2. DO NOT SCALE DRAWING. 3. DIMENSIONS BASED UPON ASME Y14.5M-1994 4. MAX. ALL MACH. SURFACES 250 5. DRAWING UNITS:U.S.INCH			APPROVED	J.KILMER	28-MAR-2014
			USED ON	MD-497430	
			MATERIAL	SEE PARTS LIST ABOVE	

FERMI NATIONAL ACCELERATOR LABORATORY
UNITED STATES DEPARTMENT OF ENERGY

NOTICE: IMAGE OBTAINED FROM FERMILAB WEB SITE
This information is provided for REFERENCE use only.
Not for MANUFACTURE, or DESIGN INFORMATION.
All information contained in this document represents work sponsored by an agency of the U.S. Government.
Neither the U.S. Government nor any agency thereof, nor Universities Research Association, Inc., nor any of their employees or officers, makes any warranty, express or implied, or assumes any legal liability or responsibility for the accuracy, completeness, or usefulness of any information, apparatus, product or process disclosed, or represents that its use would not infringe privately owned rights.

E974-MICROBOONE - INFRASTRUCTURE SERVICE EQUIPMENT CRYOSTAT VENT SUP. UPPER ASSY

SCALE	DRAWING NUMBER	SHEET	REV
1:8 & AS NOTED	3974.110-MD-497421	2 OF 2	

CREATED WITH : Ideas12NXSeries | GROUP: PPD/MECHANICAL DEPARTMENT

REV	DESCRIPTION	DRAWN	DATE
		APPROVED	DATE

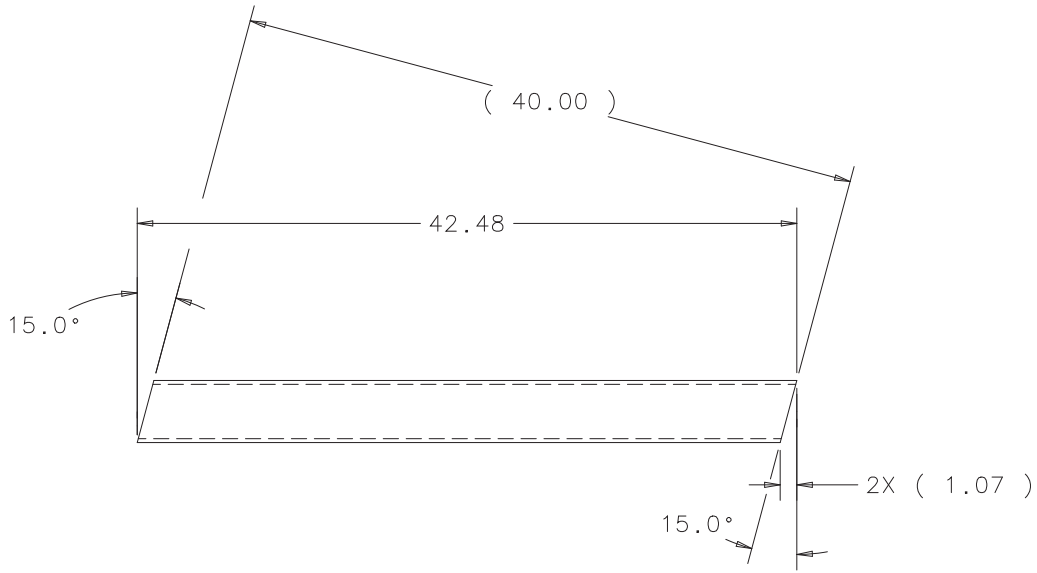

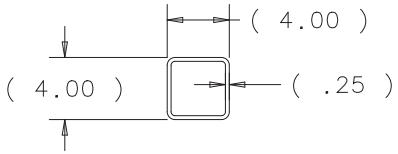

UNLESS OTHERWISE SPECIFIED			ORIGINATOR	J.TILLMAN	20-MAR-2014
.XX	.XXX	ANGLES	DRAWN	J.TILLMAN	20-MAR-2014
± .06	± ***	± 1°	CHECKED	J.RAUCH	28-MAR-2014
			APPROVED	J.KILMER	28-MAR-2014

1. BREAK ALL SHARP EDGES .02 MAX.
2. DO NOT SCALE DRAWING.
3. DIMENSIONS BASED UPON ASME Y14.5M-1994
4. MAX. ALL MACH. SURFACES 250
5. DRAWING UNITS: U.S. INCH

USED ON: MD-497421

MATERIAL: 4" X 4" X 1/4" SQUARE TUBE A500 GR.B OR EQUIV.

FERMI NATIONAL ACCELERATOR LABORATORY
UNITED STATES DEPARTMENT OF ENERGY

E974-MICROBOONE - INFRASTRUCTURE SERVICE EQUIPMENT TUBE SQ. 4X4X25X42-48 MITERED

SCALE	DRAWING NUMBER	SHEET	REV
1:8 & AS NOTED	3974.110-MB-497422	1 OF 1	

CREATED WITH : Ideas12NXSeries | GROUP: PPD/MECHANICAL DEPARTMENT

NOTICE: IMAGE OBTAINED FROM FERMILAB
Computer Aided Design Group.
This image is an uncontrolled document and may not be the current, approved version.

This information is provided for REFERENCE use only. Not for MANUFACTURE, or DESIGN INFORMATION. All information contained in this document represents work sponsored by an agency of the U.S. Government. Neither the U.S. Government nor any agency thereof, nor Universities Research Association, Inc., nor any of their employees or officers, makes any warranty, express or implied, or assumes any legal liability or responsibility for the accuracy, completeness, or usefulness of any information, apparatus, product or process disclosed, or represents that its use would not infringe privately owned rights.

REV	DESCRIPTION	DRAWN	DATE
		APPROVED	DATE

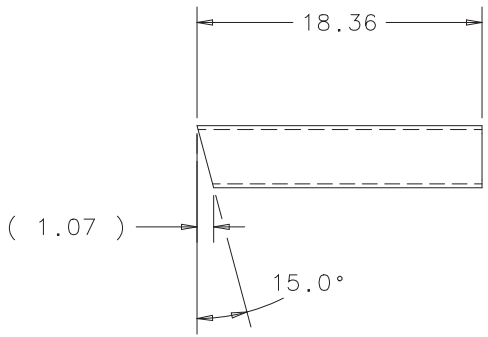

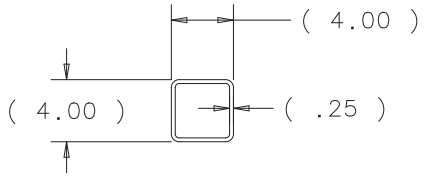

UNLESS OTHERWISE SPECIFIED			ORIGINATOR	J.TILLMAN	20-MAR-2014
.XX	.XXX	ANGLES	DRAWN	J.TILLMAN	20-MAR-2014
± .06	± ***	± 1°	CHECKED	J.RAUCH	28-MAR-2014
			APPROVED	J.KILMER	28-MAR-2014

1. BREAK ALL SHARP EDGES .02 MAX.
2. DO NOT SCALE DRAWING.
3. DIMENSIONS BASED UPON ASME Y14.5M-1994
4. MAX. ALL MACH. SURFACES 250
5. DRAWING UNITS: U.S. INCH

USED ON: MD-497421

MATERIAL: 4" X 4" X 1/4" SQUARE TUBE A500 GR.B OR EQUIV.

FERMI NATIONAL ACCELERATOR LABORATORY
UNITED STATES DEPARTMENT OF ENERGY

E974-MICROBOONE - INFRASTRUCTURE SERVICE EQUIPMENT TUBE SQ. 4X4X25X18-36 MITERED

SCALE	DRAWING NUMBER	SHEET	REV
1:8 & AS NOTED	3974.110-MB-497423	1 OF 1	

CREATED WITH : Ideas12NXSeries | GROUP: PPD/MECHANICAL DEPARTMENT

NOTICE: IMAGE OBTAINED FROM FERMILAB
Computer Aided Design Group.
This image is an uncontrolled document and may not be the current, approved version.

This information is provided for REFERENCE use only. Not for MANUFACTURE, or DESIGN INFORMATION. All information contained in this document represents work sponsored by an agency of the U.S. Government. Neither the U.S. Government nor any agency thereof, nor Universities Research Association, Inc., nor any of their employees or officers, makes any warranty, express or implied, or assumes any legal liability or responsibility for the accuracy, completeness, or usefulness of any information, apparatus, product or process disclosed, or represents that its use would not infringe privately owned rights.

REV	DESCRIPTION	DRAWN	DATE
		APPROVED	DATE

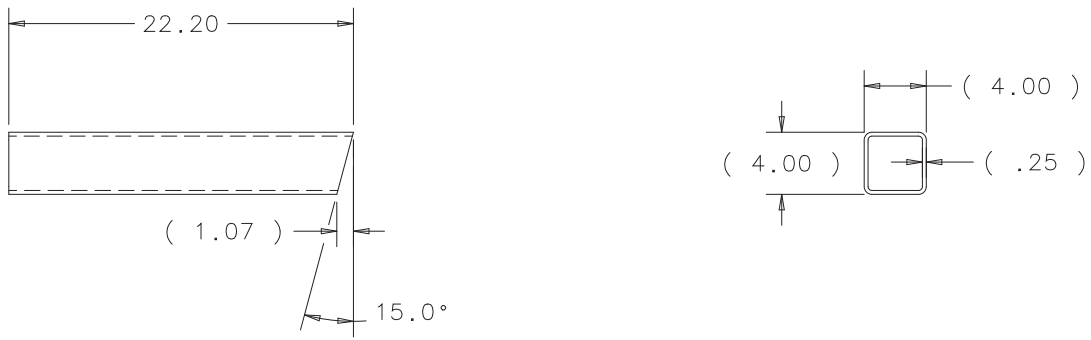

UNLESS OTHERWISE SPECIFIED			ORIGINATOR	J.TILLMAN	20-MAR-2014
.XXX		ANGLES	DRAWN	J.TILLMAN	20-MAR-2014
± .06	± ***	± 1°	CHECKED	J.RAUCH	28-MAR-2014
			APPROVED	J.KILMER	28-MAR-2014

1. BREAK ALL SHARP EDGES .02 MAX.
2. DO NOT SCALE DRAWING.
3. DIMENSIONS BASED UPON ASME Y14.5M-1994
4. MAX. ALL MACH. SURFACES 250
5. DRAWING UNITS: U.S. INCH

USED ON: MD-497421

MATERIAL: 4" X 4" X 1/4" SQUARE TUBE A500 GR.B OR EQUIV.

FERMI NATIONAL ACCELERATOR LABORATORY
UNITED STATES DEPARTMENT OF ENERGY

E974-MICROBOONE - INFRASTRUCTURE SERVICE EQUIPMENT TUBE SQ. 4X4X25X22-20 MITERED

SCALE	DRAWING NUMBER	SHEET	REV
1:8 & AS NOTED	3974.110-MB-497424	1 OF 1	

CREATED WITH : Ideas12NXSeries | GROUP: PPD/MECHANICAL DEPARTMENT

NOTICE: IMAGE OBTAINED FROM FERMILAB
Computer Aided Design Group.
This image is an uncontrolled document and may not be the current, approved version.

This information is provided for REFERENCE use only. Not for MANUFACTURE, or DESIGN INFORMATION. All information contained in this document represents work sponsored by an agency of the U.S. Government. Neither the U.S. Government nor any agency thereof, nor Universities Research Association, Inc., nor any of their employees or officers, makes any warranty, express or implied, or assumes any legal liability or responsibility for the accuracy, completeness, or usefulness of any information, apparatus, product or process disclosed, or represents that its use would not infringe privately owned rights.

REV	DESCRIPTION	DRAWN	DATE
		APPROVED	DATE

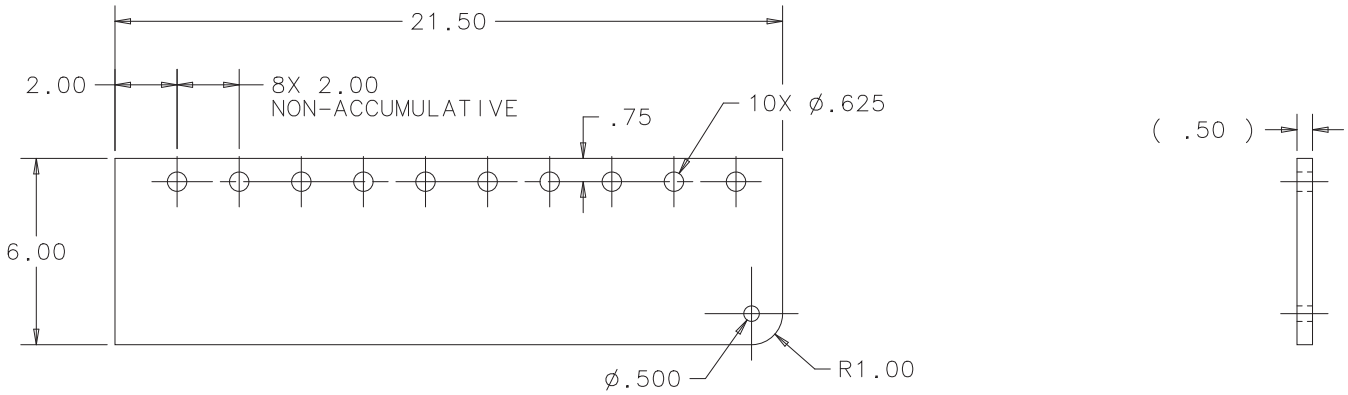

UNLESS OTHERWISE SPECIFIED			ORIGINATOR	J.TILLMAN	20-MAR-2014
.XX	.XXX	ANGLES	DRAWN	J.TILLMAN	20-MAR-2014
± .06	± .020	± ***	CHECKED	J.RAUCH	28-MAR-2014
			APPROVED	J.KILMER	28-MAR-2014

1. BREAK ALL SHARP EDGES .02 MAX.
2. DO NOT SCALE DRAWING.
3. DIMENSIONS BASED UPON ASME Y14.5M-1994
4. MAX. ALL MACH. SURFACES 250
5. DRAWING UNITS: U.S. INCH

USED ON: MD-497421

MATERIAL: ASTM-A36 STEEL OR EQUIVALENT

FERMI NATIONAL ACCELERATOR LABORATORY
UNITED STATES DEPARTMENT OF ENERGY

E974-MICROBOONE - INFRASTRUCTURE SERVICE EQUIPMENT PLATE S.S.V. SUP. LIFT PLATE

SCALE	DRAWING NUMBER	SHEET	REV
1:4 & AS NOTED	3974.110-MB-497425	1 OF 1	

CREATED WITH : Ideas12NXSeries | GROUP: PPD/MECHANICAL DEPARTMENT

NOTICE: IMAGE OBTAINED FROM FERMILAB
Computer Aided Design Group.
This image is an uncontrolled document and may not be the current, approved version.

This information is provided for REFERENCE use only. Not for MANUFACTURE, or DESIGN INFORMATION. All information contained in this document represents work sponsored by an agency of the U.S. Government. Neither the U.S. Government nor any agency thereof, nor Universities Research Association, Inc., nor any of their employees or officers, makes any warranty, express or implied, or assumes any legal liability or responsibility for the accuracy, completeness, or usefulness of any information, apparatus, product or process disclosed, or represents that its use would not infringe privately owned rights.

REV	DESCRIPTION	DRAWN	DATE
		APPROVED	DATE

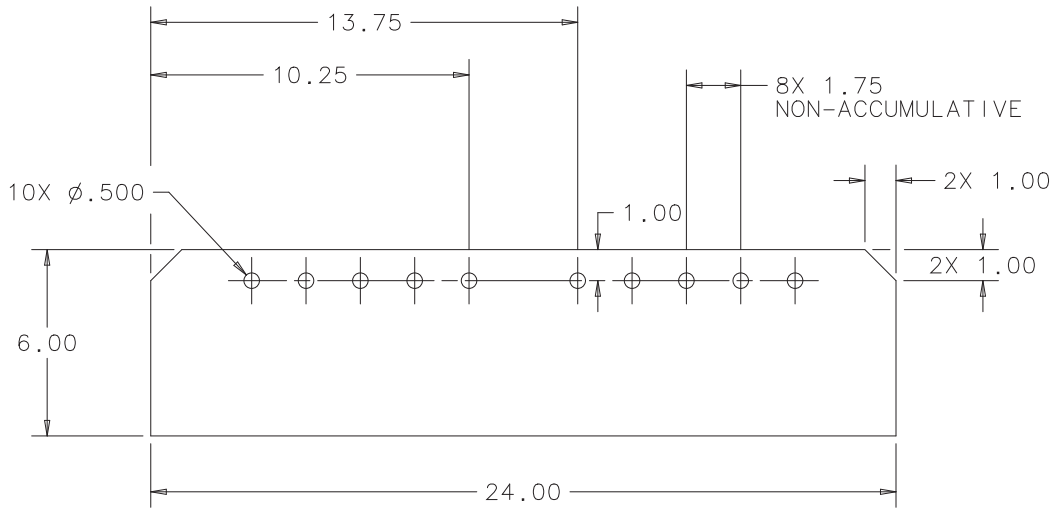

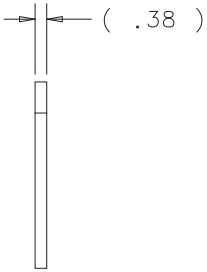

UNLESS OTHERWISE SPECIFIED			ORIGINATOR	J.TILLMAN	20-MAR-2014
.XX	.XXX	ANGLES	DRAWN	J.TILLMAN	20-MAR-2014
± .06	± .02	± ***	CHECKED	J.RAUCH	28-MAR-2014
			APPROVED	J.KILMER	28-MAR-2014

1. BREAK ALL SHARP EDGES .02 MAX.
2. DO NOT SCALE DRAWING.
3. DIMENSIONS BASED UPON ASME Y14.5M-1994
4. MAX. ALL MACH. SURFACES 250
5. DRAWING UNITS: U.S. INCH

USED ON: MD-497421

MATERIAL: ASTM-A36 STEEL OR EQUIVALENT

FERMI NATIONAL ACCELERATOR LABORATORY
UNITED STATES DEPARTMENT OF ENERGY

E974-MICROBOONE - INFRASTRUCTURE SERVICE EQUIPMENT PLATE REAR TURNBKLE MOUNT

SCALE	DRAWING NUMBER	SHEET	REV
1:4 & AS NOTED	3974.110-MB-497426	1 OF 1	

CREATED WITH : Ideas12NXSeries | GROUP: PPD/MECHANICAL DEPARTMENT

NOTICE: IMAGE OBTAINED FROM FERMILAB
Computer Aided Design Group.
This image is an uncontrolled document and may not be the current, approved version.

This information is provided for REFERENCE use only. Not for MANUFACTURE, or DESIGN INFORMATION. All information contained in this document represents work sponsored by an agency of the U.S. Government. Neither the U.S. Government nor any agency thereof, nor Universities Research Association, Inc., nor any of their employees or officers, makes any warranty, express or implied, or assumes any legal liability or responsibility for the accuracy, completeness, or usefulness of any information, apparatus, product or process disclosed, or represents that its use would not infringe privately owned rights.

REV	DESCRIPTION	DRAWN	DATE
		APPROVED	DATE

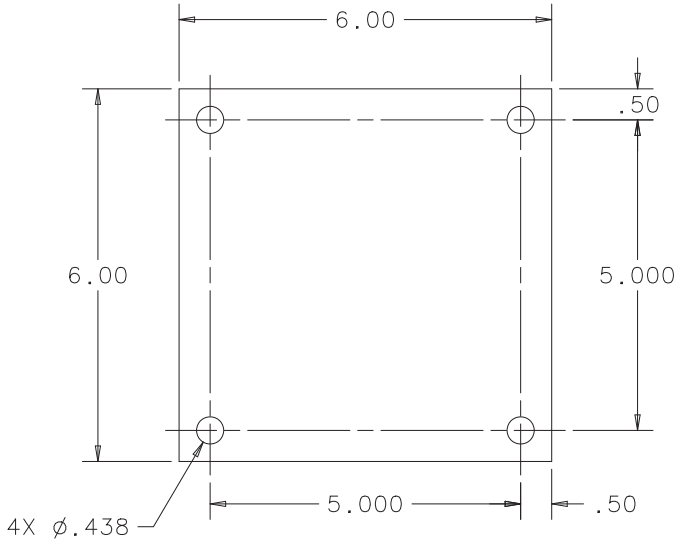

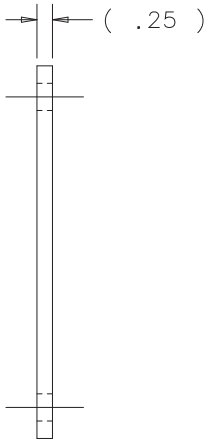

UNLESS OTHERWISE SPECIFIED			ORIGINATOR	J.TILLMAN	20-MAR-2014
.XX	.XXX	ANGLES	DRAWN	J.TILLMAN	20-MAR-2014
± .06	± .032	± ***	CHECKED	J.RAUCH	28-MAR-2014
			APPROVED	J.KILMER	28-MAR-2014

1. BREAK ALL SHARP EDGES .02 MAX.
2. DO NOT SCALE DRAWING.
3. DIMENSIONS BASED UPON ASME Y14.5M-1994
4. MAX. ALL MACH. SURFACES 250
5. DRAWING UNITS: U.S. INCH

USED ON
MD-497421 & MB-497429

MATERIAL
ASTM-A36 STEEL
OR EQUIVALENT

FERMI NATIONAL ACCELERATOR LABORATORY
UNITED STATES DEPARTMENT OF ENERGY

E974-MICROBOONE - INFRASTRUCTURE SERVICE EQUIPMENT PLATE; FLANGE 6X6X250

SCALE	DRAWING NUMBER	SHEET	REV
1:2 & AS NOTED	3974.110-MB-497427	1 OF 1	

CREATED WITH : Ideas12NXSeries | GROUP: PPD/MECHANICAL DEPARTMENT

NOTICE: IMAGE OBTAINED FROM FERMILAB
Computer Aided Design Group.

This image is an uncontrolled document and may not be the current, approved version.

This information is provided for REFERENCE use only. Not for MANUFACTURE, or DESIGN INFORMATION. All information contained in this document represents work sponsored by an agency of the U.S. Government. Neither the U.S. Government nor any agency thereof, nor Universities Research Association, Inc., nor any of their employees or officers, makes any warranty, express or implied, or assumes any legal liability or responsibility for the accuracy, completeness, or usefulness of any information, apparatus, product or process disclosed, or represents that its use would not infringe privately owned rights.

REV	DESCRIPTION	DRAWN	DATE
		APPROVED	DATE

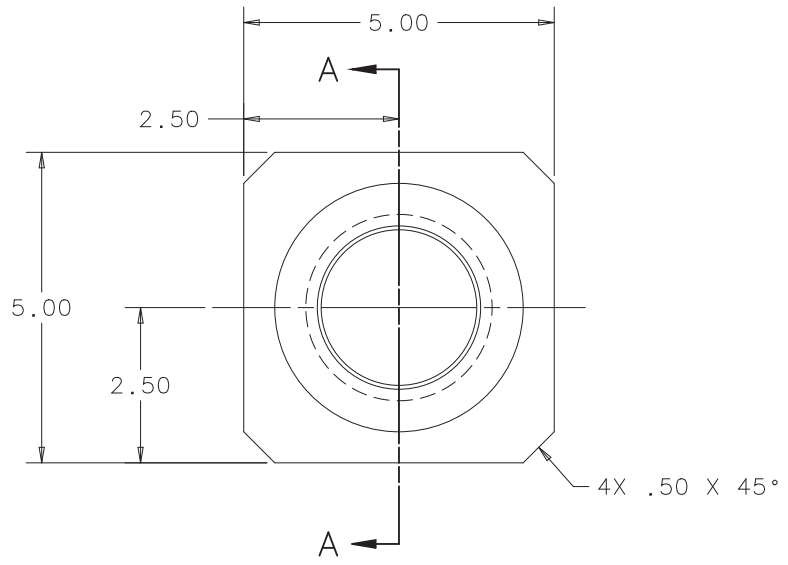

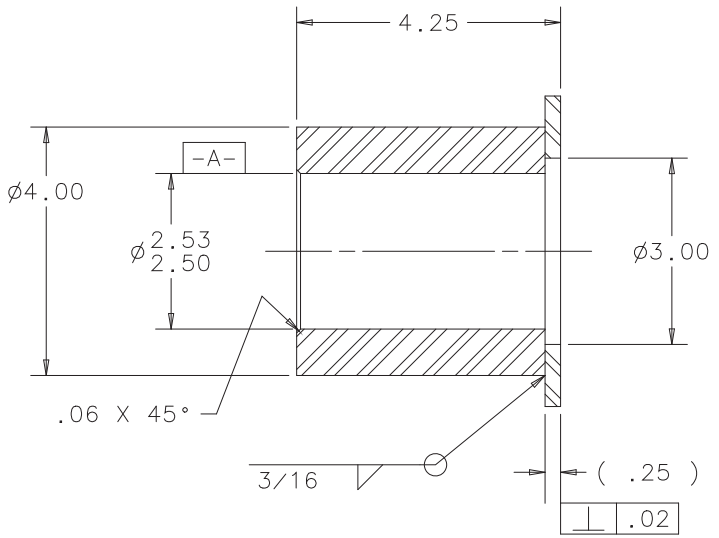

NOTES:

1. ALL WELDMENTS MUST BE IN ACCORDANCE WITH THE STRUCTURAL WELDING CODE ANSI/AWS D1.1.
2. ALL WELDS SHALL BE MADE IN A SEQUENCE THAT WILL BALANCE THE APPLIED HEAT OF WELDING WHILE THE WELDING PROGRESSES. THE PROCEDURE AND SEQUENCE SHALL BE SUCH AS WILL MINIMIZE DISTORTION AND SHRINKAGE.
3. ALL WELD METALS ARE E70XX UNLESS OTHERWISE SPECIFIED.
4. CLEAN AND DEGREASE WELDMENT PRIOR TO PAINTING. PRIME ALL SURFACES (OTHER THAN INSIDE DIAMETER) WITH FLAT WHITE 1600 SYSTEM MULTI-PURPOSE ENAMEL RUSTOLEUM PRIMER OR EQUIVALENT.
5. APPROXIMATE WEIGHT: 10 LBS.

NOTICE: IMAGE OBTAINED FROM FERMILAB
Computer Aided Design Group.
This image is an uncontrolled document and may not be the current, approved version.
This information is provided for REFERENCE use only. Not for MANUFACTURE, or DESIGN INFORMATION. All information contained in this document represents work sponsored by an agency of the U.S. Government. Neither the U.S. Government nor any agency thereof, nor Universities Research Association, Inc., nor any of their employees or officers, makes any warranty, express or implied, or assumes any legal liability or responsibility for the accuracy, completeness, or usefulness of any information, apparatus, product or process disclosed, or represents that its use would not infringe privately owned rights.

UNLESS OTHERWISE SPECIFIED			ORIGINATOR	J.TILLMAN	20-MAR-2014
.XX	.XXX	ANGLES	DRAWN	J.TILLMAN	20-MAR-2014
± .06	± ***	± ***	CHECKED	J.RAUCH	28-MAR-2014
			APPROVED	J.KILMER	28-MAR-2014

1. BREAK ALL SHARP EDGES .02 MAX.
2. DO NOT SCALE DRAWING.
3. DIMENSIONS BASED UPON ASME Y14.5M-1994
4. MAX. ALL MACH. SURFACES 250
5. DRAWING UNITS: U.S. INCH

USED ON: MD-493430

MATERIAL: SEE PARTS LIST ABOVE

FERMI NATIONAL ACCELERATOR LABORATORY
UNITED STATES DEPARTMENT OF ENERGY

E974-MICROBOONE - INFRASTRUCTURE SERVICE EQUIPMENT UBOONE SSV SPRING SUP. SOCKET

SCALE	DRAWING NUMBER	SHEET	REV
1:2 & AS NOTED	3974.110-MB-497428	1 OF 1	

CREATED WITH : Ideas12NXSeries | GROUP: PPD/MECHANICAL DEPARTMENT

REV	DESCRIPTION	DRAWN	DATE
		APPROVED	DATE

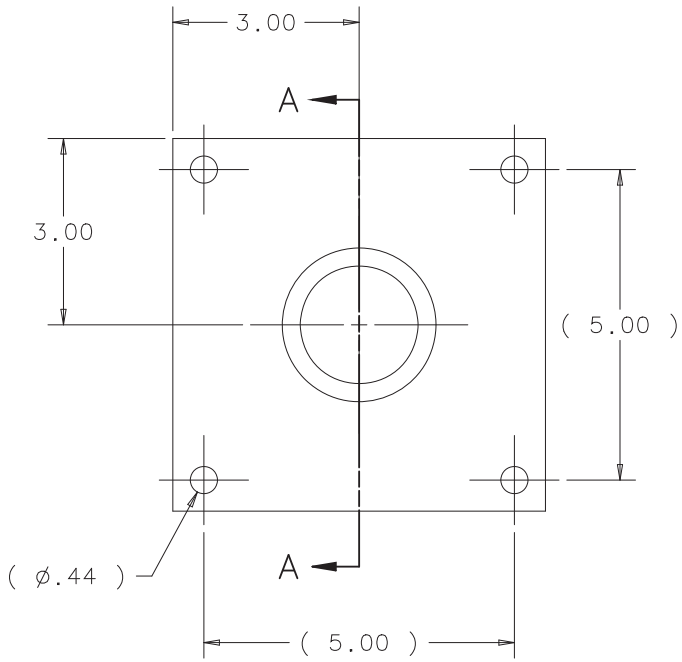

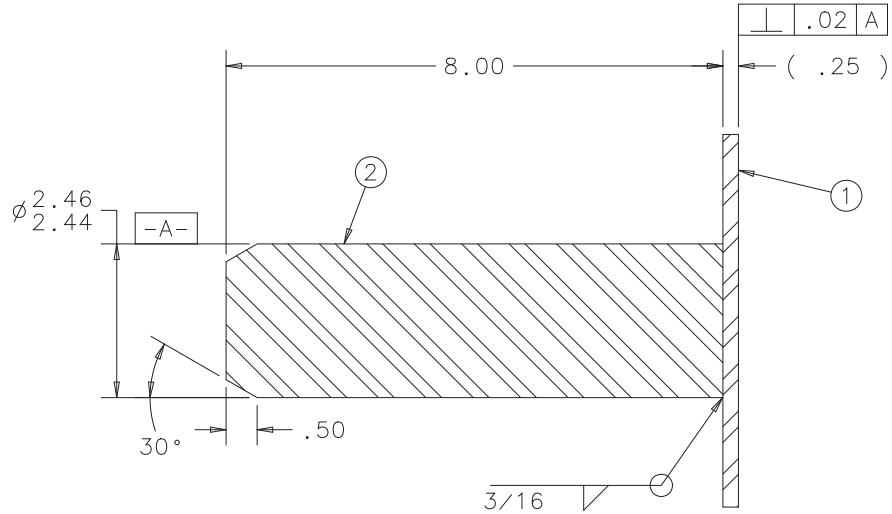

ITEM	PART NO.	DESCRIPTION OR SIZE	QTY.
2	COML	BAR, ø2.50 ROUND; LOW CARBON H.R.	1
1	MB-497427	PLATE FLANGE 6X6X250	1

PARTS LIST

UNLESS OTHERWISE SPECIFIED					
.XX	.XXX	ANGLES	ORIGINATOR	J.TILLMAN	20-MAR-2014
± .03	± ***	± ***	DRAWN	J.TILLMAN	20-MAR-2014
			CHECKED	J.RAUCH	28-MAR-2014
			APPROVED	J.KILMER	28-MAR-2014

1. BREAK ALL SHARP EDGES .02 MAX.
2. DO NOT SCALE DRAWING.
3. DIMENSIONS BASED UPON ASME Y14.5M-1994
4. MAX. ALL MACH. SURFACES 250
5. DRAWING UNITS: U.S. INCH

USED ON: MD-493430

MATERIAL: SEE PARTS LIST ABOVE

FERMI NATIONAL ACCELERATOR LABORATORY
UNITED STATES DEPARTMENT OF ENERGY

E974-MICROBOONE - INFRASTRUCTURE SERVICE EQUIPMENT
UBOONE SSV SPRING SUP. PIN ASSY

SCALE	DRAWING NUMBER	SHEET	REV
1:2 & AS NOTED	3974.110-MB-497429	1 OF 1	

CREATED WITH : Ideas12NXSeries | GROUP: PPD/MECHANICAL DEPARTMENT

NOTES:

1. ALL WELDMENTS MUST BE IN ACCORDANCE WITH THE STRUCTURAL WELDING CODE ANSI/AWS D1.1.
2. ALL WELDS SHALL BE MADE IN A SEQUENCE THAT WILL BALANCE THE APPLIED HEAT OF WELDING WHILE THE WELDING PROGRESSES. THE PROCEDURE AND SEQUENCE SHALL BE SUCH AS WILL MINIMIZE DISTORTION AND SHRINKAGE.
3. ALL WELD METALS ARE E70XX UNLESS OTHERWISE SPECIFIED.
4. CLEAN AND DEGREASE WELDMENT PRIOR TO PAINTING. PRIME ALL SURFACES (OTHER THAN ITEM 2) WITH FLAT WHITE 1600 SYSTEM MULTI-PURPOSE ENAMEL RUSTOLEUM PRIMER OR EQUIVALENT.
5. APPROXIMATE WEIGHT: 15 LBS.

NOTICE: IMAGE OBTAINED FROM FERMILAB
Computer Aided Design Group.
This image is an uncontrolled document and may not be the current, approved version.

This information is provided for REFERENCE use only. Not for MANUFACTURE, or DESIGN INFORMATION. All information contained in this document represents work sponsored by an agency of the U.S. Government. Neither the U.S. Government nor any agency thereof, nor Universities Research Association, Inc., nor any of their employees or officers, makes any warranty, express or implied, or assumes any legal liability or responsibility for the accuracy, completeness, or usefulness of any information, apparatus, product or process disclosed, or represents that its use would not infringe privately owned rights.

REV	DESCRIPTION	DRAWN	DATE
		APPROVED	DATE

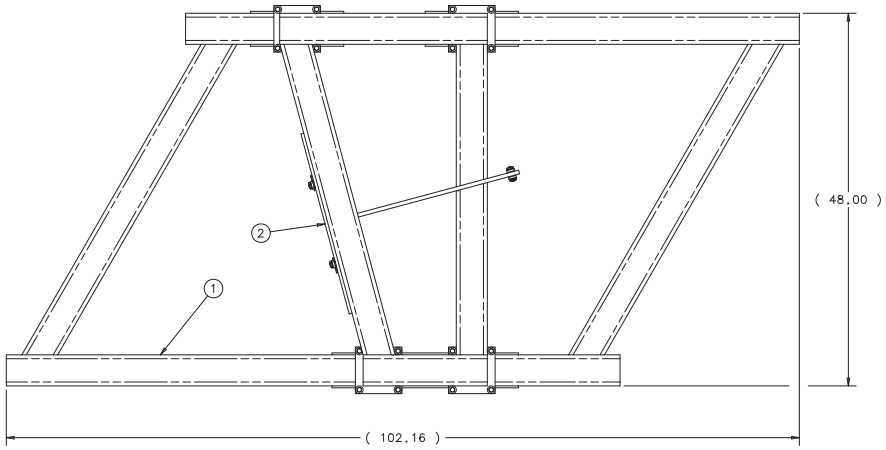

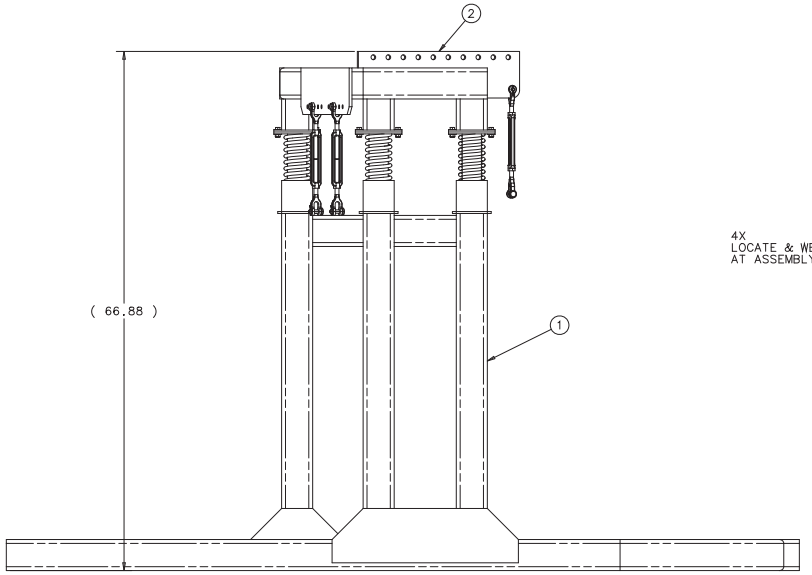

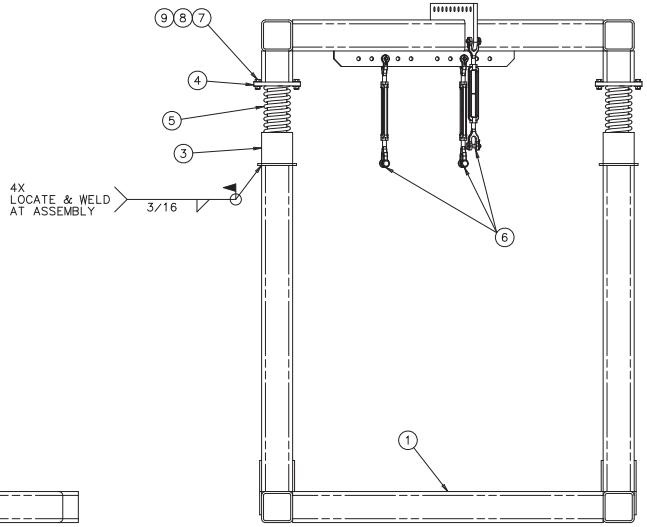

ITEM	PART NO.	DESCRIPTION OR SIZE	QTY.
9	COML	WASHER, 3/8" TYPE A SAE MCMASTER CARR: 90126A031	1 PK
8	COML	HEX NUT, 3/8-16; GR 2 MCMASTER CARR: 90473A031	1 PK
7	COML	HHCS, 3/8-16 X 1.00; GR 2 MCMASTER CARR: 91309A624	1 PK
6	COML	TURNBUCKLE; .43 PIN X 13.50 LG; 2200LB MAX CAP. MCMASTER CARR: 3001T54	3
5	COML	COMPRESSION SPRING; 3.406 O.D. X .437" WIRE DIA X 6" LG MCMASTER CARR: 96485K276	4
4	MB-497429	UBOONE SSV SPRING SUP. PIN ASSY	4
3	MB-497428	UBOONE SSV SPRING SUP. SOCKET ASSY	4
2	MD-497421	CRYOSTAT VENT SUP. UPPER ASSY	1
1	MD-497417	CRYOSTAT VENT SUP. LOWER ASSY	1

PARTS LIST

UNLESS OTHERWISE SPECIFIED			ORIGINATOR	J.TILLMAN	20-MAR-2014
.XX	.XXX	ANGLES	DRAWN	J.TILLMAN	20-MAR-2014
± ***	± ***	± ***	CHECKED	J.RAUCH	28-MAR-2014
			APPROVED	J.KILMER	28-MAR-2014

1. BREAK ALL SHARP EDGES *** MAX.
2. DO NOT SCALE DRAWING.
3. DIMENSIONS BASED UPON ASME Y14.5M-1994
4. MAX. ALL MACH. SURFACES ***
5. DRAWING UNITS: U.S. INCH

USED ON

MATERIAL: SEE PARTS LIST ABOVE

FERMI NATIONAL ACCELERATOR LABORATORY
UNITED STATES DEPARTMENT OF ENERGY

E974-MICROBOONE - INFRASTRUCTURE SERVICE EQUIPMENT
CRYOSTAT VENT SUPPORT ASSY

SCALE	DRAWING NUMBER	SHEET	REV
1:8 & AS NOTED	3974.110-MD-497430	1 OF 2	

CREATED WITH : Ideas12NXSeries | GROUP: PPD/MECHANICAL DEPARTMENT

NOTES:
1. ALL WELDMENTS MUST BE IN ACCORDANCE WITH THE STRUCTURAL WELDING CODE ANSI/AWS D1.1.
2. ALL WELDS SHALL BE MADE IN A SEQUENCE THAT WILL BALANCE THE APPLIED HEAT OF WELDING WHILE THE WELDING PROGRESSES. THE PROCEDURE AND SEQUENCE SHALL BE SUCH AS WILL MINIMIZE DISTORTION AND SHRINKAGE.
3. ALL WELD METALS ARE E70XX UNLESS OTHERWISE SPECIFIED.
4. APPROXIMATE WEIGHT: 900 LBS.

NOTICE: IMAGE OBTAINED FROM FERMILAB WEB SITE
This information is provided for REFERENCE use only. Not for MANUFACTURE, or DESIGN INFORMATION. All information contained in this document represents work sponsored by an agency of the U.S. Government. Neither the U.S. Government nor any agency thereof, nor Universities Research Association, Inc., nor any of their employees or officers, makes any warranty, express or implied, or assumes any legal liability or responsibility for the accuracy, completeness, or usefulness of any information, apparatus, product or process disclosed, or represents that its use would not infringe privately owned rights.

REV	DESCRIPTION	DRAWN	DATE
		APPROVED	DATE

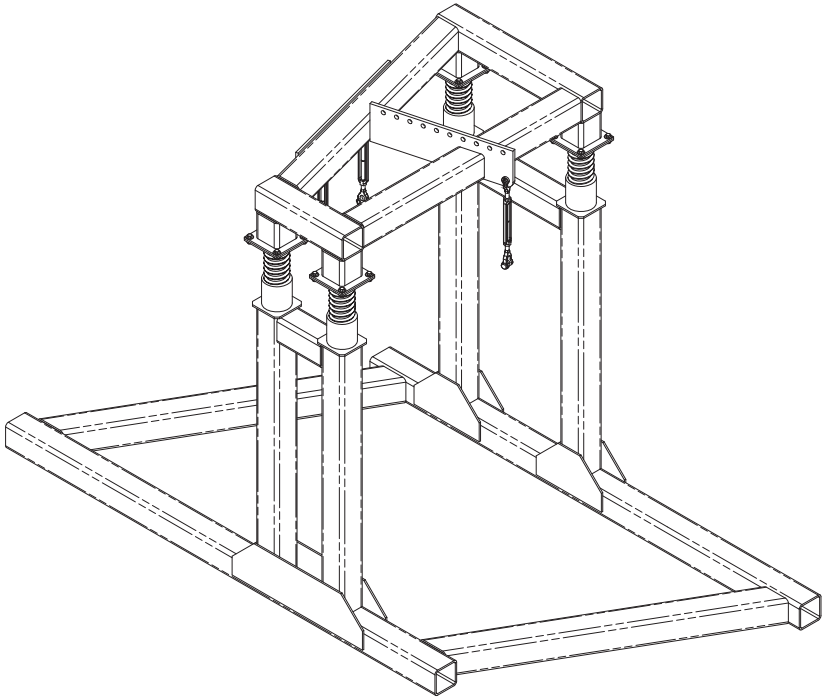

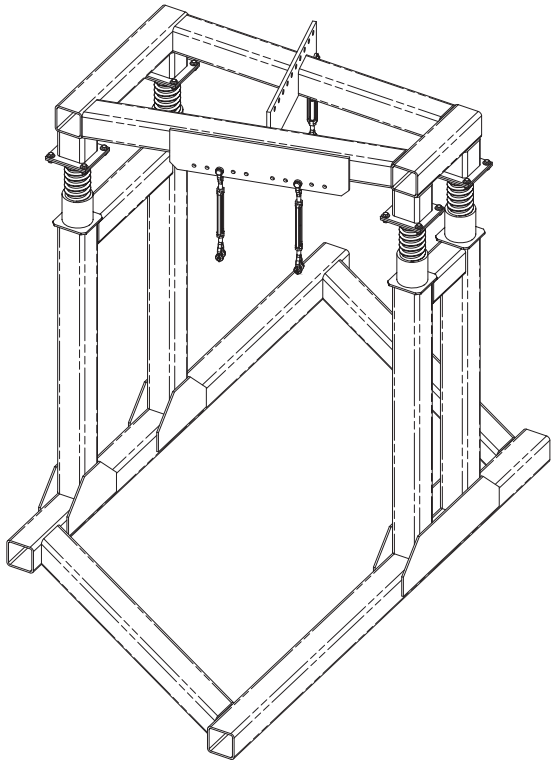

UNLESS OTHERWISE SPECIFIED			ORIGINATOR	J.TILLMAN	20-MAR-2014
.XX	.XXX	ANGLES	DRAWN	J.TILLMAN	20-MAR-2014
± ***	± ***	± ***	CHECKED	J.RAUCH	28-MAR-2014
1. BREAK ALL SHARP EDGES *** MAX. 2. DO NOT SCALE DRAWING. 3. DIMENSIONS BASED UPON ASME Y14.5M-1994 4. MAX. ALL MACH. SURFACES *** 5. DRAWING UNITS:U.S.INCH			APPROVED	J.KILMER	28-MAR-2014
			USED ON		
			MATERIAL	SEE PARTS LIST ABOVE	

FERMI NATIONAL ACCELERATOR LABORATORY
UNITED STATES DEPARTMENT OF ENERGY

NOTICE: IMAGE OBTAINED FROM FERMILAB WEB SITE
This information is provided for REFERENCE use only.
Not for MANUFACTURE, or DESIGN INFORMATION.
All information contained in this document represents work sponsored by an agency of the U.S. Government.
Neither the U.S. Government nor any agency thereof, nor Universities Research Association, Inc., nor any of their employees or officers, makes any warranty, express or implied, or assumes any legal liability or responsibility for the accuracy, completeness, or usefulness of any information, apparatus, product or process disclosed, or represents that its use would not infringe privately owned rights.

E974-MICROBOONE - INFRASTRUCTURE SERVICE EQUIPMENT CRYOSTAT VENT SUPPORT ASSY

SCALE	DRAWING NUMBER	SHEET	REV
1:8 & AS NOTED	3974.110-MD-497430	2 OF 2	

CREATED WITH : Ideas12NXSeries | GROUP: PPD/MECHANICAL DEPARTMENT