SDRC I-DEAS VI: FE_Modeling_&_Analysis 14-JUL-92 15:18:56

Database: bridge
View : No stored View
Task: Post Processing
Model: 2-FE MODEL2

Units : IN
Display : No stored Option
Model Bin: 1-MAIN
Associated Workset: 2-WORKING_SET2

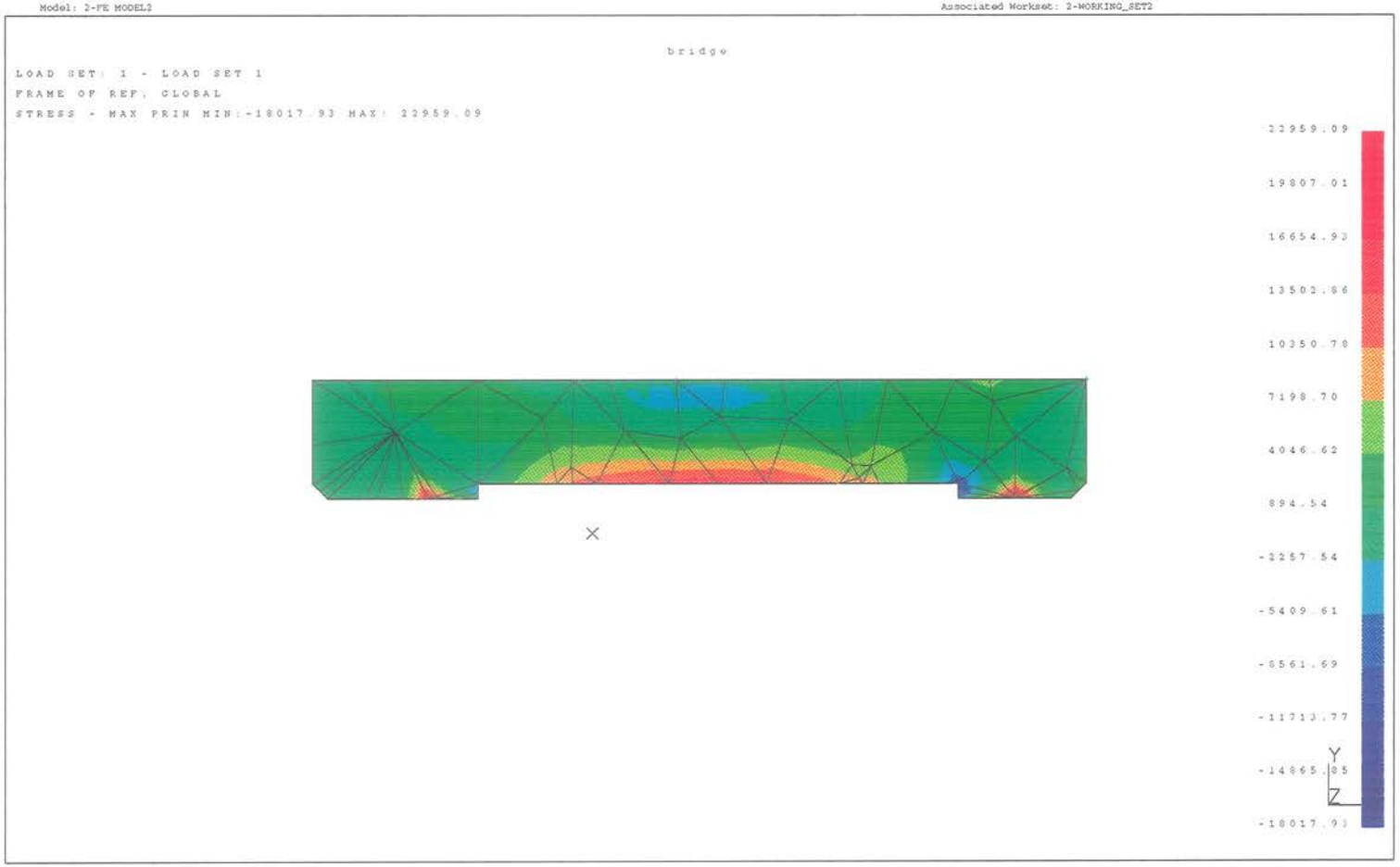

Cross-section at center

Situation: A Central Arch of the main collider at CDF exerts 100 Tons of force per Hilman Roller. When the arch is rolled out of the Collider, it must cross a ~9" gap. This gap will be filled with a 2" thick x 15" wide steel plate. Because of the Muon chambers located under the bridging steel, a special milled out notch must be cut in the steel bridge. This notch will be 1/4" deep. Because the actual gap varies in width, 8 individual plates will be manufactured. The bridge steel is supported by a steel ledge 2" thick on both sides.

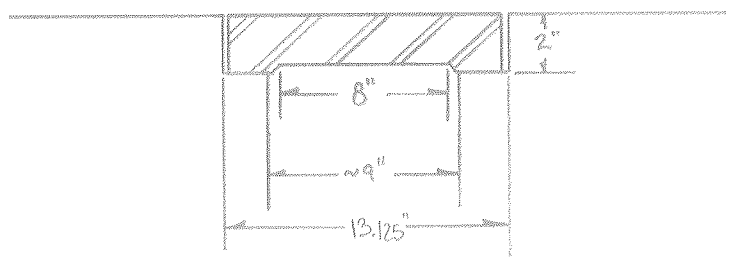

Determination of Plate Load:

The Hilman Roller exerts 100 Tons of force onto the floor and steel bridge. Because of the length of the roller, all of the load is NOT acting directly onto the steel bridge. Therefore, the actual load on the bridge must be determined.

If the Hilman load spans the entire steel bridge, then the supporting ledges will see the entire load. However, if the Hilman does not cross the entire steel bridge (i.e. is not directly supported by one ledge) then the steel bridge itself is forced to carry a large portion of the load.

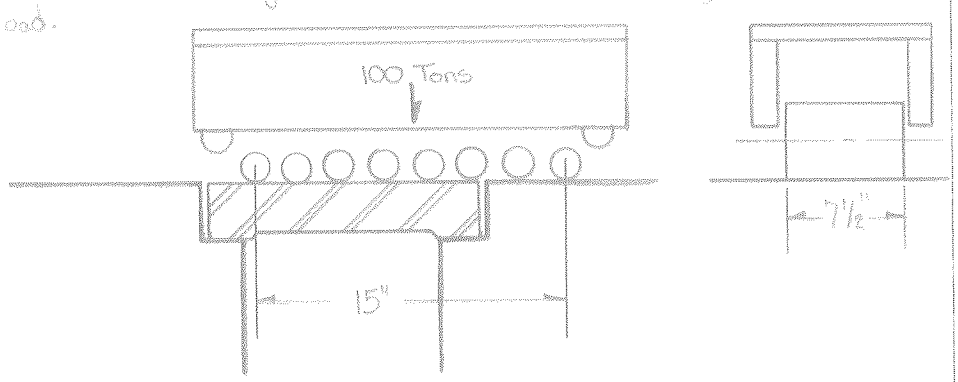

The Hilman Roller exerts how much pressure?

$$P = \frac{200{,}000 \text{ lbs}}{(15'' \times 7.5'')} = 1778 \text{ psi}$$

This means that 149,934 lbs is applied to the steel bridge, and 50,066 lbs is applied to the floor.

A Finite Element Stress Analysis shows that for the longest span, the maximum prisipal stress is: 22,959 psi.

The maximum deflection through the center of this plate is: .0044"

The allowable stress for a rectangular plate bent about it's minor axis is:

$$F_b = .75 F_y$$

$$F_b = (.75)(36,000 psi) = 27,000 psi$$

The worst stressed plate has a maximum stress less than the maximum allowable stress. Therefore the plates are adequate.

SDRC I-DEAS VI: FE_Modeling_&_Analysis 14-JUL-92 15:17:26

Database: bridge
View : No stored View
Task: Post Processing
Model: 2-FE MODEL2

Units : IN
Display : No stored Option
Model Bin: 1-MAIN
Associated Workset: 2-WORKING_SET2

bridge

LOAD SET: 1 - LOAD SET 1
FRAME OF REF: GLOBAL
STRESS - MAX PRIN MIN: -18017.93 MAX: 22959.09

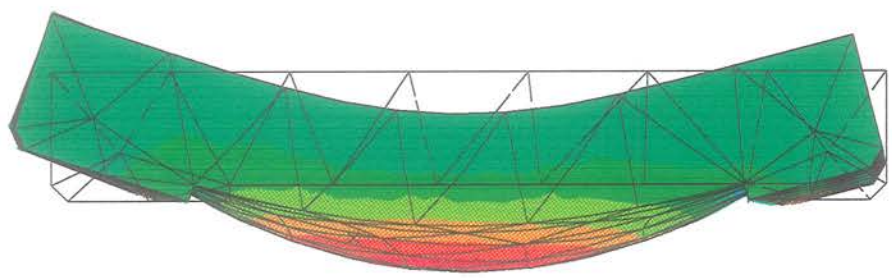

22959.09
19807.01
16654.93
13502.86
10350.78
7198.70
4046.62
894.54
-2257.54
-5409.61
-8561.69
-11713.77
-14865.85
-18017.93

Y
Z

SDRC I-DEAS VI: FE_Modeling_&_Analysis 15-JUL-92 08:49:44

Database: bridge
View : No stored View
Task: Post Processing
Model: 2-FE MODEL2

Units : IN
Display : No stored Option
Model Bin: 1-MAIN
Associated Workset: 2-WORKING_SET2

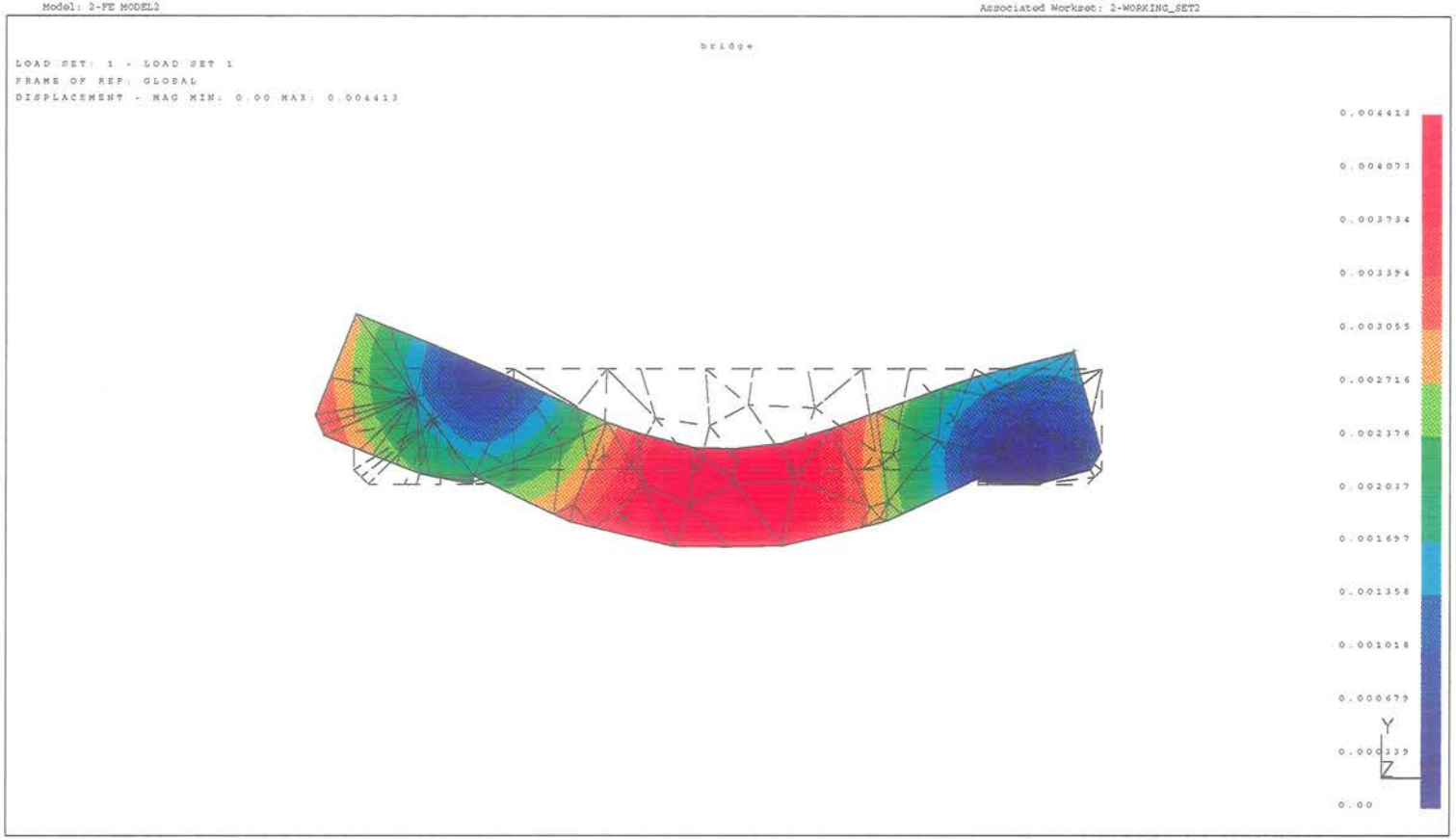

Cross-Section at Center

SDRC I-DEAS VI: FE_Modeling_&_Analysis 14-JUL-92 15:15:55

Database: bridge
View : No stored View
Task: Post Processing
Model: 2-FE MODEL2

Units : IN
Display : No stored Option
Model Bin: 1-MAIN
Associated Workset: 2-WORKING_SET2

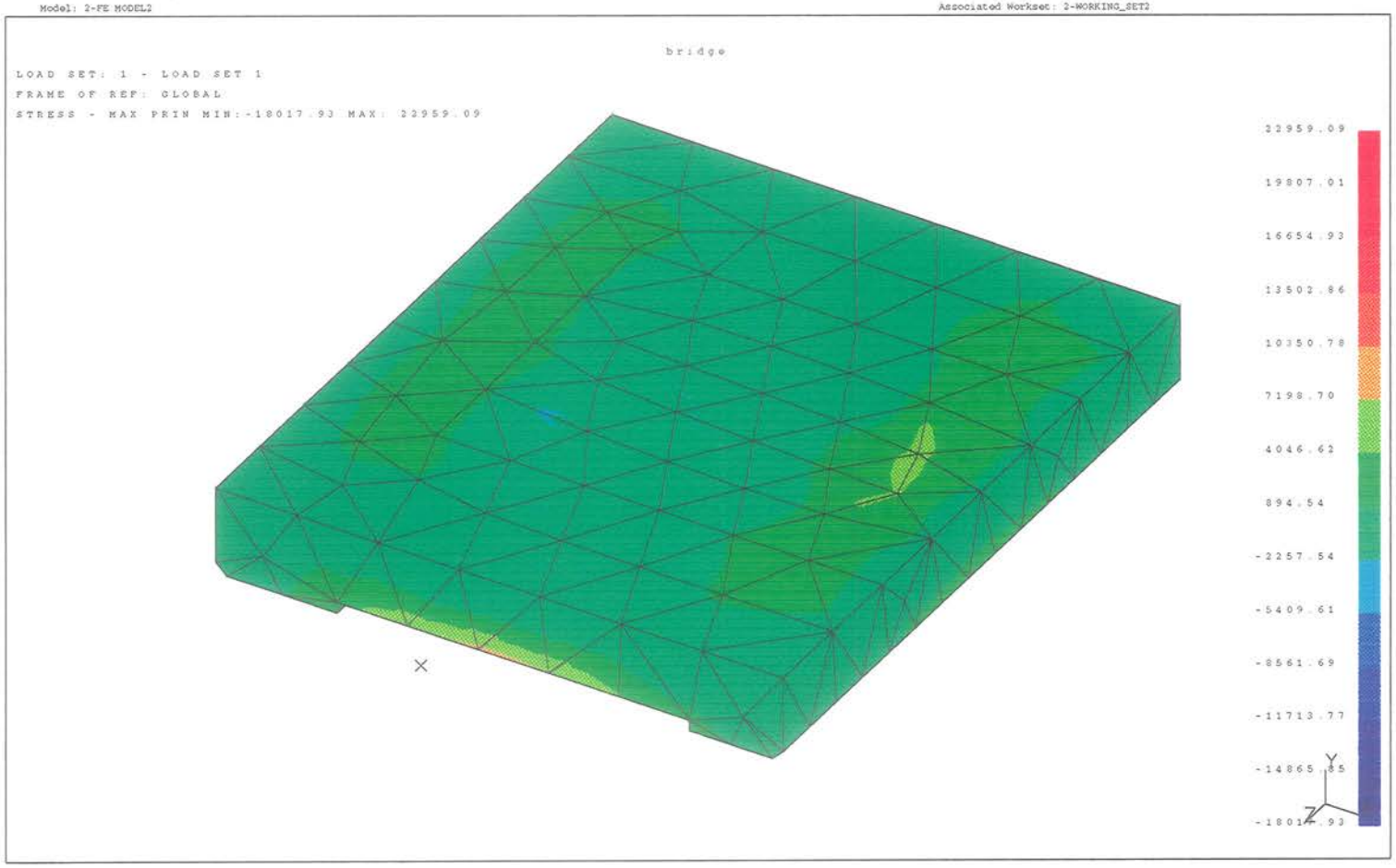

SDRC I-DEAS VI: FE_Modeling_&_Analysis 14-JUL-92 15:14:55

Database: bridge
View : No stored View
Task: Post Processing
Model: 2-FE MODEL2

Units : IN
Display : No stored Option
Model Bin: 1-MAIN
Associated Workset: 2-WORKING_SET2

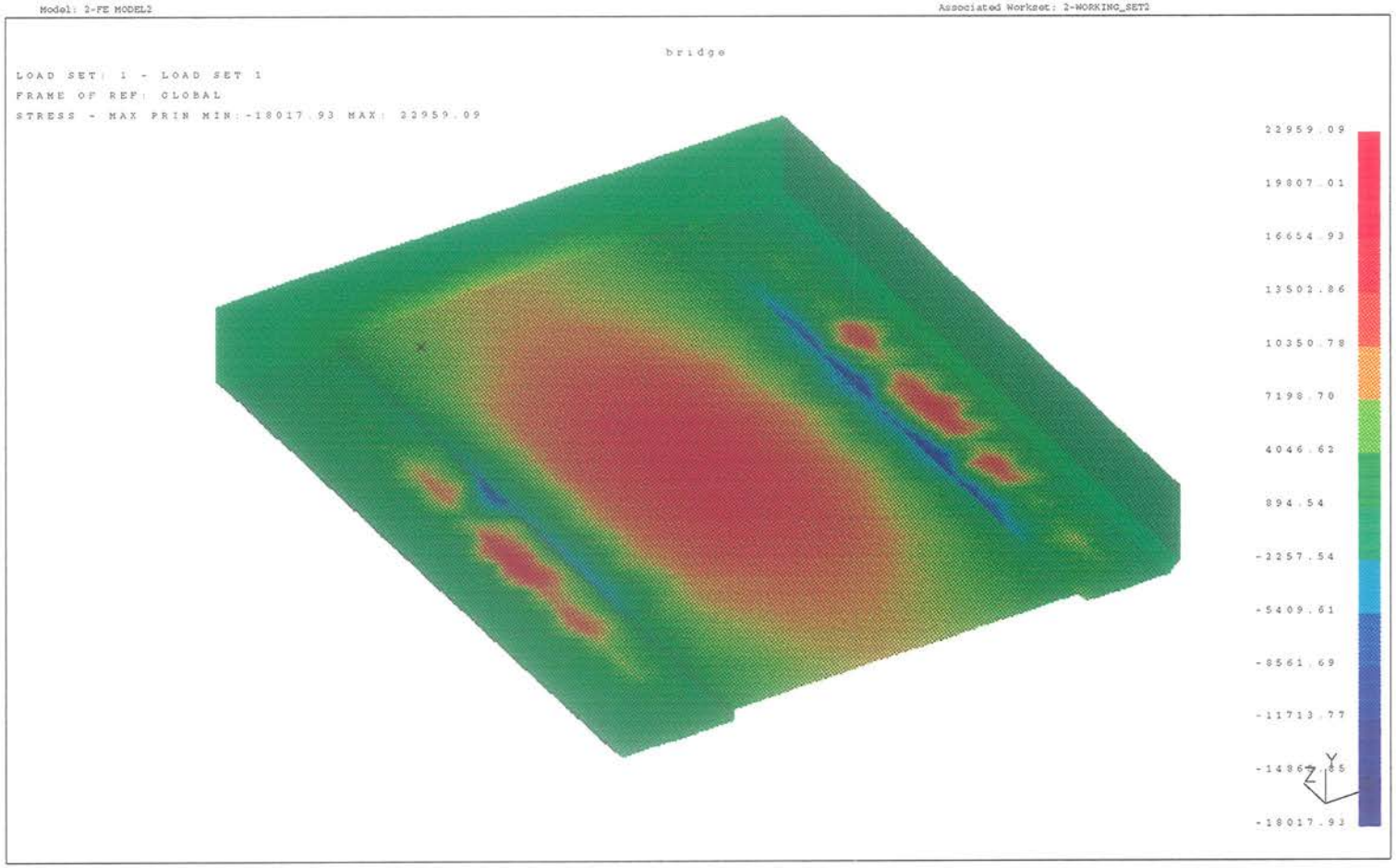

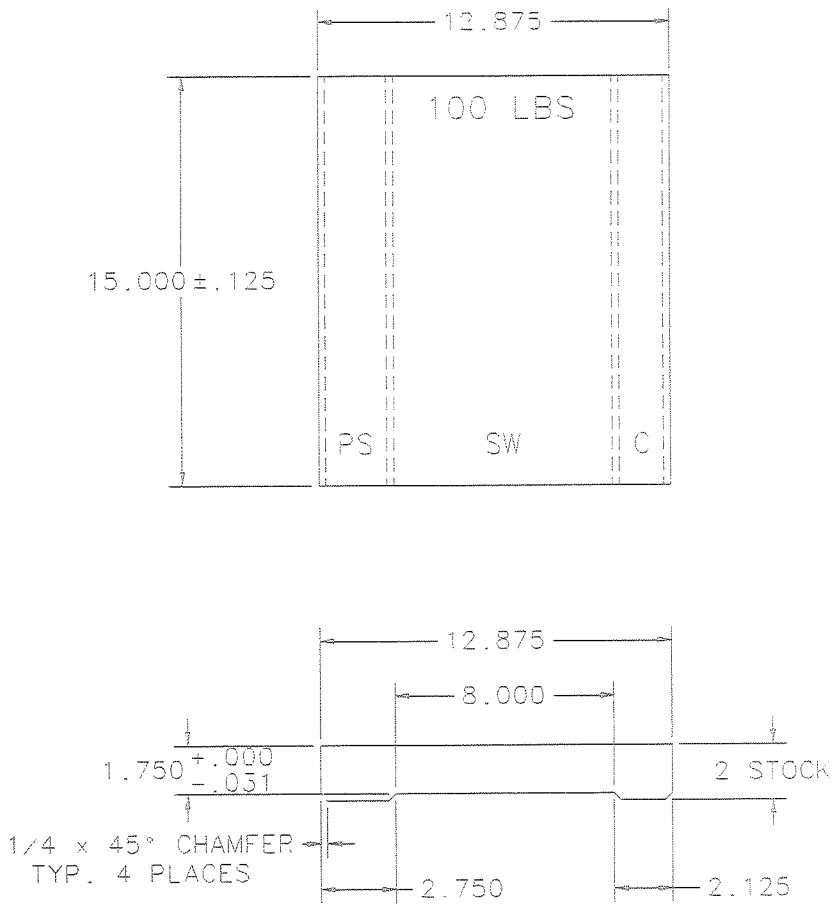

REV.	DESCRIPTION	DRAWN	DATE
		APPD.	DATE

ITEM NO.	PART NO.	DESCRIPTION OR SIZE	QTY. REQ.

PARTS LIST

UNLESS OTHERWISE SPECIFIED			ORIGINATOR	J GRIMSON	MAR 92
FRACTIONS	DECIMAL	ANGLES	DRAWN	D MITCHELL	4/6/92
± ---	± .063	± 5°	CHECKED		
			APPPOVED		

1. BREAK ALL SHARP EDGES 1/64 MAX.
2. DO NOT SCALE DWG.
3. DIMENSIONING IN ACCORD WITH ANSI Y14.5 STD'S

125 MAX. ALL MACHINED SURFACES

USED ON

MATERIAL- A36 STEEL

FERMI NATIONAL ACCELERATOR LABORATORY
UNITED STATES DEPARTMENT OF ENERGY

SOUTH WEST ARCH BRIDGE
CDF COLLIDER
RD/MECH DEPARTMENT

SCALE	DRWG SIZE	DRAWING NUMBER	REV.
1:4	B	REFERENCE ONLY	

IDEAS LEVEL 6.0 USERNAME: DMITCHEL RDM002

CADFILE:

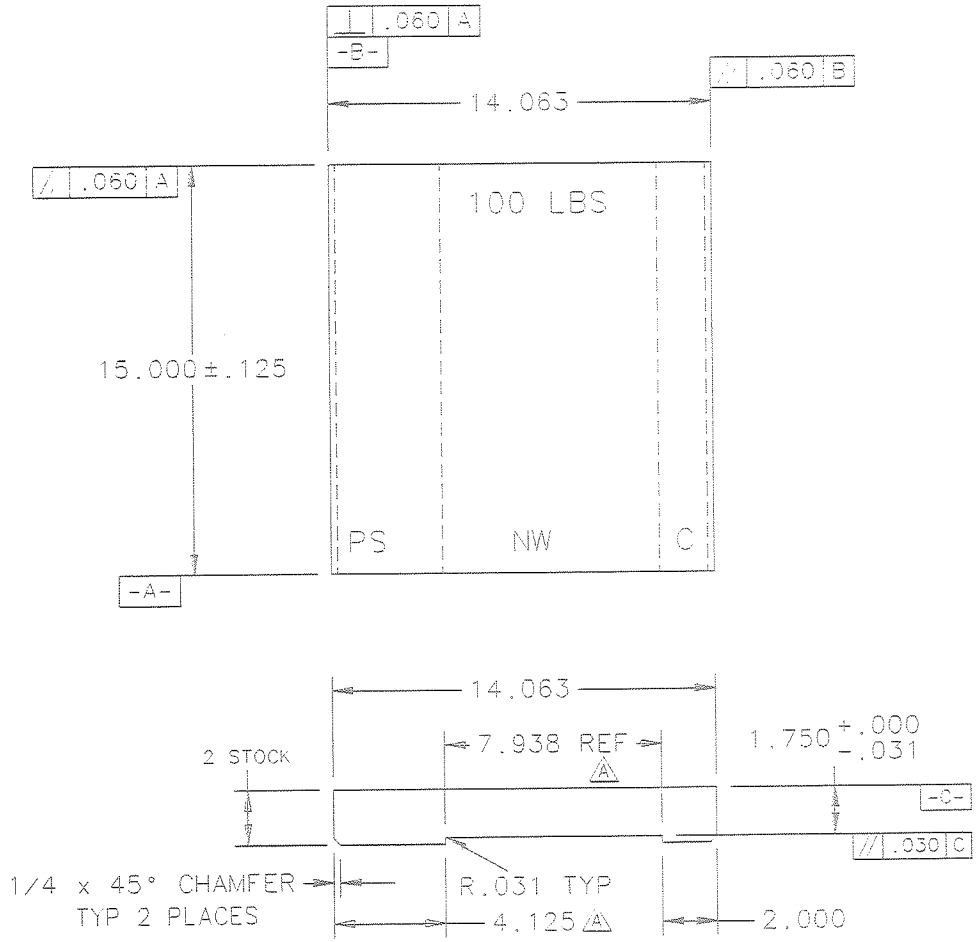

NOTE: Lettering on top view to be stenciled on plate

REV.	DESCRIPTION	DRAWN / APPD.	DATE / DATE
A	Relief narrowed by 3/4"	DMITCHELL	4/8/92

ITEM NO.	PART NO.	DESCRIPTION OR SIZE	QTY. REQ.

PARTS LIST

UNLESS OTHERWISE SPECIFIED			ORIGINATOR	J. GRIMSON	MAR 92
FRACTIONS	DECIMAL	ANGLES	DRAWN	D. MITCHELL	4/6/92
± ---	±.063	± 5°	CHECKED	V. VILLEGAS	4/7/92
			APPPOVED	D. MITCHELL	4/8/92

1. BREAK ALL SHARP EDGES 1/64 MAX.
2. DO NOT SCALE DWG.
3. DIMENSIONING IN ACCORD WITH ANSI Y14.5 STD'S

125 MAX. ALL MACHINED SURFACES

USED ON

MATERIAL- A36 STEEL

FERMI NATIONAL ACCELERATOR LABORATORY
UNITED STATES DEPARTMENT OF ENERGY

NORTH WEST ARCH BRIDGE
CDF COLLIDER
RD/MECH DEPARTMENT

SCALE	DRWG SIZE	DRAWING NUMBER	REV.
1:4	B	2563.9-MB-297717	A

IDEAS LEVEL 6.0 | USERNAME: DMITCHEL

CADFILE:

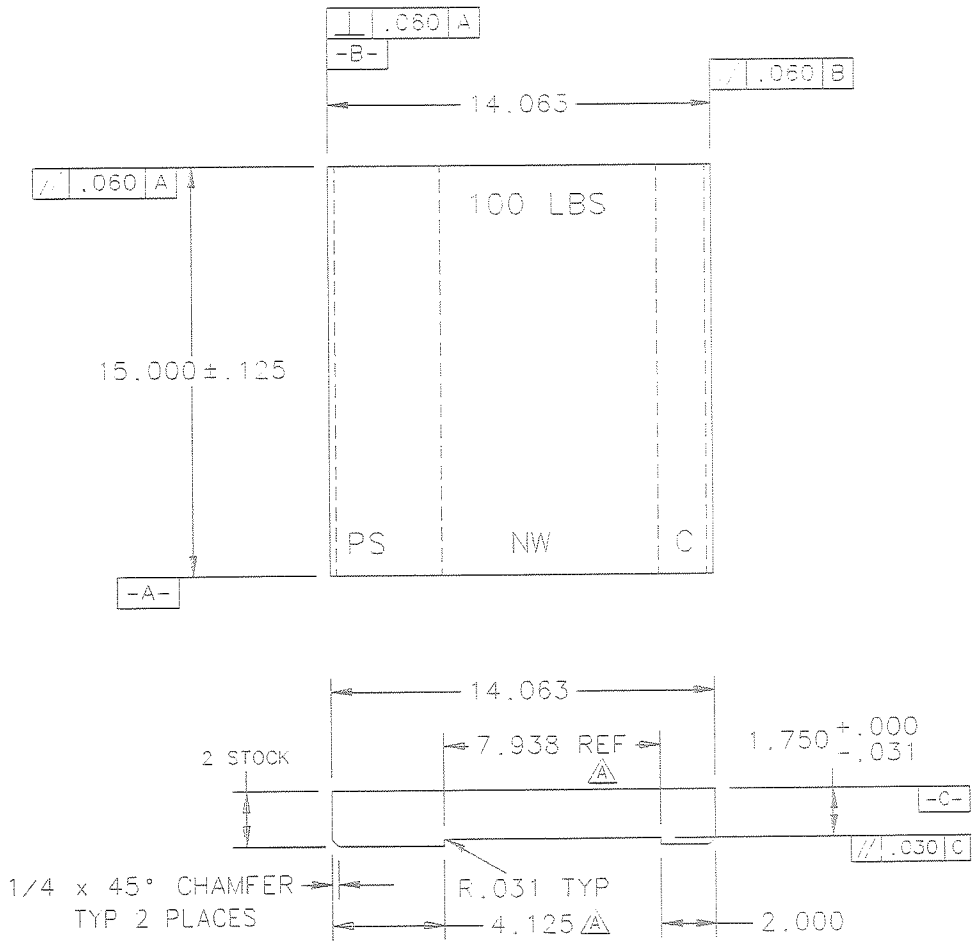

NOTE: Lettering on top view to be stenciled on plate

REV.	DESCRIPTION	DRAWN / APPD.	DATE / DATE
A	Relief narrowed by 3/4"	DMITCHELL	4/8/92

ITEM NO.	PART NO.	DESCRIPTION OR SIZE	QTY. REQ.

PARTS LIST

UNLESS OTHERWISE SPECIFIED					
FRACTIONS	DECIMAL	ANGLES	ORIGINATOR	J. GRIMSON	MAR 92
± ---	± .063	± 5°	DRAWN	D. MITCHELL	4/6/92
			CHECKED	V. VILLEGAS	4/7/92
			APPPOVED	D. MITCHELL	4/8/92

1. BREAK ALL SHARP EDGES 1/64 MAX.
2. DO NOT SCALE DWG.
3. DIMENSIONING IN ACCORD WITH ANSI Y14.5 STD'S

125 MAX. ALL MACHINED SURFACES

USED ON

MATERIAL- A36 STEEL

FERMI NATIONAL ACCELERATOR LABORATORY
UNITED STATES DEPARTMENT OF ENERGY

NORTH WEST ARCH BRIDGE
CDF COLLIDER
RD/MECH DEPARTMENT

SCALE	DRWG SIZE	DRAWING NUMBER	REV.
1:4	B	2563.9-MB-297717	A

IDEAS LEVEL 6.0 | USERNAME: DMITCHEL

CADFILE:

REV.	DESCRIPTION	DRAWN	DATE
		APPD.	DATE

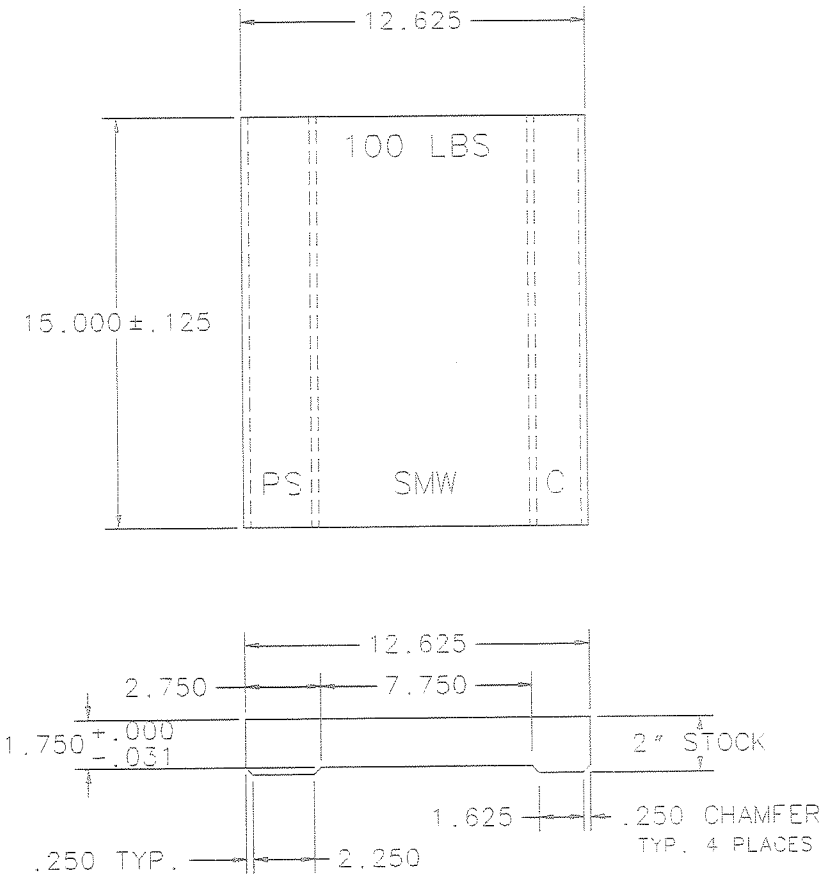

NOTE: Lettering to be stenciled on plate

ITEM NO.	PART NO.	DESCRIPTION OR SIZE	QTY. REQ.

PARTS LIST

UNLESS OTHERWISE SPECIFIED			ORIGINATOR	J. GRIMSON	MAR 92
FRACTIONS	DECIMAL	ANGLES	DRAWN	D. MITCHELL	1/04/92
± ---	± .063	± .5°	CHECKED		
			APPPOVED		

1. BREAK ALL SHARP EDGES 1/64 MAX.
2. DO NOT SCALE DWG.
3. DIMENSIONING IN ACCORD WITH ANSI Y14.5 STD'^S

125 MAX. ALL MACHINED SURFACES

USED ON

MATERIAL- A36 STEEL

FERMI NATIONAL ACCELERATOR LABORATORY
UNITED STATES DEPARTMENT OF ENERGY

SOUTH MIDDLE WEST ARCH BRIDGE
CDF COLLIDER
RD/MECH DEPARTMENT

SCALE	DRWG SIZE	DRAWING NUMBER	REV.
1 : 4	B	REFERENCE ONLY	

IDEAS LEVEL 6.0 USERNAME: DMITCHEL

CADFILE:

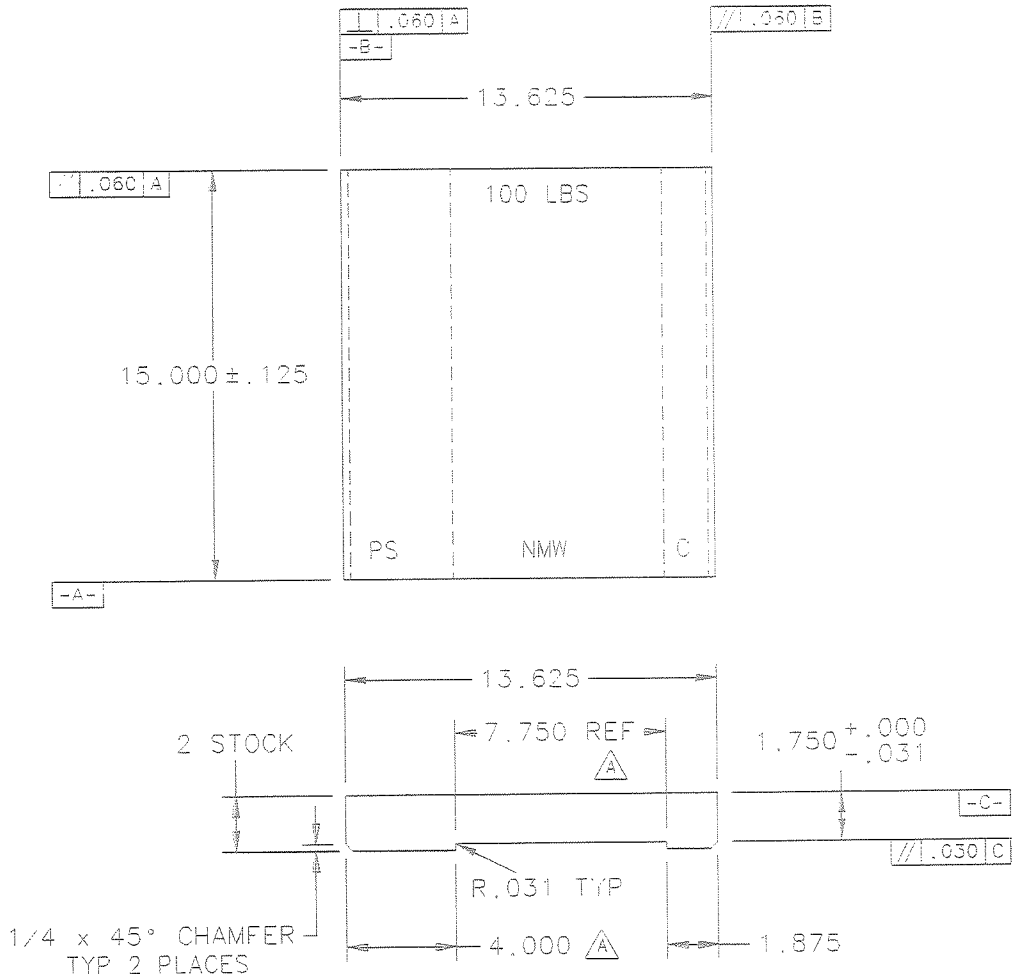

NOTE: Lettering on top view to be stenciled on plate

REV.	DESCRIPTION	DRAWN / APPD.	DATE / DATE
A	Relief narrowed by 3/4"	DMITCHELL	4/8/92

ITEM NO.	PART NO.	DESCRIPTION OR SIZE	QTY. REQ.

PARTS LIST

UNLESS OTHERWISE SPECIFIED			ORIGINATOR	J. GRIMSON	MAR 92
FRACTIONS	DECIMAL	ANGLES	DRAWN	D. MITCHELL	4/6/92
± ---	±.063	± 5°	CHECKED	V. VILLEGAS	4/7/92
			APPPOVED	D. MITCHELL	4/8/92

1. BREAK ALL SHARP EDGES 1/64 MAX.
2. DO NOT SCALE DWG.
3. DIMENSIONING IN ACCORD WITH ANSI Y14.5 STD'^S

125 MAX. ALL MACHINED SURFACES

USED ON

MATERIAL- A36 STEEL

FERMI NATIONAL ACCELERATOR LABORATORY
UNITED STATES DEPARTMENT OF ENERGY

NORTH MIDDLE WEST ARCH BRIDGE
CDF COLLIDER
RD/MECH DEPARTMENT

SCALE	DRWG SIZE	DRAWING NUMBER	REV.
1:4	B	2563.9-MB-297716	A

IDEAS LEVEL 6.0 USERNAME: DMITCHEL

CADFILE:

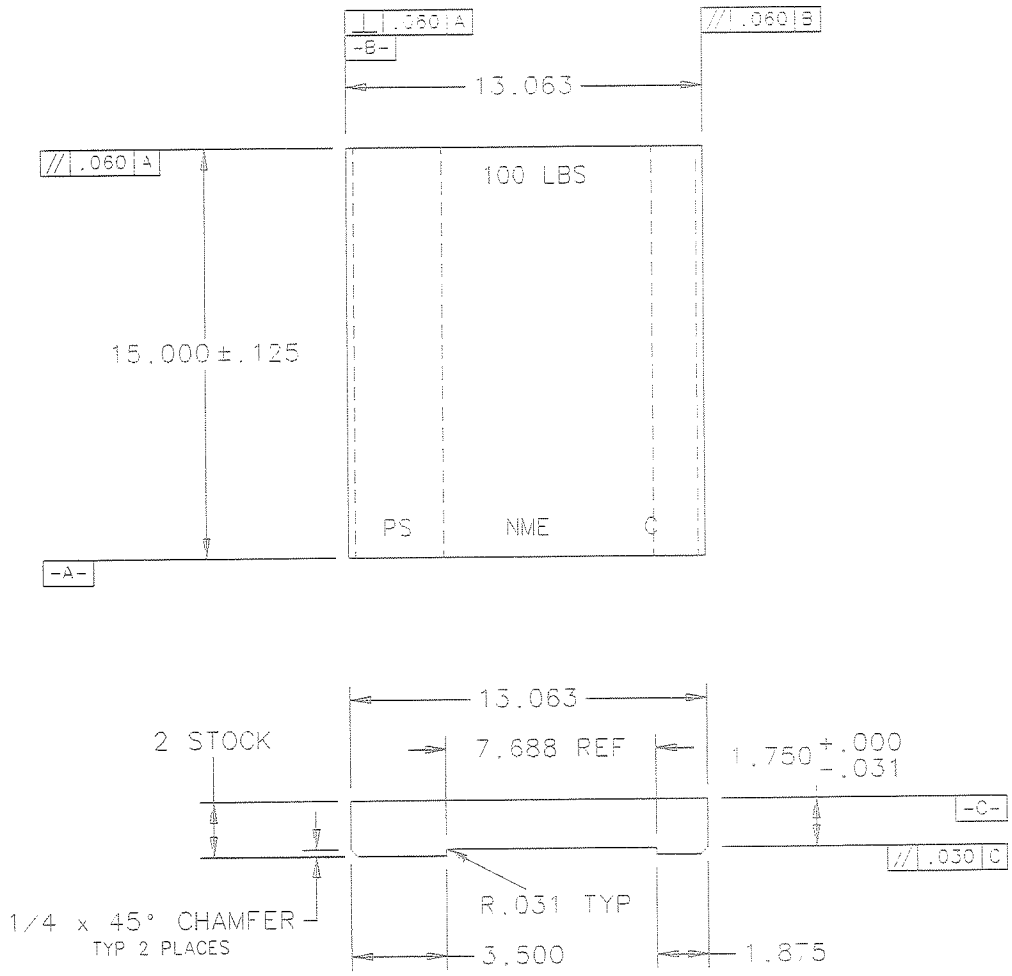

NOTE: Lettering on top view to be stenciled on plate

REV.	DESCRIPTION	DRAWN	DATE
		APPD.	DATE

ITEM NO.	PART NO.	DESCRIPTION OR SIZE	QTY. REQ.
PARTS LIST			

UNLESS OTHERWISE SPECIFIED			ORIGINATOR	J. GRIMSON	MAR 92
FRACTIONS	DECIMAL	ANGLES	DRAWN	D. MITCHELL	4/6/92
± ---	± .063	± 5°	CHECKED		
			APPPOVED		

1. BREAK ALL SHARP EDGES 1/64 MAX.
2. DO NOT SCALE DWG.
3. DIMENSIONING IN ACCORD WITH ANSI Y14.5 STD'S

125 MAX. ALL MACHINED SURFACES

USED ON

MATERIAL- A36 STEEL

FERMI NATIONAL ACCELERATOR LABORATORY
UNITED STATES DEPARTMENT OF ENERGY

NORTH MIDDLE EAST ARCH BRIDGE
CDF COLLIDER
RD/MECH DEPARTMENT

SCALE	DRWG SIZE	DRAWING NUMBER	REV.
1:4	B	2563.9-MB-297715	

IDEAS LEVEL 6.0 | USERNAME: DMITCHEL

CADFILE:

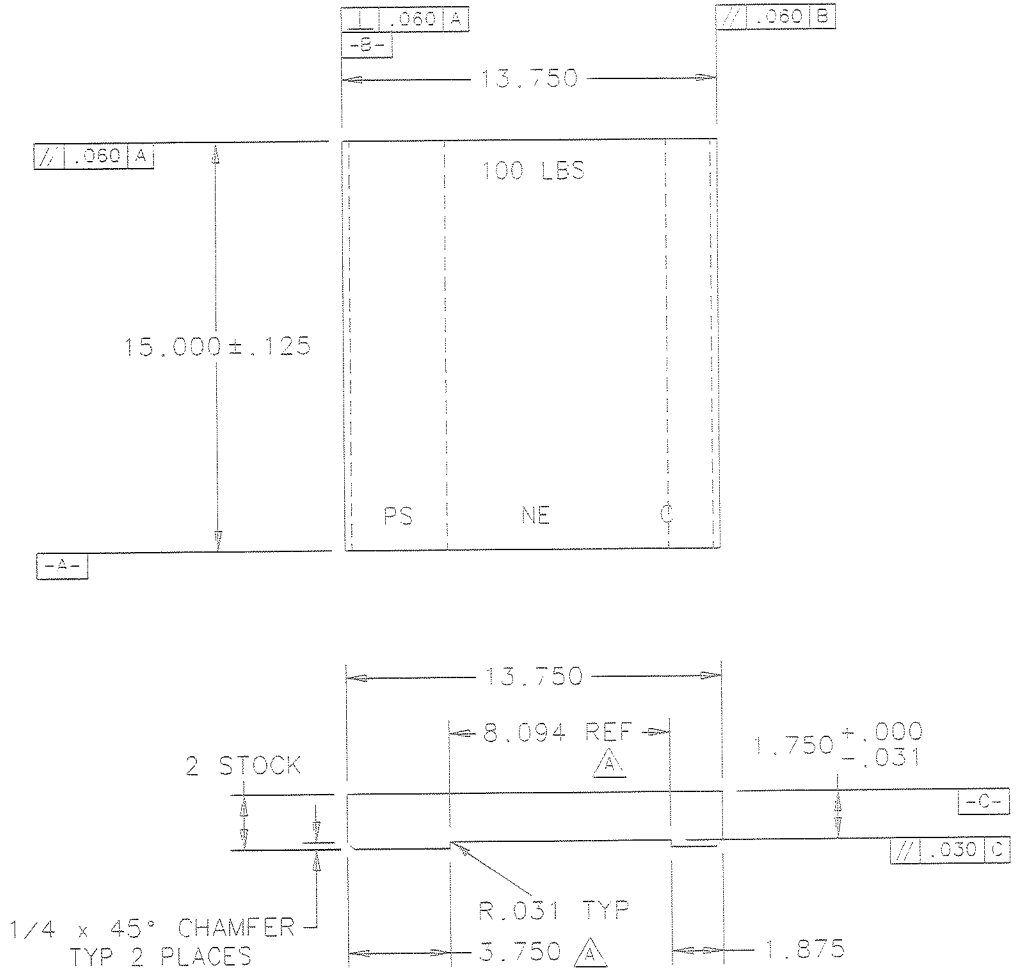

NOTE: Lettering on top view to be stenciled on plate

REV.	DESCRIPTION	DRAWN / APPD.	DATE / DATE
A	Relief narrowed by 3/4"	DMITCHELL	4/8/92

ITEM NO.	PART NO.	DESCRIPTION OR SIZE	QTY. REQ.

PARTS LIST

UNLESS OTHERWISE SPECIFIED			ORIGINATOR	J. GRIMSON	MAR. 92
FRACTIONS	DECIMAL	ANGLES	DRAWN	D. MITCHELL	4/6/92
± ---	± .063	± 5°	CHECKED	V. VILLEGAS	4/7/92
			APPPOVED	D. MITCHELL	4/8/92

1. BREAK ALL SHARP EDGES 1/64 MAX.
2. DO NOT SCALE DWG.
3. DIMENSIONING IN ACCORD WITH ANSI Y14.5 STD'^S

125 MAX. ALL MACHINED SURFACES

USED ON

MATERIAL- A36 STEEL

FERMI NATIONAL ACCELERATOR LABORATORY
UNITED STATES DEPARTMENT OF ENERGY

NORTH EAST ARCH BRIDGE
CDF COLLIDER
RD/MECH DEPARTMENT

SCALE	DRWG SIZE	DRAWING NUMBER	REV.
1:4	B	2563.9-MB-297714	A

IDEAS LEVEL 6.0 USERNAME: DMITCHEL

CADFILE:

REV.	DESCRIPTION	DRAWN	DATE
		APPD.	DATE

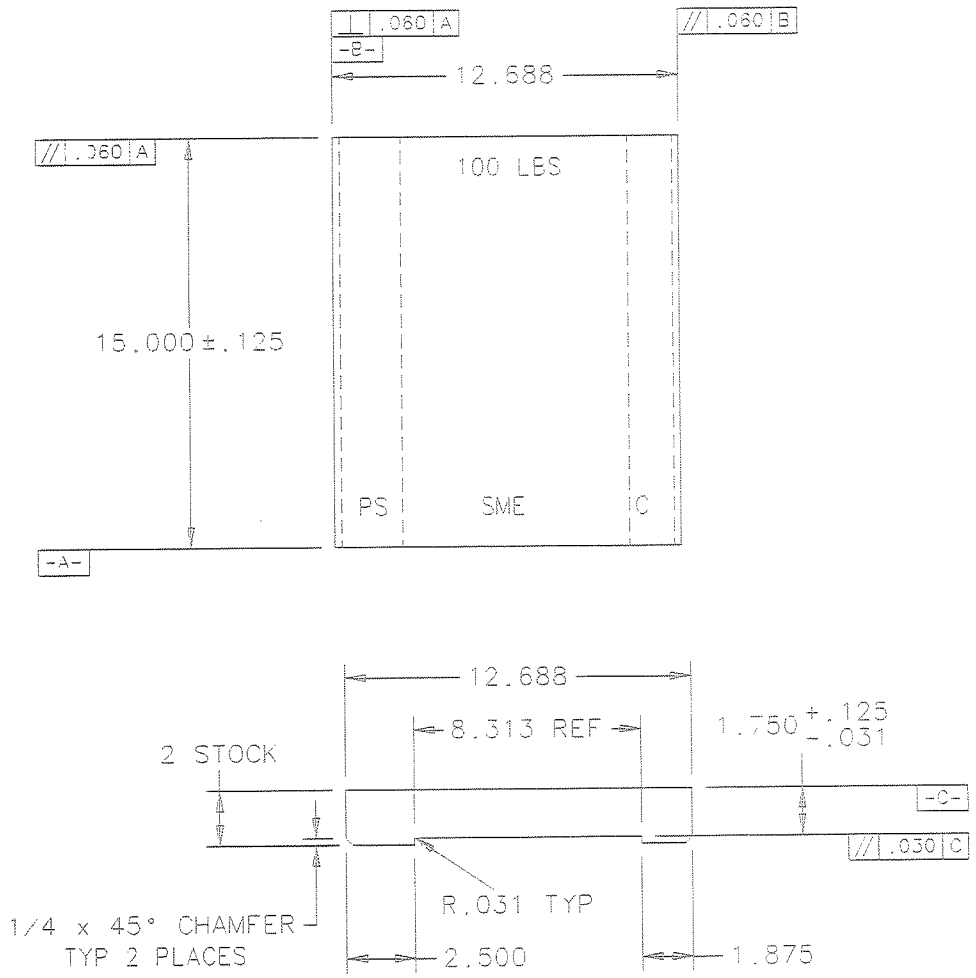

NOTE: Lettering on top view to be stencilled on plate

ITEM NO.	PART NO.	DESCRIPTION OR SIZE	QTY. REQ.

PARTS LIST

UNLESS OTHERWISE SPECIFIED			ORIGINATOR	J. GRIMSON	MAR 92
FRACTIONS	DECIMAL	ANGLES	DRAWN	D. MITCHELL	4/6/92
± ---	± .063	± 5°	CHECKED		
			APPPOVED		

1. BREAK ALL SHARP EDGES 1/64 MAX.
2. DO NOT SCALE DWG.
3. DIMENSIONING IN ACCORD WITH ANSI Y14.5 STD'S

125 MAX. ALL MACHINED SURFACES

USED ON

MATERIAL- A36 STEEL

FERMI NATIONAL ACCELERATOR LABORATORY
UNITED STATES DEPARTMENT OF ENERGY

SOUTH MIDDLE EAST ARCH BRIDGE
CDF COLLIDER
RD/MECH DEPARTMENT

SCALE	DRWG SIZE	DRAWING NUMBER	REV.
1:4	B	2563.9-MB-297712	

IDEAS LEVEL 6.0 USERNAME: DMITCHEL

CADFILE:

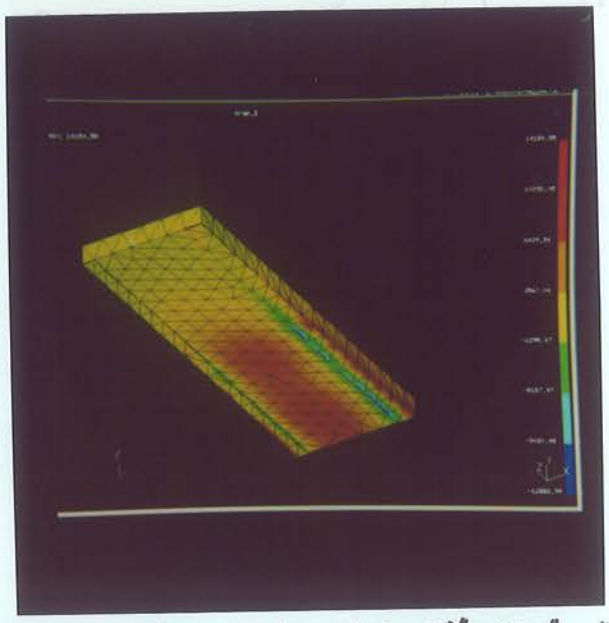

CDF: Moon Wall Bridge steel 38" x 12.75" x 2"

σ_{max} = 14155 psi (Bottom Iso View)

δ_{max} = -.00295" OK

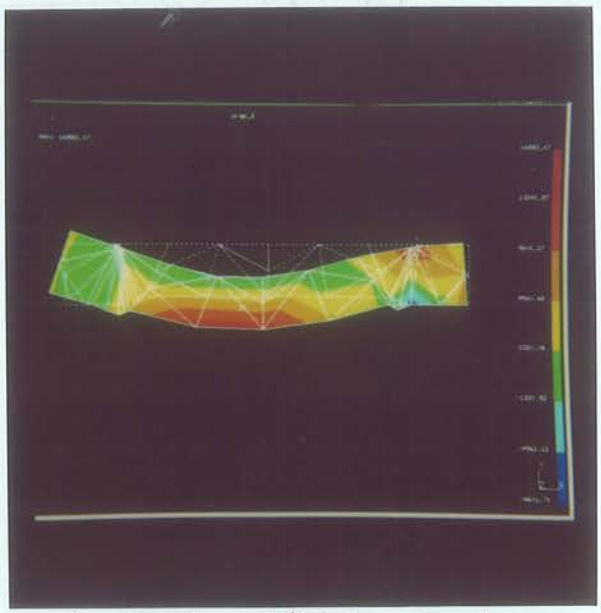

13.125" x 18" Wide x 1¾" Thick 9.625" Span

Section view through center

σ_{max} = 16882 psi δ_{max} = -.0057"

Total load = 155000 lbs

Situation: A 300 ton muon Wall is supported by two (2), 500 ton capacity, Hilman Rollers. With screw jacks, this wall is rolled across a 8 1/2 inch gap between an existing floor and a 4 foot tall steel wall known as the "Pit Steel"

The Hilman Roller consists of two (2) sets of rollers and has dimensions of 20" wide X 10" high X 32" long. Each Hilman Roller must support 150 tons; 75 tons per each set of rollers.

The 8 1/2" gap will be filled with a 2" thick, 38" long steel plate. The plate is supported by a steel ledge 2 inches wide on both sides.

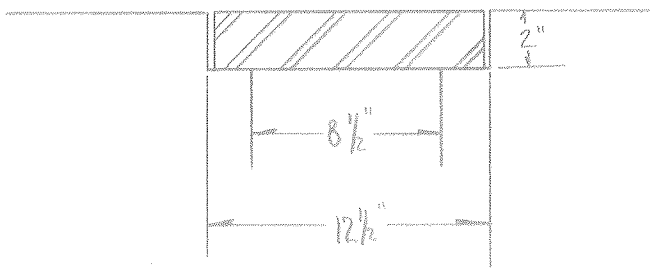

Determination of Plate Load:

The 75 tons per each set of rollers will exert a pressure on two (2), rectangular surface areas. The rollers are 5" wide and have contact with the surface over a 25" span. The surface pressure is calculated as follows:

75 tons over each 25" X 5" area

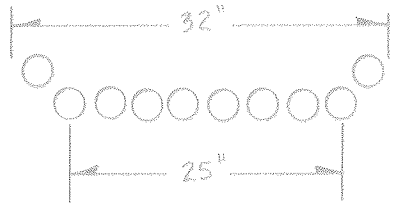

Hilman Roller Pattern (Side view)

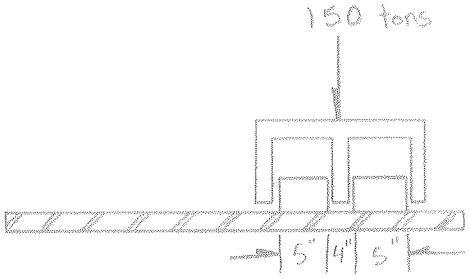

Hilman Roller on Steel Plate (Front view)

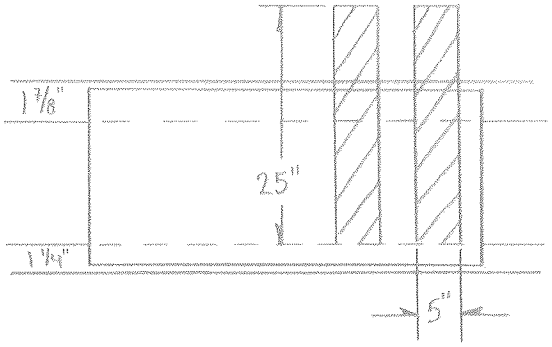

Worst Loading Case

Hilman does not span the entire gap. Surface pressure on floor and on the steel plate. 75 ton load on each cross-hatched area.

(Top View)

$$\text{Pressure} = \frac{\text{Force}}{\text{Area}} = \frac{(75\text{ tons})(2000\text{ lb/ton})}{(25'')(5'')} = 1200\text{ psi}$$

This face pressure of 1200 psi will not be applied across the entire plate because, if the Hilman Roller spans the entire plate, the existing floor and pit steel will take most of the entire load. This condition would not yield the highest stress situation.

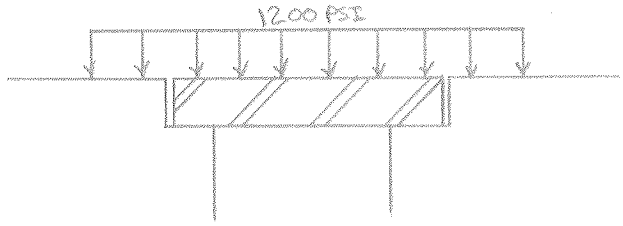

In reality, as the center of the steel deflects, the load will be transferred to the two supports.

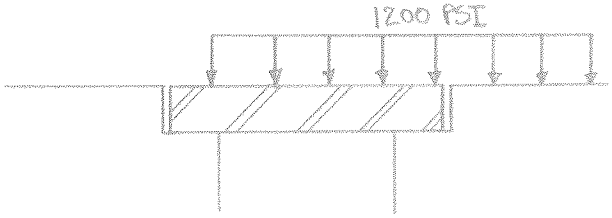

This loading scheme is more realistic for the worst case.

Computer Stress Analysis:

The following layout shows the loading and restraints used to model the steel plate in SDRC IDEAS: FEM.

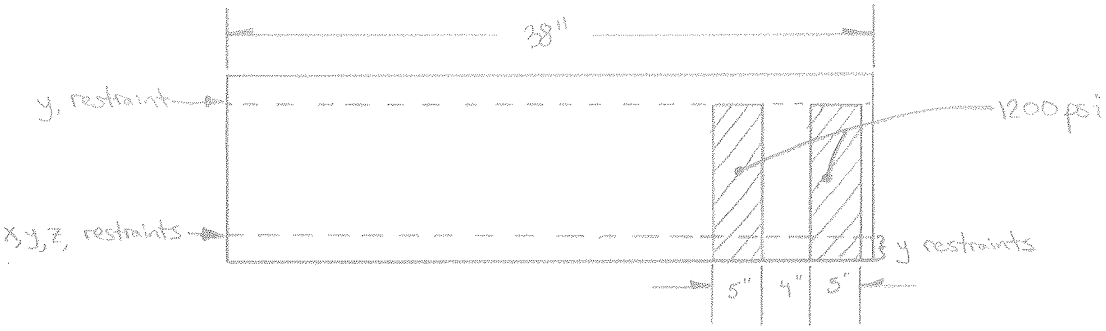

Computer Results: (combined stress)

$\sigma_{max} = 14{,}154$ psi OK

$\delta_{max} = -.00295''$

F_b = allowable stress $= .6F_y = 21{,}600$ psi