DRIVE LAYOUT:

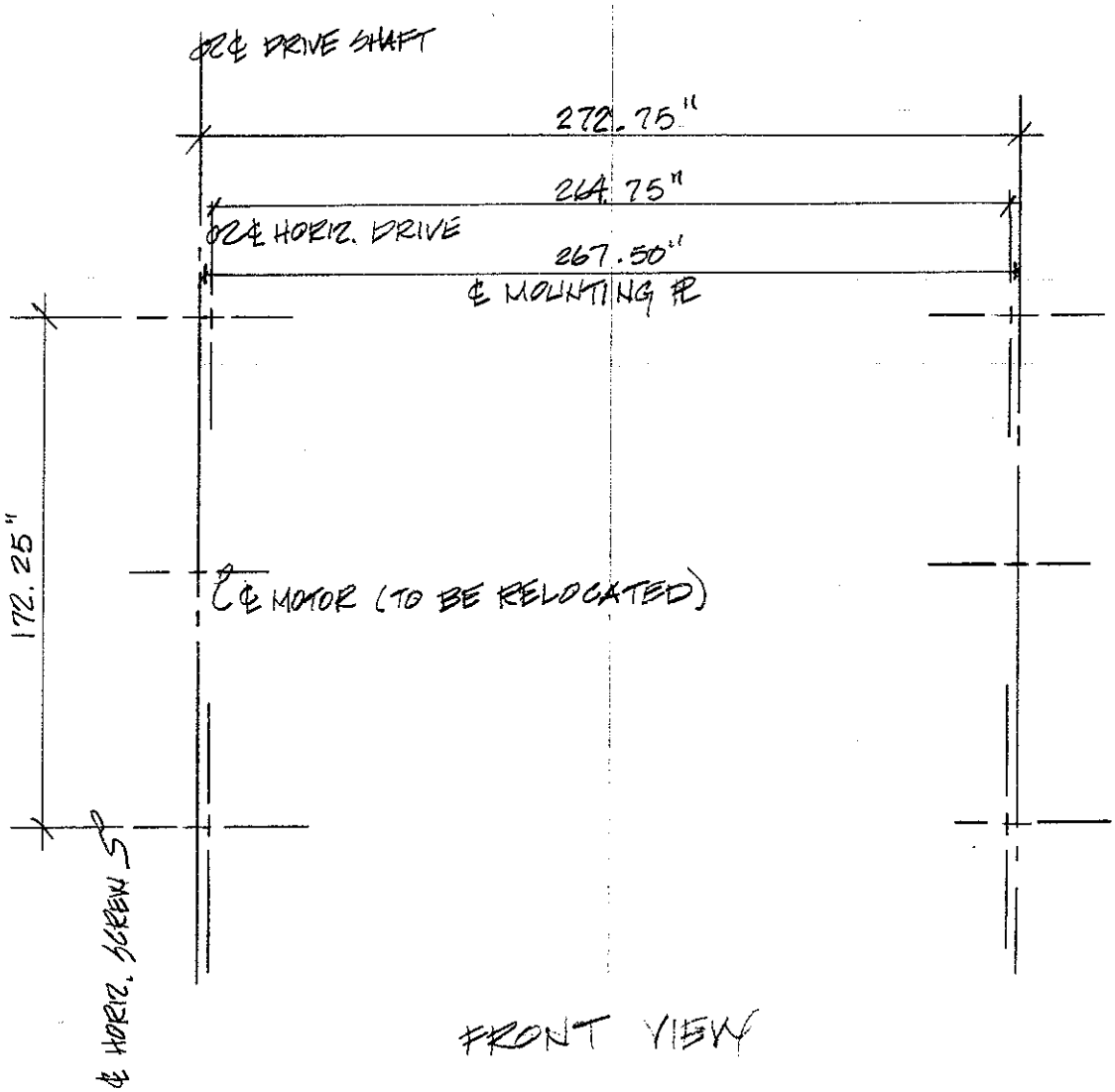

FRONT VIEW

BEAM DESIGN:

1) HORIZONTAL LOAD

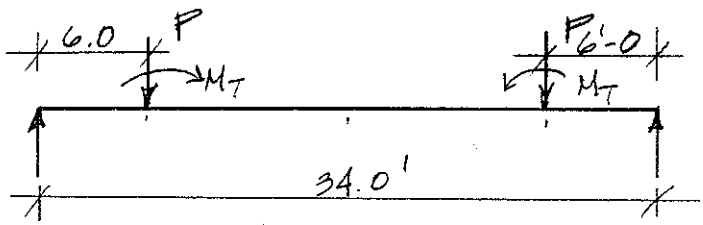

$P = 15^K + 15(.20)$ AISC SPEC. 1.3.3 (20% IMPACT)
$= 18^K$

$M_T = 1823$ IN-LBS $= 0.15$ K-FT $R = 18.0^K$

$M = Pa + M_T = 18(6.0) + 0.15$
$= 108.15$ K-FT

2) VERTICAL LOAD

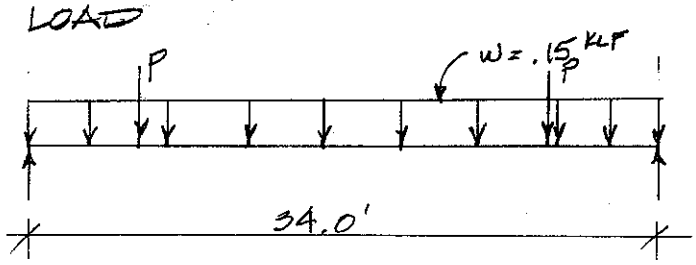

P = MOTOR + ACUTATOR + BEAM
= .100 + 0.080 + .050(14)
= 0.880 SAY 1.0 K

$R = 1.0 + \frac{.15(34)}{2}$
$= 3.55^K$

$M = wl^2/8 + Pa = .15(34)^2/8 + 1.0(6)$
$= 27.68$ K FT

REVISED R DUE TO INCREASED BM. WT:
$R = 1.0 + \frac{.177(34)}{2} = 4.0^K$

TRY W 12 × 106

$l/r_T = 34(12)/3.36 = 121.4 > 119$

$\therefore F_{b_x} = \frac{170 \times 10^3 C_b}{(l/r_T)^2} = \frac{170 \times 10^3 \times 1.0}{(121.4)^2}$
$= 11.53$ KSI

$S = M/F_{b_x} = (12)108.5/11.53$
$= 112.5 \text{ IN}^3 < 145 \text{ IN}^3$ ok

$F_{by} = 0.75(36) = 27.0$ KSI

$f_{by} = 12(27.68)/49.3$
$= 6.74$

$f_{bx}/F_{bx} + f_{by}/F_{by} = \frac{8.95}{11.53} + \frac{6.74}{27.0} = 1.026 \approx 1.0$ ok

DEFLECTION
A) VERT:

$\Delta = \frac{5(0.15)(34.0)^4(1728)}{(384)(29{,}000)(301)} + \frac{1.0(6.0)(1728)}{24(29{,}000)(301)}(3(34)^2 - 4(6.0)^2)$
$= 0.68'' < 1''$ OK

B) HORIZ

$\Delta = \frac{18(6.0)(1728)}{24(29{,}000)(933)}(3(34)^2 - 4(6.0)^2)$
$= 0.96'' < 1''$ ok

TRY STEEL TUBE:

$F_b = 0.60 F_y$
$= 0.60(46)$
$= 27.6$ KSI

AISC 1.5.1.4.4
LATERAL BRACING @ $\left(1950 + 1200 \frac{M_1}{M_2}\right)\frac{b}{F_y}$
$= (1950 + 1200(0))(12/46)$
$= 509''$
$= 42.4' > 34'$ ok

HORIZ. LOAD:

$S = M/F_b = 12(108.15)/27.6$
$= 47.0 \text{ IN}^3$

VERT. LOAD:

$S = 12(27.68)/27.6 = 12.0 \text{ IN}^3$

TRY TS 12 x 12 x 0.500

$S_x = S_y = 80.9 \text{ IN}^3 > 47.0 \text{ IN}^3$ ok

CHECK DEFLECTION:

$$\Delta = \frac{18(6.0)(1728)}{24(29{,}000)(485)}\left(3(34)^2 - 4(6.0)^2\right)$$

$= 1.84''$ N.G.

FIND REQ'D I FOR ½" DEFLECTION

$$\Delta = \frac{Pa}{24EI}\left(3l^2 - 4a^2\right)$$

$$0.5 = \frac{18(6)(1728)}{24(29{,}000)(I)}\left(3(34)^2 - 4(6.0)^2\right)$$

$1783 = I$

TRY 11" x 16" W/ 2.25" PLATES & 1" SIDE PLATES

	A	y	Ay	Ay^2	I_o	Ay^2+I_o
1	36	1.125	40.5	45.5625	15.18	60.74
2	36	9.875	355.5	3510.5625	15.18	3525.74
3	6.5	5.5	35.75	196.625	22.89	219.52
4	6.5	5.5	35.75	196.625	22.89	219.52
	85		467.5			4025.52
						− 2571.25

$\bar{y} = \frac{467.5}{85} = 5.5$

$A\bar{y}^2 = 2571.25$

$I = 1454.26 \text{ IN}^4$

TRY 11" x 16" W/ 2.50 PLATES & 1" SIDE PLATES

	A	y	Ay	Ay^2	I_o	Ay^2+I_o
1	40	1.25	50	62.5	20.83	83.33
2	40	9.75	390	3802.5	20.83	3823.33
3	6	5.5	33	181.5	18.0	199.50
4	6	5.5	33	181.5	18.0	199.50
	92		506			4305.66
						− 2783.0
						1522.66 IN^4

$\bar{y} = \frac{506}{92} = 5.5''$

$A\bar{y}^2 = 92(5.5)^2 = 2783 \text{ IN}^4$

TRY 11" x 16" W/ 2.50 PLATES & 2" SIDE PLATES

	A	y	Ay	Ay^2	I_o	Ay^2+I_o
1	40	1.25	50	62.5	20.83	83.33
2	40	9.75	390	3802.5	20.83	3823.33
3	12	5.5	66	363.0	36.0	399.0
4	12	5.5	66	363.0	36.0	399.0
	104		572			4704.66
						− 3146.0
						1558.66 IN^4

$\bar{y} = 572/104 = 5.5$

$A\bar{y}^2 = 104(5.5)^2 = 3146$

TRY 17 × 17 W/ 1.5" PLATES AND 1" SIDE PLATES

	A	y	Ay	Ay^2	I_o	$Ay^2 + I_o$
1	25.5	.75	19.125	14.34	4.78	19.12
2	25.5	16.25	414.375	6733.59	4.78	6738.37
3	14.0	8.5	119.0	1011.50	228.67	1240.17
4	14.0	8.5	119.0	1011.50	228.67	1240.17
	79.0		671.5			9237.83
						− 5707.75
					I =	3530.08 in⁴

$\bar{y} = 671.5/79.0 = 8.5$

$A\bar{y}^2 = 79(8.5)^2 = 5707.75$

TRY 15" × 10½" W/ 1" PLATES AND 1" SIDE PLATES

	A	y	Ay	Ay^2	I_o	$Ay^2 + I_o$
1	10.5	0.5	5.25	2.625	.875	3.50
2	10.5	14.5	152.25	2207.625	.875	2208.50
3	13.0	7.5	97.5	731.25	183.08	914.33
4	13.0	7.5	97.5	731.25	183.08	914.33
	47.0		352.5			4040.66
						− 2643.75
						1396.91

$\bar{y} = 352.5/47 = 7.5$

$A\bar{y}^2 = 47(7.5)^2$ 2643.75

TRY 16" × 12" W/ 1" PLATES AND 1" SIDE PLATES

	A	y	Ay	Ay^2	I_o	$Ay^2 + I_o$
1	12	.5	6.0	3.0	1.0	4.0
2	12	15.5	186.0	2883.0	1.0	2884.0
3	14	8.0	112.0	896.0	228.67	1124.67
4	14	8.0	112.0	896.0	228.67	1124.67
	52		416			5137.34
						3328.0
					I =	1809.34 in⁴

$\bar{y} = 416/52 = 8.0$

$A\bar{y}^2 = 52(8.0)^2 = 3328.0$

	A	y	Ay	Ay^2	I_o	$Ay^2 + I_o$
1	14	.5	7.0	3.5	1.167	4.667
2	14	11.5	161.0	1851.5	1.167	1852.667
3	12	6.0	72.0	432.0	144.0	576.0
4	12	6.0	72.0	432.0	144.0	576.0
	52		312			3009.334
						− 1872
						1137.334 in⁴

$\bar{y} = 312/52 = 6.0$

$A\bar{y}^2 = 52(6.0)^2 = 1872$

CONNECTION - BEAM TO WALL

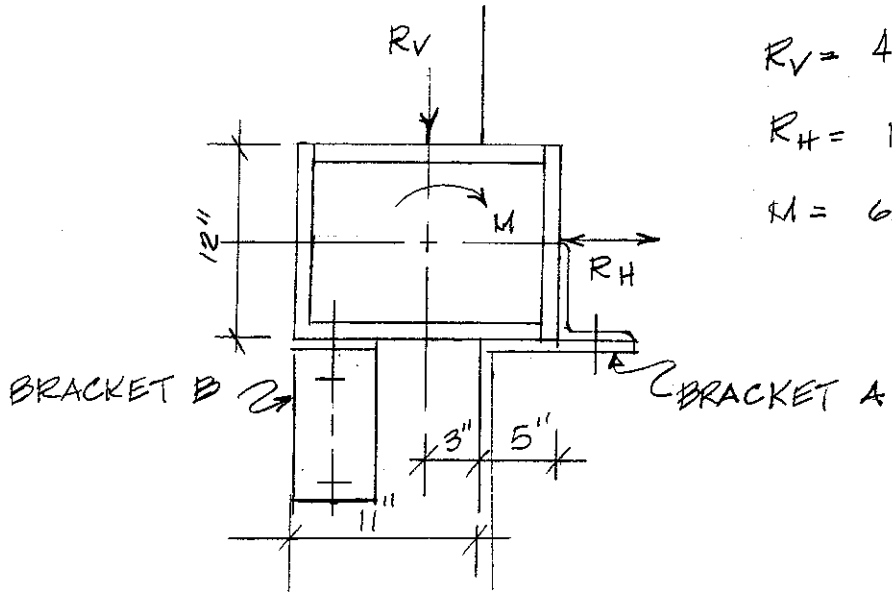

$R_V = 4.0^K$

$R_H = 18.0^K$

$M = 6.6^{K-IN}$

HORIZ REACTION CARRIED BY BRACKET "A"

$P = 18^K$ FOR $\frac{3}{4}$"ϕ A-325 BOLTS:

$\#$ BOLTS REQ'D $= 18/9.3 = 1.9$ SAY 2 BOLTS MIN. FOR SHEAR

VERT. REACTION CARRIED BY BRACKET "A" & "B"

$R_T = \frac{R_V}{2} \pm M/\text{BEAM WIDTH}$

$= 2.0 \pm 6.6/16 = 2.41^K$ OR 1.59^K

REACTION FROM HORIZONTAL LOAD DUE TO OFFSET OF SUPPORT:

$R_{VV} = 18.0 \times 6.0''/16''$
$= 6.75^K$

SINCE TORSIONAL MOMENT WILL NOT BE ACTING WHEN HORIZONTAL LOAD IS APPLIED TO BEAM (END OF SCREW WILL BE SUPPORTED BY WALL) DESIGN BRACKET "B" FOR 6.75K

OF HILTI KWIK-BOLTS REQ'D:
USING 3/4" ø ANCHORS & 4000 PSI CONC.

ALLOW. TENSION = 2540 #/BOLT
ALLOW. SHEAR = 4280 #/BOLT

6.75/4.28 = 1.58 ∴ 2 BOLTS REQ'D

MIN. EMBEDMENT = 3 1/4"

MIN SPA. = 6 1/2"

MIN EDGE DIST. = 8 1/8"

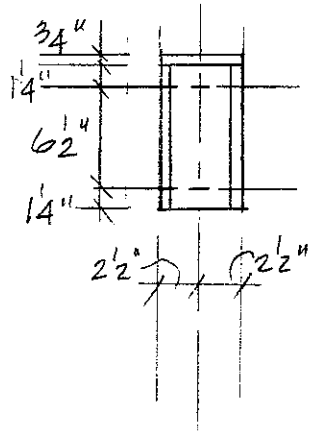

BRACKET "A" DESIGN

TENSION = 18^K
SHEAR = 6.75^K

USE 5" EMBEDMENT

ALLOW TENSION = 4120 #
ALLOW SHEAR = 4280 #

TRY 6 BOLTS.

$F_T = 18/6 = 3.0$
$F_S = 6.75/6 = 1.125$

$3.0/4.12 + 1.125/4.280 = 0.99 < 1.0$ ok

USE 6 BOLTS

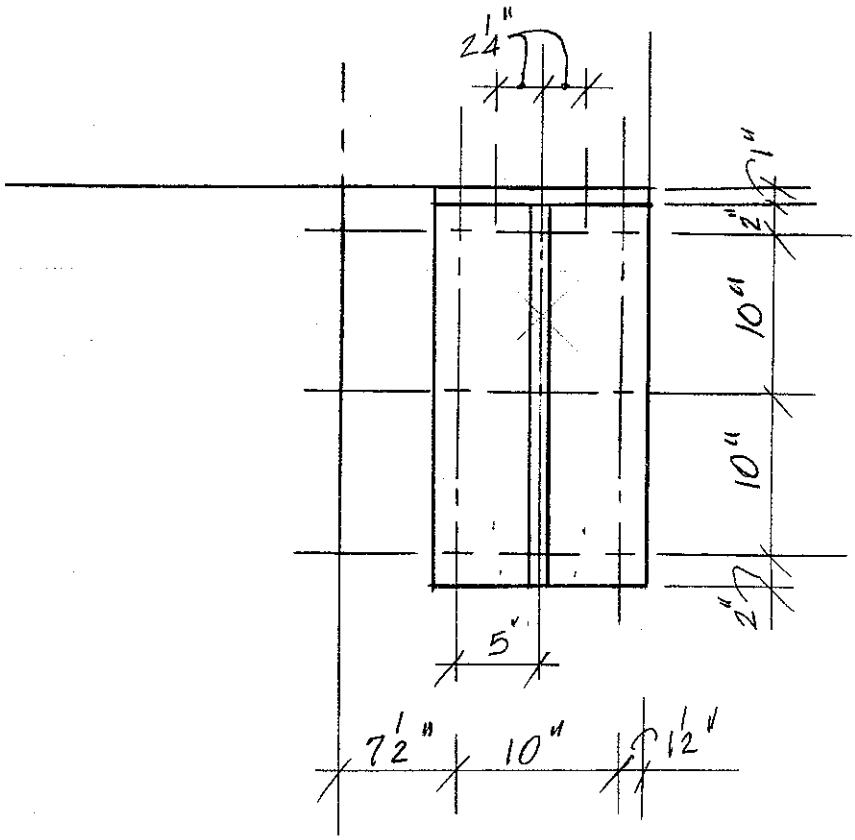
2 1/4"
1"
2"
10"
10"
2"
5"
7 1/2"
10"
1 1/2"

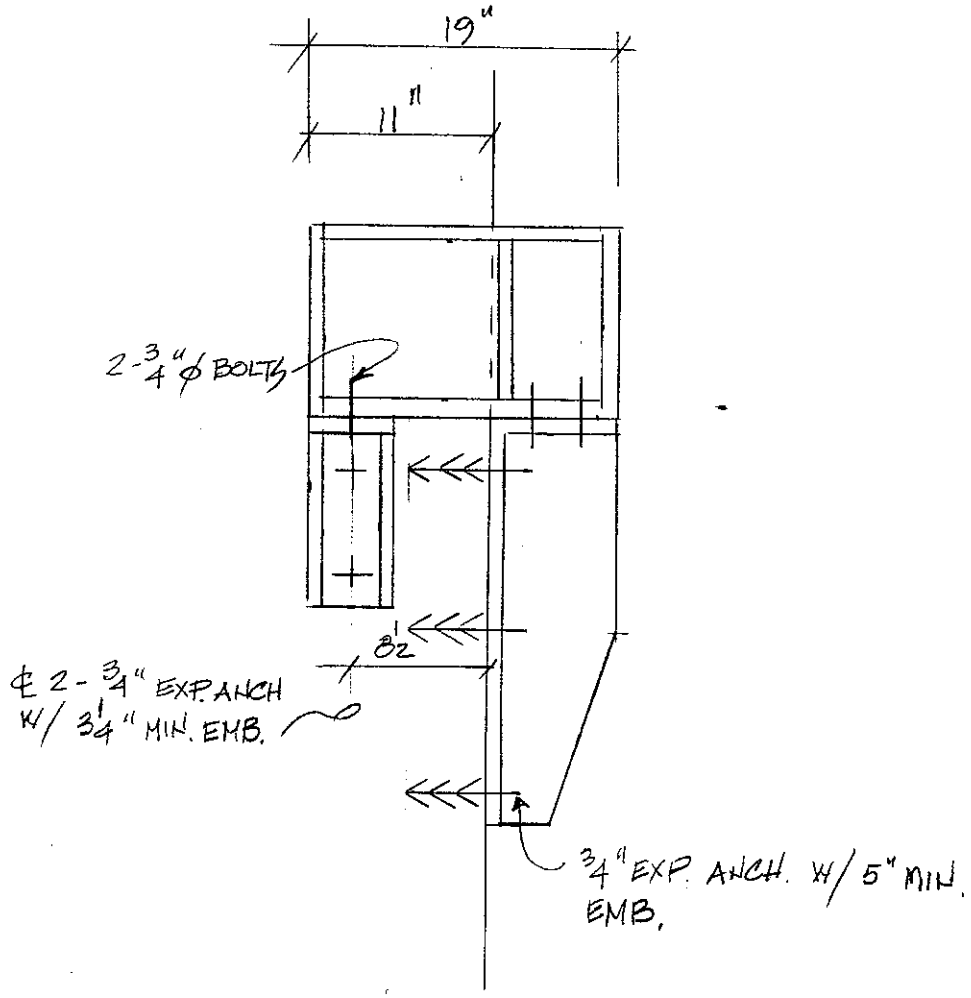
19"
11"
2-3/4" ϕ BOLTS
8 1/2"
℄ 2-3/4" EXP. ANCH
W/ 3 1/4" MIN. EMB.
3/4" EXP. ANCH. W/ 5" MIN.
EMB.

BOX BEAM CONNECTIONS:

$F_V = \frac{F_y}{2.89} C_V \leq 0.40 F_y$ 1.10-1 p.5-32

$= \frac{36}{2.89}(4.3) \qquad 0.4(36)$

$= 53.7 \quad > \quad 14.4^{KSI}$

USE 14.4^{KSI}

$h/t = 17/1.0 = 17$

$a/h = 34(12)/17 = 24$

$K = 5.34 + \frac{4.00}{(a/h)^2}$

$= 5.34 + 4.00/(24)^2 = 5.347$

$C_V = 190/17 \sqrt{\frac{5.347}{36}} = 4.3$

MAX LOAD FOR 3" OF 5/16" GROOVE WELD @ 6"

$F_V = 0.30(70) = 21.0^{KSI}$

FOR 1/16": $1/16(21.0) = 1.31$ K/IN OF WELD

FOR 5/16: $5(1.31) = 6.56$ K/IN OF WELD

$Q = A_f\left(\frac{h}{2} + \frac{t_f}{2}\right) = 12\left(17/2 + 1.0/2\right)$
$= 108$

$VQ/I = 18(108)/1523$
$= 1.28$ KIPS/IN

FOR 12":
$12(1.28) = 15.32$ KIPS/FT

3" @ 6" $= 2(3(6.56))$

$= 39.4^{K}/FT > 15.32^{K}/FT$ ok

FIND HORIZONTAL C.G. OF NEW BEAM

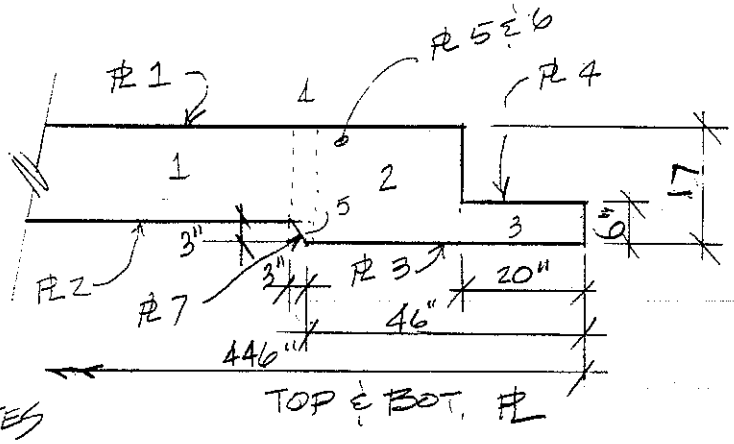

C.G. TOP & BOT. PLATES

PART	AREA	y	Ay
1	4872	10	48720
2	884	8.5	7514
3	240	3	720
4	84	10	840
5	9	2	18
	6089		57812

$\bar{y} = 57812/6089$

$= 9.5''$

C.G ASSEMBLY

PART	AREA	y	Ay
PL 1	4872	18.5	90132
PL 2	4176	3.5	14616
PL 3	1104	0.5	552
PL 4	480	7.5	3600
PL 5	6089	10.5	63934.5
PL 6	6089	10.5	63934.5
PL 7	102	1.5	153
	22912		236922

$\bar{y} = 236922/22912$

$= 10.34''$

REVISED BEAM DIAGRAMS:

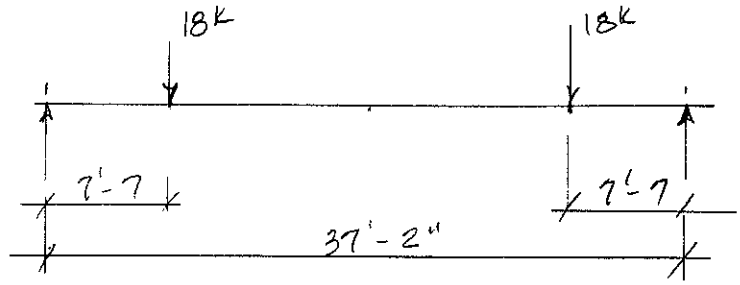

V

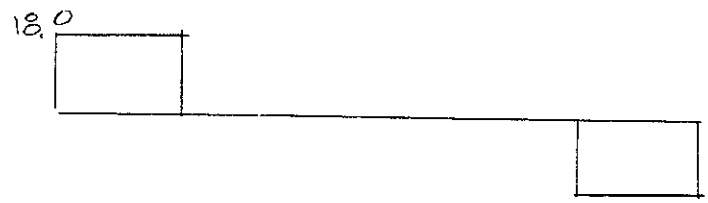

M

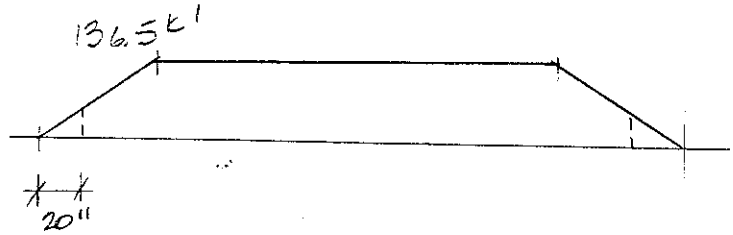

M @ NARROW BEAM SECTION = $18(20)/12 = 30^{K'}$

$S_{MIN} = 30(12)/27$
$= 13.33 \text{ IN}^3$

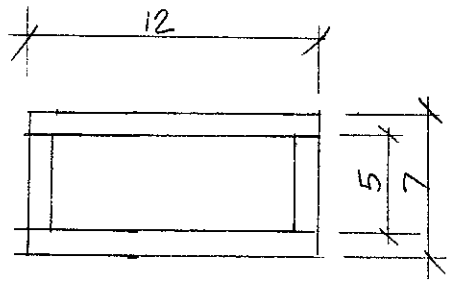

	AREA	y	Ay	Ay^2	I_o	$Ay^2 + I_o$
1	12	6.5	78	507	1.0	508
2	12	0.5	6	3	1.0	4
3	5	3.5	17.5	61.25	125	186.25
4	5	3.5	17.5	61.25	125	186.25
	34		119			884.5
						− 416.5
					I_{yy} =	468

$\bar{y} = 119/34 = 3.5$

$A\bar{y}^2 = 34(3.5)^2 = 416.5$

$S_{yy} = 468/3.5 = 133.7$
> 13.3 ok

ACTUAL $f_b = 30(12)/133.7$
$= 2.69$ KSI <u>OK</u>

CDF COLLIDER DETECTOR

Kwik Bolt Stud Anchor System continued

HKB - Kwik-Bolt Allowable Working Loads (lbs)

Anchor Size	Embed.	2000 psi Tension	2000 psi Shear	4000 psi Tension	4000 psi Shear	6000 psi Tension	6000 psi Shear
1/4	1 1/8	240	410	360	650	440	600
	1 3/4	570	410	670	650	820	600
	2 1/2	700	410	840	650	840	600
3/8	1 5/8	560	940	590	1280	700	1570
	2 1/2	770	940	970	1280	1110	1570
	4 1/2	890	950	1200	1350	1350	1570
1/2	2 1/4	1140	1860	1380	2080	1710	2340
	3 1/2	1750	1860	2360	2080	3300	2340
	6	2250	2220	3070	2560	3820	2880
5/8	2 3/4	1350	2800	1650	2890	1920	3370
	4 1/2	1750	2800	3000	2890	3620	3370
	7 1/2	2250	3340	4250	3860	5250	3860
3/4	3 1/4	2040	3310	2540	4280	2710	4530
	5	2920	3310	4120	4280	4400	4530
	9	4000	3800	5870	4620	5900	5250
1	4 1/2	3500	6840	4000	6720	5120	8030
	7	4550	6840	5860	6720	5860	8030
	10	4550	6840	5860	8620	5860	9100
1 1/4	5 1/2	4750	9190	5750	8920	7800	11300
	8 1/2	6270	9960	8650	8920	11100	11770
	10 1/2	6700	9960	10220	8920	11100	12400

Combined loading — combined loading should be calculated on straight line reaction diagram of pure shear (F_S) and pure tension (F_T), based on the interaction equation below.

$$\frac{F_S \text{ applied}}{F_S \text{ allowable}} + \frac{F_T \text{ applied}}{F_T \text{ allowable}} \leq 1$$

Super Kwik Bolt Average Allowable Tension & Shear Loads (lbs)

Concrete Strength		2000 PSI		4000 PSI		6000 PSI	
Diameter	Embedment	Tension	Shear	Tension	Shear	Tension	Shear
3/8"	2 5/8"	—	—	898	1027	1281	1331
	5"	—	—	1558	1027	1896	1331
1/2"	3 1/4"	1755	2467	2497	2860	3496	2648
	4 1/4"	2211	2467	3696	2860	3750	2648
	6 1/4"	2710	2467	3787	2860	3750	2648
5/8"	4"	—	—	2758	2936	3805	3254
	7 1/2"	—	—	4256	2936	5631	3254
3/4"	4 3/4"	—	—	3337	4654	4822	5115
	9 1/2"	—	—	5492	4654	7313	5115
1"	6 1/2"	5737	4853	8742	6884	9384	8191
	8 1/2"	7208	4853	12453	6884	13329	8191
	10 1/2"	8706	4853	12440	6884	14401	8191
1 1/4"	8 1/8"	7243	9390	10675	10370	11067	9934
	10 5/8"	7743	9390	13420	10370	14989	9934
	13 1/8"	9313	9390	16231	10370	17276	9934

Actual Concrete Strength - 2000 PSI: 1470 PSI - 2042 PSI
4000 PSI: 3420 PSI - 4135 PSI
6000 PSI: 6002 PSI - 6175 PSI

Stainless Steel Kwik-Bolt - Allowable Working Loads (lbs)

Anchor Size	Embed. Depth	3000 PSI Concrete Tension	3000 PSI Concrete Shear
1/4"	1 1/8	320	550
3/8"	1 5/8	470	1010
1/2"	2 1/4	970	2290
5/8"	2 3/4	1400	3140
3/4"	3 1/4	2010	4250
1"	4 1/2	4060	6970
1 1/4"	5 1/2	7810*	9960*

*Concrete strength used for 1 1/4 Dia. = 7400 psi

Kwik Bolt Material Specifications

Kwik Bolt (Carbon Steel) — Stud bolt material is AISI 11L41 for diameters 1/4" - 1/2" and AISI 1144 for diameters 5/8" - 1 1/4". This material meets the chemical requirements for ASTM specification A 108.

Kwik Bolt (Stainless Steel) — Stud bolt material is AISI 304 stainless steel.

Kwik Bolt Wedges — The two independent expansion wedges for the carbon steel bolts are manufactured from AISI 1050 spring steel. The expansion wedges on the stainless steel bolts are manufactured from stainless steel.

Kwik Bolt Nuts — The Kwik Bolt nuts for both the carbon steel and stainless steel bolts meet the dimensional requirements of ANSI B 18.2.2. The carbon steel nuts also conform to the chemical requirements of ASTM A 563. The stainless steel nuts conform to ASTM F 594.

Kwik Bolt Washers — The washers for the carbon steel Kwik Bolts are manufactured from SAE 1005/1020 and zinc plated in accordance with ASTM B633, Fe/Zn5, Type III. The stainless steel washers are manufactured from AISI 304 stainless steel. Both type washers meet ANSI 18.22.1 (1965) type A plain.

Approvals

1. Conforms to the description in Federal Specification FF-S-325, Group II, Type 4, Class 1 for concrete expansion anchors.
2. UL listed, Control No. 506P, "Pipe Hangers" (3/8" - 3/4" diameters).
3. International Conference of Building Officials (ICBO): Research Report No. 2156.
4. Southern Building Code Congress (SBCC): see Report No. 8477.
5. City of Los Angeles: Report No. 23272.
6. Dade County Florida: Report No. 83-1014.3
7. West Palm Beach Florida: Report No. 82-10

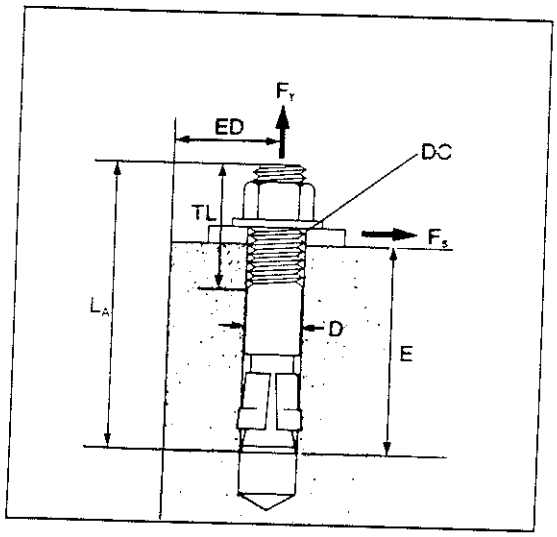

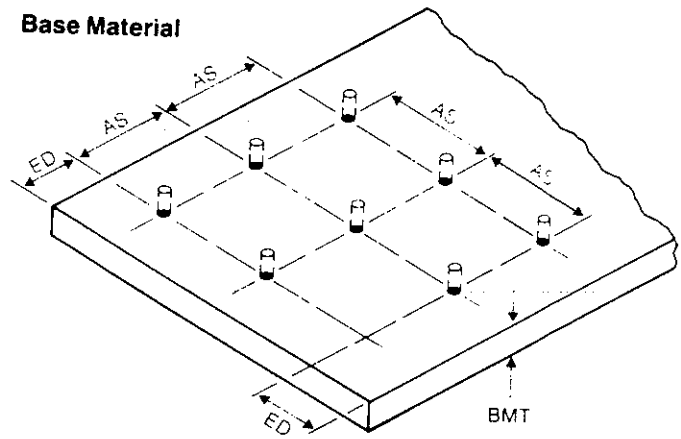

- Plated in accordance with requirements of ASTM Specification B 633, Sc. 1, Type III, for electroplated zinc.

Specification Table

Setting Details			Anchor Size						
			HKB 1/4"	HKB 3/8"	HKB 1/2"	HKB 5/8"	HKB 3/4"	HKB 1"	HKB 1 1/4"
BD = D	drill bit size = anchor diameter		1/4"	3/8"	1/2"	5/8"	3/4"	1"	1 1/4"
E	min. depth of embedment		1 1/8"	1 5/8"	2 1/4"	2 3/4"	3 1/4"	4 1/2"	5 1/2"
DC	wedge clearance hole		.315"	.455"	.605"	.745"	.880"	1.170"	1.455"
L_A	anchor length min./max.		1 3/4" * / 4 1/2"	2 1/8" / 7"	2 3/4" / 7"	3 1/2" / 10"	4 1/4" / 12"	6" / 12"	9" / 12"
TL	thread length std./extra thread length		3/4" / 3"	7/8" / 4"	1 1/4" / 4"	1 1/2" / 4 1/2"	1 1/2" / 4 1/2"	2 1/4" / 4 1/2"	3 1/4" / 4 1/2"
M	Installation torque (ft. lb)	Min.	7	20	40	55	125	235	400
		Max.	10	25	50	75	175	350	550
BMT	Min. Base Material Thickness (inches)		3" or 1.3 E whichever number is greater						
DIAMETER (in.)			1/4	3/8	1/2	5/8	3/4	1	1 1/4
EMBEDMENT (in.)			1 1/8 / 1 3/4	1 5/8 / 2 1/2	2 1/4 / 3 1/2	2 3/4 / 3 1/2	3 1/4 / 5	4 1/2 / 6	5 1/2 / 8 1/2
AS	Spacing Required To Obtain Maximum Working Load		2 1/4 / 3 1/2	3 1/4 / 5	4 1/2 / 7	5 1/2 / 7	6 1/2 / 10	9 / 12	11 / 17
AS min	Minimum Allowable Spacing Between Anchors (in.) Refer to Note #1.		1 1/8 / 1 3/4	1 5/8 / 2 1/2	2 1/4 / 3 1/2	2 3/4 / 3 1/2	3 1/4 / 5	4 1/2 / 6	5 1/2 / 8 1/2
ED	Edge Distance Required To Obtain Maximum Working Load (in.)	Shear	2 7/8 / 4 3/8	4 1/8 / 6 1/4	5 5/8 / 8 3/4	6 7/8 / 8 3/4	8 1/8 / 12 1/2	11 1/4 / 15	14 / 21
		Tension	1 3/4 / 2 5/8	2 1/2 / 3 3/4	3 3/8 / 5 1/4	4 1/8 / 5 1/4	4 7/8 / 7 1/2	6 3/4 / 9	8 1/2 / 12 3/4
ED min	Minimum Allowable Edge Distance (in.) Refer to Note #2 & 3		1 1/8 / 1 3/4	1 5/8 / 2 1/2	2 1/4 / 3 1/2	2 3/4 / 3 1/2	3 1/4 / 5	4 1/2 / 6	5 1/2 / 8 1/2

NOTE:
1. When using AS min reduce the working load by 30%.
2. When using ED min and the load is a shear load, reduce the working load by 50%.
3. When using ED min and the load is a tensile load, reduce the working load by 20%.
4. For AS and ED of anchors with actual embedments between the listed embedments, use linear interpolation.
5. For AS and ED of anchors with embedments greater than the deepest embedment listed, use value for deepest embedment listed.

Anchor Spacing and Edge Distance Guidelines

The Kwik bolt Anchor Spacings and Edge Distances were calculated using the following information:

	Anchor Spacing			Edge Distance Shear Load Only			Edge Distance Tensile Load Only		
	AS	AS min	FAS	ED	ED min	Fed	ED	ED min	Fed
Kwik Bolt	2.0E	1.0E	0.70	2.5E	1.0E	0.50	1.5E	1.0E	0.80

CDF COLLIDER DETECTOR

Kwik Bolt Stud Anchor System continued

Kwik Bolt Sizes (For Specification Tables see page 15)

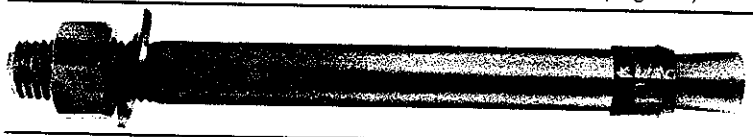

Standard Kwik Bolt Sizes

Catalog No.	Description	Length ID Code	Size (Dia.) (Length)	Min. Embed.	Thread Length	Maximum Thickness Fastened	Threads Per Inch	Qty. P Box/C
5500002	KB 14-134	A	1/4" x 1 3/4"	1 1/8"	3/4"	5/16"	20	100/90
5500008	KB 14-214	B	1/4" x 2 1/4"			13/16"		100/90
5500016	KB 14-314	D	1/4" x 3 1/4"			1 13/16"		100/400
•5500020	KB 38-214	B	3/8" x 2 1/4"	1 5/8"	7/8"	3/16"	16	100/500
•5500022	KB 38-3	D	3/8" x 3"	1 5/8"	1 1/8"	15/16"	16	100/400
•5500024	KB 38-334	E	3/8" x 3 3/4"			1 11/16"		100/400
•5500038	KB 38-5	H	3/8" x 5"			2 15/16"		50/200
•5500052	KB 12-234	C	1/2" x 2 3/4"	2 1/4"	1 1/4"	1/16"	13	50/200
•5500056	KB 12-334	E	1/2" x 3 3/4"			15/16"		50/200
•5500050	KB 12-412	G	1/2" x 4 1/2"			1 11/16"		50/200
•5500060	KB 12-512	I	1/2" x 5 1/2"			2 11/16"		25/125
•5500070	KB 58-334	E	5/8" x 3 3/4"	2 3/4"	1 1/2"	5/16"	11	25/100
•5500072	KB 58-434	G	5/8" x 4 3/4"			1 5/16"		25/100
•5500082	KB 58-6	J	5/8" x 6"			2 9/16"		25/75
•5500087	KB 58-7	L	5/8" x 7"			3 9/16"		25/75
•5500094	KB 34-434 (2" Washer)	H	3/4" x 4 3/4"	3 1/4"	1 1/2"	11/16"	10	20/80
•5500100	KB 34-512	I	3/4" x 5 1/2"			1 7/16"		20/60
•5500104	KB 34-7	L	3/4" x 7"			2 15/16"		10/40
•5500116	KB 34-8	N	3/4" x 8"			3 15/16"		10/40
5500126	KB 1-6	J	1" x 6"	4 1/2"	2 1/4"	7/16"	8	5/25
5500130	KB 1-9	P	1" x 9"			3 7/16"		5/20
5500148	KB 114-9	P	1 1/4" x 9"	5 1/2"	3 1/4"	2 3/16"	7	5/20

Stainless Steel Kwik Bolt Sizes

Catalog No.	Description	Length ID Code	Size (Dia.) (Length)	Min. Embed.	Thread Length	Maximum Thickness Fastened	Threads Per Inch	Qty. Per Box/Ctn.
5500003	KB 304 SS14-134	A	1/4" x 1 3/4"	1 1/8"	3/4"	5/16"	20	100/900
5500010	KB 304 SS14-214	B	1/4" x 2 1/4"			13/16"		100/900
5500017	KB 304 SS14-314	D	1/4" x 3 1/4"			1 13/16"		100/400
5500021	KB 304 SS38-214	B	3/8" x 2 1/4"	1 5/8"	7/8"	3/16"	16	100/500
5500023	KB 304 SS38-3	D	3/8" x 3"	1 5/8"	1 1/8"	15/16"	16	100/400
5500025	KB 304 SS38-334	E	3/8" x 3 3/4"			1 11/16"		100/400
5500040	KB 304 SS38-5	H	3/8" x 5"			2 15/16"		50/200
5500054	KB 304 SS12-234	C	1/2" x 2 3/4"	2 1/4"	1 1/4"	1/16"	13	50/200
5500058	KB 304 SS12-334	E	1/2" x 3 3/4"			15/16"		50/200
5500051	KB 304 SS12-412	G	1/2" x 4 1/2"			1 11/16"		50/200
5500063	KB 304 SS12-512	I	1/2" x 5 1/2"			2 11/16"		25/125
5500071	KB 304 SS58-334	E	5/8" x 3 3/4"	2 3/4"	1 1/2"	5/16"	11	25/100
5500073	KB 304 SS58-434	G	5/8" x 4 3/4"			1 5/16"		25/100
5500081	KB 304 SS58-6	J	5/8" x 6"			2 9/16"		25/75
5500088	KB 304 SS58-7	L	5/8" x 7"			3 9/16"		25/75
5500095	KB 304 SS34-434	G	3/4" x 4 3/4"	3 1/4"	1 1/2"	11/16"	10	20/80
5500102	KB 304 SS34-512	I	3/4" x 5 1/2"			1 11/16"		20/60
5500106	KB 304 SS34-7	L	3/4" x 7"			2 15/16"		10/40
5500117	KB 304 SS34-8	N	3/4" x 8"			3 15/16"		10/40
5500128	KB 304 SS1-6	J	1" x 6"	4 1/2"	2 1/4"	7/16"	8	5/25
5500133	KB 304 SS1-9	P	1" x 9"			3 7/16"		5/20

Kwik Bolts can also be special ordered in AISI 316 stainless steel with AISI 304 wedges.

The Kwik Bolt is manufactured in Tulsa, Oklahoma

CDF COLLIDER DETECTOR	STEEL WALL SCREW DRIVE SUPPORT	R. J. WOODS DEC. 6, 1991

FINAL HAND CALCULATIONS: