CDF
COLLIDER DETECTOR

STEEL WALL
SCREW DRIVE SUPPORT

R. J. WOODS

REVISED LAYOUT

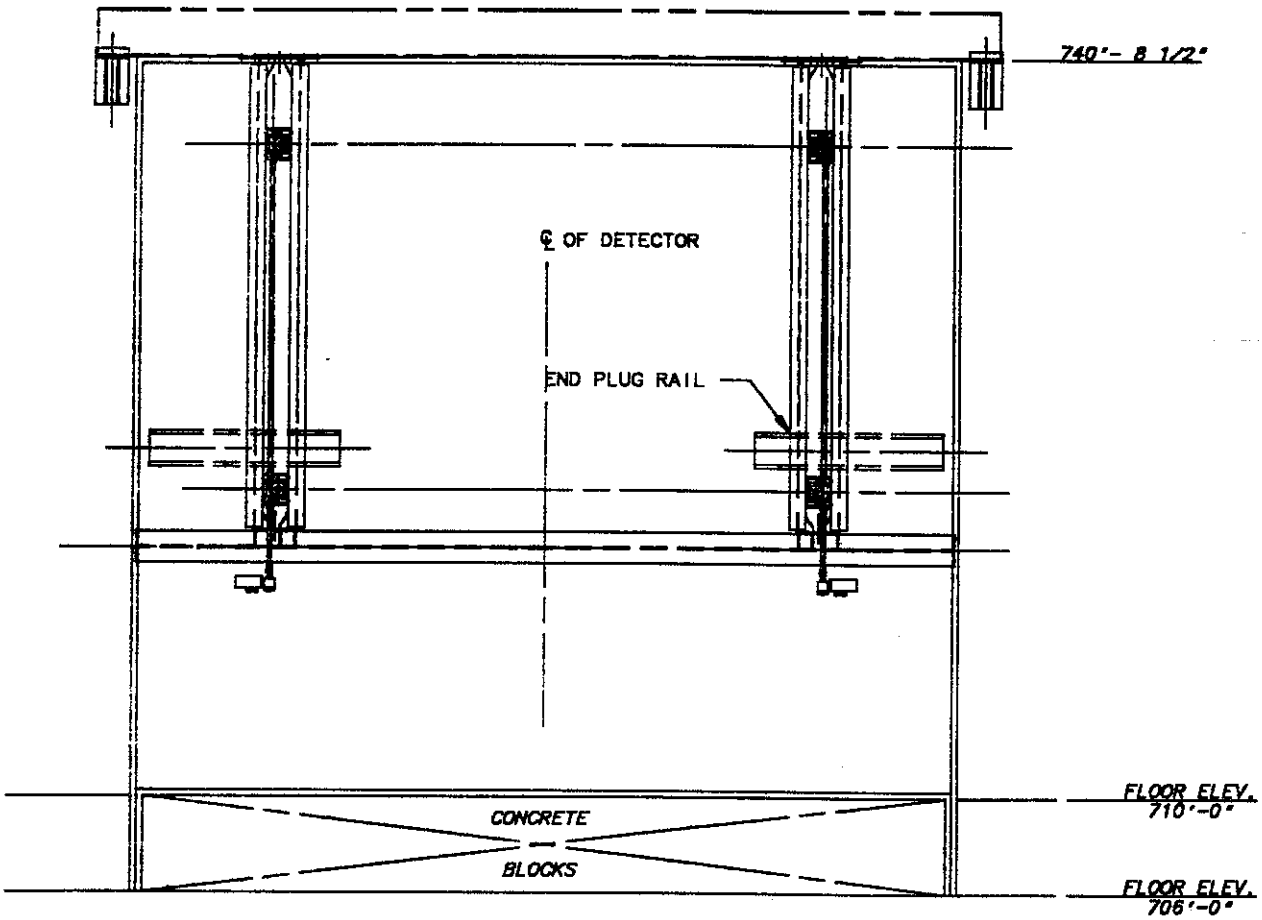

NEW SUPPORT LAYOUT:

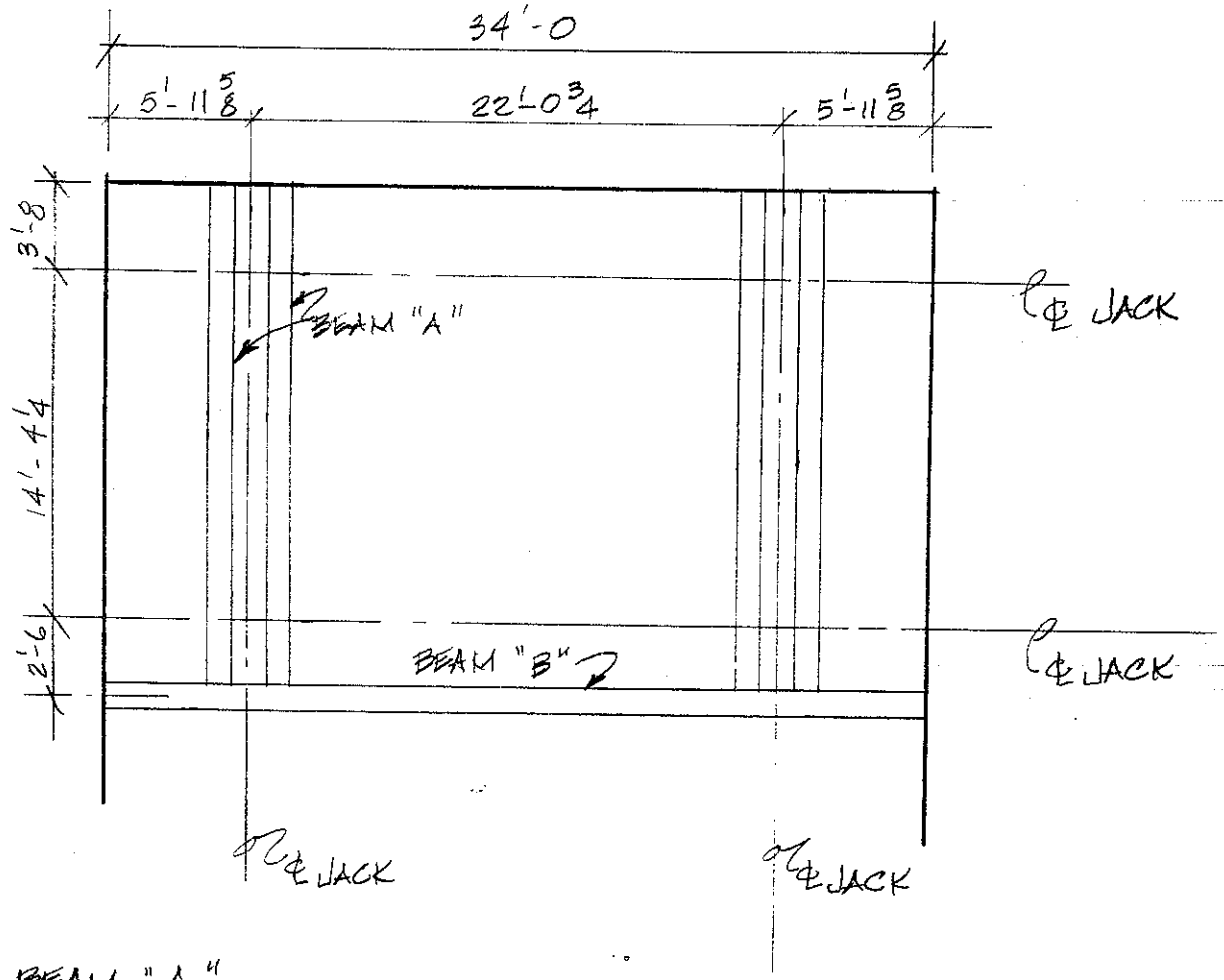

BEAM "A"

SPAN = 20'-6 1/4"

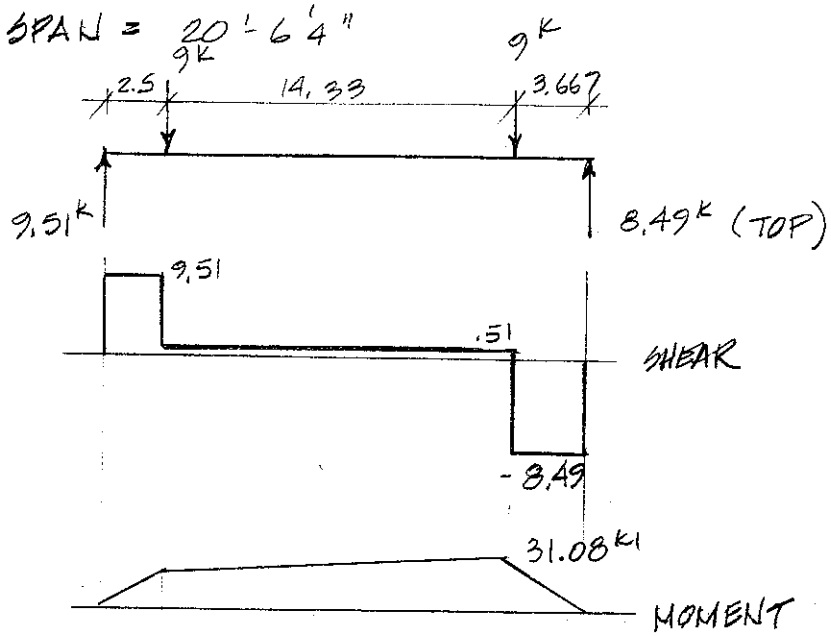

VERTICAL BEAM DESIGN:

$\ell = 20.5208$ $M = 31.08^{K'}$ AISC REF.

TRY W 10 X 26 $r_T = 1.54$

$\ell/r_T = 12(20.5208)/1.54 = 160 > 119$

$\therefore F_b = \frac{170 \times 10^3 C_b}{(\ell/r_T)^2} = \frac{170 \times 10^3 \times 1}{(160)^2}$ (1.5-6b)

$= 6.64$ KSI

$S_x = 31.08(12)/6.64$

$= 56.2 \text{ IN}^3 > 27.9 \text{ IN}^3$ N.G.

TRY W 10 X 39 $r_T = 2.16$

$\ell/r_T = 12(20.5208)/2.16 = 114 < 119$

$\therefore F_b = \left[\frac{2}{3} - \frac{F_y(\ell/r_T)^2}{1530 \times 10^3 C_b}\right] F_y$ (1.5-6a)

$= \left[\frac{2}{3} - \frac{36(114)^2}{1530 \times 10^3 (1)}\right] 36$

$= 12.99$ KSI

$S_x = 31.08(12)/12.99 = 28.7 < 42.1$ OK

TRY W10 X 33 $r_T = 2.14$

$\ell/r_T = 12(20.5208)/2.14 = 115$

$\therefore F_b = \left[\frac{2}{3} - \frac{F_y(\ell/r_T)^2}{1530(10)^3(1)}\right] F_y$ (1.5-6a)

$= \left[\frac{2}{3} - \frac{36(115)^2}{1530 \times 10^3 (1)}\right] 36$

$= 12.78$ KSI

$S_x = 31.08(12)/12.78 = 29.17 \text{ IN}^3 < 35.0$ OK

APPROX. DEFLECTION:

$\Delta = \frac{9(3.667)(1728)}{24(29{,}000)(170)} \left(3(20.5208)^2 - 4(3.666)^2\right)$

$= 0.58'' < 1''$ OK

BEAM "B"

HORIZONTAL LOAD:

SPAN = 34'-0

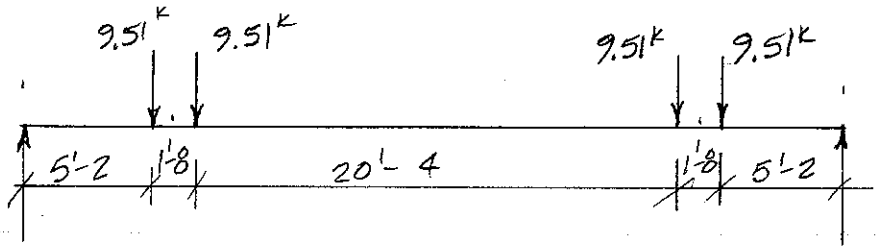

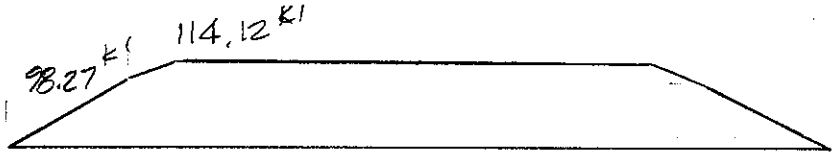

TRY W14 x 159

AISC REF.

$\ell/r_T = 34(12)/4.30 = 94.88$

(1.5-6a)

$\therefore F_b = \left[\frac{2}{3} - \frac{F_y(\ell/r_T)^2}{1530 \times 10^3 C_b}\right] F_y$

$= \left[\frac{2}{3} - \frac{36\,(94.88)^2}{1530 \times 10^3 (1)}\right] 36 = 16.38^{KSI}$

S_x REQ'D $= 114.12(12)/16.38$

$= 83.6\ IN^3 < 254\ IN^3$ PROVIDED ok

CHECK COMBINED LOADING:

VERTICAL LOAD:

CONCENTRATED = 33(20.5208) = 677# SAY 700#

UNIFORM = 159#/FT

VERTICAL LOAD:

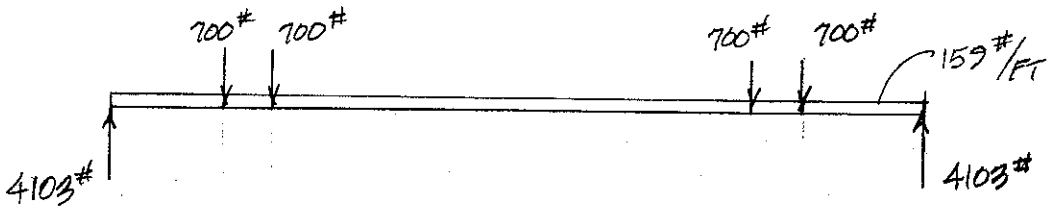

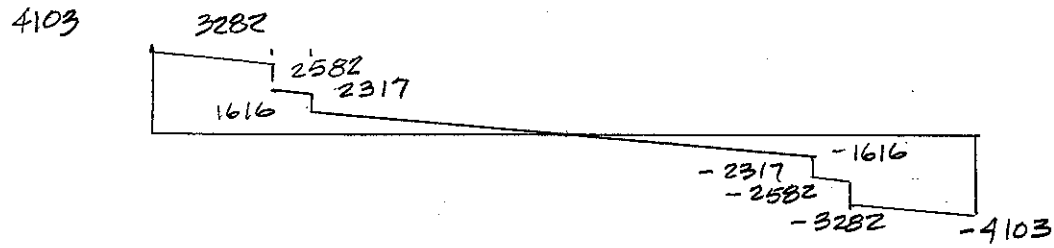

$$M = 5.1667\left(\frac{4103+3282}{2}\right) + 1.6667\left(\frac{2582+2317}{2}\right) + 0.5(10.1667)(1616)$$

$$= 19078 + 4083 + 8215$$

$$= 31376 \text{ \#FT}$$

$$f_{b_V} = 31376(12)/96.2(1000)$$

$$= 0.33 \text{ KSI}$$

$$f_{b_H} = 114.12(12)/254 = 5.39$$

$$0.33/27 + 5.39/16.38 = 0.341 < 1.0 \quad \underline{\underline{OK}}$$

APPROX. HORIZ. DEFLECTION:

$$\text{EQUIV. UNIF. LOAD} = 114.12(8)/(34)^2$$

$$= 0.790 \text{ KLF}$$

$$\Delta = \frac{5(.790)(34)^4(1728)}{384(29{,}000)(1900)}$$

$$= 0.43''$$

TOTAL APPROX. HORIZ. DEFLECTION:

VERTICAL BEAMS = 0.58
HORIZ. BEAM = 0.43
1.01 ≈ 1" $\underline{\underline{OK}}$

ANGLE SUPPORT FOR SCREW JACK (BETWEEN VERT. BEAMS):

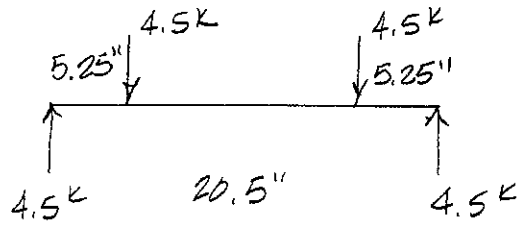

$M = Pa$
$= 4.5(5.25)$
$= 23.6$ K-IN

TRY 2L'S 3x3x½

FROM AISC 1.9.1.2 $\quad w/t \le 76/\sqrt{F_y}$

$6/1.0 \overset{?}{\le} 76/\sqrt{36}$

$6 \le 12.67 \quad \therefore$ FULLY EFFECTIVE

$76(bQ)/\sqrt{F_y} = 76(3.0)/\sqrt{36}$

$= 38" > 20.5"$ ok

$\therefore F_b = 0.60(36) = 21.6$ KSI

$S_{REQ'D} = 23.6/21.6 = 1.09$ IN^3 < 1.60 IN^3 PROVIDED

$f_b = 23.6/1.6 = 14.75$ KSI

LOAD DUE TO CANTILEVER OF SCREW JACK:

$250\#(10.0)' = 2500\#'$

EQUIV. LOAD $= 2500(12)/10 = 3000\#$ < $4500\#$ ok

SCREW JACK SUPPORT PLATE:

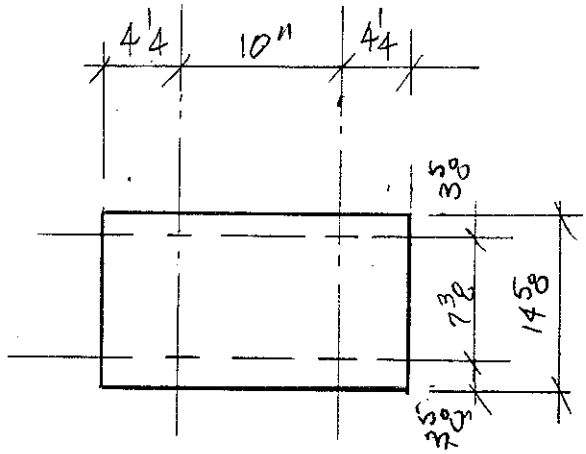

PLATE SPAN = 10.0'
LOAD = 18.0 K

$M = 18(14.625)/4 = 65.8$ K-IN

TRY 1" PLATE

$A = 1.0(18.5) = 18.5 \text{ IN}^2$

$b = 18.5(1.0)^2/6 = 3.083 \text{ IN}^3$

$I_x = 18.5(1.0)^3/12 = 1.54 \text{ IN}^4$

$r = \sqrt{I_x/A} = \sqrt{\frac{1.54}{18.5}} = .289$

$\ell/r_T = 14.625/0.289 = 50.6$

$$F_b = \left[\frac{2}{3} - \frac{F_y(\ell/r_T)^2}{1530 \times 10^3 C_b}\right] F_y = \left[\frac{2}{3} - \frac{36(50.6)^2}{1530 \times 10^3}\right] 36 = 21.8 \text{ KSI}$$

$b_{x\,REQ'D} = 65.8/21.8 \quad 3.014 \text{ IN}^3 < 3.083$ PROV. <u>OK</u>

$$\Delta = \frac{18.0(14.625)^3}{48(29{,}000)(1.54)} = 0.026'' \quad \underline{OK}$$

INVESTIGATE LOWER PLACEMENT OF HORIZONTAL BEAM:

VERTICAL BEAM DESIGN (BEAM "A"):

SPAN = 27.0'

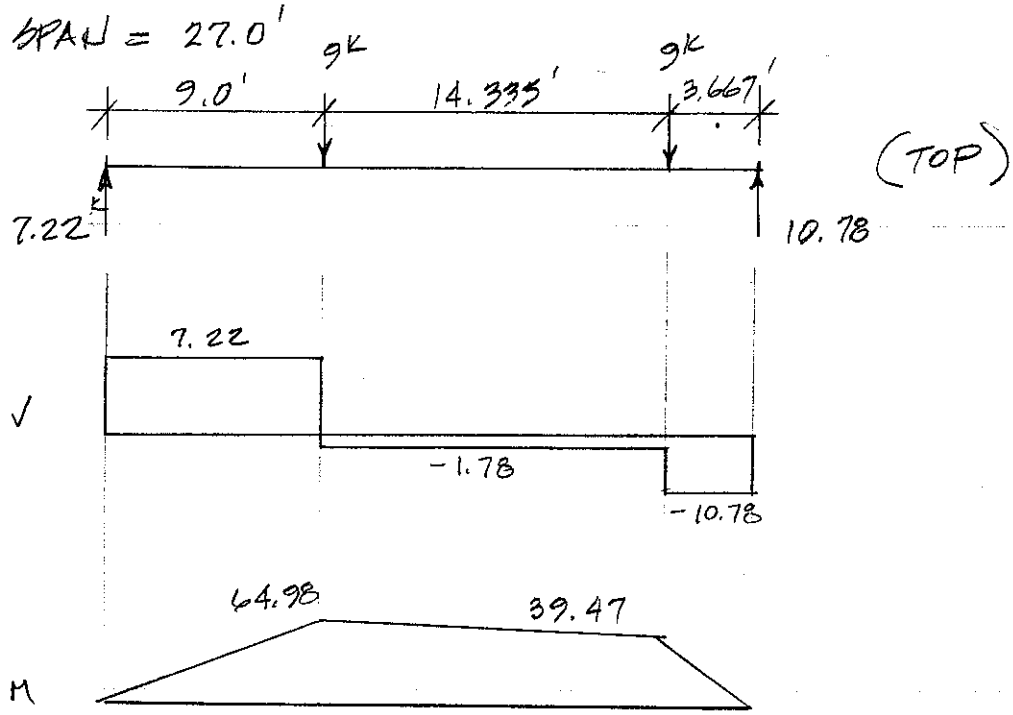

TRY W 10 x 49

$$\ell/r_T = 27(12)/2.74 = 118$$

$$F_b = \left[\frac{2}{3} - \frac{F_y(\ell/r_T)^2}{1530\times10^3 C_b}\right]36$$

$$= \left[\frac{2}{3} - \frac{36(118)^2}{1530\times10^3(1)}\right]36 = 12.21 \text{ ksi}$$

$$\text{OR } F_b = \frac{12\times10^3 C_b}{\ell d/A_f}$$

$$= \frac{12\times10^3(1)}{324(2.03)} = 18.24 \text{ ksi}$$

S_x REQ'D = $65(12)/18.24 = 42.8 \text{ IN}^3 < 49.1$ PROVIDED

OK.

EQUIV. UNIFORM LOAD = $65(8)/(27)^2$
= 0.71 K/FT

APPROX $\Delta = \dfrac{5(0.71)(27)^4(1728)}{384(29{,}000)(272)} = 1.07''$ N.G.

TRY W14 × 53

$$\ell/r_T = 27(12)/2.15 = 151$$

$$F_b = \frac{170 \times 10^3 C_b}{(\ell/r_T)^2} = \frac{170 \times 10^3 (1)}{(151)^2} = 7.46 \text{ KSI}$$

$$\text{OR } F_b = \frac{12 \times 10^3 (C_b)}{\ell d/A_f} = \frac{12 \times 10^3 (1)}{27(12)(2.62)} = 14.14 \text{ KSI} \leftarrow \text{USE}$$

$$S_x \text{ REQ'D} = 65(12)/14.14 = 55.2 \text{ IN}^3 < 77.8 \text{ PROVIDED}$$

$$\text{APPROX } \Delta = \frac{5(.71)(27)^4(1728)}{384(29{,}000)(541)} = 0.54'' \quad \underline{\underline{\text{ok}}}$$

USE W14 × 53

W14 x 159 :

REACTION = 19087# HORIZ.
141# VERT

ASSUME 3/4" ϕ BOLTS:
NO. REQ'D FOR SHEAR. = 19087/4280
= 4.46 ∴ 5 BOLTS REQ'D

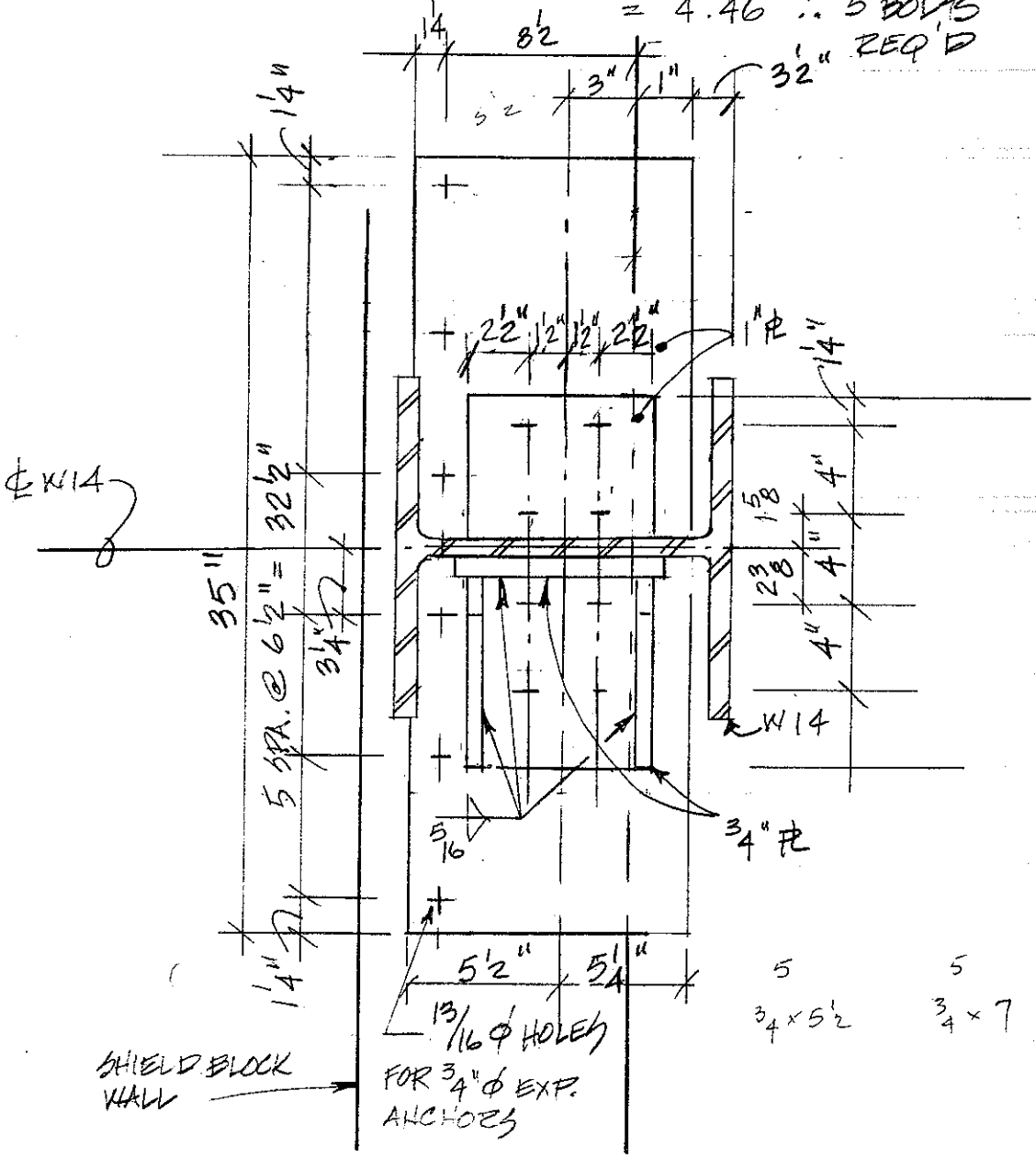

CONSERVATIVELY ASSUME THAT BOLTS ON INSIDE FACE CARRY ONLY 1/2 ACTUAL LOAD (THESE BOLTS HAVE SHEAR CAPACITY TO CARRY FULL LOAD). THEN FRONT FACE CARRIES OTHER 1/2 LOAD IN TENSION.

19087/2 = 9544#

NO. BOLTS REQ'D = 9544/2540 = 3.76 ∴ 5 BOLTS

PLATE BENDING:

$M = 9544(5) = 47720$ # IN

TRY 1" PLATE $S_x = 26(1)^2/6$
$= 4.33$ IN^3

$f_b = 47720/4.33 = 11{,}012$ PSI

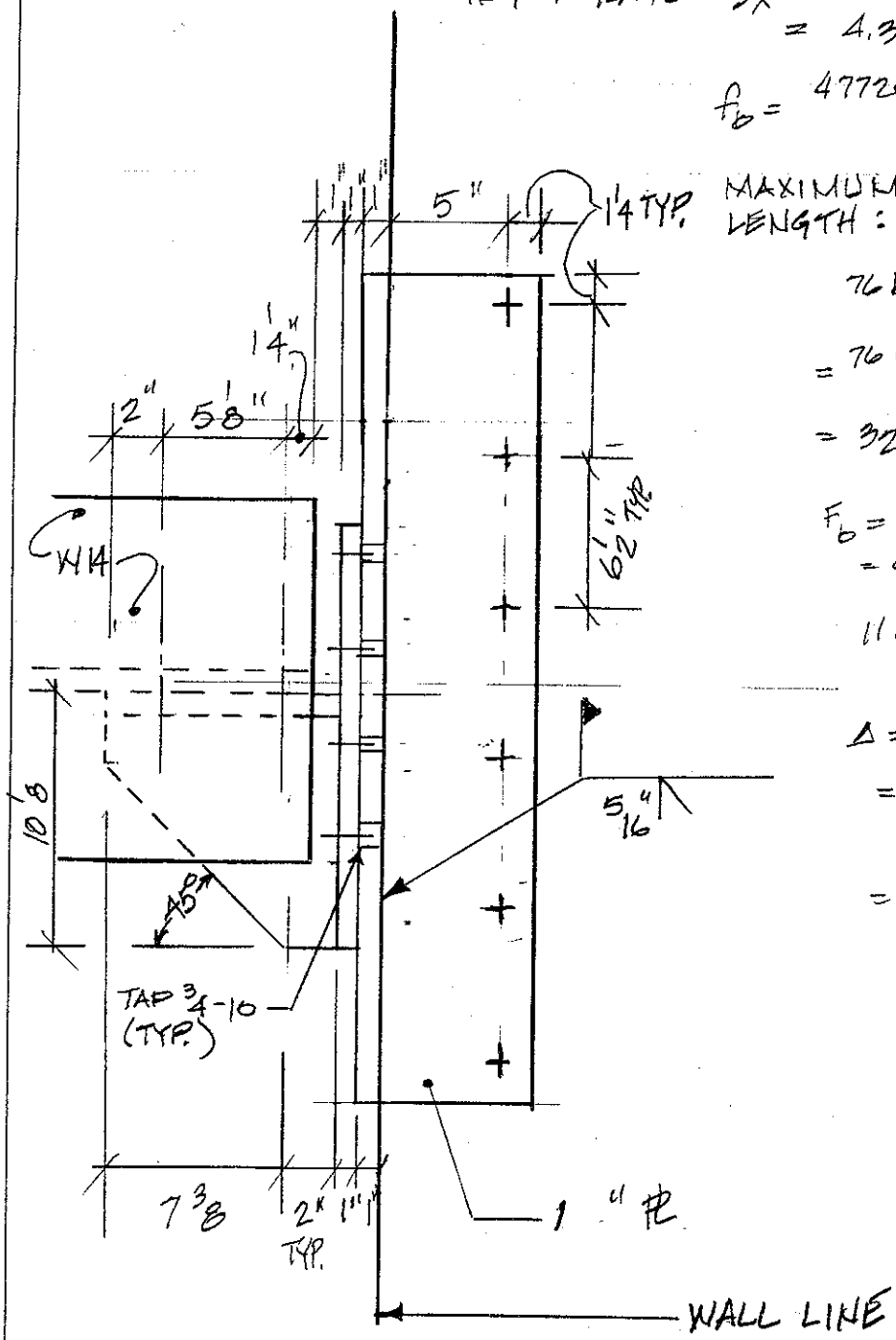

MAXIMUM UNBRACED LENGTH:

P. 5-30
1.9.1.2

$76 b_f/\sqrt{F_y}$

$= 76(26)/\sqrt{36}$

$= 329" > 5"$ ok

$F_b = 0.6 F_y$
$= 0.6(36) = 21.6$ KSI

$11.0 < 21.6$ ok

$\Delta = Pl^3/3EI$

$= \dfrac{9.544(5)^3}{3(29{,}000)(2.17)}$

$= 0.0063"$ ok

BEAM CONNECTIONS:

W 10 x 33:

TOP @ CONC. WALL: SINGLE PLATE FOR 2 BEAMS:

REACTION = 8457# + 8457# = 16914# HORIZ
2734# + 1417# = 4151# VERT

TRY 6 - 3/4" Φ EXP. ANCHORS @ 3 1/4" EMBEDMENT

ALLOW SHEAR = 4280# / BOLT
ALLOW TENS. = 2540# / BOLT

$16914/6(4280) + 4151/6(2540) = 0.931 < 1.0$ ok

BOTTOM @ W 14:

REACTION = 9543# HORIZ. (Z)
2104# HORIZ. (X)

TRY 4 - 3/4" Φ A 325 F BOLTS

ALLOW SHEAR = 5500 #/BOLT
ALLOW TENS. = 19400#/BOLT

$9543/4(5500) + 2104/4(19400) = .461 < 1.0$ ok

BOTTOM PLATE

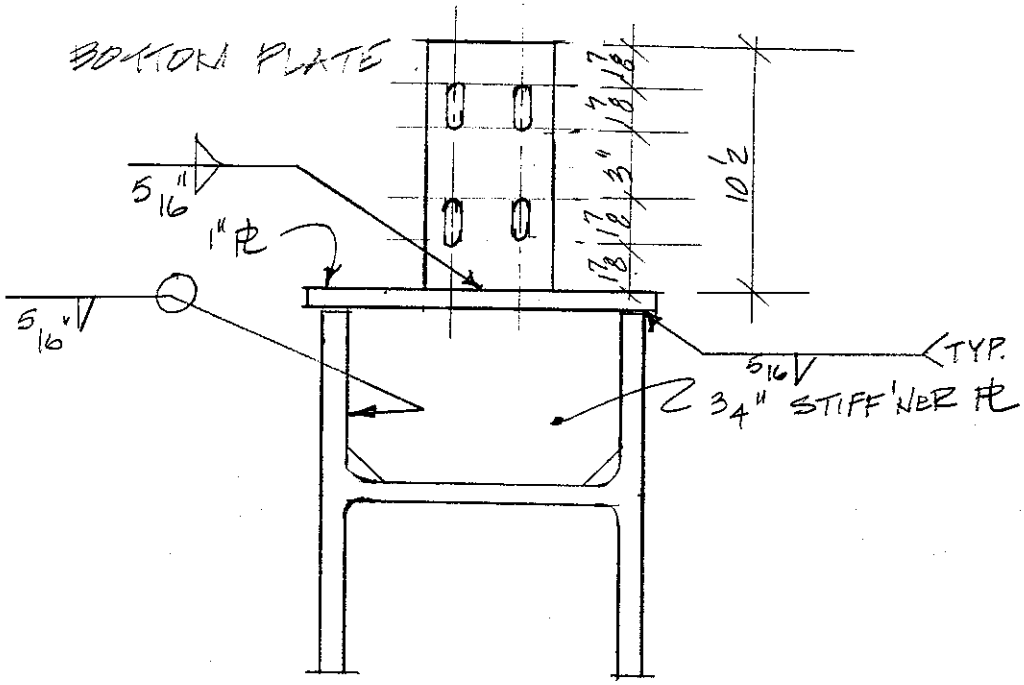

$M = 2104(10.5/2) = 11046\#\,IN$

$S_{REQ'D} = 11046/27000 = 0.409\,IN^3$

$5.5\,(t)^2/6 = .409$

$t = 0.67''$ USE $\frac{3}{4}''$ PL

LENGTH OF WELD FOR Z DIRECTION SHEAR:

$9543/0.928(5) = 2.1'' < 10''$ PROVIDED OK

TOP PLATE:

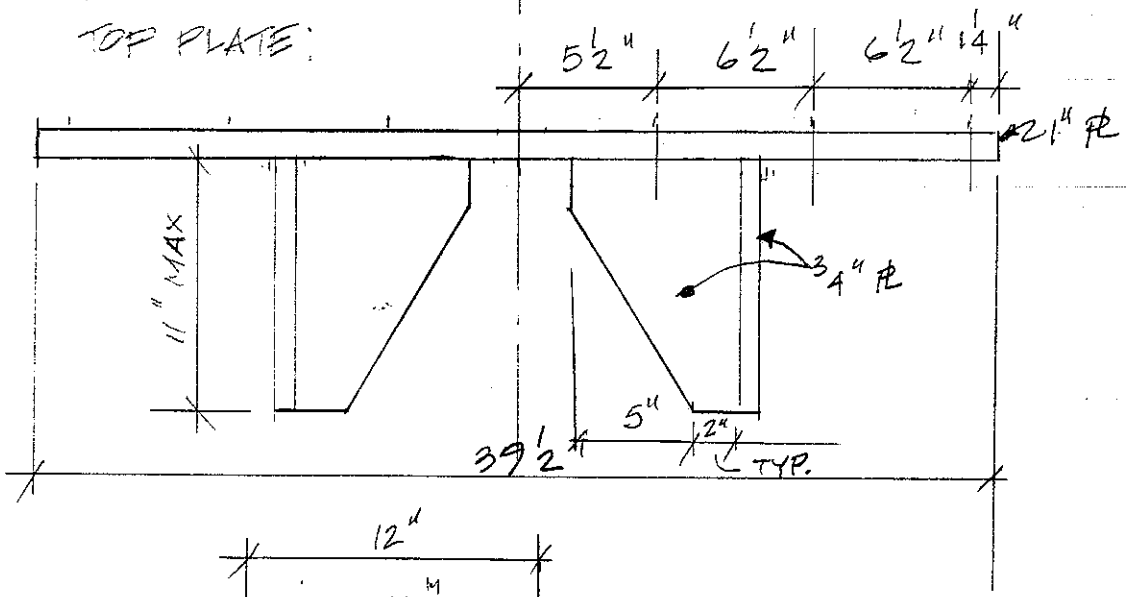

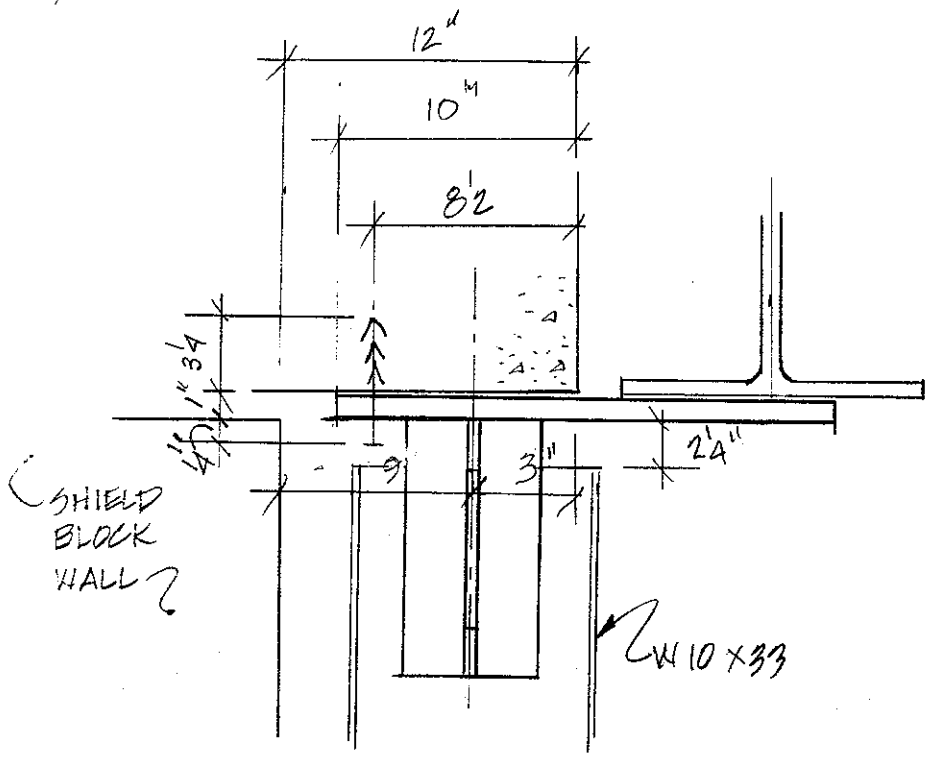

REDESIGN USING HILTI HFA ANCHORS (FOR DYNAMIC LOADING)
3/4" ϕ ANCHOR 4000 PSI CONCRETE

ANCHOR EDGE DIST

		SHEAR	TENSION
MAX LOAD	10"	7315 (100%)	9750 (100%)
MIN	3 1/4"	3658 (-50%)	5850 (-40%)

ANCHOR SPACING

MAX LOAD	6 5/8"	100%	100%
MIN	3 1/4"	-30%	-30%

ALLOW. SHEAR:

FOR 8 1/2" EDGE DIST. & 6 1/2" SPACING:

$(10 - 8.5)/6.75 = .22$

$.22(50\%) = 11\%$ REDUCTION FOR EDGE DIST.

$(6.625 - 6.5)/3.375 = 0.037$

$.037(30\%) = 1.1\%$ REDUCTION FOR SPACING

$7315 - ((0.11)(7315) + (0.011)(7315)) =$

$7315 - 885 = \underline{\underline{6430\#}}$ SHEAR

ALLOW TENSION:

FOR 8 1/2 EDGE DIST & 6 1/2 SPACING

$(10 - 8.5)/6.75 = 0.22$

$.22(40\%) = 8.8\%$ REDUCTION FOR EDGE DIST

$(6.625 - 6.5)/3.375 = 0.037$

$0.037(30\%) = 1.1\%$ REDUCTION FOR SPACING

$9750 - ((0.088)(9750) + (0.011)(9750)) =$

$9750 - 965 = \underline{\underline{8785\#}}$ TENSION

FOR 5" EDGE DIST. & 6½" SPACING:

$(10-5)/6.75 = 0.74$

$0.74(50\%) = 37\%$ REDUCTION FOR EDGE DIST

$(6.625-6.5)/3.375 = 0.037$

$0.037(30\%) = 1.1\%$ REDUCTION FOR SPACING

$7315 - ((.37)(7315) + (0.011)(7315)) =$

$7315 - 2787 = \underline{\underline{4528^{\#}}}$ SHEAR

$(10-5)/6.75 = 0.74$

$0.74(40\%) = 29.6\%$ REDUCTION FOR EDGE DIST

$(6.625-6.5)/3.375 = 0.037$

$0.037(30\%) = 1.1\%$ REDUCTION FOR SPACING

$9750 - (0.296(9750) + (0.011)(9750)) =$

$9750 - 2993 = \underline{\underline{6757^{\#}}}$ TENSION

W14 × 159 CONNECTION:

HORIZ LOAD (LARGE PLATE)

$19087/6430 = 2.968 < 4$ BOLTS.

USE 4 BOLTS

HORIZ LOAD (SMALL PLATE)

$9544/6757 = 1.413 < 4$ BOLTS

USE 4 BOLTS

CHECK PLATE BENDING W/ 4 BOLT CONN.

$M = 9544(5) = 47\,720$ #IN

NEW PLATE LENGTH $= 3(6\tfrac{1}{2}) + 2(1\tfrac{1}{4})$
$= 22''$

$S_x = 22(1)^2/6 = 3.67$ IN^3

$f_b = 47\,720/3.67 = 13015$ PSI $< 21{,}600$

OK

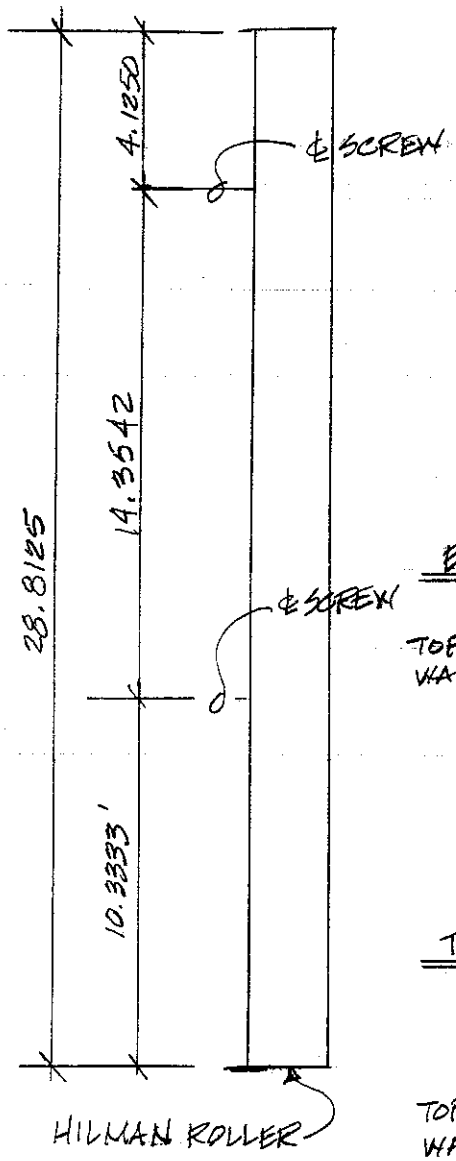

WT. OF WALL = 300 TONS

= 600,000 #

COEF. OF FRICTION FOR HILMANS = 5%

600,000 (0.05) = 30,000 # TOTAL

LOAD ON EA. SIDE = 30000/2

= 15000 #

BALANCED CONDITION

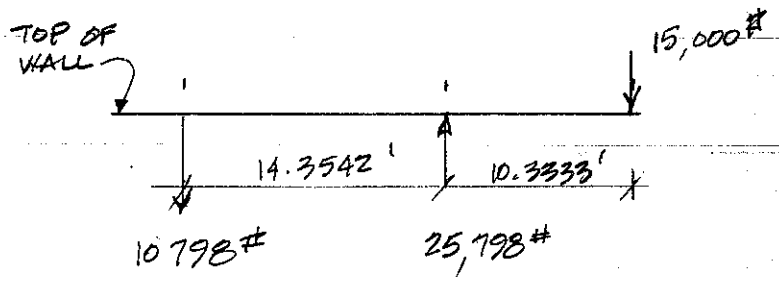

TWO HORIZ. LOADS

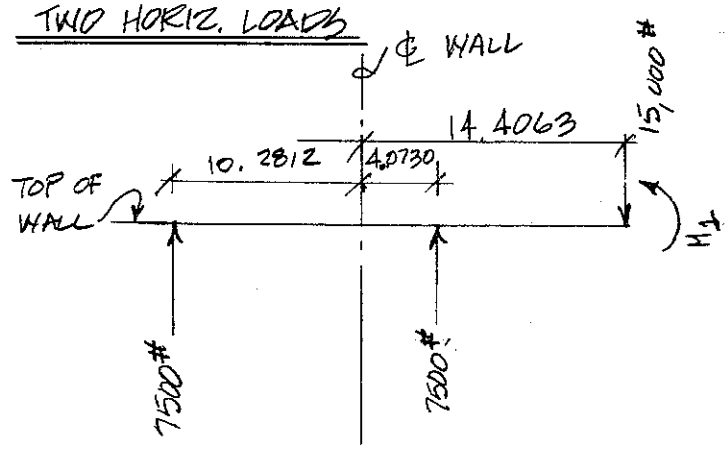

$$\Sigma M_{\text{℄ WALL}} = 14.4063(15{,}000) + 10.2812(7500) - 4.0730(7500) - M_1$$

$$M_1 = 262{,}656 \ \#'$$

AT BOTTOM OF WALL:

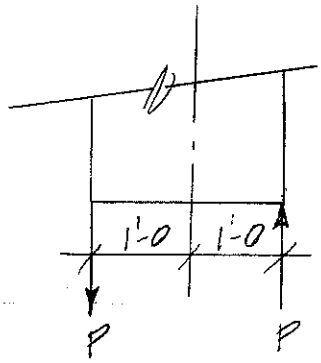

$P = 262656/2.0$

$= 131328\ \#$

ADD'L HORIZ. LOAD REQ'D TO MOVE WALL:

$131328\,(0.05) = 6566\ \#$

LOAD ON EA. JACK $= 6566/2 = 3283\ \#$

$\Sigma M_{\mathcal{L}\ WALL} = 14.4063(15{,}000) + 10.2812(10783) - 4.073(10783) - M_1'$

$M_1' = 283{,}038\ \#'$ N.G.

$P' = 283{,}038/2.0 = 141{,}519\ \#$

ADD'L HORIZ. LOAD REQ'D TO MOVE WALL:

$141519\,(0.05) = 7076\ \#$

LOAD ON EA. JACK $= 7076/2 = 3538\ \#$

ADD LOAD TO LOWER JACK ONLY:

$\Sigma M_{\mathcal{L}\ WALL} = 14.4063(15{,}000) + 10.2812(7500) - 4.073(7500 + 6566) - M_1''$

$M_1'' = 235{,}913\ \#'$

$P'' = 235{,}913/2 = 117{,}957\ \#$ N.G.

PLEASE NOTE: SCREW DRIVE SUPPORT IS DESIGNED FOR A MAXIMUM OF 15,000# AT EA. JACK. ABOVE CALCULATIONS INDICATE THAT THIS VALUE WILL BE EXCEEDED IN ORDER TO MOVE WALL!

CDF
STEEL WALL
SCREW DRIVE

A.S2.

1

SYSTEM SCHEMATIC

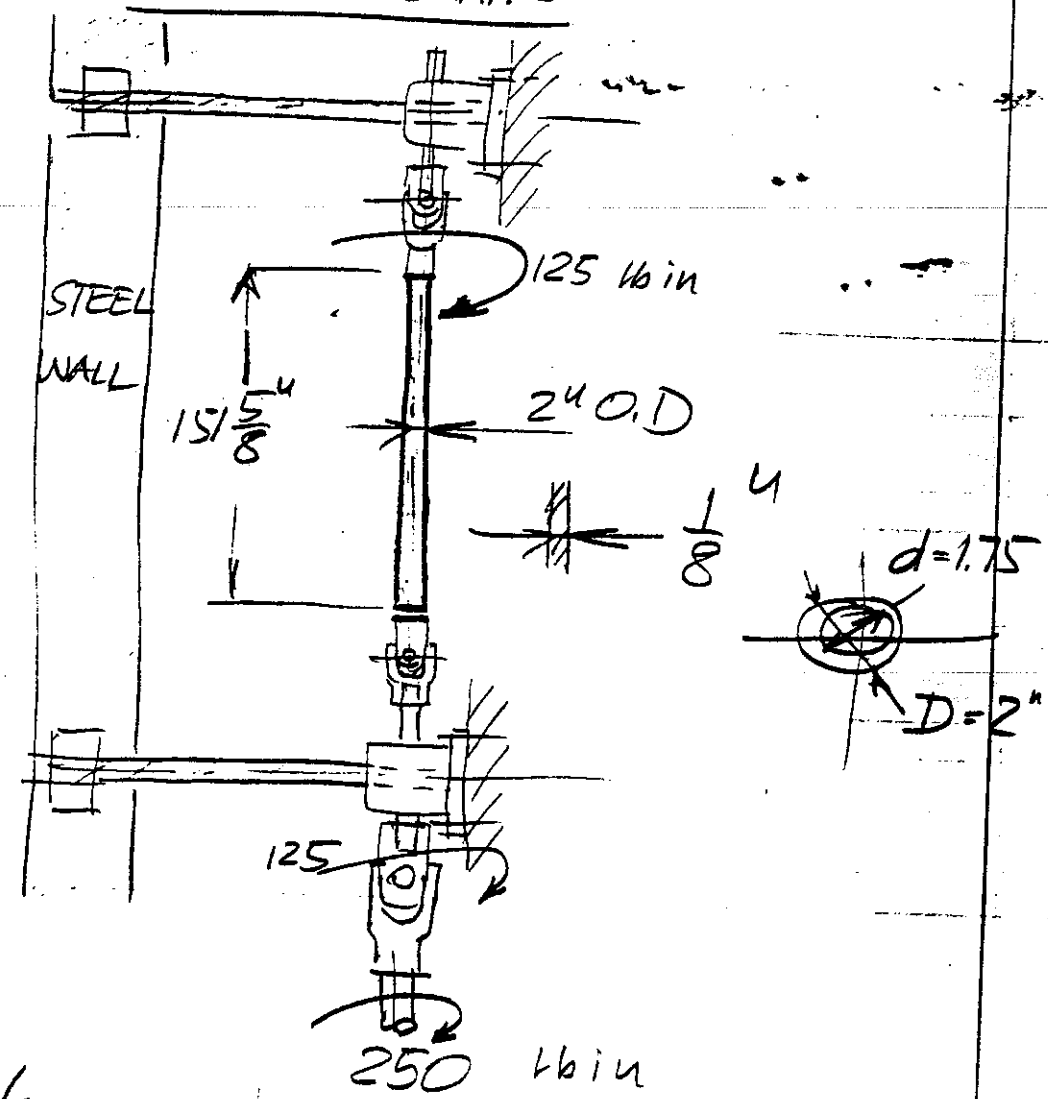

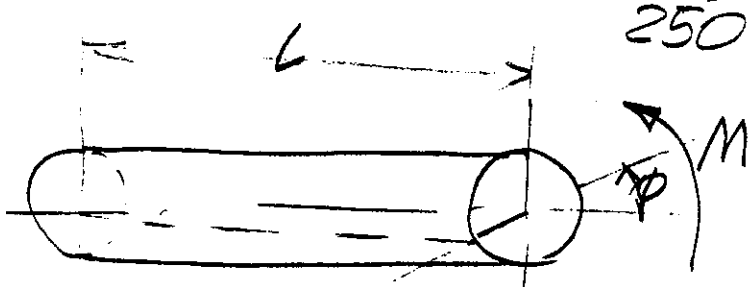

ANGLE OF TWIST

$$\phi = \frac{M \cdot L}{J\,G}$$

$$J = \frac{\pi}{32}(D^4 - d^4)$$

G - SHEAR MODULUS

$$G = 0.385 \times E$$

$L = 151.625"$

$M = 125$

$J = 0.650\ in^4$

$G = 11550000\ psi$

February 28, 1992

To: Peter Garbincius, Head Research Division
Stephen Holmes, Head Accelerator Division

From: Herman J. Stredde, Chairman CDF Mech. Safety Panel

Subject: CDF Muon Wall Drive Supports

On February 17, the safety panel met with Robert Woods of the Research Division Mechanical Department for the purpose of reviewing the North wall drive and support system. The panel agreed that the design met the AISC Code for structural work and with the tightness of the shutdown schedule I gave CDF permission to begin construction of the individual items. Elmer Majors of the Construction Engineering Department was contacted by R. woods concerning the connection of the drive system to an existing beam in the CDF facility. Elmer approved the design and a copy of his approval memo is attached to this memo.

On February 24 the safety panel met with Andrew Szymulanski of the Research Division Mech. Department to review the South wall drive and support system. The panel agreed that the design did meet the AISC code.

The safety panel concludes that both designs are adequate and safe for operation.

cc
J. Grimson
H. Jensen
P.Lukins
F. Lange
A. Lee
R. Woods
A. Szmulanski

Fermilab

December 12, 1991

To: Robert J. Woods

From: Elmer Major EJM

Subject: **Connection to Existing Beam CDF Collision Hall**

I have reviewed the calculations and sketches you sent me and see no reason not to proceed with the fabrication.

EM/jk

cc: J. Kilmer
W. Nestander