InFrame Analysis Input

--UNITS--

Inches and Pounds

--GENERAL INFORMATION--

Number of Materials = 1
Number of Geometries = 2
Number of Nodes = 23
Number of Elements = 22
Number of Element End Releases = 4

--Material Data--

Material Number = 1
Material Name = Carbon-A36,Gr.36 AI

Young's Modulus	(psi)	= 2.90E+007
Shear Modulus	(psi)	= 1.12E+007
Poisson's Ratio		= 2.94E-001
Yield Strength	(psi)	= 36000.000
Ultimate Strength	(psi)	= 58000.000
Thermal Cooef.		= 6.50E-006
Density	(lb/in^3)	= 2.82E-001

--Shape Data--

```
                    Shape Number =  1
                      Shape Name =  W10X33
                    Area  (in^2) = 9.710
     Shear area in b direction  (in^2) = 2.822
     Shear area in c direction  (in^2) = 6.888
Moment of Inertia about a axis  (in^4) = 5.80E-001
Moment of Inertia about b axis  (in^4) = 36.600
Moment of Inertia about c axis  (in^4) = 170.000
```

```
                    Shape Number =  2
                      Shape Name =  TUBE1
                    Area  (in^2) = 34.000
     Shear area in b direction  (in^2) = 24.000
     Shear area in c direction  (in^2) = 10.000
Moment of Inertia about a axis  (in^4) = 512.000
Moment of Inertia about b axis  (in^4) = 591.000
Moment of Inertia about c axis  (in^4) = 238.000
```

```
                    Shape Number =  3
                      Shape Name =  TUBE2
                    Area  (in^2) = 58.000
     Shear area in b direction  (in^2) = 38.000
     Shear area in c direction  (in^2) = 20.000
Moment of Inertia about a axis  (in^4) = 2703.000
Moment of Inertia about b axis  (in^4) = 2764.000
Moment of Inertia about c axis  (in^4) = 1319.000
```

```
                    Shape Number =  4
                      Shape Name =  TUBE3
                    Area  (in^2) = 52.000
     Shear area in b direction  (in^2) = 32.000
     Shear area in c direction  (in^2) = 20.000
Moment of Inertia about a axis  (in^4) = 2094.000
Moment of Inertia about b axis  (in^4) = 1809.000
Moment of Inertia about c axis  (in^4) = 1137.000
```

Project: CDF MOUN WALL TRANSPORTER Model: D:\INERTIA\muonw Thu Jan 16 11:34

```
                                Shape Number =  5
                                  Shape Name =  W14X159
                                Area  (in^2) = 46.700
     Shear area in b direction  (in^2) = 11.160
     Shear area in c direction  (in^2) = 35.540
Moment of Inertia about a axis  (in^4) = 19.800
Moment of Inertia about b axis  (in^4) = 748.000
Moment of Inertia about c axis  (in^4) = 1900.000
```

Project: CDF MOUN WALL TRANSPORTER Model: D:\INERTIA\muonw Thu Jan 16 11:34

--NODE INFORMATION--

Node	X-coor in	Y-coor in	Z-coor in	DOF
6	-174.000	124.000	0.000	000000
7	-143.975	124.000	0.000	000000
8	-123.515	124.000	0.000	000000
9	0.000	124.000	0.000	000100
10	123.515	124.000	0.000	000000
11	143.975	124.000	0.000	000000
29	143.980	152.750	0.000	000000
30	143.980	325.000	0.000	000000
31	143.980	368.500	0.000	111010
32	123.510	152.750	0.000	000000
33	123.510	325.000	0.000	000000
34	123.510	368.500	0.000	111010
35	-123.510	152.750	0.000	000000
36	-123.510	325.000	0.000	000000
37	-123.510	368.500	0.000	111010
38	-143.980	152.750	0.000	000000
39	-143.980	325.000	0.000	000000
40	-143.980	368.500	0.000	111010
41	203.000	124.000	0.000	111000
42	174.000	124.000	0.000	000000
43	190.000	124.000	0.000	000000
44	-190.000	124.000	0.000	000000
45	-203.000	124.000	0.000	111000

Project: CDF MOUN WALL TRANSPORTER Model: D:\INERTIA\muonw Thu Jan 16 11:34

--ELEMENT INFORMATION--

Elem	Type	Connectivity		Mat#	Sec#	Angle, degrees	Flip
5	BEAM	6	7	1	5	90	off
6	BEAM	7	8	1	5	90	off
7	BEAM	8	9	1	5	90	off
8	BEAM	9	10	1	5	90	off
9	BEAM	10	11	1	5	90	off
33	BEAM	11	29	1	1	90	off
34	BEAM	29	30	1	1	90	off
35	BEAM	30	31	1	1	90	off
36	BEAM	10	32	1	1	90	off
37	BEAM	32	33	1	1	90	off
38	BEAM	33	34	1	1	90	off
39	BEAM	8	35	1	1	90	off
40	BEAM	35	36	1	1	90	off
41	BEAM	36	37	1	1	90	off
42	BEAM	7	38	1	1	90	off
43	BEAM	38	39	1	1	90	off
44	BEAM	39	40	1	1	90	off
45	BEAM	11	42	1	5	90	off
46	BEAM	42	43	1	5	90	off
47	BEAM	41	43	1	5	90	off
48	BEAM	6	44	1	5	90	off
49	BEAM	44	45	1	5	90	off

--Element End Release Data--

element boundary conditions

33

0

1

36

0

1

39

0

1

42

0

1

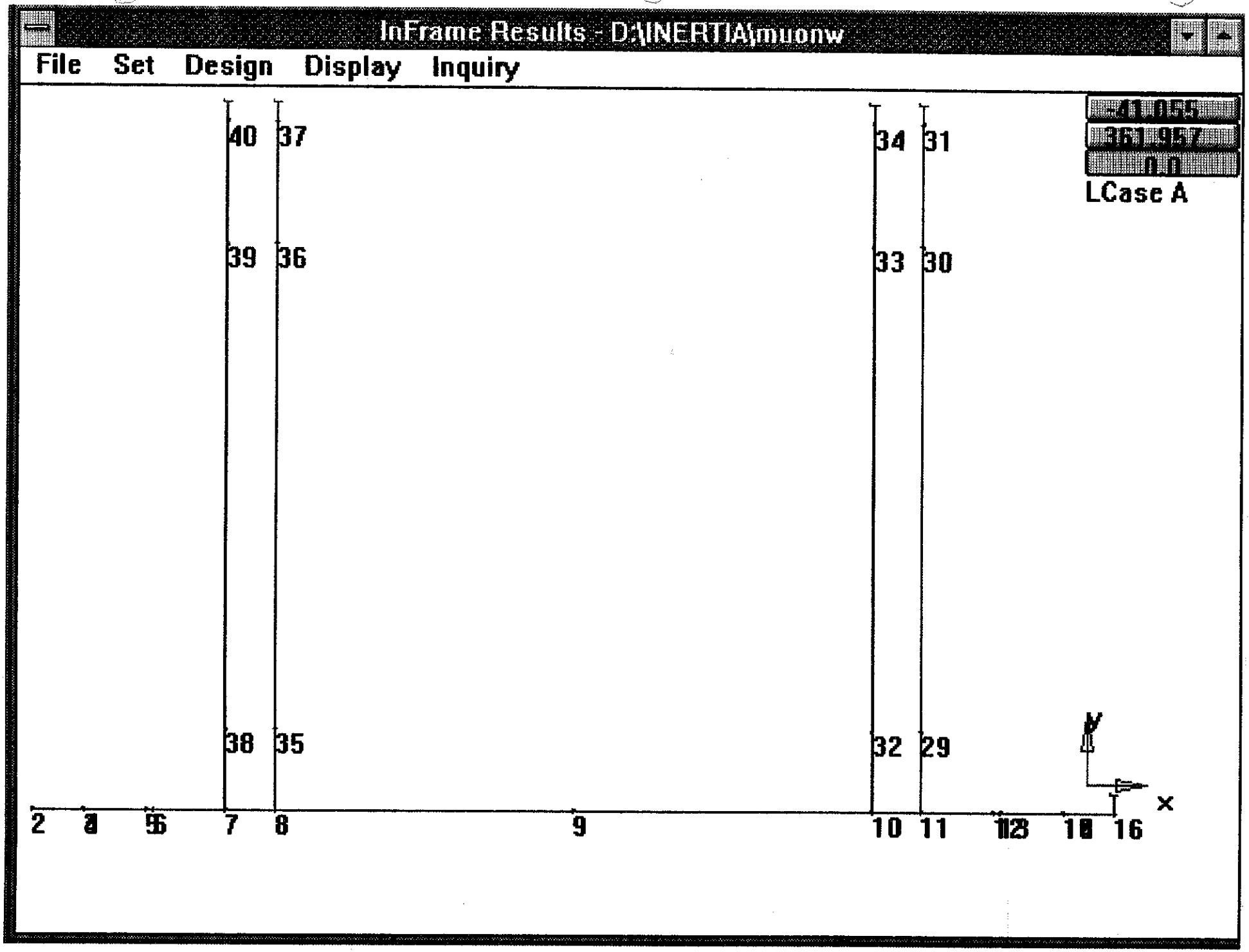
InFrame Results - D:\INERTIA\muonw
File
Set
Design
Display
Inquiry
LCase A
40
37
39
36
38
35
34
31
33
30
32
29
2
7
8
9
10
11
16
x

InFrame Analysis Output

Project: CDF MOUN WALL TRANSPORTER Model: D:\INERTIA\muonw Thu Jan 16 11:34

Load Case is A

--LOAD INFORMATION--

---NODAL LOAD INFORMATION---

Node#	Fx lb	Fy lb	Fz lb	Mx lb-in	My lb-in	Mz lb-in
30	0.000	0.000	-9000.000	0.000	0.000	0.00
33	0.000	0.000	-9000.000	0.000	0.000	0.00
29	0.000	0.000	-9000.000	0.000	0.000	0.00
32	0.000	0.000	-9000.000	0.000	0.000	0.00
35	0.000	0.000	-9000.000	0.000	0.000	0.00
38	0.000	0.000	-9000.000	0.000	0.000	0.00
39	0.000	0.000	-9000.000	0.000	0.000	0.00
36	0.000	0.000	-9000.000	0.000	0.000	0.00

Project: CDF MOUN WALL TRANSPORTER Model: D:\INERTIA\muonw Thu Jan 16 11:34

Load Case is A

--NODAL DISPLACEMENTS--

node	delx in	dely in	delz in	rotx degrees	roty degrees	rotz degrees
6	0.000	0.000	-1.15E-001	0.000	3.88E-003	-0.000
7	0.000	0.000	-2.25E-001	0.000	3.42E-003	-0.000
8	0.000	-0.000	-2.91E-001	0.000	2.96E-003	-0.000
9	0.000	-0.000	-4.74E-001	0.000	-2.27E-008	0.000
10	0.000	-0.000	-2.91E-001	-0.000	-2.96E-003	-0.000
11	0.000	-0.000	-2.25E-001	-0.000	-3.42E-003	-0.000
29	4.22E-008	-0.000	-3.84E-001	-4.96E-003	-0.000	-0.000
30	5.29E-008	-0.000	-3.19E-001	6.26E-003	-0.000	0.000
31	0.000	0.000	0.000	7.88E-003	0.000	0.000
32	1.08E-008	-0.000	-4.41E-001	-4.70E-003	7.96E-007	-0.000
33	3.17E-008	-0.000	-3.31E-001	6.52E-003	1.60E-007	0.000
34	0.000	0.000	0.000	8.15E-003	0.000	0.000
35	4.79E-008	-0.000	-4.41E-001	-4.70E-003	-0.000	-0.000
36	6.82E-008	-0.000	-3.31E-001	6.52E-003	-0.000	0.000
37	0.000	0.000	0.000	8.15E-003	0.000	0.000
38	4.00E-008	0.000	-3.84E-001	-4.96E-003	8.10E-007	-0.000
39	6.07E-008	0.000	-3.19E-001	6.26E-003	1.74E-007	0.000
40	0.000	0.000	0.000	7.88E-003	0.000	0.000
41	0.000	0.000	0.000	-0.000	-4.02E-003	0.000
42	0.000	-0.000	-1.15E-001	-0.000	-3.88E-003	0.000
43	0.000	-0.000	-5.21E-002	-0.000	-3.99E-003	0.000
44	0.000	0.000	-5.21E-002	0.000	3.99E-003	0.000
45	0.000	0.000	0.000	0.000	4.02E-003	0.000

Project: CDF MOUN WALL TRANSPORTER Model: D:\INERTIA\muonw Thu Jan 16 11:34

Load Case is A

--Element End Forces/Stresses Information--

Node	Fa/Sig a lb psi	Fb/Sig b lb psi	Fc/Sig c lb psi	Ma/T ab lb-in psi	Mb/T bc lb-in psi	Mc/T ca lb-in psi
Element # 5						
6	1.85E-002	19085.676	-1.02E-003	0.000	1.16E-002	-5.54E+005
7	-1.85E-002	-19085.676	1.02E-003	-0.000	1.91E-002	1.13E+006
Element # 6						
7	1.85E-002	9541.763	-2.79E-004	0.000	-1.99E-002	-1.13E+006
8	-1.85E-002	-9541.763	2.79E-004	-0.000	2.56E-002	1.32E+006
Element # 7						
8	1.81E-002	-1.55E-001	-2.26E-006	0.000	-2.61E-002	-1.32E+006
9	-1.81E-002	1.55E-001	2.26E-006	-0.000	2.63E-002	1.32E+006
Element # 8						
9	1.87E-002	-1.73E-001	-7.31E-007	0.000	-2.18E-002	-1.32E+006
10	-1.87E-002	1.73E-001	7.31E-007	-0.000	2.19E-002	1.32E+006
Element # 9						
10	1.83E-002	-9541.517	1.69E-004	0.000	-2.19E-002	-1.32E+006
11	-1.83E-002	9541.517	-1.69E-004	-0.000	1.85E-002	1.13E+006
Element # 33						
11	-1.09E-003	9542.950	-5.62E-004	0.000	0.000	0.000
29	1.09E-003	-9542.950	5.62E-004	0.000	1.61E-002	2.74E+005
Element # 34						
29	-1.09E-003	542.938	-4.48E-006	1.23E-008	-1.61E-002	-2.74E+005
30	1.09E-003	-542.938	4.48E-006	-1.23E-008	1.69E-002	3.68E+005
Element # 35						
30	-1.09E-003	-8457.064	3.89E-004	1.97E-008	-1.69E-002	-3.68E+005
31	1.09E-003	8457.064	-3.89E-004	-1.97E-008	-1.33E-008	-2.91E-001
Element # 36						
10	-2.48E-004	-9542.892	-8.40E-004	0.000	0.000	0.000
32	2.48E-004	9542.892	8.40E-004	0.000	2.42E-002	-2.74E+005
Element # 37						
32	-1.15E-003	542.945	-1.07E-004	2.40E-002	9.25E-005	-2.74E+005
33	1.15E-003	-542.945	1.07E-004	-2.40E-002	1.83E-002	3.68E+005
Element # 38						
33	-1.12E-003	-8457.055	2.83E-004	2.40E-002	-1.23E-002	-3.68E+005
34	1.12E-003	8457.055	-2.83E-004	-2.40E-002	0.000	-2.99E-001
Element # 39						
8	-3.04E-005	9542.943	-4.56E-004	0.000	0.000	0.000
35	3.04E-005	-9542.943	4.56E-004	0.000	1.31E-002	2.74E+005
Element # 40						
35	-1.57E-004	542.940	-6.28E-005	-1.47E-008	-1.33E-002	-2.74E+005
36	1.57E-004	-542.940	6.28E-005	1.47E-008	2.42E-002	3.68E+005
Element # 41						
36	-8.79E-005	-8457.050	5.44E-004	-9.51E-004	-2.37E-002	-3.68E+005
37	8.79E-005	8457.050	-5.44E-004	9.51E-004	-0.000	3.34E-001
Element # 42						
7	4.06E-004	-9542.936	-3.90E-004	0.000	0.000	0.000
38	-4.06E-004	9542.936	3.90E-004	0.000	1.12E-002	-2.74E+005
Element # 43						
38	2.62E-004	542.946	-5.11E-005	2.40E-002	-1.26E-002	-2.74E+005

Project: CDF MOUN WALL TRANSPORTER Model: D:\INERTIA\muonw Thu Jan 16 11:34

Load Case is A

39	-2.62E-004	-542.946	5.11E-005	-2.40E-002	2.14E-002	3.68E+005
Element # 44						
39	3.02E-004	-8457.064	5.39E-004	2.60E-002	-2.35E-002	-3.68E+005
40	-3.02E-004	8457.064	-5.39E-004	-2.60E-002	-0.000	2.92E-001
Element # 45						
11	1.84E-002	-19084.572	-5.03E-004	0.000	-1.85E-002	-1.13E+006
42	-1.84E-002	19084.572	5.03E-004	-0.000	3.36E-002	5.53E+005
Element # 46						
42	1.77E-002	-19086.324	-3.64E-004	0.000	-3.95E-002	-5.53E+005
43	-1.77E-002	19086.324	3.64E-004	-0.000	4.53E-002	2.48E+005
Element # 47						
41	1.47E-002	-19086.029	1.66E-003	-0.000	2.88E-003	2.699
43	-1.47E-002	19086.029	-1.66E-003	0.000	-2.45E-002	-2.48E+005
Element # 48						
6	2.02E-002	19087.715	-1.16E-003	0.000	6.17E-002	5.54E+005
44	-2.02E-002	-19087.715	1.16E-003	-0.000	-4.32E-002	-2.48E+005
Element # 49						
44	2.02E-002	19086.930	-1.15E-003	0.000	1.49E-002	2.48E+005
45	-2.02E-002	-19086.930	1.15E-003	-0.000	-9.21E-008	10.742

Project: CDF MOUN WALL TRANSPORTER Model: D:\INERTIA\muonw Thu Jan 16 11:34

Load Case is A

--REACTIONS--

node	Fx lb	Fy lb	Fz lb	Mx lb-in	My lb-in	Mz lb-in
9	6.15E-004	-1.53E-006	-1.85E-002	-0.000	-2.375	4.50E-003
31	-1.93E-005	1.09E-003	8457.064	-2.91E-001	-4.02E-008	0.000
34	8.69E-005	1.12E-003	8457.055	-2.99E-001	-2.40E-002	0.000
37	-1.75E-004	8.79E-005	8457.050	3.34E-001	9.51E-004	0.000
40	-1.70E-004	-3.02E-004	8457.064	2.92E-001	-2.60E-002	-0.000
41	-1.64E-002	-8.30E-004	19086.029	0.000	-2.699	-2.88E-003
45	1.86E-002	-3.13E-004	19086.930	0.000	-10.742	2.41E-007

Project: CDF MOUN WALL TRANSPORTER Model: D:\INERTIA\muonw Thu Jan 16 11:34

Load Case is A

45	1.86E-002	-3.13E-004	19086.930	0.000	-10.742	2.41E-007

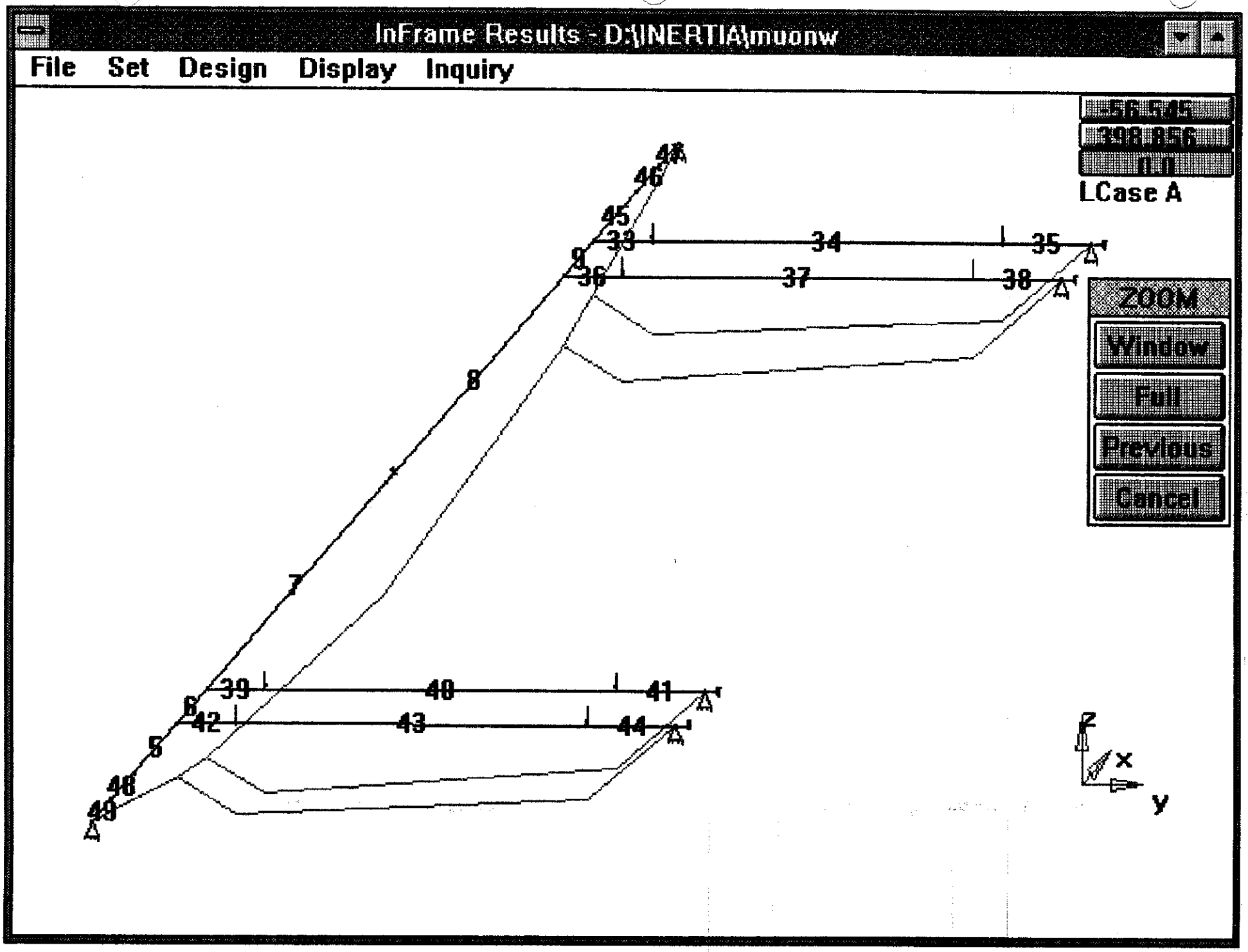
InFrame Results - D:\INERTIA\muonw
File
Set
Design
Display
Inquiry
-56.545
398.856
0.0
LCase A
ZOOM
Window
Full
Previous
Cancel
44
46
45
33
34
35
9
36
37
38
8
7
39
40
41
6
42
43
44
5
48
49
Z
X
Y

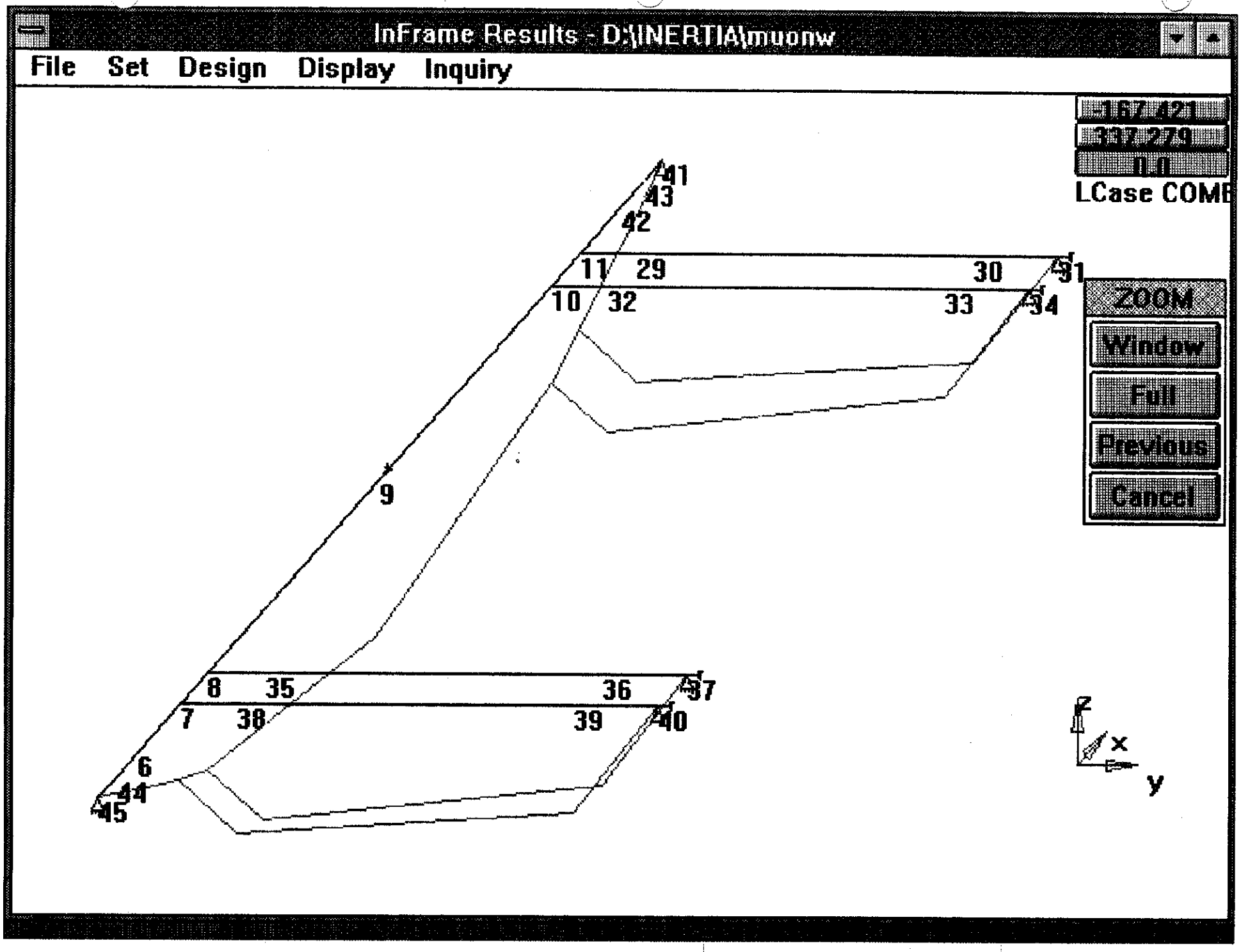
InFrame Results - D:\INERTIA\muonw
File
Set
Design
Display
Inquiry
-167.421
337.279
0.0
LCase COMB
ZOOM
Window
Full
Previous
Cancel
41
43
42
11
29
30
31
10
32
33
34
9
8
35
36
37
7
38
39
40
6
44
45
z
x
y

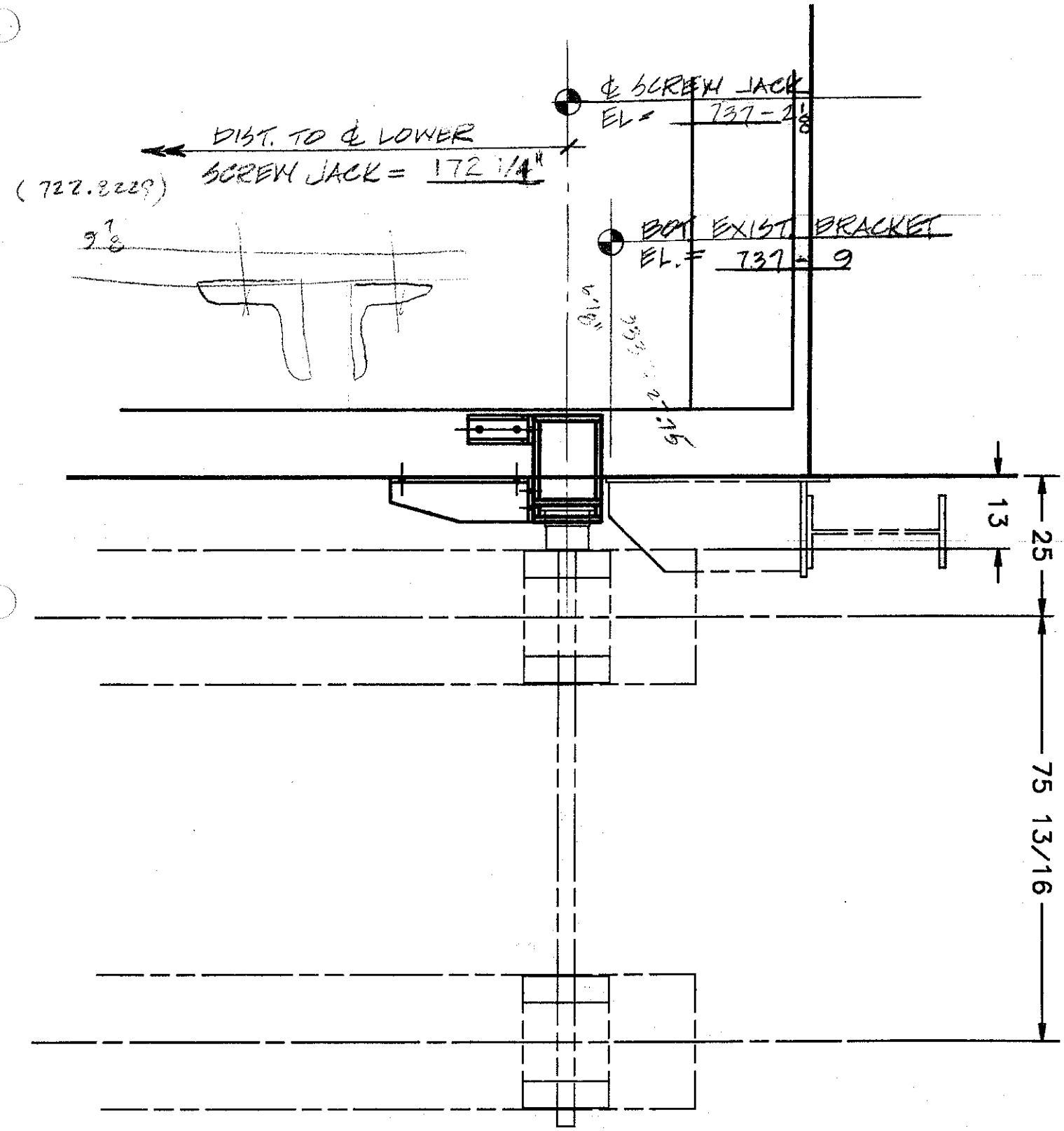
℄ SCREW JACK
EL = 737 - 2 1/8
DIST. TO ℄ LOWER
SCREW JACK = 172 1/4"
(722.8229)
9 7/8
BOT EXIST. BRACKET
EL. = 737 - 9
13
25
75 13/16

VERT. LOAD:

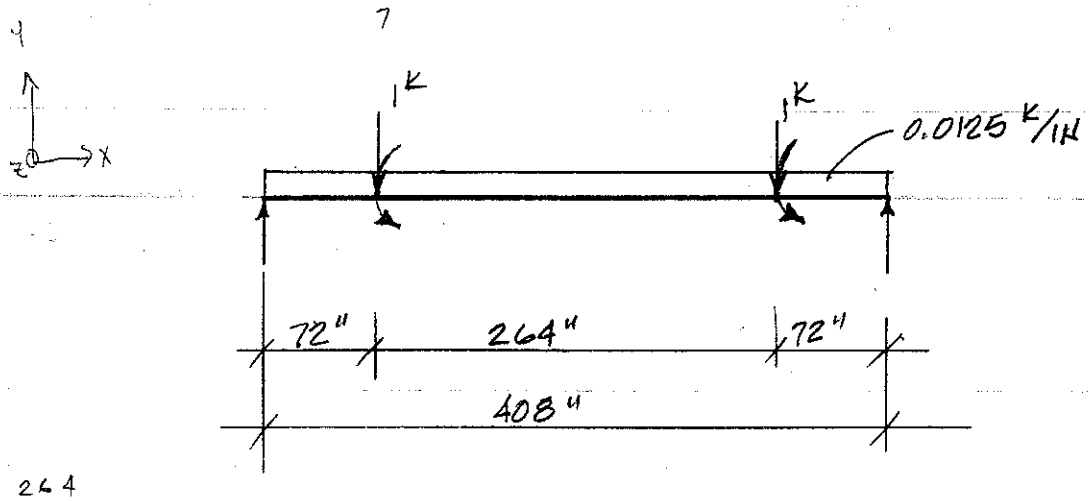

264
72
338

FRONT VIEW

HORIZ. LOAD:

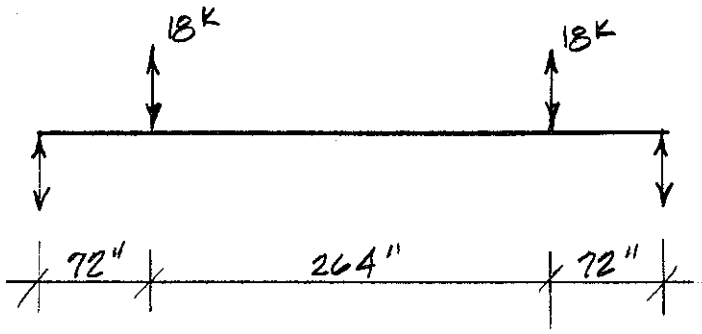

2@36" 8@33" 2@36"

TOP VIEW

TRY W 12 x 106
W 12 x 96
W 12 x 120

TS 12 x 6 x .500 11/16 T 12 x 6 x 8
12 x 8 x .500
12 x 12 x .3125

PART	A	y	Ay	Ay^2	I_o	Ay^2+I_o
1	6.25	4.6875	29.2969	137.33	0.20	137.53
2	2.73	2.1875	5.9719	13.06	4.36	17.42
	8.98		35.2688			154.95
						−138.52
					$I_x =$	16.43 IN⁴

$\bar{y} = 35.2688/8.98 = 3.9275$

$Ay^2 = 8.98(3.9275)^2$
$= 138.5176$

$S_x = I/c = 16.43/3.9275$
$= 4.18 \text{ IN}^3$

$F_b = \frac{12 \times 10^3 C_b}{ld/A_f} = \frac{12 \times 10^3 (1)}{18.5(5)/6.25} = 811 \text{ psi} > 0.6(36)$

USE $F_b = 0.6(36) = 21.6$

S_x REQ'D $= 92.25/21.6$
$= 4.27 > 4.18$ N.G.

TRY 2 CHANNELS C5X6.7

$F_b = \frac{12 \times 10^3 C_b}{ld/A_f} = \frac{12(10)^3(1)}{20.5(8.93)}$
$= 65.6$ ∴ USE $F_b = .60(36)$
$= 21.6$ KSI

S_x REQ'D $= 92.25/21.6$
$= 4.27 \text{ IN}^3 < 6.00 \text{ IN}^3$ PROVIDED (2X3.0) <u>ok</u>