E706 CRYOSYSTEM DESIGN NOTE

E706EN018

TITLE: Pressure Vessel Engineering Note (14.1)
Cryo Compressor Air Drier
RD2049; NB: S.O. UM3899/1019

AUTHOR: Danny D. Burke, ME, RD/Cryogenics Department

DATE: November 20, 1986

REVIEWED BY:

Name	Date	Project Manager	Date
R. H. Webb	1/5/87	Kelly Dixon	5 Jan 87

PRESSURE VESSEL ENGINEERING NOTE
PER MANDATORY STANDARD SD37

Prepared by: Dan Burke, ME

Preparation date: October 28, 1986

1 Description and Identification

Fill in the label information below:

This vessel conforms to engineering standard SD37

Vessel Title Cryo Compressor Air Drier

Vessel Number RD 2049; NB: UM 3899/1019

Vessel Drawing Number not available

Maximum Allowable Working Pressure (MAWP) 200 PSIG

Working Temperature Range °F 650 °F

Contents compressed air

Designer/Manufacturer Harris Equipment Corp.,

Elk Grove, Illinois

Test Pressure (if tested at Fermi) Acceptance Date:

PSI, Hydraulic Pneumatic

Accepted as conforming to standard by

of Division/Section

NOTE: Any subsequent changes in contents, pressures, temperatures, valving, etc., which affect the safety of this vessel shall require another review and test.

Obtain from Division/Section Safety Officer

Actual signature required in this space

Reviewed by: Robt H Wands Date: 1/5/87

Director's signature (or designee) if the vessel is for manned areas but doesn't conform to the requirements of the standard.

Date:

Lab Property Number(s): NAL 56138

Lab Location Code: MES MWA (obtain from Safety Officer)

Purpose of Vessel(s): To provide dry compressed air for pneumatic controls in support of L.A.C.-E706 Cryogenic Systems

Vessel Capacity/Size: 8 gallons Diameter: 8 in. Length: 37 in.

Normal Operating Pressure (OP) 75 PSIG

MAWP-OP = 125 PSI_D

Is the above enough to provide relief cracking pressure tolerance plus system uncertainty tolerance per M-9. Yes

As an option, provide a photo of the entire vessel in the Appendix.

5031TA-5
6/86

List the numbers of all pertinent drawings and the location of the originals. (Append copies).

Drawing #	Location of Original
C-125 (See Appendix B)	Air Drying Systems, Inc.
C-126 (See Appendix A)	Air Drying Systems, Inc.

2 Design Verification

Does the vessel(s) have a U stamp? Yes X No _____. If "Yes", fill out data below and skip page 3; if "No", fill out page 3 and skip this page.

Staple photo of U stamp plate below.

Copy "U" label details to the side if photo is not clear of if copies are unreadable.

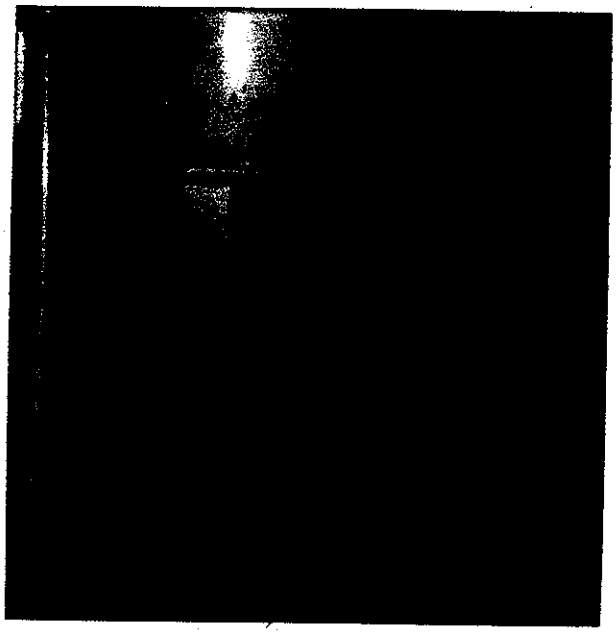

Copy data here:

NB: S.O. No. 3899/1019

Sh. WP. 200 PSIG 650°F

Year 1986

HEC Harris Equipment Corp.,

Elk Grove, Illinois 60007

On the sketch below, circle all applicable sections of the ASME code per Section VIII, Division I. List the results of all calculations. (Insert copies of calculations in the appendix).

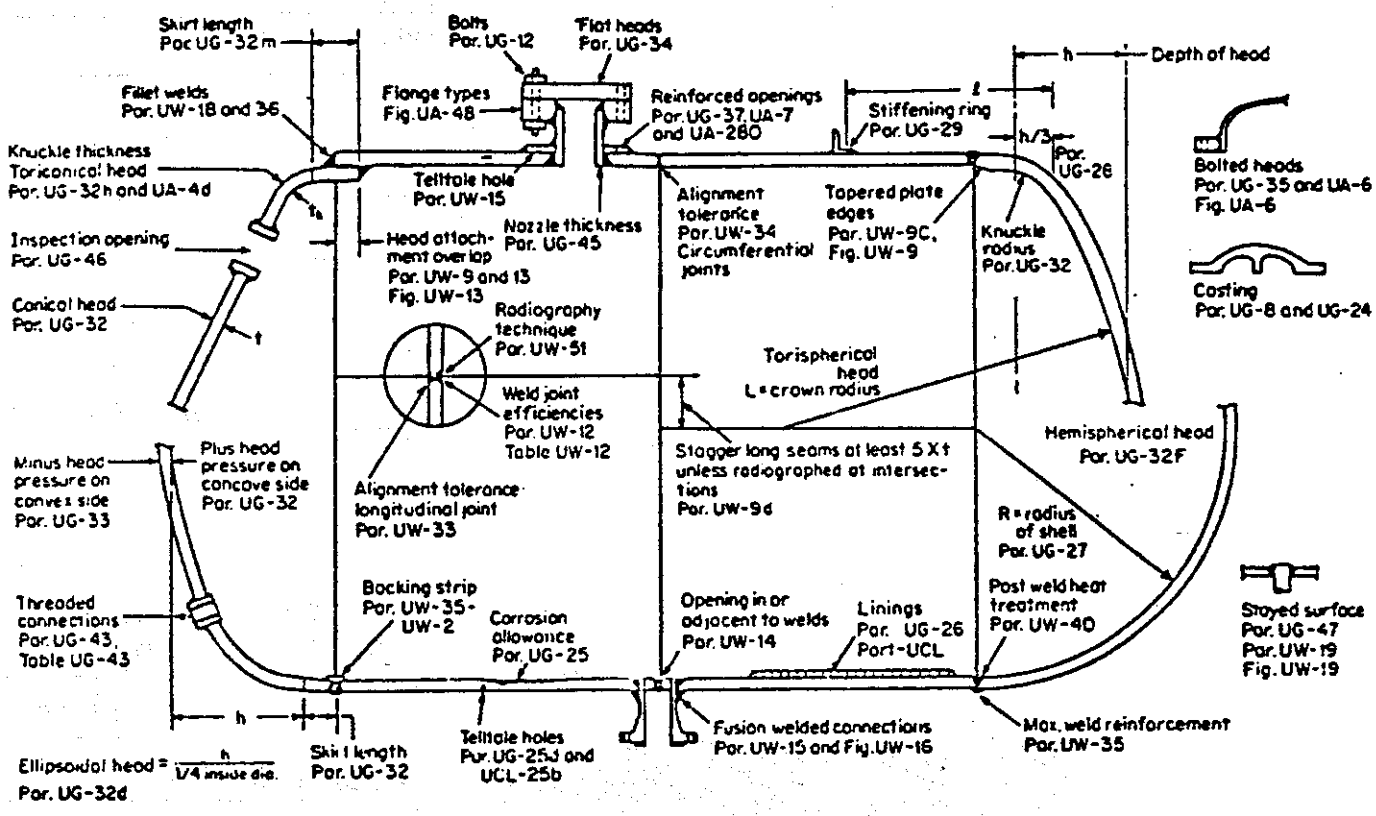

Summary of ASME Code

Item	Reference ASME Code Section	CALCULATION RESULT (Required thickness or stress level vs. actual thickness or calculated stress level)
		vs.
		vs.
		vs.
		vs.
		vs.

If this vessel is exceptional or had exceptional parts, list their details under 5.6. Yes_____ No X

5031TA-7
6/86

3 System Venting. Provide the system schematic in the Appendix, if the vessel safety is system sensitive.

Is it possible to isolate the relief valves by a valve from the vessel?

Yes_____ No X

If "Yes", the system must conform to M-5. Provide an explanation on the appended schematic. (An isolatable vessel, not conforming to M-5 violates the Standard.)

Is the relief cracking pressure set at or below the M.A.W.P.?

Yes X No_____ Actual setting 150 PSIG
(A no response violates the Standard.)

Is the pressure drop of the relief system at maximum anticipated flow such that vessel pressure never rises above the following? (UG 125)

Yes X No_____

110% of MAWP (one relief)
116% of MAWP (multiple reliefs)
121% of MAWP (unexpected heat source)

Provide test or calculational proof in the Appendix.
(Non-conforming pressure rises violate the Standard.)

List of reliefs and settings:

Manufacturer	Relief SV	Setting	Flow Rate	Size
Kingston Co., L.A.	FIG-112C	150 PSIG	92 SCFM	1/4

Is the relief device an ASME stamped device? Yes X No _____

4 Operating Procedure

Is an operating procedure necessary for the safe operation of this vessel?

Yes____ No X . If "Yes", please append.

5 Welding Information

Has the vessel been fabricated in a Fermilab shop? Yes_____ No X

If "Yes", append a copy of the welding shop statement of welder qualification and a copy of the Welding Procedure Specification (WPS) used to weld this vessel.

6 Exceptional, Existing, Used, and Non-Manned Area Vessels

Is this vessel or any part thereof in the above categories? Yes_____ No X

If "Yes", follow the Engineering Note requirements for documentation in free form below.

1 Background

This ADS Model E-75, Serial No. A-1354 Dryer System, as shown in Appendix A and B, is to be used to provide dry, compressed air to the Liquid Argon Calorimeter (LAC-E706) pneumatic controls. It is supplied compressed air by an Ingersoll-Rand Corp., Model 79T2-100, Compressor. The dryer system is located in the MW Detector Hall south of the LAC vessel.

Information stamped on the body of the ASME certified valve (U-stamped) is as follows:

FIG-K-112C
KINGSTON CO. L.A.
FIG.-112C SIZE 1/4 N.B. UV
SET 150PSIG 92SCFM

This relief valve cannot be isolated, and is installed such that no discharge can hit people, or equipment, and cannot be plugged or otherwise reduced in capacity.

2 Summary

Required Capacity/ Area	Capacity/Area Available
CGA S1.3-1980 $Q_S \geq 1.94 SCFM$	92SCFM
API RP-520 Fire Exposure $A \geq 0.024 sqin.$	0.049 sqin.

3 Requirements of CGA S1.3-1980

According to CGA S1.3-1980, Para. 5.3.2, the applicable equation for the minimum required flow capacity is:

$$Q_S = 0.029W_e\,,$$

where Q_S = Flow capacity in cubic feet per minute of free air ,

W_e = Water capacity of the container in pounds .

The very conservative volume of the container, 40″ tall by 6-5/8″ in. diameter is:

$$V = \text{Area cross section} \times \text{length} \times 7.42gal/ft^3$$

$$V = (\pi/4(8/12)^2)(37/12)(7.42),$$

$$V \cong 8GAL,$$

$$W_e = 8GAL \times 8.36lb/GAL\ H_20,$$

$$W_e = 66.9lb, \text{water capacity.}$$

The minimum required flow capacity is:

$$Q_S = 0.029(66.9),$$

$$Q_S = 1.94SCFM, Air \text{ minimum capacity.}$$

The capacity available is:

$$Q = 92SCFM, Air, \text{ capacity available.}$$

Since $Q > Q_S$, the vessel is adequately relieved.

4 Exposure to an External Fire

Requirements of *API Recommended Practice 520*, Fourth Edition, December 1976, for sizing for gas expansion due to an external fire, Sec. C.3, Page 39, are that the minimum effective discharge area should be:

$$A = \frac{F' A_3}{\sqrt{P_1}},$$

where

A = effective discharge area of the valve in sqin.,

F' = factor from API RP-520, Fig. C-3, Page 41, use $F' = 0.045$ if not known,

A_3 = exposed surface area of the vessel in sqft.,

P_1 = set pressure plus the allowable overpressure (1.10 P_{set}) plus atmospheric pressure (PSIA).

For this vessel:

$$F' = 0.045,$$

$$A_3 = 7.16 sqft,$$

$$P_1 = 150(1.10) + 14.696 PSIA,$$

$$P_1 = 179.7 PSIA.$$

$$A = 0.045(7.16)/(179.7)^{1/2},$$

$A = 0.024 sqin$ minimum effective value discharge area.

The effective area of the valve used is 0.049sqin. Since

$$0.049 > 0.024 ,$$

the vessel is adequately relieved.

APPENDIX A

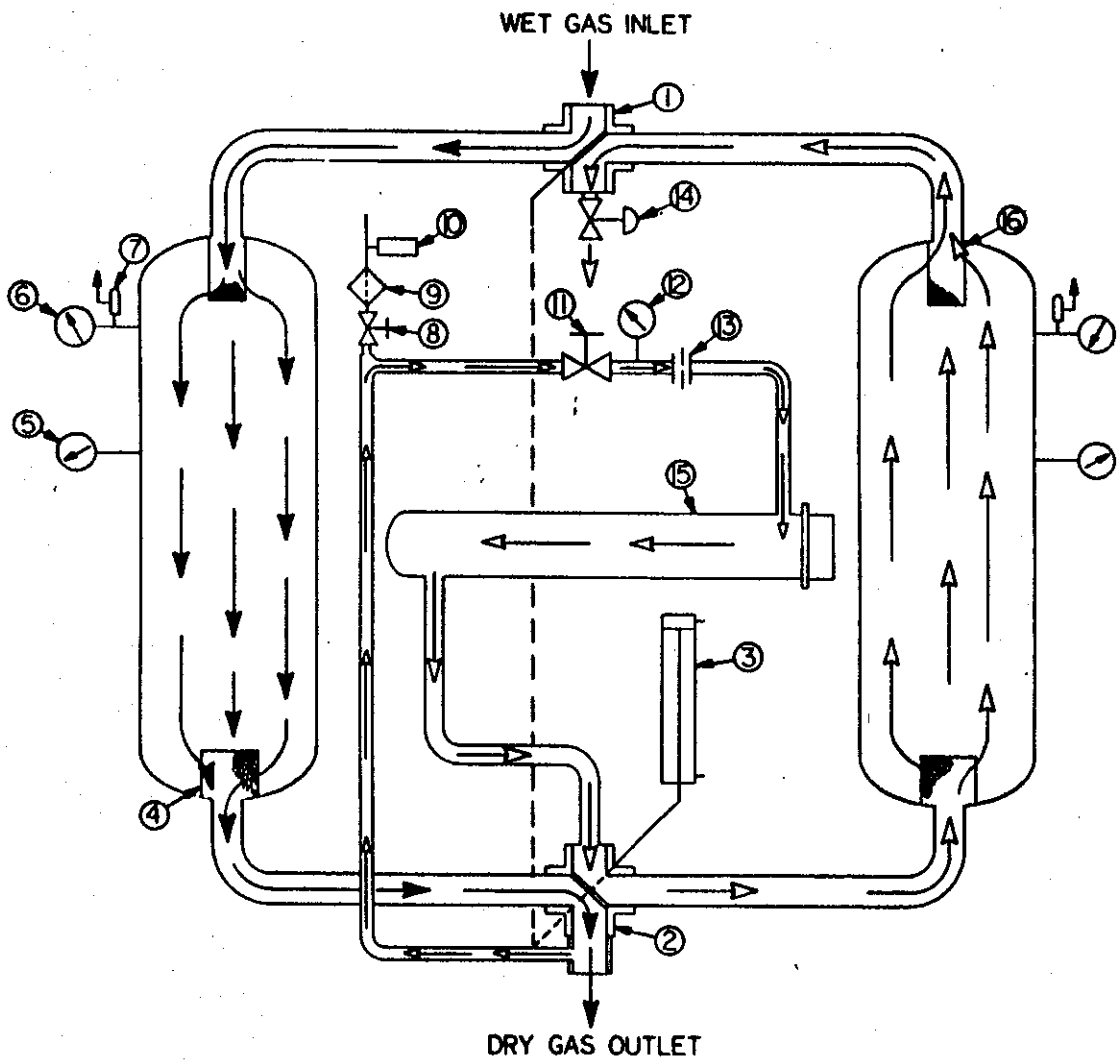

LEGEND

DRYING FLOW

REGENERATING FLOW

1 FOUR WAY INLET SWITCHING VALVE
2 FOUR WAY OUTLET SWITCHING VALVE
3 FOUR WAY VALVE OPERATING CYLINDER
4 SS DESICCANT SUPPORT
5 TOWER TEMPERATURE GAGE
6 TOWER PRESSURE GAGE
7 TOWER RELIEF VALVE
8 PILOT AIR SHUT OFF VALVE
9 PILOT AIR FILTER
10 MOISTURE INDICATOR (OPTIONAL)
11 PURGE FLOW ADJUSTING VALVE
12 PURGE METER
13 PURGE ORIFICE
14 PURGE VALVE
15 HEATER
16 REMOVABLE SS INLET SCREEN

AIR DRYING SYSTEMS INC

SCALE: NONE

DATE: 1-20-71

FLOW DIAGRAM 'E' SERIES

C-126

APPENDIX B

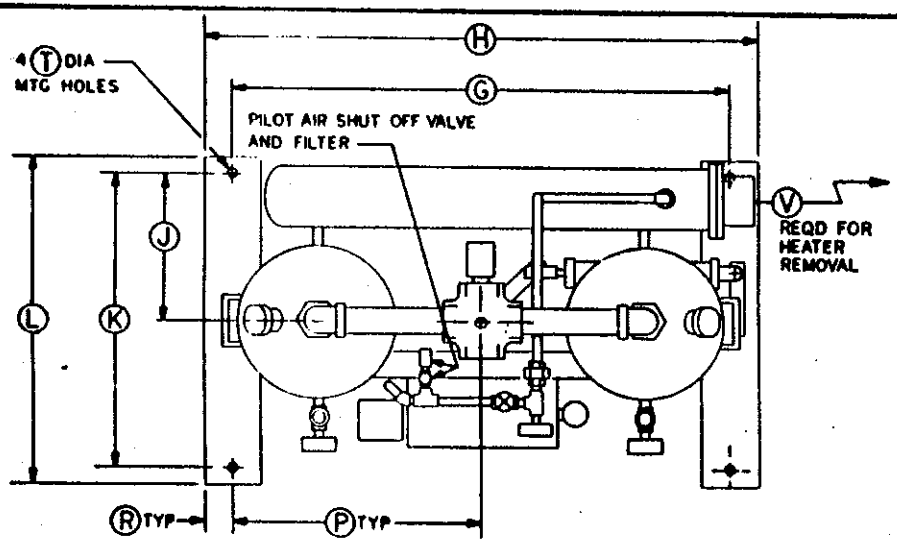

MODEL NO	DIMENSIONS IN INCHES																		NET WEIGHT LBS
	A	B	C	D	E	F	G	H	J	K	L	M	N	P	R	S	T	V	
E 35	3/4	6 1/4	44 1/2	1 3/4	3/4	3/4	27 1/2	30	5	10	12	4	1 15/16	13 3/8	1 1/4	5/8	5/8	16	285
E 50	3/4	6 1/4	50 1/2	1 3/4	3/4	3/4	27 1/2	30	5	10	12	4	1 15/16	13 3/4	1 1/4	5/8	5/8	20	320
E 75	1	6	47 1/2	2 1/8	1	1	37	40	8	16	18	6	2 3/8	18 1/2	1 1/2	1 1/2	5/8	28	485
E 100	1	6	57 1/2	2 1/8	1	1	37	40	8	16	18	6	2 3/8	18 1/2	1 1/2	1 1/2	5/8	28	570
E 150	1 1/2	6	57	2 5/8	1 1/2	1 1/2	38	42	10 1/2	21	24	6 7/8	2 7/8	19	2	1 5/8	5/8	26 1/4	685
E 200	1 1/2	6	65	2 5/8	1 1/2	1 1/2	38	42	10 1/2	21	24	6 7/8	2 7/8	19	2	1 5/8	5/8	33	810
E 250	2	8	60 1/2	3 1/8	1 1/2	1 1/2	51	56	13 1/2	27	30	8 3/4	3 1/2	25 1/2	2 1/2	1 7/8	3/4	37 1/2	1050
E 300	2	8	68 1/2	3 1/8	1 1/2	1 1/2	51	56	13 1/2	27	30	8 3/4	3 1/2	25 1/2	2 1/2	1 7/8	3/4	43 1/4	1300
E 350	2	8	76 1/2	3 1/8	1 1/2	1 1/2	51	56	13 1/2	27	30	8 3/4	3 1/2	25 1/2	2 1/2	1 7/8	3/4	46	1485
E 400	2	8	67 3/8	3 1/8	2	2	51	56	14 1/2	29	32	8 3/4	3 1/2	25 1/2	2 1/2	1 7/8	3/4	46	1675

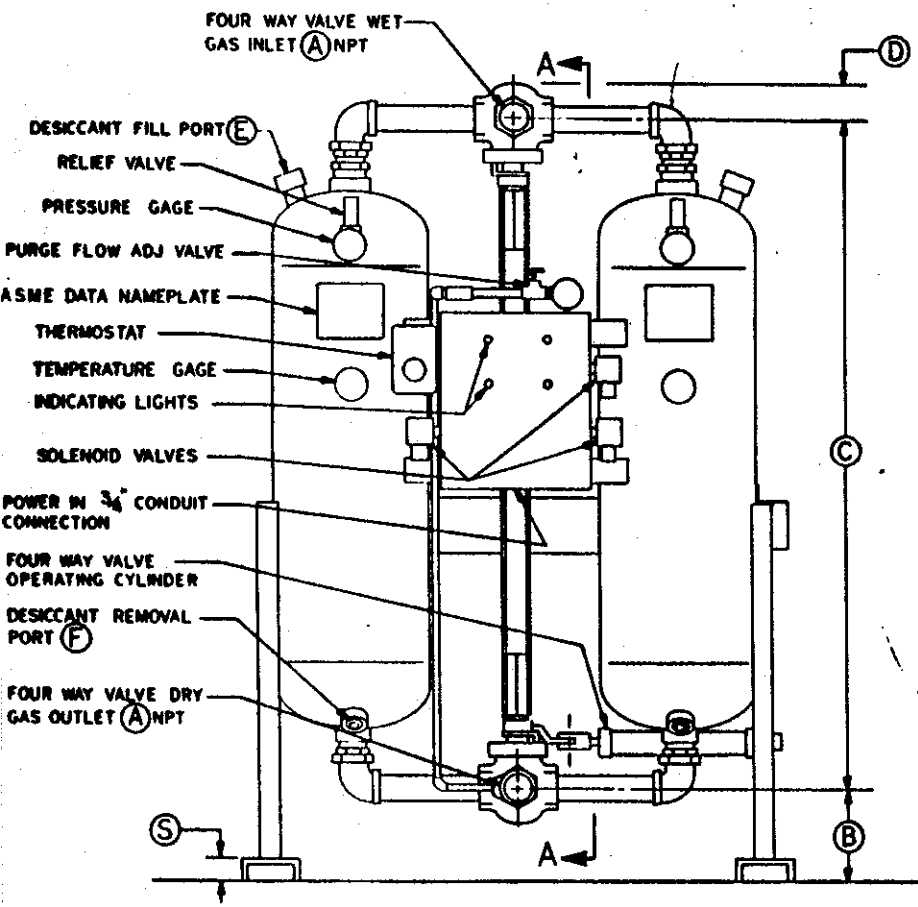

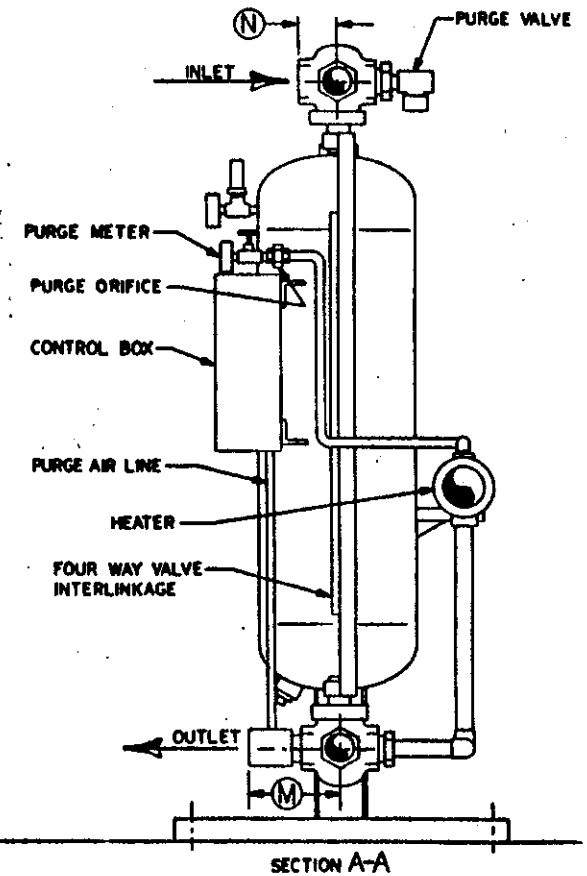

SECTION A-A

NOTES

1 ALL WELDING AND MATERIAL SPECS CONFORM TO LATEST EDITION OF ASME SECTION VIII AND TOWERS ARE 'U' STAMPED

2 ALL ELECTRICAL CONFORMS TO NATL ELECTRICAL CODE

3 INSULATION STD ON HEATER SHELL AND PURGE PIPING – TOWER INSULATION OPTIONAL

AIR DRYING SYSTEMS INC

SCALE: NONE | APPROVED BY: | DRAWN BY: L. B.

DATE: 1-12-71 | REVISED

DIMENSIONS E 35 THRU E 400

DRAWING NUMBER C-125

ADDENDUM TO E706EN018

PRESSURE VESSEL ENGINEERING NOTE (14.1)

CRYO COMPRESSOR AIR DRIER

RD 2049, NB: S.O. UM 3899/1019

This Addendum is to be attached to the subject note, to provide additional information as follows:

Type 30, Mod. 71T2-10D

Ingersoll-Rand compressor

10 HP, total capacity: 40 SCFM @ 100 PSIG

As can be seen by the attached circuit diagram, if both compressors were at total capacity, the drier, relieving at 150 PSIG @ 92 SCFM, air, is adequately protected; *i.e.*, $100PSIG < 150PSIG$, and $80SCFM, air < 92SCFM, air$.

21 JAN 87

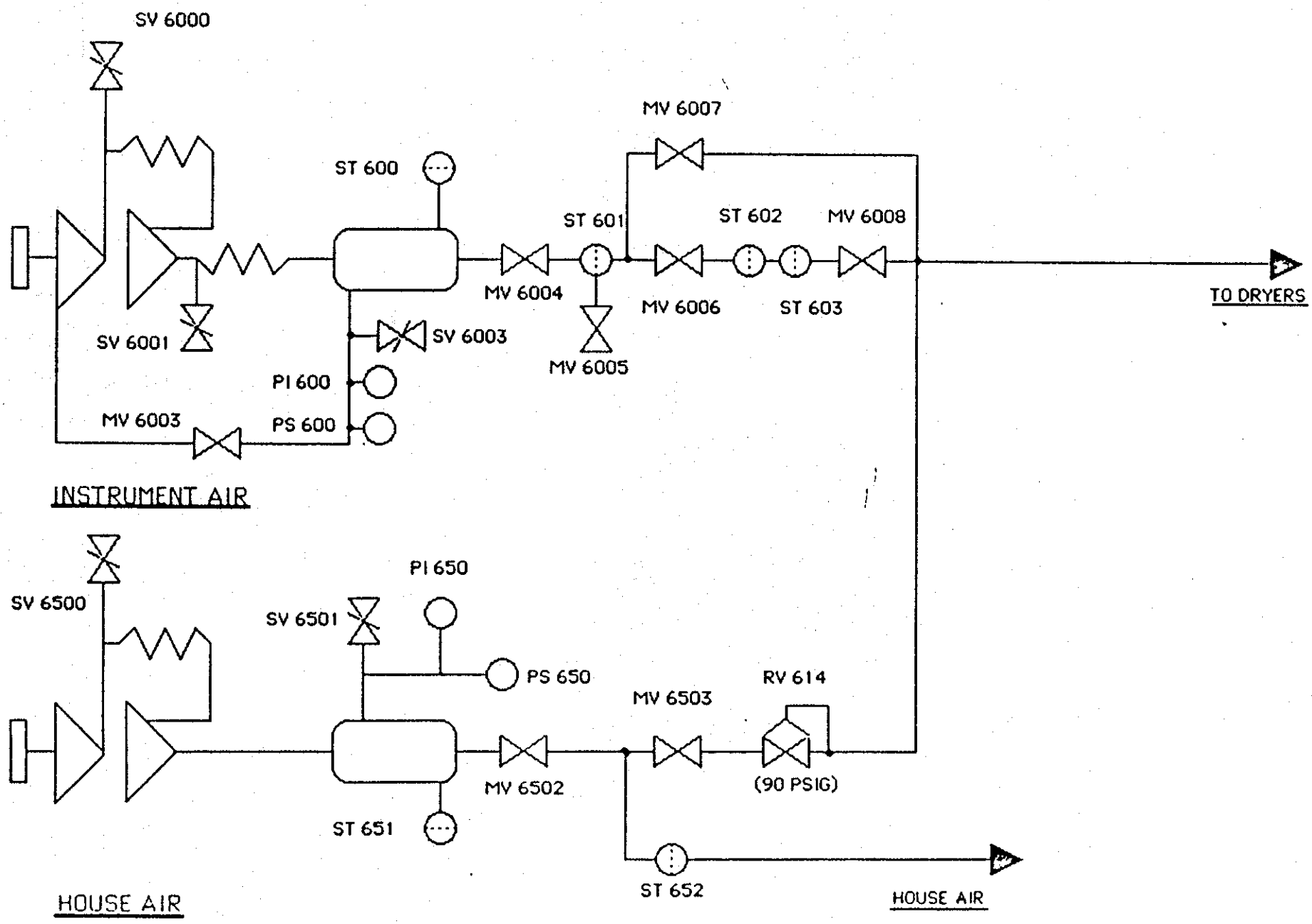
SV 6000
MV 6007
ST 600
ST 601
ST 602
MV 6008
MV 6004
MV 6006
ST 603
TO DRYERS
SV 6001
SV 6003
MV 6005
PI 600
MV 6003
PS 600
INSTRUMENT AIR
SV 6500
PI 650
SV 6501
PS 650
RV 614
MV 6503
MV 6502
(90 PSIG)
ST 651
ST 652
HOUSE AIR
HOUSE AIR