Fermilab

E706 CRYOSYSTEM DESIGN NOTE

E706EN015

TITLE: LN_2 Argon Recondensers (14.1)

Cooldown: RD2046-NB3770

Operating: RD2047-NB3771

AUTHOR: Danny E. Burke, ME

DATE: May 26, 1987

REVIEWED BY:

Name	Date	Project Manager	Date

PRESSURE VESSEL ENGINEERING NOTE
PER MANDATORY STANDARD SD37

Prepared by: DAN BURKE, ASME
Preparation date: 10 JN 1987
REV. 7-6-87

1 Description and Identification

Fill in the label information below:

This vessel conforms to engineering standard SD37

Vessel Title LN2 Recondensers

Vessel Number Operating: N82771 - R02047 ← Obtain from Division/Section Safety Officer

Vessel Drawing Number CCI Drawings attached 7414E

Maximum Allowable Working Pressure (MAWP) 50 PSIG/FV

Working Temperature Range +100 °F −325 °F

Contents LN2

Designer/Manufacturer / Chicago Bridge and Iron (CBI)

Test Pressure (if tested at Fermi) Acceptance Date:

PSI, Hydraulic Pneumatic

Accepted as conforming to standard by R.C. Stuffel ← Actual signature required in this space

of Division/Section Research

NOTE: Any subsequent changes in contents, pressures, temperatures, valving, etc., which affect the safety of this vessel shall require another review and test.

Reviewed by: [signature] Date: JULY 8, 87

Director's signature (or designee) if the vessel is for manned areas but doesn't conform to the requirements of the standard.

Date:

Lab Property Number(s): NOT AVAILABLE

Lab Location Code: MES MW A (obtain from Safety Officer)

Purpose of Vessel(s): For Coldown and pressure maintenance of the Liquid Argon Calorimeter (LAC)

Vessel Capacity/Size: 14 inches Diameter, 67 in Length, 20 gal

Normal Operating Pressure (OP) 20±35 PSIG

MAWP-OP = 30±15 PSID

Is the above enough to provide relief cracking pressure tolerance plus system uncertainty tolerance per M-9. yes

As an option, provide a photo of the entire vessel in the Appendix.

5031TA-5
6/86

List the numbers of all pertinent drawings and the location of the originals. (Append copies).

Drawing #	Location of Original
CCI Assem (attached):	Oak Brook, IL
Operating 7414-E	"
~~Condition 7481-E~~	"
~~RD/CRYO 2220.1-MD-183298,~~ ~~TEE SECTION, CONDITION~~ RD/CRYO 22201-MD-183273, TEE SECTION, OPERATING	Research Division/Cryogenics
RD/CRYO 2220.1-MD-183303 A&B, Vent and Relief Views AA & BB	Dept., Fermilab

2 Design Verification

Does the vessel(s) have a U stamp? Yes X No _____. If "Yes", fill out data below and skip page 3; if "No", fill out page 3 and skip this page.

Staple photo of U stamp plate below.

Copy "U" label details to the side if photo is not clear of if copies are unreadable.

Copy data here:

Due to construction requirements the tags are physically impossible to read.

NAT. BD # ~~3770~~ 3771

MAWP 50 PSIG/FV @ 100 F

MIN. TEMP -325 F

MFR WELDON, INC.

On the sketch below, circle all applicable sections of the ASME code per Section VIII, Division I. List the results of all calculations. (Insert copies of calculations in the appendix).

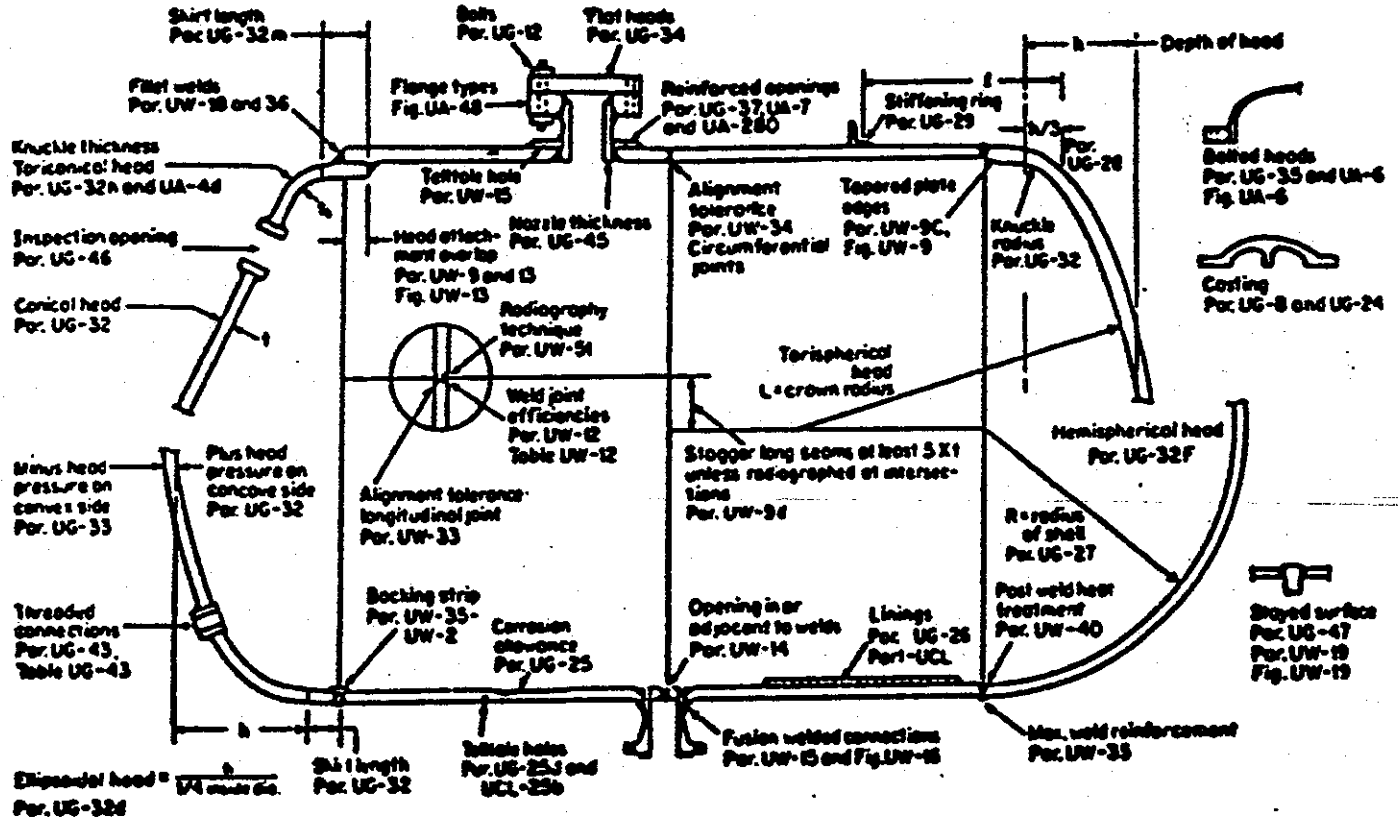

Summary of ASME Code

Item	Reference ASME Code Section	CALCULATION RESULT (Required thickness or stress level vs. actual thickness or calculated stress level)
		vs.
		vs.
		vs.
		vs.
		vs.

If this vessel is exceptional or had exceptional parts, list their details under 5.6. Yes_____ No X

3 System Venting. Provide the system schematic in the Appendix, if the vessel safety is system sensitive.

Is it possible to isolate the relief valves by a valve from the vessel?

Yes_____ No X

If "Yes", the system must conform to M-5. Provide an explanation on the appended schematic. (An isolatable vessel, not conforming to M-5 violates the Standard.)

Is the relief cracking pressure set at or below the M.A.W.P.?

Yes X No_____ Actual setting 480 PSIG
(A no response violates the Standard.)

Is the pressure drop of the relief system at maximum anticipated flow such that vessel pressure never rises above the following? (UG 125)

Yes X No_____ → 110% of MAWP (one relief)
116% of MAWP (multiple reliefs)
121% of MAWP (unexpected heat source)

Provide test or calculational proof in the Appendix.
(Non-conforming pressure rises violate the Standard.)

List of reliefs and settings:

Manufacturer	Relief	Setting	Flow Rate	Size
~~Cool Dewight~~ ~~AGCO~~		~~48 PSIG~~	~~408 Scfm Air~~	~~1½x2~~
OPERATING: AGCO		48 PSIG	198 Scfm Air	1 x 1

Is the relief device an ASME stamped device? Yes X No _____

4 Operating Procedure

Is an operating procedure necessary for the safe operation of this vessel?

Yes____ No X. If "Yes", please append.

5 Welding Information

Has the vessel been fabricated in a Fermilab shop? Yes_____ No X

If "Yes", append a copy of the welding shop statement of welder qualification and a copy of the Welding Procedure Specification (WPS) used to weld this vessel.

6 Exceptional, Existing, Used, and Non-Manned Area Vessels

Is this vessel or any part thereof in the above categories? Yes____ No X

If "Yes", follow the Engineering Note requirements for documentation in free form below.

PRESSURE VESSEL ENGINEERING NOTE
PER MANDATORY STANDARD SD37

Prepared by: DAN BURKE, ASME
Preparation date: 10 JN 1987
REV. 7-6-87

1 Description and Identification

Fill in the label information below:

This vessel conforms to engineering standard SD37

Vessel Title LN2 Recondensers

Vessel Number Cooldown: N83770-RD2046 ← Obtain from Division/Section Safety Officer

Vessel Drawing Number CCI Drawings attached 7483-E

Maximum Allowable Working Pressure (MAWP) 50 PSIG/FV

Working Temperature Range +100 °F −325 °F

Contents LN2

Designer/Manufacturer / Chicago Bridge and Iron (CBI)

Test Pressure (if tested at Fermi) Acceptance Date:

PSI, Hydraulic Pneumatic

Accepted as conforming to standard by K. C. Stanfield ← Actual signature required in this space

of Division/Section Research

NOTE: Any subsequent changes in contents, pressures, temperatures, valving, etc., which affect the safety of this vessel shall require another review and test.

Reviewed by: Andrew Fyulkenshy Date: JULY 8. 87

Director's signature (or designee) if the vessel is for manned areas but doesn't conform to the requirements of the standard.

Date:

Lab Property Number(s): NOT AVAILABLE

Lab Location Code: MES MW A (obtain from Safety Officer)

Purpose of Vessel(s): For Cooldown and pressure maintenance of the Liquid Argon Calorimeter (LAC)

Vessel Capacity/Size: 14 inches Diameter, 67 in Length, 20 gal

Normal Operating Pressure (OP) 20 to 35 PSIG

MAWP-OP = 30 to 15 PSID

Is the above enough to provide relief cracking pressure tolerance plus system uncertainty tolerance per M-9. yes

As an option, provide a photo of the entire vessel in the Appendix.

5031TA-5
6/86

List the numbers of all pertinent drawings and the location of the originals. (Append copies).

Drawing #	Location of Original
CCI Assem (attached):	Oak Brook, IL
~~Operating 7444-E~~	"
Cooldown 7483-E	"
RD/CRYO 2220.1-MD-183272, TEE SECTION, COOLDOWN	Research Division/Cryogenics Dept., Fermilab
~~RD/CRYO 2220.1-MD-183273, TEE SECTION, OPERATING~~	
RD/CRYO 2220.1-MD-183303 A&B, Vent and Relief Views AA & BB	

2 Design Verification

Does the vessel(s) have a U stamp? Yes X No _____. If "Yes", fill out data below and skip page 3; if "No", fill out page 3 and skip this page.

Staple photo of U stamp plate below.

Copy "U" label details to the side if photo is not clear of if copies are unreadable.

Copy data here:

Due to construction requirements the tags are physically impossible to read.

NAT. BOARD # 377D

MAWP 50 PSIG/F.V. @ 100F

MIN. TEMP -325 F

MFR. WELDON, INC.

On the sketch below, circle all applicable sections of the ASME code per Section VIII, Division I. List the results of all calculations. (Insert copies of calculations in the appendix).

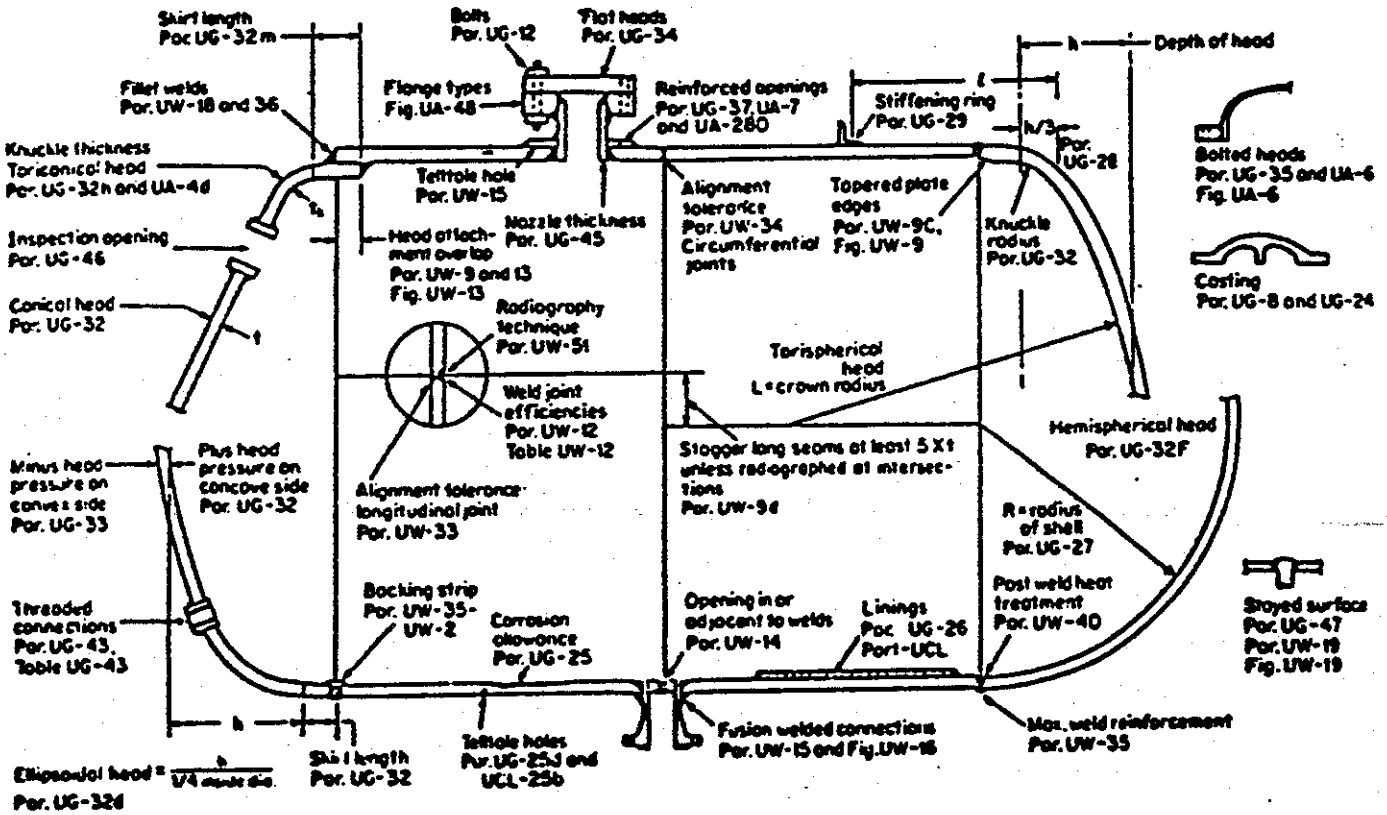

Summary of ASME Code

Item	Reference ASME Code Section	CALCULATION RESULT (Required thickness or stress level vs. actual thickness or calculated stress level)
		vs.
		vs.
		vs.
		vs.
		vs.

If this vessel is exceptional or had exceptional parts, list their details under 5.6. Yes____ No X

5031TA-7
6/86

3 System Venting. Provide the system schematic in the Appendix, if the vessel safety is system sensitive.

Is it possible to isolate the relief valves by a valve from the vessel?

Yes_____ No X

If "Yes", the system must conform to M-5. Provide an explanation on the appended schematic. (An isolatable vessel, not conforming to M-5 violates the Standard.)

Is the relief cracking pressure set at or below the M.A.W.P.?

Yes X No_____ Actual setting 480 PSIG
(A no response violates the Standard.)

Is the pressure drop of the relief system at maximum anticipated flow such that vessel pressure never rises above the following? (UG 125)

Yes X No_____ → 110% of MAWP (one relief)
116% of MAWP (multiple reliefs)
121% of MAWP (unexpected heat source)

Provide test or calculational proof in the Appendix.
(Non-conforming pressure rises violate the Standard.)

List of reliefs and settings:

Manufacturer	Relief	Setting	Flow Rate	Size
COOL DOWN: AGCO		48 PSIG	508 Scfm Air	1½x2
~~OPERATING: AGCO~~		~~48 PSIG~~	~~188 Scfm Air~~	~~1x1~~

Is the relief device an ASME stamped device? Yes X No_____

4 Operating Procedure

Is an operating procedure necessary for the safe operation of this vessel?

Yes____ No X. If "Yes", please append.

5 Welding Information

Has the vessel been fabricated in a Fermilab shop? Yes_____ No X

If "Yes", append a copy of the welding shop statement of welder qualification and a copy of the Welding Procedure Specification (WPS) used to weld this vessel.

6 Exceptional, Existing, Used, and Non-Manned Area Vessels

Is this vessel or any part thereof in the above categories? Yes____ No X

If "Yes", follow the Engineering Note requirements for documentation in free form below.

ASME MANUFACTURER'S DATA REPORT FOR PRESSURE VESSELS
(Alternate Form for Single Chamber, Completely Shop Fabricated Vessels Only)
As Required by the Provisions of the ASME Code Rules, Section VIII, Division 1

1 Manufactured and certified by Weldon, Inc., 51 Terminal Ave., Clark, New Jersey 07066

2 Manufactured for Cryolab, Inc., P.O. Box 485, Kenilworth, N.J. 07033

3 Location of installation University of Rochester, Rochester, N.Y.

4 Type Vert. Tank | 3381-142 | --- | 7414-E/7483-E | 3770/3771 | 1985

5 The chemical and physical properties of all parts meet the requirements of material specifications of the ASME BOILER AND PRESSURE VESSEL CODE. The design, construction, and workmanship conform to ASME Rules, Section VIII, Division 1. 1983

to 12/31/84

6 Shell SA-312-304 | .150" | 0 | 1'-0-3/8" | 3'-3"

7 Seams Butt-Dbl.Weld | None | 70 | None | | None | | 1

8 Heads (a) Well SA-240-304 (b) Well SA-240-304

	Location of the Seam Joint	Minimum Thickness	Corrosion Allowance	Crown Radius	Knuckle Radius	Elliptical Ratio	Conical Apex Angle	Non-circular Radius	Flat Diameter	Straight Flange (Minimum Length)
a	Top	5/8"	0	Flat					12-3/4"	Flat
b	Bottom	5/8"	0	Flat					12-3/4"	Flat

If removable, bolts used (describe other fastenings) Singl. Fillet Weld

MAWP 50/FV Relief valve setting 100

Min. temp. (when less than -20°F) -335 °F. Hydro XXXXX XXXX test pressure 75

10 Nozzles, inspection and safety valve openings

Purpose (Inlet, Outlet, Drain, etc.)	No.	Diameter or Size	Type	Material	Nominal Thickness	Reinforcement Material	Attached	Location
In & Out	2	1/2"	ButtWeld	SA-312-304	.109"	None	Welded	Head
In & Out	2	1"	ButtWeld	SA-213-304L	.120"	None	Welded	Head
In & Out	2	3/15"	ButtWeld	SA-249-304	.049	SA-240-304	Welded	Head
SAFETY VALVES BY OTHERS.								

11 Supports: Skirt No Legs Lugs Legs Saddles Other None Attached

12 Remarks. Manufacturer's Partial Data Reports properly identified and signed by commissioned inspectors have been furnished for the following items of the report: None

(2) Vessels are Argon Recondensers for non-lethal service.
Customer P.O. No. 9059.

CERTIFICATE OF SHOP COMPLIANCE

We certify that the statements made in this report are correct and that all details of design, material, construction, and workmanship of this vessel conform to the ASME Code for Pressure Vessels, Section VIII, Division 1. "U" Certificate of Authorization No. 11,621 expires Aug. 10, 1987

Date 6/7/85 Co. name Weldon, Inc. Signed [signature]

CERTIFICATE OF SHOP INSPECTION

Vessel constructed by Weldon, Inc. at 51 Terminal Ave., Clark, New Jersey

I, the undersigned, holding a valid commission issued by the National Board of Boiler and Pressure Vessel Inspectors and/or the State or Province of New Jersey and employed by N.J. Dept. of Labor of Trenton

have inspected the component described in this Manufacturer's Data Report on 6/7, 19 85, and state that, to the best of my knowledge and belief, this Manufacturer has constructed this pressure vessel in accordance with ASME Code, Section VIII, Division 1. By signing this certificate neither the inspector nor his employer makes any warranty, expressed or implied, concerning the pressure vessel described in this Manufacturer's Data Report. Furthermore, neither the inspector nor his employer shall be liable in any manner for any personal injury or property damage or a loss of any kind arising from or connected with this inspection.

Date 6-7-85 Signed [signature] Commissions NB7135-NJ521

1 Background

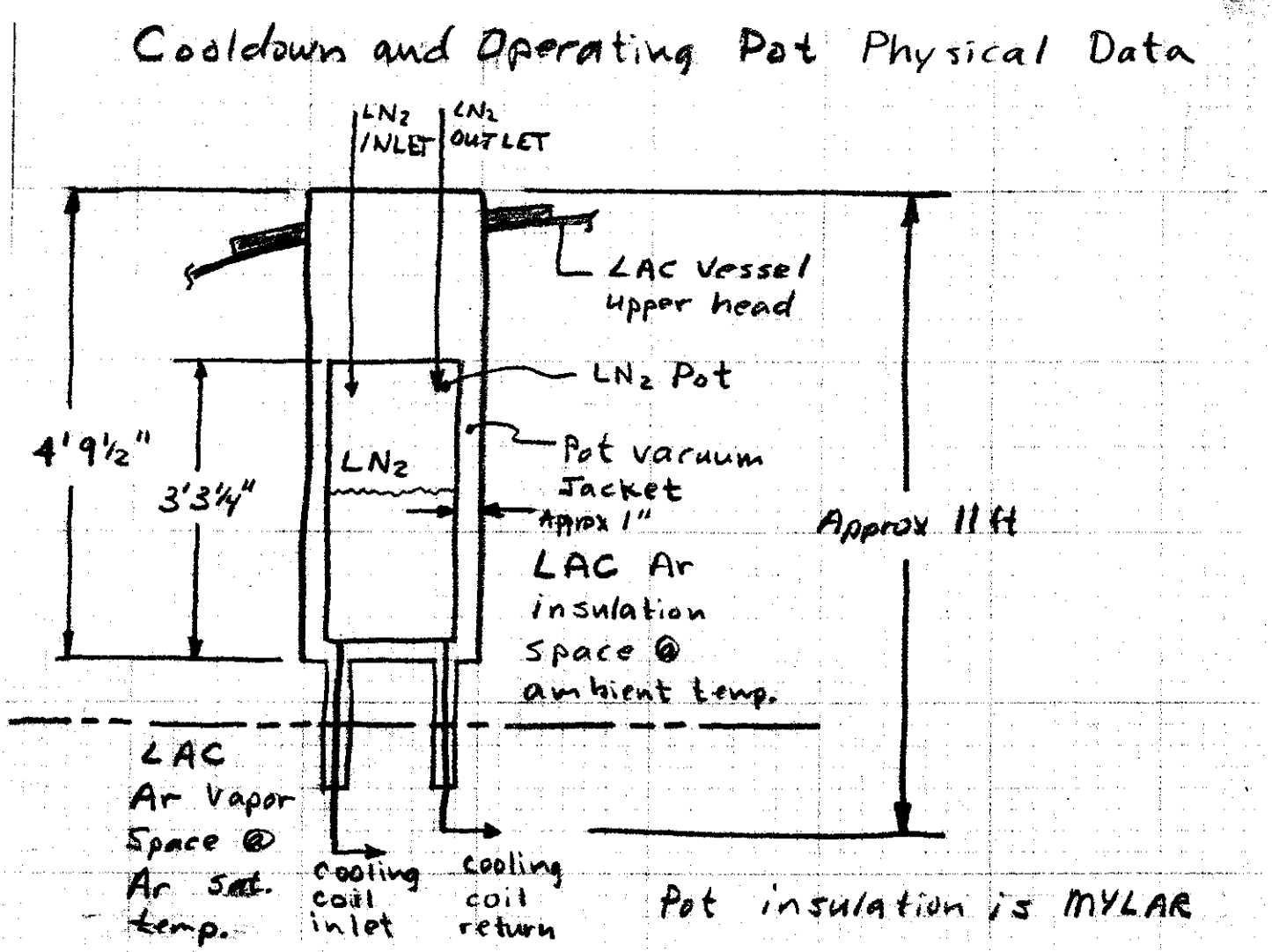

Total surface area for CGA calculations is: $A = 20.30 ft^2$ of surface.

Total LN_2 volume is: 19.74 gal. LN_2.

MAWP = 50PSIG/FV.

The vessels are ASME certified.

The argon recondenser for steady state operation, reference the CCI drawing 7414-E included in Appendix A, and the argon recondenser for cooldown, reference the CCI drawing 7485-E also included in Appendix A, will be herein referred to as the "operating pot" and the "cooldown pot" in this report. These devices are to be used for pressure maintenance of the "Liquid Argon calorimeter (LAC)" for experiment E-706, and for initial cooldown of LAC. Both pots would be used for initial cooldown, but only the operating pot would be used for steady state operation of the LAC, once cooldown is accomplished. The LAC is, in essence, a LAr dewar which will be maintained at less than 7PSIG pressure. The cooling of the LAC would be provided by the pots which receive LN_2 from the LN_2 storage dewar, RD2045, which will be maintained at 20-35PSIG, and is located just East of the MW Detector Hall. The LAC vessel and the pots are located inside the MW Detector Hall.

Both pots are integral parts of the LAC vessel, since they are welded directly to, and in fact, within, the vessel. Only a small area of the pots project through the top head of the LAC vessel, and are nearly completely surrounded by LAC insulation. Consequently, since the LAC and pots are "U" stamped vessels, the ASME Boiler and Pressure Vessel Code, Section VIII, Division 1, Form U-1 includes the required information for <u>both</u> pots on a <u>single</u> form. Except for different relief device sizes and inlet value CV's, these pots are structurally identical. For this reason, and because the supply and vent lines are common to both devices, this report is to cover <u>both</u> pots whose MAWP is 50PSIG/FV.

Please refer to the "E706 Flow Sheet," RD/Cryogenics Department Drawing No. 2220.1-ME-183293, Rev. 11, the system flow diagram, Appendix B.

The relief system for the Operating Pot is provided by two devices, one to relieve

the vacuum jacket, and one to relieve the nitrogen contents. Vacuum relief for each pot is provided by a one inch CVI, Model V-1046, pump out/relief, which will relieve at less than 25PSIG. Nitrogen relief is provided by an AGCO $1'' \times 1''$ Series 80 relief valve as follows for the Operating Pot:

Set Pressure:	48PSIG
Serial Number:	86/02168
Part Number:	81S88-8
Capacity:	198 SCFM, Air
Size:	$1''$
Trim:	Too
Body:	Stainless Steel
Seats:	Teflon

ASME Certified Valve

The relief system for the cooldown pot is identical, except the relief is a $1 - 1/2'' \times 2''$ AGCO Series 80 relief valve as follows for the Cooldown Pot:

Set Pressure:	48PSIG
Serial Number:	86/02167
Part Number:	81S1216-G
Capacity:	508 SCFM Air
Size:	$1 - 1/2'' \times 2''$
Trim:	Too
Body:	Stainless Steel
Seats:	Teflon

ASME Certified Valve

Drawings of the inlet and outlet piping can be found in Appendix A. Please refer

to these drawings. The inlet piping is RD/Cryogenics drawing numbers 2220.1-MD-183272, Top View, and 2220.1-MD-183273, Section A-A. The outlet piping is RD/Cryogenics drawing numbers 2220.1-MD-183303A, View A-A, and 2220.1-MD-183303B, View B-B. Note that the venting vapors are contained in a vacuum jacketed transfer line from the pots to outside of the MW Detector Hall to ambient; and, that the line cannot be plugged or otherwise reduced in capacity by weather conditions, and is nonisolatable. In addition, the relief devices are installed and located in such a way that the cooling effect of the content does not influence the device performance, hence, the valves are located some distance from the pots in the vent piping.

2 Capacity Summaries

COMBINED CAPACITY SUMMARY				
Pots Inlet		Pots Vent		
Liquid lb/sec	Cold Vapor lb/sec	Liquid lb/sec	Cold Vapor lb/sec	Warm Vapor lb/sec
1.187 (11.310 gpm)	0.1362 (110.73 SCFM Air)	9.086 (86.578 gpm)	0.8802 (715.603 SCFM Air)	0.5883 478.288 SCFM Air)
COOLDOWN POT CAPACITY SUMMARY				
Inlet		Vent		
Liquid lb/sec	Cold Vapor lb/sec	Liquid lb/sec	Cold Vapor lb/sec	Warm Vapor lb/sec
1.152 (10.98 gpm)	—	7.179 (68.407 gpm)	0.6972 (566.824 SCFM Air)	0.4661 (378.939 SCFM Air)
OPERATING POT CAPACITY SUMMARY				
Inlet		Vent		
Liquid lb/sec	Cold Vapor lb/sec	Liquid lb/sec	Cold Vapor lb/sec	Warm Vapor lb/sec
1.152 (10.98 gpm)	—	6.744 (64.261 gpm)	0.6555 (532.922 SCFM Air)	0.4382 (356.216 SCFM Air)

For the CGA Fire Condition, 211 SCFM Air is required.

Inlet capacity conditions: $P_1 = 1.16(78)\ \ PSIG,\ P_2 = 50\ \ PSIG.$

Vent capacity conditions: $P_1 = 50\ PSIG,\ P_2 = 0\ PSIG.$

Cold vapor is saturated vapor.

Warm vapor is ambient 60°F gas.

3 Fire Capacity Requirement

Per CGA-5.1.3:

Since the mylar insulation cannot be expected to remain intact, CGA 5.1.3, 5.3.3 will be applied. However, since the vessel is mostly inside the inert gas space of the LAC, the capacity will be reduced to 30%, according to the provisions of CGA-5.3.4. From CGA-5.3.3:

$$\begin{aligned} Q &= G_u A^{.82} \\ A &= \text{outer surface area}(sq.ft^2) \\ &= 5(\frac{14}{12})\pi + (\frac{14}{12})^2\frac{\pi}{4}(2); dia = 14in. \\ A &= 20.46sq.ft. \end{aligned}$$

From CGA 5.1.3 Table 1: $G_u = 59$, so

$$\begin{aligned} Q &= 59(20.46)^{.82} \\ Q &= 701.236SCFM, Air \end{aligned}$$

Thirty percent of Q is:

$$Q = 211SCFM, Air, \text{ capacity required .}$$

This requirement is by far the most stringent of the CGA requirements.

4 Outer Vessel Relief Requirement

Per CGA-5.13, 4.9.2 and CGA-341, 6.(13.):

$$\text{Required Area} = A_R = 2.4E-4 sq.in./lb. \times V_{H^20}$$

$$V_{H^20} = \text{Liquid Volume} \times 8.36 lb/gal.H^20$$

$$A_R = 0.00024(8.36)(V) \qquad V = \frac{\pi}{4}(\frac{12.75}{12})^2(3)(7.432\frac{gal.}{ft^3})$$

$$A_R = 0.00024(8.36)(19.737) \qquad V = 19.737 gal.$$

$$A_R = 0.0396 sq.in.$$

Relief is provided by use of a CVI 1″ Model V-1046 pump out that will relieve at less than 25PSIG and whose relieving area is greater than 0.0396 sq.in.

5 Liquid Capacity

Since the operating pot and the cooldown pot must both relieve to the same vent line, both pots are studied to get the combined capacity of the system. To facilitate these computations, the circuit can be schematicized as shown below:

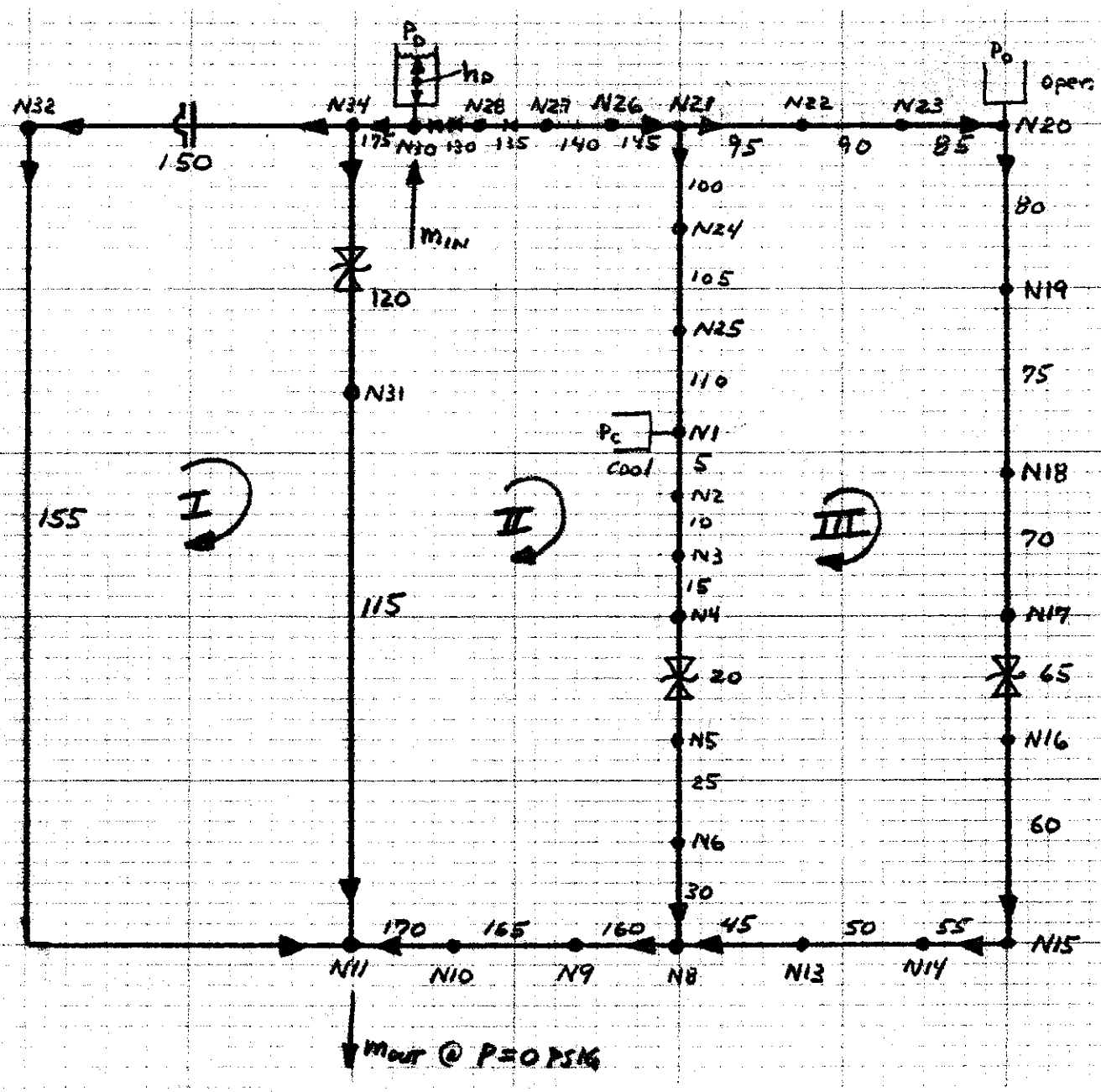

The resistances given are due to fittings, section changes, etc. The relief valve flow can be found from

$$\kappa = 891d^4/C_V^2 \qquad \text{Crane Tech Bulletin No. 410}$$

$$\text{where } \kappa = f(L/D) \text{ resistance}$$

$$d = \text{valve diameter}$$

$$C_V = \text{the valve coefficient of velocity}$$

For the operation pot, element 65 of the schematic, $C_V = 6.07$ and $d = 0.5$ inch, so

$$\kappa = 891(.5)^4/(6.07)^2$$

$$\kappa = 1.5060, \text{ operating pot relief valve.}$$

For the cooldown pot, element 20 of the schematic, $C_V = 15.59$ and $d = 0.8 inch$, so

$$\kappa = 891(.8)^4/(15.59)^2$$

$$\kappa = 1.50, \text{ cooldown pot relief valve}$$

Mass flow rate then will be evaluated from

$$m = d^2\gamma\sqrt{\frac{g}{C\kappa}\left(\frac{144\Delta P}{\gamma} + \Delta Z\right)}$$

$$C = 16913$$

$$\text{where } d = \text{Pipe I.D., inches}$$

$$\Delta P = P_1 - P_2, \ PSIG$$

$$\gamma = \text{fluid density}, lb/ft^3$$

$$g = 32.174 ft/sec^2$$

$$\Delta Z = Z_1 - Z_2, ft$$

$$\kappa = \text{total overall equivalent resistance}$$

The equivalent resistance for the four flex line sections in the circuit were evaluated according to the manufacturer's data, based on LN_2 flow.

For the cooldown pot flex line, element 25 of the schematic, the equivalent length should be 18.30ft of flex line, ID = 2.635 inch, and for the operating pot flex line, element 55 of the schematic, should be 25.2 ft of flex line, ID = 1.6820 inch. For the common vent flex line, element 165 of the schematic, should be 270 ft of flex line, ID = 2.157 inch. The inlet flex line section, element 140 of the schematic should be taken as 540 ft of flex line, ID = 0.884 inch. These values can be obtained from

$$\kappa = \frac{(92.2722 \times 10^{-3} d^2)^2 \Delta p \gamma g}{m^2}$$

and

$$L = \frac{\kappa d}{f}$$

where Δp, m, and d are given by the manufacturer.

These values and all other notable forms of resistance are tabulated on the next page.

5.1 Pipe Properties

FLOWLINE NUMBER	DIAMETER INCHES	LENGTH FEET	ROUGHNESS FEET	L/D LOSS DIMENSIONLESS	K LOSS DIMENSIONLESS
5	.62200	2.5833	.20000E-03	0.	.50000
10	2.1570	1.1875	.20000E-03	60.000	13.199
15	1.6820	1.0521	.20000E-03	0.	0.
20	.80000	0.	.20000E-03	0.	1.5000
25	2.6350	18.300	.20000E-03	0.	.16500
30	2.1570	2.1458	.20000E-03	140.00	.24240
45	2.1570	2.0625	.20000E-03	80.000	8.2150
50	1.0970	.46670	.20000E-03	30.000	.28730
55	1.6820	25.200	.20000E-03	0.	0.
60	1.0970	.72167	.20000E-03	30.000	0.
65	.50000	0.	.20000E-03	0.	1.5060
70	1.0970	1.2500	.20000E-03	0.	0.
75	2.1570	1.1875	.20000E-03	60.000	18.210
80	.62200	2.5833	.20000E-03	0.	.50000
85	.62200	7.8542	.20000E-03	0.	36.420
90	.62200	2.4375	.20000E-03	0.	0.
95	.88400	3.2344	.20000E-03	70.000	1.0300
100	.88400	3.2344	.20000E-03	70.000	1.0300
105	.62200	2.4375	.20000E-03	0.	0.
110	.62200	7.8542	.20000E-03	0.	4.2605
115	1.0970	5.0000	.20000E-03	40.000	.78000
120	.50000	0.	.20000E-03	0.	1.5060
130	1.6820	63.917	.20000E-03	80.000	8.3040
135	.88400	33.052	.20000E-03	110.00	3.9020
140	.88400	540.00	.20000E-03	0.	0.
145	.88400	6.8950	.20000E-03	50.000	0.
150	1.0000	0.	.20000E-03	75.000	0.
155	1.0970	5.0000	.20000E-03	40.000	.78000
160	2.1570	8.0000	.20000E-03	60.000	0.
165	2.1570	270.00	.20000E-03	0.	0.
170	2.1570	5.0000	.20000E-03	180.00	.78000
175	1.4420	5.6333	.20000E-03	0.	1.1289

L/D LOSSES ARE THE ADDITIONAL L/D FRICTIONAL TYPE
K LOSSES ARE THE K TIMES THE VELOCITY HEAD TYPE

5.2 Nodal Elevation

NODE	1	ELEVATION	15.417
NODE	2	ELEVATION	17.510
NODE	3	ELEVATION	17.510
NODE	4	ELEVATION	18.698
NODE	5	ELEVATION	19.667
NODE	6	ELEVATION	19.667
NODE	8	ELEVATION	19.000
NODE	9	ELEVATION	19.760
NODE	10	ELEVATION	19.760
NODE	11	ELEVATION	16.688
NODE	13	ELEVATION	20.383
NODE	14	ELEVATION	20.344
NODE	15	ELEVATION	20.344
NODE	16	ELEVATION	20.344
NODE	17	ELEVATION	18.698
NODE	18	ELEVATION	17.510
NODE	19	ELEVATION	17.510
NODE	20	ELEVATION	15.417
NODE	21	ELEVATION	20.281
NODE	22	ELEVATION	17.427
NODE	23	ELEVATION	16.073
NODE	24	ELEVATION	17.427
NODE	25	ELEVATION	16.073
NODE	26	ELEVATION	19.000
NODE	27	ELEVATION	19.000
NODE	28	ELEVATION	3.1980
NODE	30	ELEVATION	2.6670
NODE	31	ELEVATION	7.5000
NODE	32	ELEVATION	7.5000
NODE	34	ELEVATION	7.5000

NOTE: FLOWLINES SLOPING DOWNWARDS IN THE CLOCKWISE DIRECTION ARE POSITIVE

5.3 Combined Liquid Flow to the Pots

The overall total equivalent resistance from node 30, the LN_2 Storage Dewar, to both pots, node 1 and node 20, is $\kappa = 247.3704$.

Taking the dewar, assumed full with 25 feet of LN_2 at 1.16 MAWP = 90.48 PSIG, the supply pressure would be

$$P_0 = 98.613\ PSIG.$$

Taking the pots at their MAWP = 50 PSIG, and d = 0.884 inch, 3/4 LPS Pipe,

$$\begin{aligned} m &= (.884)^2(46.848)\sqrt{\frac{32.174}{16913(247.3704)}\left(\frac{144(98.613-50)}{46.848}+2.667-15.417\right)} \\ m &= 1.187 lb/sec \\ m &= 11.310 gpm \text{ combined flow to pots.} \end{aligned}$$

5.4 Combined Liquid Vent Capacity

The overall total equivalent resistance from nodes 1 and 20, through the vent to node 11 is $\kappa = 166.7526$.

Taking the pots at their MAWP = 50 PSIG and the vent at 0 PSIG, for d = 2.157 inch, 2″IPS,

$$m = (2.157)^2(46.848)\sqrt{\frac{32.174}{16913(166.7526)}\left(\frac{144(50-0)}{46.848}+15.417-16.688\right)}$$

$$m = 9.089 lb/sec$$

$$m = 86.578 gpm, \text{ combined liquid vent capacity}$$

5.5 Individual Liquid Capacity to the Pots

The individual liquid flow to the operating pot is approximately equal to the liquid flow to the cooldown pot, since the overall total equivalent resistance from node 30 to nodes 1 and 20 is $\kappa = 262.423$. As before, $P_0 = 98.613$, pot pressure is 50 PSIG and d = .884in, 3/4″IPS.

$$m = (.884)^2(46.848)\sqrt{\frac{32.174}{16913(262.423)}\left(\frac{144(98.613-50)}{46.848}+2.667-15.417\right)}$$

$$m = 1.152 lb/sec$$

$$m = 10.9080 gpm, \text{liquid flow to operating pot or cooldown pot.}$$

5.6 Cooldown Pot Liquid Vent Capacity

The overall total equivalent resistance from node 1 through the vent to node 11 is $\kappa = 267.284$.

Taking the cooldown pot at MAWP = 50 PSIG and 0 PSIG vent pressure, d = 2.157 inch, 2″IPS,

$$m = (2.157)^2(46.848)\sqrt{\frac{32.174}{16913(267.284)}\left(\frac{144(50-0)}{46.848}+15.417-16.688\right)}$$

$$m = 7.179 lb/sec$$

$$m = 68.407 gpm, \text{ cooldown pot vent capacity}$$

5.7 Operating Pot Liquid Vent Capacity

The overall total equivalent resistance from node 20 through the vent to node 11 is $\kappa = 302.8805$.

Taking the operating pot @ MAWP = 50 PSIG and 0 PSIG vent pressure, d = 2.157 inch, 2″ IPS,

$$m = (2.157)^2(46.848)\sqrt{\frac{32.174}{16913(302.8804)}\left(\frac{144(50-0)}{46.848}+15.417-16.688\right)}$$

$$m = 6.744 lb/sec$$

$$m = 64.261 gpm, \text{ operating pot vent capacity.}$$

6 Vapor Capacities

Rather than discuss particular modes of failure, the capacities will be computed over a wide range of values, reported and compared. Since specific heat ratios above 1.4 are difficult to find in the literature, and as matter of convenience, a direct solution of the differential equations for the compressible flow influenced by friction was accomplished. Verification of these results can be made by using the Fanno function values given.

Notes on verification, using Fanno functions:

1. Since the fL/D parameter, evaluated using Fanno functions, is independent of the differential equations solved, then $(fL/D)_1 - (fL/D)_2 = fL/D$ of the pipe analyzed; *i.e.*, $L_{eq} = \frac{D}{f}[(fL/D)_1 - (fL/D)_2]$.

2. At the inlet or the outlet, Fanno functions provide that

$$\frac{m}{POA}\left[\frac{TO\ C_pJ}{g}\left(\frac{K-1}{K}\right)\right]^{\frac{1}{2}} = F(mach),$$

so

$$m = F(mach)POA\left[\frac{g}{TO\ C_pJ}\frac{K}{(K-1)}\right]^{\frac{1}{2}},$$

where

m	=	mass flow, lb/sec
$F(mach)$	=	value of the function at a mach number
g	=	32.174 ft/sec
J	=	777.8 $\frac{ft/lb}{BTU}$
A	=	cross sectional area, ft^2
C_p	=	specific heat $\frac{BTU}{lb\ R}$
K	=	specific heat ratio
TO	=	stagnation temp, R
PO	=	Local stagnation pressure, lb/ft^2
PO	=	$P_{static}/F(mach)$

6.1 Combined Cold Vapor Flow to the Pots

The overall total equivalent resistance, expressed as equivalent length using a friction factor of 0.027, is $L_{eq} = 674ft$ of 3/4 IPS Pipe, ID = 0.884 inch. This is evaluated from node 30 to nodes 1 and 20.

Taking the LN_2 Storage Dewar at 116% of its MAWP = 105.18 PSIA and the pots at MAWP = 64.696 PSIA, the output results given on the following page give a mass flow of

$$m = 0.1362 lb/sec$$

$$m = 110.73\ SCFM\ AIR, \text{combined cold vapor flow to both pots}$$

6.2 Combined Cold Vapor Vent Capacity

The overall total equivalent resistance, expressed as equivalent length using a friction factor of 0.027, is $L_{eq} = 1110.140 ft$ of 1-1/2″ IPS Pipe, ID = 2.157 inches. This is evaluated from nodes 1 and 20 to node 11.

Taking the pot pressure to be MAWP = 64.696 PSIA and the vent to atmosphere at 14.696 PSIA, the results given are

$$m = 0.8802 lb/sec$$

$$m = 715.603\ SCFM\ AIR, \text{combined cold vapor flow to vent}$$

COMBINED COLD VAPOR FLOW TO THE POTS

```
*******   E L E M E N T   1   *******

                    I N I T I A L   V A L U E S    X =  0.
STATIC PRESSURE=   105.16     PSIA          TEMP=     178.12                RANKINE
       DENSITY=    .83678     LBM/CUFT    LOCAL ENTROPY=  0.               BTU/LBM-R
  SPECIFIC HEAT=   .32765     BTU/LBM-R SPEC HEAT RATIO=   1.6630
 SONIC VELOCITY=   984.08     FT/SEC    STAGNATION TEMP=   178.21           RANKINE
      MASS FLOW=   .13620     LBM/SEC   *** MACH NUMBER=   .38806E-01       *******
   SECTION AREA=   .61375     SQINCH    D/DX(SECT AREA)=  0.                SQFT/FT
   TOTAL LENGTH=   674.00     FEET          HYD DIAMETER=   .88400          INCH
FRICTION FACTOR=   .27000E-01              K RESISTANCES=  0.
LOCAL WALL AREA=   0.         SQ FEET   D/DX(WALL AREA)=  0.                SQFT/FT
LOCAL WALL TEMP=   460.00     RANKINE  LOCAL HEAT TRANS=  0.                BTU/LBM
COEF HEAT TRANS=   0.         BTU/SEC-SQFT-R

                    L O C A L   V A L U E S
          X=    0.            FEET     MACH NUMBER=     .388063E-01
STATIC PRESSURE=   105.176    LBF/SQIN        STAG TEMP=  178.209           RANKINE
   TEMPERATURE=    178.120    RANKINE    STAG ENTHALPY=  58.3902            BTU/LBM
       DENSITY=    .836780    LBM/CUFT    SECTION AREA=  .613754            SQIN
 SONIC VELOCITY=   984.085    FT/SEC    D/DX SEC AREA= 0.                   SQIN/IN
       ENTROPY=  0.           BTU/LBM-R

                    L O C A L   V A L U E S
          X=     674.000      FEET     MACH NUMBER=     .630015E-01
STATIC PRESSURE=   64.7575    LBF/SQIN        STAG TEMP=  178.209           RANKINE
   TEMPERATURE=    177.975    RANKINE    STAG ENTHALPY=  58.3902            BTU/LBM
       DENSITY=    .515631    LBM/CUFT    SECTION AREA=  .613754            SQIN
 SONIC VELOCITY=   983.664    FT/SEC    D/DX SEC AREA= 0.                   SQIN/IN
       ENTROPY=   .630846E-01 BTU/LBM-R
```

COMBINED COLD VAPOR VENT CAPACITY

```
*******   E L E M E N T   1   *******

                    I N I T I A L   V A L U E S    X =  0.
STATIC PRESSURE=   64.696      PSIA            TEMP=    166.74          RANKINE
       DENSITY=    .71668      LBM/CUFT     LOCAL ENTROPY=  0.          BTU/LBM-R
  SPECIFIC HEAT=   .28934      BTU/LBM-R SPEC HEAT RATIO=   1.5299
 SONIC VELOCITY=   799.91      FT/SEC    STAGNATION TEMP=   166.91      RANKINE
      MASS FLOW=   .88020 ←   LBM/SEC   *** MACH NUMBER=    .60505E-01 *******
   SECTION AREA=   3.6542     SQINCH    D/DX(SECT AREA)=  0.            SQFT/FT
   TOTAL LENGTH=   1110.1     FEET         HYD DIAMETER=   2.1570       INCH
FRICTION FACTOR=   .27000E-01              K RESISTANCES=  0.
LOCAL WALL AREA=  0.           SQ FEET   D/DX(WALL AREA)=  0.            SQFT/FT
LOCAL WALL TEMP=   460.00      RANKINE  LOCAL HEAT TRANS=  0.            BTU/LBM
COEF HEAT TRANS=  0.           BTU/SEC-SQFT-R

                    L O C A L   V A L U E S
          X=    0.             FEET     MACH NUMBER=     .605046E-01
STATIC PRESSURE=  64.6960      LBF/SQIN        STAG TEMP=  166.906       RANKINE
   TEMPERATURE=   166.744      RANKINE     STAG ENTHALPY=  48.2928       BTU/LBM
       DENSITY=   .716677      LBM/CUFT     SECTION AREA=  3.65418       SQIN
 SONIC VELOCITY=  799.912      FT/SEC      D/DX SEC AREA= 0.             SQIN/IN
       ENTROPY= 0.             BTU/LBM-R

                    L O C A L   V A L U E S
          X=    1110.14        FEET     MACH NUMBER=     .264045
STATIC PRESSURE=  14.6968      LBF/SQIN        STAG TEMP=  166.906       RANKINE
   TEMPERATURE=   163.879      RANKINE     STAG ENTHALPY=  48.2928       BTU/LBM
       DENSITY=   .165653      LBM/CUFT     SECTION AREA=  3.65418       SQIN
 SONIC VELOCITY=  793.009      FT/SEC      D/DX SEC AREA= 0.             SQIN/IN
       ENTROPY=   .143513      BTU/LBM-R
```

6.3 Cooldown Pot Cold Vapor Vent Capacity

The total overall equivalent resistance, expressed as equivalent length using a friction factor of 0.027, is $L_{eq} = 1779.4185 ft$ of 1-1/2″ IPS Pipe, ID = 2.157 inches. This is evaluated from node 20 to node 11.

Taking the pot pressure to be MAWP = 64.696 PSIA and the vent to atmosphere at 14.696 PSIA, the results are

$$m = 0.6972\ lb/sec$$

$$m = 566.824\ SCFM\ AIR, \text{Cooldown pot cold vapor vent capacity}$$

6.4 Operating Cold Vapor Vent Capacity

The total overall equivalent resistance, expressed as equivalent length using a friction factor of 0.027, is $L_{eq} = 2016.3989 ft$ of 1-1/2″ IPS Pipe, ID = 2.157 inches. This is evaluated from node 20 to node 11.

Taking the pot pressure to be MAWP = 64.696 PSIA and the vent to atmosphere at 14.696 PSIA, the results are

$$m = 0.6555 lb/sec$$

$$m = 532.922\ SCFM\ AIR, \text{Operating pot cold vapor vent capacity}$$

```
*******   E L E M E N T   1   *******

                    I N I T I A L   V A L U E S     X =  0.
STATIC PRESSURE=   64.696      PSIA            TEMP=    166.74            RANKINE
       DENSITY=    .71668      LBM/CUFT     LOCAL ENTROPY=  0.            BTU/LBM-R
  SPECIFIC HEAT=   .28934      BTU/LBM-R SPEC HEAT RATIO=   1.5299
 SONIC VELOCITY=   799.91      FT/SEC    STAGNATION TEMP=   166.85        RANKINE
      MASS FLOW=   .69720 <--  LBM/SEC   *** MACH NUMBER=   .47925E-01    *******
   SECTION AREA=   3.6542      SQINCH    D/DX(SECT AREA)=  0.              SQFT/FT
   TOTAL LENGTH=   1779.4      FEET         HYD DIAMETER=   2.1570         INCH
FRICTION FACTOR=   .27000E-01                K RESISTANCES=  0.
LOCAL WALL AREA=   0.          SQ FEET   D/DX(WALL AREA)=  0.              SQFT/FT
LOCAL WALL TEMP=   460.00      RANKINE  LOCAL HEAT TRANS=  0.              BTU/LBM
COEF HEAT TRANS=   0.          BTU/SEC-SQFT-R


                    L O C A L   V A L U E S
        X=    0.     FEET     MACH NUMBER=    .479253E-01
STATIC PRESSURE=   64.6960     LBF/SQIN        STAG TEMP=  166.845        RANKINE
   TEMPERATURE=    166.744     RANKINE     STAG ENTHALPY=  48.2754        BTU/LBM
       DENSITY=    .716677     LBM/CUFT     SECTION AREA=  3.65418        SQIN
 SONIC VELOCITY=   799.912     FT/SEC      D/DX SEC AREA= 0.              SQIN/IN
       ENTROPY= 0.             BTU/LBM-R


                    L O C A L   V A L U E S
        X=    1779.42    FEET     MACH NUMBER=    .209681
STATIC PRESSURE=   14.7062     LBF/SQIN        STAG TEMP=  166.845        RANKINE
   TEMPERATURE=    164.924     RANKINE     STAG ENTHALPY=  48.2754        BTU/LBM
       DENSITY=    .164707     LBM/CUFT     SECTION AREA=  3.65418        SQIN
 SONIC VELOCITY=   795.535     FT/SEC      D/DX SEC AREA= 0.              SQIN/IN
       ENTROPY=    .145290     BTU/LBM-R
```

```
*******   E L E M E N T   1   *******

                    I N I T I A L   V A L U E S    X =  0.
STATIC PRESSURE=   64.696      PSIA            TEMP=    166.74          RANKINE
       DENSITY=    .71668      LBM/CUFT    LOCAL ENTROPY=  0.           BTU/LBM-R
  SPECIFIC HEAT=   .28934      BTU/LBM-R SPEC HEAT RATIO=   1.5299
 SONIC VELOCITY=   799.91      FT/SEC    STAGNATION TEMP=   166.83      RANKINE
      MASS FLOW=   .65550 <-   LBM/SEC   *** MACH NUMBER=   .45059E-01  *******
   SECTION AREA=   3.6542      SQINCH    D/DX(SECT AREA)=  0.           SQFT/FT
   TOTAL LENGTH=   2016.4      FEET          HYD DIAMETER=   2.1570      INCH
FRICTION FACTOR=   .27000E-01                K RESISTANCES=  0.
LOCAL WALL AREA=  0.           SQ FEET   D/DX(WALL AREA)=  0.           SQFT/FT
LOCAL WALL TEMP=   460.00      RANKINE  LOCAL HEAT TRANS=  0.           BTU/LBM
COEF HEAT TRANS=  0.           BTU/SEC-SQFT-R


                    L O C A L   V A L U E S
          X=    0.            FEET     MACH NUMBER=    .450588E-01
STATIC PRESSURE=  64.6960      LBF/SQIN        STAG TEMP=  166.834      RANKINE
   TEMPERATURE=   166.744      RANKINE     STAG ENTHALPY=  48.2720      BTU/LBM
       DENSITY=   .716677      LBM/CUFT     SECTION AREA=  3.65418      SQIN
 SONIC VELOCITY=  799.912      FT/SEC      D/DX SEC AREA= 0.            SQIN/IN
       ENTROPY= 0.             BTU/LBM-R

                    L O C A L   V A L U E S
          X=    2016.40       FEET     MACH NUMBER=    .198320
STATIC PRESSURE=  14.6270      LBF/SQIN        STAG TEMP=  166.834      RANKINE
   TEMPERATURE=   165.113      RANKINE     STAG ENTHALPY=  48.2720      BTU/LBM
       DENSITY=   .163633      LBM/CUFT     SECTION AREA=  3.65418      SQIN
 SONIC VELOCITY=  795.990      FT/SEC      D/DX SEC AREA= 0.            SQIN/IN
       ENTROPY=   .146162      BTU/LBM-R
```

6.5 Combined Warm Vapor Vent Capacity

As before, the total overall equivalent resistance, expressed as equivalent length using a friction factor of 0.027, is $L_{eq} = 1110.140 ft$ of 1-1/2" IPS Pipe, ID = 2.157 inches. Evaluated from nodes 1 and 20 to node 11.

Taking the pot pressure to be MAWP = 64.696 PSIA and the vent to atmosphere at 14.696 PSIA, the results are

$$m = 0.5883 lb/sec$$

$$m = 478.288\ SCFM\ AIR, \text{Combined warm vapor vent capacity}$$

```
*******   E L E M E N T   1   *******

                    I N I T I A L   V A L U E S    X =  0.
STATIC PRESSURE=   64.696      PSIA              TEMP=    520.00          RANKINE
       DENSITY=    .32027      LBM/CUFT     LOCAL ENTROPY=  0.            BTU/LBM-
  SPECIFIC HEAT=   .24942      BTU/LBM-R  SPEC HEAT RATIO=   1.4051
 SONIC VELOCITY=   1146.7      FT/SEC     STAGNATION TEMP=   520.42       RANKINE
      MASS FLOW=   .58830 <--  LBM/SEC    *** MACH NUMBER=    .63123E-01  *******
   SECTION AREA=   3.6542     SQINCH     D/DX(SECT AREA)=  0.             SQFT/FT
   TOTAL LENGTH=   1110.1     FEET          HYD DIAMETER=   2.1570        INCH
FRICTION FACTOR=   .27000E-01                K RESISTANCES=  0.
LOCAL WALL AREA=   0.         SQ FEET    D/DX(WALL AREA)=  0.             SQFT/FT
LOCAL WALL TEMP=   460.00     RANKINE   LOCAL HEAT TRANS=  0.             BTU/LBM
COEF HEAT TRANS=   0.         BTU/SEC-SQFT-R

                    L O C A L   V A L U E S
          X=    0.            FEET      MACH NUMBER=     .631228E-01
STATIC PRESSURE=   64.6960    LBF/SQIN          STAG TEMP=   520.420       RANKINE
   TEMPERATURE=    520.000    RANKINE     STAG ENTHALPY=   129.805        BTU/LBM
       DENSITY=    .320272    LBM/CUFT     SECTION AREA=   3.65418        SQIN
 SONIC VELOCITY=   1146.74    FT/SEC      D/DX SEC AREA= 0.               SQIN/IN
       ENTROPY= 0.            BTU/LBM-R

                    L O C A L   V A L U E S
          X=     1110.14      FEET      MACH NUMBER=     .275873
STATIC PRESSURE=   14.6963    LBF/SQIN          STAG TEMP=   520.420       RANKINE
   TEMPERATURE=    512.519    RANKINE     STAG ENTHALPY=   129.805        BTU/LBM
       DENSITY=    .738146E-01 LBM/CUFT     SECTION AREA=   3.65418        SQIN
 SONIC VELOCITY=   1138.47    FT/SEC      D/DX SEC AREA= 0.               SQIN/IN
       ENTROPY=    .102965    BTU/LBM-R
```

6.6 Cooldown Pot Warm Vapor Vent Capacity

As before, the total overall equivalent resistance, expressed as equivalent length using a friction factor of 0.027, is $L_{eq} = 1779.4185 ft$ of 1-1/2″ IPS Pipe, ID = 2.157 inches. Evaluated from node 1 to node 11.

Taking the pot pressure to be MAWP = 64.696 PSIA and the vent to atmosphere at 14.696 PSIA, the results are

$$m = 0.4661 lb/sec$$

$$m = 378.939\ SCFM\ AIR, \text{Cooldown pot warm vapor vent capacity}$$

6.7 Operating Pot Warm Vapor Vent Capacity

The total overall equivalent length using a friction factor of 0.027, is $L_{eq} = 2016.3989 ft$ of 1-1/2″ IPS pipe, ID = 2.157 inches. Evaluated from node 20 to node 11.

Taking the pot pressure to be MAWP = 64.696 PSIA and the vent to atmosphere at 14.696 PSIA, the results are

$$m = 0.43815 lb/sec$$

$$m = 356.216\ SCFM\ AIR, \text{Operating pot warm vapor vent capacity.}$$

```
*******   E L E M E N T   1   *******

                    I N I T I A L   V A L U E S    X =  0.
STATIC PRESSURE=   64.696      PSIA            TEMP=    520.00            RANKINE
       DENSITY=    .32027      LBM/CUFT     LOCAL ENTROPY=  0.            BTU/LBM-
  SPECIFIC HEAT=   .24942      BTU/LBM-R SPEC HEAT RATIO=   1.4051
 SONIC VELOCITY=   1146.7      FT/SEC    STAGNATION TEMP=   520.26        RANKINE
      MASS FLOW=   .46610 <--  LBM/SEC   *** MACH NUMBER=    .50011E-01  *******
   SECTION AREA=   3.6542      SQINCH    D/DX(SECT AREA)=  0.             SQFT/FT
   TOTAL LENGTH=   1779.4      FEET          HYD DIAMETER=   2.1570       INCH
FRICTION FACTOR=   .27000E-01                K RESISTANCES=  0.
LOCAL WALL AREA=   0.          SQ FEET   D/DX(WALL AREA)=  0.             SQFT/FT
LOCAL WALL TEMP=   460.00      RANKINE  LOCAL HEAT TRANS=  0.             BTU/LBM
COEF HEAT TRANS=   0.          BTU/SEC-SQFT-R


                    L O C A L   V A L U E S
        X=    0.          FEET      MACH NUMBER=    .500111E-01
STATIC PRESSURE=   64.6960     LBF/SQIN        STAG TEMP=  520.263        RANKINE
   TEMPERATURE=    520.000     RANKINE     STAG ENTHALPY=  129.766        BTU/LBM
       DENSITY=    .320272     LBM/CUFT     SECTION AREA=  3.65418        SQIN
 SONIC VELOCITY=   1146.74     FT/SEC     D/DX SEC AREA= 0.               SQIN/IN
      ENTROPY= 0.            BTU/LBM-R

                    L O C A L   V A L U E S
        X=    1779.42         FEET      MACH NUMBER=    .219725
STATIC PRESSURE=   14.6575     LBF/SQIN        STAG TEMP=  520.263        RANKINE
   TEMPERATURE=    515.225     RANKINE     STAG ENTHALPY=  129.766        BTU/LBM
       DENSITY=    .732334E-01 LBM/CUFT     SECTION AREA=  3.65418        SQIN
 SONIC VELOCITY=   1141.47     FT/SEC     D/DX SEC AREA= 0.               SQIN/IN
      ENTROPY=    .104468     BTU/LBM-R
```

```
*******   E L E M E N T   1   *******

                    I N I T I A L   V A L U E S    X =  0.
STATIC PRESSURE=   64.696      PSIA          TEMP=     520.00          RANKINE
       DENSITY=    .32027      LBM/CUFT    LOCAL ENTROPY=  0.          BTU/LBM-R
  SPECIFIC HEAT=   .24942      BTU/LBM-R  SPEC HEAT RATIO=   1.4051
 SONIC VELOCITY=   1146.7      FT/SEC     STAGNATION TEMP=   520.23    RANKINE
      MASS FLOW=   .43815<--   LBM/SEC    *** MACH NUMBER=   .47012E-01 *******
   SECTION AREA=   3.6542      SQINCH     D/DX(SECT AREA)=  0.          SQFT/FT
   TOTAL LENGTH=   2016.4      FEET          HYD DIAMETER=   2.1570     INCH
FRICTION FACTOR=   .27000E-01                K RESISTANCES=  0.
LOCAL WALL AREA=   0.          SQ FEET    D/DX(WALL AREA)=  0.          SQFT/FT
LOCAL WALL TEMP=   460.00      RANKINE   LOCAL HEAT TRANS=  0.          BTU/LBM
COEF HEAT TRANS=   0.          BTU/SEC-SQFT-R


                    L O C A L   V A L U E S
          X=    0.             FEET     MACH NUMBER=     .470122E-01
STATIC PRESSURE=   64.6960     LBF/SQIN       STAG TEMP=   520.233      RANKINE
   TEMPERATURE=    520.000     RANKINE     STAG ENTHALPY=   129.759     BTU/LBM
       DENSITY=   .320272      LBM/CUFT     SECTION AREA=   3.65418     SQIN
 SONIC VELOCITY=   1146.74     FT/SEC      D/DX SEC AREA= 0.            SQIN/IN
       ENTROPY= 0.             BTU/LBM-R

                    L O C A L   V A L U E S
          X=     2016.40       FEET     MACH NUMBER=     .207051
STATIC PRESSURE=   14.6295     LBF/SQIN       STAG TEMP=   520.233      RANKINE
   TEMPERATURE=    515.754     RANKINE     STAG ENTHALPY=   129.759     BTU/LBM
       DENSITY=   .730184E-01  LBM/CUFT     SECTION AREA=   3.65418     SQIN
 SONIC VELOCITY=   1142.05     FT/SEC      D/DX SEC AREA= 0.            SQIN/IN
       ENTROPY=   .104662      BTU/LBM-R
```

APPENDIX A

Contents:

- CCI 7414-K, "LN_2 Vessel Assembly, Argon Recondenser (Steady State)"
- CCI 7485-E, "LN_2 Vessel Assembly, Argon Recondenser (Cooldown)"
- RD/Cryogenics 2220.1-MD-183272, "Tee Section, Transfer Line, Top View"
- RD/Cryogenics 2220.1-MD-183273, "Tee Section, Transfer Line, Section A-A"
- RD/Cryogenics 2220.1-MD-183303A, "Vent and Relief Piping Assembly, View A-A"
- RD/Cryogenics 2220.1-MD-183303B, "Vent and Relief Piping Assembly, View B-B"

ROCHESTER PARTICLE PHYSICS

P.01

FRED LOBKOWICZ - E706 - X 4891
4 PAGES

Chicago Bridge & Iron Company

75 Executive Drive, Suite 201
Aurora, IL 60505
Mailing Address:
Caller Service No. 2022
Aurora, IL 60507
Phone: 312-844-3750

LETTER OF TRANSMITTAL

DATE	11/18/85	CONTRACT NO	851553
RE.	YOUR P.O. #F-41438		
	17'0 x 28' LIQUID ARGON DEWAR		
	UNIVERSITY OF ROCHESTER		
	FOR FERMILAB/DOE		
	BATAVIA, ILLINOIS		

TO University of Rochester
Department of Physics & Astronomy
River Campus Station
Rochester, NY 14627

ATTN: Professor Frederick Lobkowicz

WE ARE SENDING YOU ☒ Attached ☐ Under separate cover via _____ the following items:

☐ Drawings ☐ Prints ☐ Specifications ☐ Change Order
☐ Copy of letter ☐ Plans ☐ Bill Sheets ☐ _____

COPIES	DATE	MARK	DESCRIPTION

THESE ARE TRANSMITTED as checked below:

☐ For approval ☐ Approved as submitted ☐ Resubmit _____ copies for approval
☐ For your use ☐ Approved as noted ☐ Submit _____ copies for distribution
☒ As requested ☐ Returned for corrections ☐ Return _____ corrected prints
☐ For review and comment ☐ _____
☐ RETURN DUE _____ 19 _____

REMARKS Attached Please Find One Print of Form U-1 & U-1A Manufacturer's Data Report For Pressure Vessels. If you Require Any Additional Information, Please Let Us Know.

COPY TO DCE Transmittal File #851553

Bob Goluke

R. J. Goluke

FORM U MANUFACTURER'S DATA REPORT FOR PRESSURE VESSELS
(Alternative Form for Single Chamber, Completely Shop-Fabricated Vessels Only)
As Required by the Provisions of the ASME Code Rules, Section VIII, Division 1

1. Manufactured and certified by Weldon, Inc., 51 Terminal Ave., Clark, New Jersey 07066
(Name and address of manufacturer)

2. Manufactured for Cryofab, Inc., P.O. Box 485, Kenilworth, N.J. 07033
(Name and address of purchaser)

3. Location of installation University of Rochester, Rochester, N.Y.
(Name and address)

4. Type Vert. Tank (Horiz. or vert., tank) 3381-162 (Mfr's serial No.) --- (CRN) 7414-E/7483-E (Drawing No.) 3770/3771 (Nat'l Bd. No.) 1985 (Year built)

5. The chemical and physical properties of all parts meet the requirements of material specifications of the ASME BOILER AND PRESSURE VESSEL CODE. The design, construction, and workmanship conform to ASME Rules, Section VIII, Division 1 1983 (Year)

to 12/31/84 (Addenda (Date)) ---------- (Code Case No.) ---------- (Special Service per UG-120(e))

6. Shell. SA-312-304 (Mat'l (Spec. No., Grade)) .180" (Nom. Thk. (in.)) 0 (Corr. Allow. (in.)) 1'-0-3/8" (Diam. I.D. (ft. & in.)) 3'-3" (Length (head to head) (ft. & in.))

7. Seams: Butt- Dbl. Weld (Long. (Weld, Dbl., Sgl., Lap, Butt)) None (R.T. (Spot or Full)) 70 (Eff. (%)) None (H.T. (Temp. & Hr.)) None (Type (Vert.)) None (Circumferential (Dbl., Sgl., Lap, Butt)) (R.T. (Spot, Full or None)) 1 (No. of ...)

8. Heads. (a) Mat'l. SA-240-304 (Spec. No., Grade) (b) Mat'l. SA-240-304 (Spec. No., Grade)

	Location (Top, Bottom, Ends)	Minimum Thickness	Corrosion Allowance	Crown Radius	Knuckle Radius	Ellipsoidal Ratio	Conical Apex Angle	Hemispherical Radius	Flat Diameter	Safety Pressure (Convex or Concave)
(a)	Top	5/8"	0	Flat					12-3/4"	Flat
(b)	Bottom	5/8"	0	Flat					12-3/4"	Flat

If removable, bolts used (describe other fastenings) Singl. Fillet Weld (Mat'l. Spec. No., Gr., Size, No.)

MAWP 50/FV psi at max. temp. 100

Min. temp. (when less than -20°F) -325 °F. Hydro. ~~XXXXXXXXXX~~ test pressure 75

10. Nozzles, inspection and safety valve openings:

Purpose (Inlet, Outlet, Drain)	No.	Diam. or Size	Type	Mat'l	Nom. Thk.	Reinforcement Mat'l	How Attached	Location
In & Out	2	1/2"	ButtWeld	SA-312-304	.109"	None	Welded	Head
In & Out	2	1"	ButtWeld	SA-213-304L	.120"	None	Welded	Head
In & Out	2	3/16"	ButtWeld	SA-249-304	.049	SA-240-304	Welded	Head
SAFETY VALVES BY OTHERS.								

11. Supports: Skirt No (Yes or No) Lugs ____ (No.) Legs ____ (No.) Other None (Describe) Attached ____ (Where and how)

12. Remarks: Manufacturer's Partial Data Reports properly identified and signed by Commissioned Inspectors have been furnished for the following items of the report: None (Name of part, item number, Mfr's name and identification, stamped)

(2) Vessels are Argon Recondensers for non-lethal service.
Customer P.O. No. 9089.

CERTIFICATE OF SHOP COMPLIANCE

We certify that the statements made in this report are correct and that all details of design, material, construction, and workmanship of this vessel conform to the ASME Code for Pressure Vessels, Section VIII, Division 1. "U" Certificate of Authorization No. 11,621 expires Aug. 10, 1987

Date 6/7/85 Co. Name Weldon, Inc. (Manufacturer) Signed [signature] (Representative)

CERTIFICATE OF SHOP INSPECTION

Vessel constructed by Weldon, Inc. at 51 Terminal Ave., Clark, New Jersey

I, the undersigned, holding a valid commission issued by the National Board of Boiler and Pressure Vessel Inspectors and/or the State or Province of New Jersey and employed by N.J. Dept. of Labor of Trenton have inspected the component described in this Manufacturer's Data Report on 6/7, 19 85, and state that, to the best of my knowledge and belief, the Manufacturer has constructed this pressure vessel in accordance with ASME Code, Section VIII, Division 1. By signing this certificate neither the Inspector nor his employer makes any warranty, expressed or implied, concerning the pressure vessel described in this Manufacturer's Data Report. Furthermore, neither the Inspector nor his employer shall be liable in any manner for any personal injury or property damage or a loss of any kind arising from or connected with this inspection.

Date 6-7-85 Signed [signature] Commissions NB7135-NJS21

ROCHESTER PARTICLE PHYSICS

DRWN: RTC F.03
CHKD: TCP 11 Jul 85

FORM U-1 MANUFACTURER'S DATA REPORT FOR PRESSURE VESSELS
As Required by the Provisions of the ASME Code Rules, Section VIII, Division 1

Cont. 851553

1. Manufactured and certified by Chicago Bridge & Iron Co. St. Geo. Rd. & IL Rt. 50 Kankakee, IL (Name and address of manufacturer)
2. Manufactured for University of Rochester River Campus Station Rochester, NY (Name and address of purchaser)
3. Location of installation Fermi National Accelerator Lab Batavia, IL (Name and address)
4. Type Vert. (Horiz. or vert., tank) C4773 (Mfg's serial No.) --- (CRN) 1 Rev, 1 (Drawing) 4778 (Nat'l Bd. No.) 1985 (Year built)
5. The chemical and physical properties of all parts meet the requirements of material specifications of the ASME Boiler and Pressure Vessel Code. The design, construction, and workmanship conform to ASME Rules, Section VIII, Division 1 1983 (Year)

Summer 84 (Addenda date) --- (Code Case No.) --- (Special service per UG-120(a))

Items 6-11 incl. to be completed for single wall vessels, jackets of jacketed vessels, or shells of heat exchangers

6. Shell: SA240 TP 304 (Mat'l Spec No., Grade) 9/16 (Nom. Thk. (in.)) --- (Corr. Allow. (in.)) 17'-0 (Diam. I.D. (ft & in.)) 28'-0 (Length (Overall) (ft & in.))
7. Seams: Welded DBL. (Long. (Dbl., Sngl.)) Spot (R.T. (Spot or Full)) 85 (Eff. (%)) --- (N.T. Temp. (°F))
   --- (Time) Welded DBL. (Circ. (Dbl., Sngl.)) Spot (R.T. (Spot, Partial or Full)) 2 (No. of Courses)
8. Heads: (a) Matl. SA240 TP 304 (Spec. No., Grade) (b) Matl. SA516-70 (Spec. No., Grade)

Location (Top, Bottom, Ends)	Minimum Thickness	Corrosion Allowance	Crown Radius	Knuckle Radius	Elliptical Ratio	Conical Apex Angle	Hemispherical Radius	Flat Diameter	Side to Pressure (Convex or Concave)
Bottom	5/8	---	---	---	6:1	---	---	---	Concave
(b) Top	1 1/8	---	---	---	---	---	---	208	---

9. If removable, bolts used (describe other fastenings) 104 - 1 1/4Ø Stud Bolts SA193-B7 (Matl. Spec. No., Gr., Size No.)
10. Type of Jacket --- Proof Test ---
    Jacket Closure (Describe as ogee & weld, bar, etc.) If bar, give dimensions ---, If bolted, describe or sketch.
11. MAWP 16 psi at max. temp. 100 °F. Min. temp. (when less than -20° F) -325 °F.
    Hydro., ~~XXXXXXX~~ test press. 24 psi.

Items 12 and 13 to be completed for tube sections

12. Tubesheets: --- (Stationary Matl. (Spec. No., Gr.)) (Diam. (in.) (Subject to pressure)) (Nom. Thk. (in.)) (Corr. Allow. (in.)) (Attach (Welded, Bolted))
    (Floating Matl. (Spec. No., Gr.)) (Diam. (in.)) (Nom. Thk. (in.)) (Corr. Allow. (in.)) (Attach)
13. Tubes: --- (Matl. (Spec. No., Gr.)) (O.D. (in.)) (Nom. Thk. (in. or Gauge)) (Number) (Type (Straight or "U"))

Items 14-17 incl. to be completed for inner chambers of jacketed vessels or channels of heat exchangers

14. Shell: --- (Mat'l (Spec. No., Grade)) (Nom. Thk. (in.)) (Corr. Allow. (in.)) (Diam. I.D. (ft & in.)) (Length (Overall) (ft & in.))
15. Seams: --- (Long. (Dbl., Sngl.)) (R.T. (Spot or Full)) (Eff. (%)) (N.T. Temp. (°F))
    (Time) (Circ. (Dbl., Sngl.)) (R.T. (Spot, Partial or Full)) (No. of Courses)
16. Heads: (a) Matl. --- (Spec. No., Grade) (b) Matl. --- (Spec. No., Grade)

	Location (Top, Bottom, Ends)	Minimum Thickness	Corrosion Allowance	Crown Radius	Knuckle Radius	Elliptical Ratio	Conical Apex Angle	Hemispherical Radius	Flat Diameter	Side to Pressure (Convex or Concave)
(a)										
(b)										

    If removable, bolts used (describe other fastenings) --- (Matl. Spec. No., Gr., Size No.)
17. MAWP --- psi at max. temp. --- °F. Min. temp. (when less than -20° F) --- °F.
    Hydro., pneu., or comb. test press. --- psi.

Reproduced from the Order Dept., ASME, 345 E. 47th St., New York, N.Y. 10017

Form U-1 (Back)

18. Nozzles, Inspection and Safety Valve Openings:

Purpose (Size, Quality, Drawing, etc.)	No.	Diameter or Size	Type	Material	Nominal Thk.	Flange Material	Flange Attached	Location
Rupture Disc	1	6	Flg	SA 312 TP 304	.322	SA516-70	Welded	Top
2 Recond.	2	14	Stub	SA 312 TP 304	.375	SA516-70	Welded	Top
Vent & Fill	2	1 & 3/4	Stub	SA 312 TP 304	.154	---	Welded	Top
Pump Out	1	3	Flg	SA 312 TP 304	.216	---	Welded	Top
Feed Thru	7.1	10 & 3	Flg	SA106-B	365,216	SA516-70	Welded	Top
Hatch Mtg	30	8	Flg	SA106-B	.322	---	Welded	Shell
Liquid Fill	1	3	Stub	SA 312 TP 304	.300	---	Welded	Shell
Press Relief	1	6	Flg	SA 312 TP 304	.322	SA516-70	Welded	Top
Access Port	1	24	Flg	SA106-B	.375	SA516-70	Welded	Top

19. Supports: Skirt No (Yes or No) Lugs 4 (No.) Legs --- (No.) Other --- (Describe) Attached --- (Where and how)

20. Remarks: Manufacturer's Partial Data Reports properly identified and signed by Commissioned Inspectors have been furnished for the following items of the report: (2) N2 Recondensers, Item 10, Weldon Inc. 3381-1 & 2 (Name of part, part number, etc.)

CERTIFICATE OF SHOP COMPLIANCE

We certify that the statements made in this report are correct and that all details of design, material, construction, and workmanship of this vessel conform to the ASME Code for Pressure Vessels, Section VIII, Division 1.

"U" Certificate of Authorization No. 35 expires 4-30, 19 87.

Date 10/4/85 Co. name Chicago Bridge & Iron Co. (Manufacturer) Signed (Representative)

CERTIFICATE OF SHOP INSPECTION

Vessel constructed by Chicago Bridge & Iron Co. at Kankakee Shop

I, the undersigned, holding a valid commission issued by the National Board of Boiler and Pressure Vessel Inspectors and/or the State or Province of Illinois and employed by HSBI & I Co. of _____ have inspected the pressure vessel described in this Manufacturer's Data Report on Oct. 4, 19 85, and state that, to the best of my knowledge and belief, the Manufacturer has constructed this pressure vessel in accordance with ASME Code, Section VIII, Division 1. By signing this certificate neither the Inspector nor his employer makes any warranty, expressed or implied, concerning the pressure vessel described in the Manufacturer's Data Report. Furthermore, neither the Inspector nor his employer shall be liable in any manner for any personal injury or property damage or a loss of any kind arising from or connected with this inspection.

Date 10/4/85 Signed [signature] JR. (Authorized Inspector) Commissions N.B. 9857 IL. 1302 (Nat'l Board, State, Province and No.)

CERTIFICATE OF FIELD ASSEMBLY COMPLIANCE

We certify that the field assembly construction of all parts of this vessel conforms with the requirements of Section VIII, Division 1 of the ASME Boiler and Pressure Vessel Code.

"U" Certificate of Authorization No. 35 expires 4-30, 19 87.

Date 11-5-85 Co. name CHICAGO BRIDGE & IRON Co. (Assembler that certified and constructed field assembly) Signed [signature] (By Representative)

CERTIFICATE OF FIELD ASSEMBLY INSPECTION

I, the undersigned, holding a valid commission issued by the National Board of Boiler and Pressure Vessel Inspectors and/or the State or Province of ILLINOIS and employed by H.S.B.I. & I. Co. of HARTFORD CT. have compared the statements in this Manufacturer's Data Report with the described pressure vessel and state that parts referred to as data items _____, not included in the state of shop inspection, have been inspected by me and that, to the best of my knowledge and belief, the Manufacturer has constructed and assembled this pressure vessel in accordance with ASME Code, Section VIII, Division 1. The described vessel was inspected and subjected to a hydrostatic test of 33 psi. By signing this certificate neither the Inspector nor his employer makes any warranty, expressed or implied, concerning the pressure vessel described in this Manufacturer's Data Report. Furthermore, neither the Inspector nor his employer shall be liable in any manner for any personal injury or property damage or a loss of any kind arising from or connected with this inspection.

Date 11-5-85 Signed [signature] JR. (Authorized Inspector) Commissions N.B. 9857 IL. 1302 (Nat'l Board (incl. endorsements), State, Prov., and No.)

REV.	DESCRIPTION	DRAWN	DATE
		APPD.	DATE

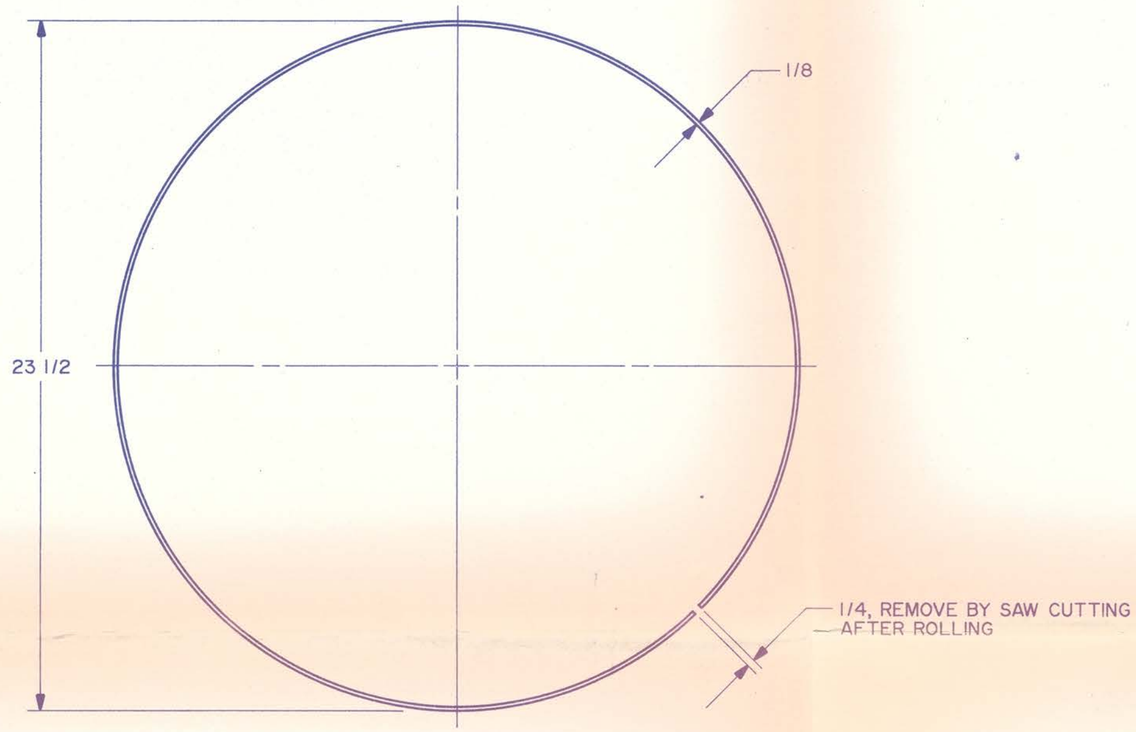

LENGTH BEFORE ROLLING = 73 7/16 (NO GRIP PROVIDED FOR)

JUL 17 1987

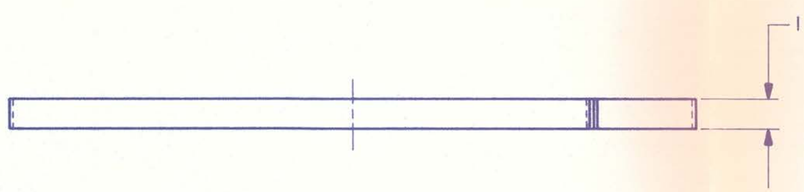

ITEM NO.	PART NO.	DESCRIPTION OR SIZE	QTY. REQ.
		PARTS LIST	

UNLESS OTHERWISE SPECIFIED			ORIGINATOR	CYKO	OCT 86
FRACTIONS	DECIMALS	ANGLES	DRAWN	CYKO	OCT 86
± 1/64	± .005	± 1°	CHECKED	W.L.C. / C.K.	NOV 86
			APPROVED	R. T. Story	NOV 86

1. BREAK ALL SHARP EDGES 1/64 MAX.
2. DO NOT SCALE DWG.
3. DIMENSIONING IN ACCORD WITH ANSI Y14.5 STD's.

125 MAX. ALL MACHINED SURFACES

USED ON 2220.1-MD-193531

MATERIAL- S.S. TYPE 304

FERMI NATIONAL ACCELERATOR LABORATORY
UNITED STATES DEPARTMENT OF ENERGY

E706 LIQUID ARGON CALORIMETER
WELD BACKING RING, 24" SCH. 10 PIPE
LIQUID ARGON FILTER ASSEMBLY

SCALE	FILMED	DRAWING NUMBER	REV.
1/4=1		2220.1-MC-193538	

BRUNING·40·107

REV.	DESCRIPTION	DRAWN	DATE
		APPD.	DATE

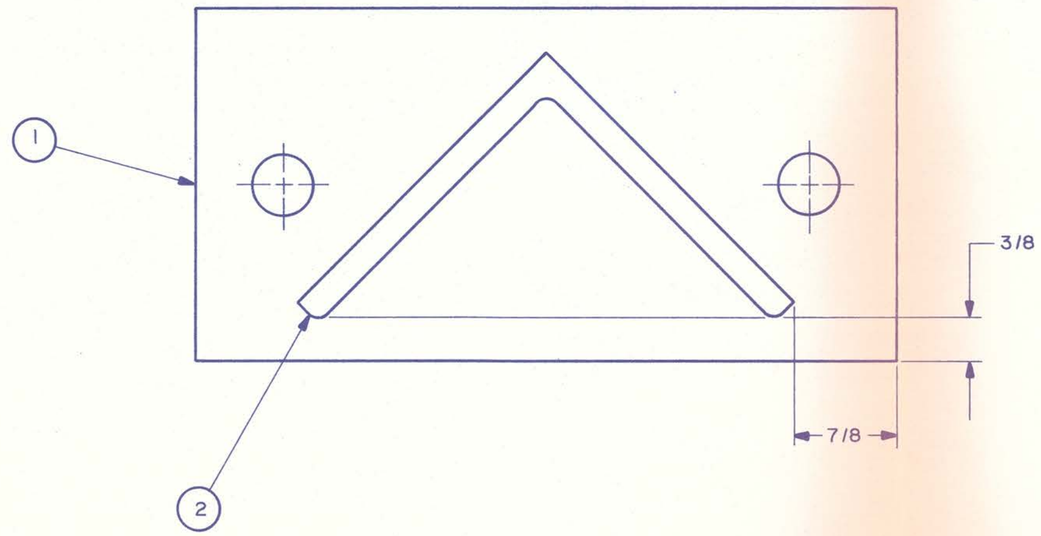

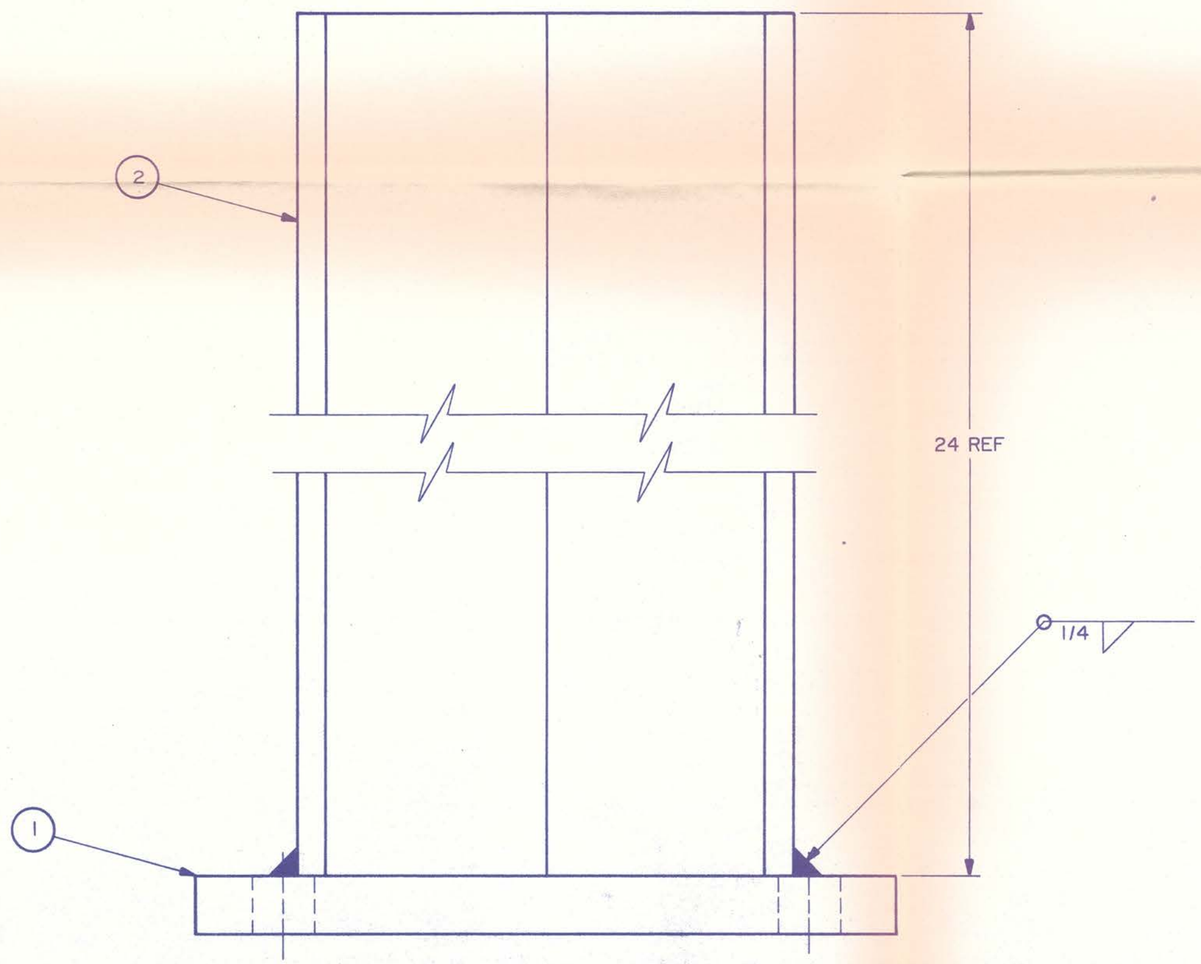

JUL 17 1987

ITEM NO.	PART NO.	DESCRIPTION OR SIZE	QTY. REQ.
2		ANGLE 3 × 3 × 1/4 × 24 LG.,S.S. 304	1
1	MB-193567	FILTER SUPPORT FOOT	1

PARTS LIST

UNLESS OTHERWISE SPECIFIED					
FRACTIONS	DECIMALS	ANGLES	ORIGINATOR	CYKO	OCT 86
± 1/64	± .005	± 1°	DRAWN	CYKO	OCT 86
			CHECKED	W.J.C. / C.H.	NOV 86
			APPROVED	R.T. Story	NOV 86

1. BREAK ALL SHARP EDGES 1/64 MAX.
2. DO NOT SCALE DWG.
3. DIMENSIONING IN ACCORD WITH ANSI Y14.5 STD's.

√ MAX. ALL MACHINED SURFACES

USED ON 2220.1-MD-193531

MATERIAL- SEE BILL OF MAT'L

FERMI NATIONAL ACCELERATOR LABORATORY
UNITED STATES DEPARTMENT OF ENERGY

E706 LIQUID ARGON CALORIMETER
FILTER LEG SUPPORT WELDMENT
LIQUID ARGON FILTER ASSEMBLY

SCALE	FILMED	DRAWING NUMBER	REV.
FULL		2220.1-MC-193537	

BRUNING·40·107

REV.	DESCRIPTION	DRAWN	DATE
		APPD.	DATE

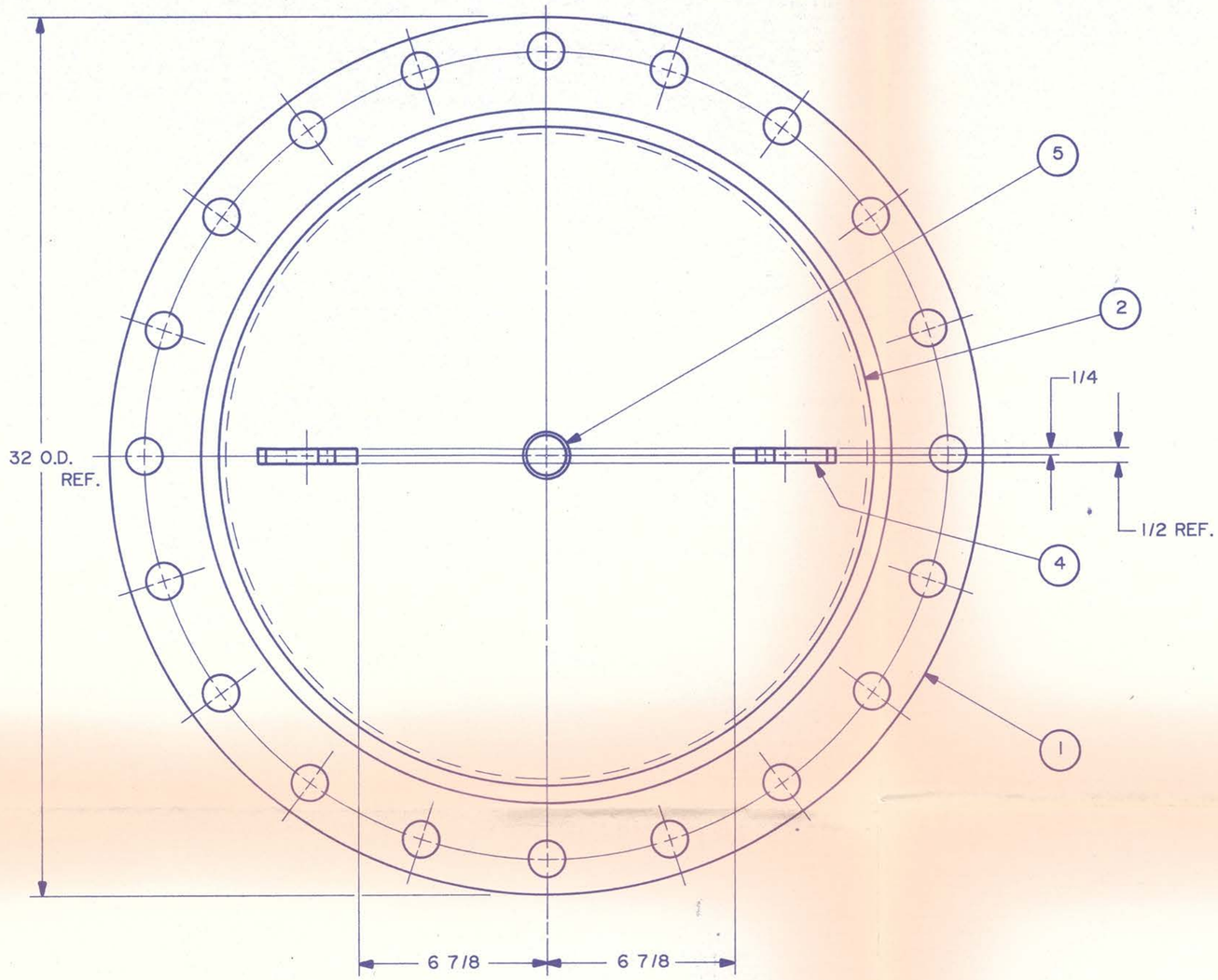

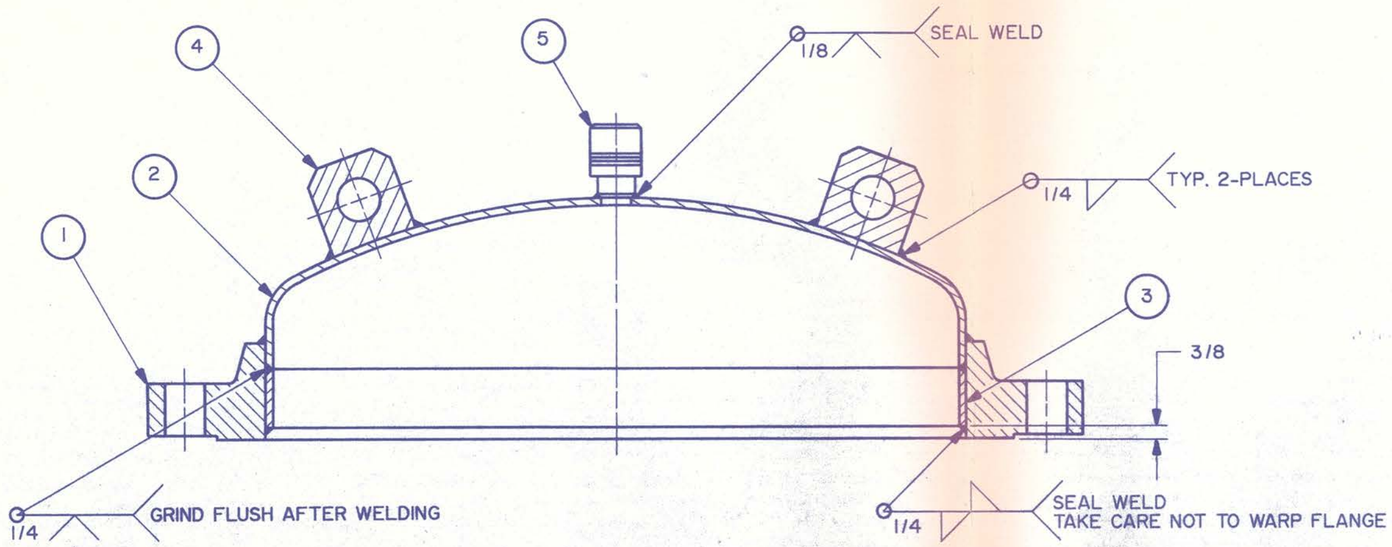

JUL 17 1987

ITEM NO.	PART NO.	DESCRIPTION OR SIZE	QTY. REQ.
5	V-1046-31	C.V.I. VACUUM SEAL-OFF VALVE	1
4	MB-193566	LIFTING LUG, VACUUM HEAD	2
3	MC-193539	24" FLANGE EXTENDER	1
2	MC-193542	FILTER VACUUM HEAD, TOP	1
1	MC-193544	24" FIN. MACH. FLANGE	1

PARTS LIST

UNLESS OTHERWISE SPECIFIED			ORIGINATOR	CYKO	OCT 86
FRACTIONS	DECIMALS	ANGLES	DRAWN	CYKO	OCT 86
± 1/64	± .005	± 1°	CHECKED	W.J.C. / C.H.	NOV 86
			APPROVED	S.T. Story	NOV 86

1. BREAK ALL SHARP EDGES 1/64 MAX.
2. DO NOT SCALE DWG.
3. DIMENSIONING IN ACCORD WITH ANSI Y14.5 STD's.

√ MAX. ALL MACHINED SURFACES

USED ON 2220.1-MD-193530

MATERIAL- SEE BILL OF MAT'L

FERMI NATIONAL ACCELERATOR LABORATORY
UNITED STATES DEPARTMENT OF ENERGY

E706 LIQUID ARGON CALORIMETER
FILTER VACUUM HEAD WELDMENT
LIQUID ARGON FILTER ASSEMBLY

SCALE	FILMED	DRAWING NUMBER	REV.
1/4 = 1		2220.1-MC-193536	

BRUNING·40·107

REV.	DESCRIPTION	DRAWN / APPD.	DATE / DATE
A	ADDED SUFFIX "J" TO HYSPAN P/N	CYKO	2-6-87

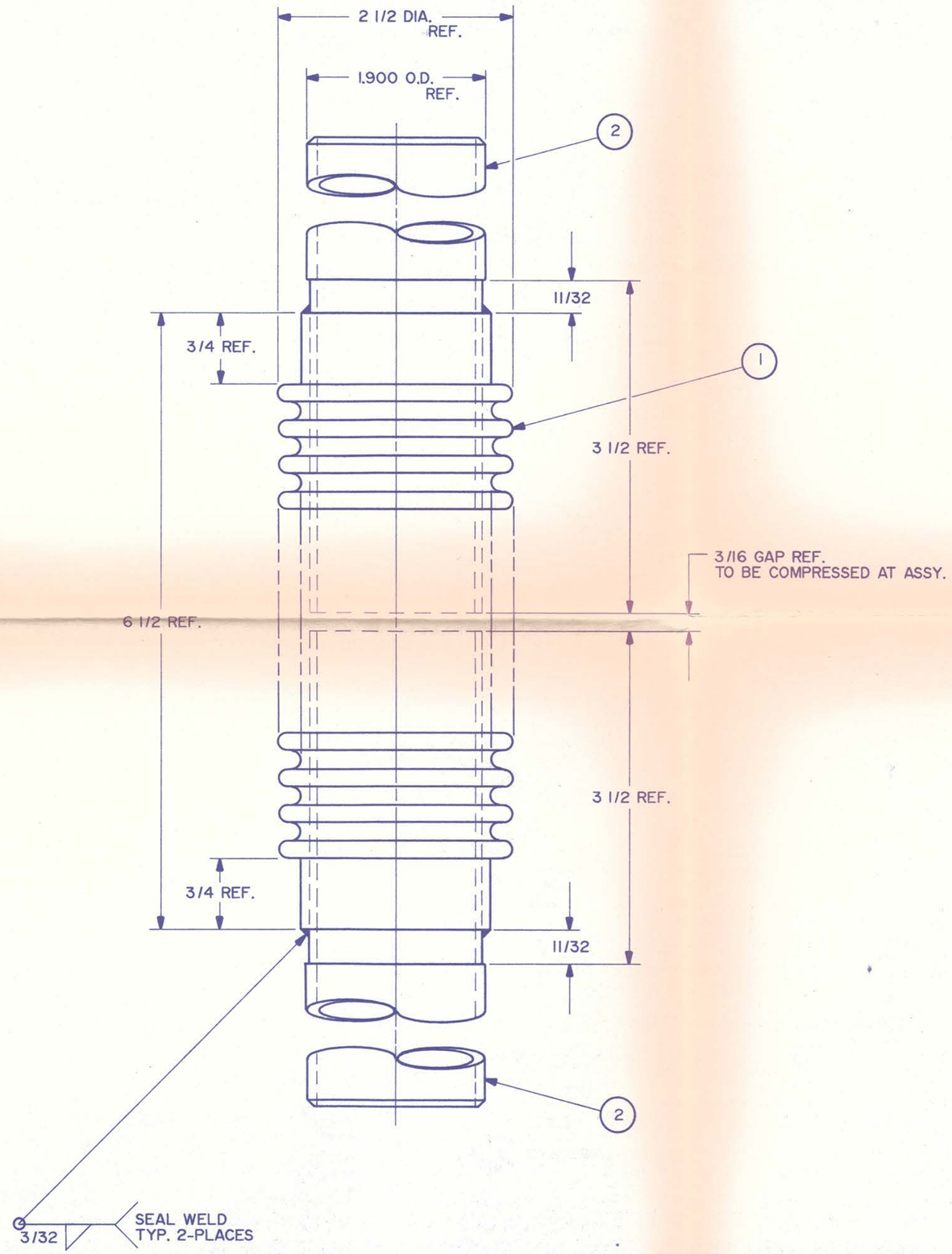

MAX. WORKING PRESSURE = 177 PSIG

	2	MB-193554-3	BELLOWS PIPE, FILTER OUTLET	2
A	1	7527J-5.0-.75	BELLOWS, HYSPAN	1
	SUFFIX NO. -3			

	2	MB-193554-2	BELLOWS PIPE, FILTER INLET	2
A	1	7527J-5.0-.75	BELLOWS, HYSPAN	1
	SUFFIX NO. -2			

JUL 17 1987

	2	MB-193554-1	BELLOWS PIPE, FILTER OUTLET	2
A	1	7527J-5.0-.75	BELLOWS, HYSPAN	1
	SUFFIX NO. -1			

ITEM NO.	PART NO.	DESCRIPTION OR SIZE	QTY. REQ.

PARTS LIST

UNLESS OTHERWISE SPECIFIED			ORIGINATOR	CYKO	OCT 86
FRACTIONS	DECIMALS	ANGLES	DRAWN	CYKO	OCT 86
± 1/64	± .005	± 1°	CHECKED	W.J.C./C.H.	NOV 86
			APPROVED	R.T. Stoy	NOV 86

1. BREAK ALL SHARP EDGES 1/64 MAX.
2. DO NOT SCALE DWG.
3. DIMENSIONING IN ACCORD WITH ANSI Y14.5 STD's.

√ MAX. ALL MACHINED SURFACES

USED ON 2220.1-MD-193530

MATERIAL- SEE BILL OF MAT'L

FERMI NATIONAL ACCELERATOR LABORATORY
UNITED STATES DEPARTMENT OF ENERGY

E706 LIQUID ARGON CALORIMETER
BELLOWS & BELLOWS PIPE WELDMENT
LIQUID ARGON FILTER ASSEMBLY

SCALE	FILMED	DRAWING NUMBER	REV.
FULL		2220.1-MC-193535	A

BRUNING·40·107

REV.	DESCRIPTION	DRAWN	DATE
		APPD.	DATE

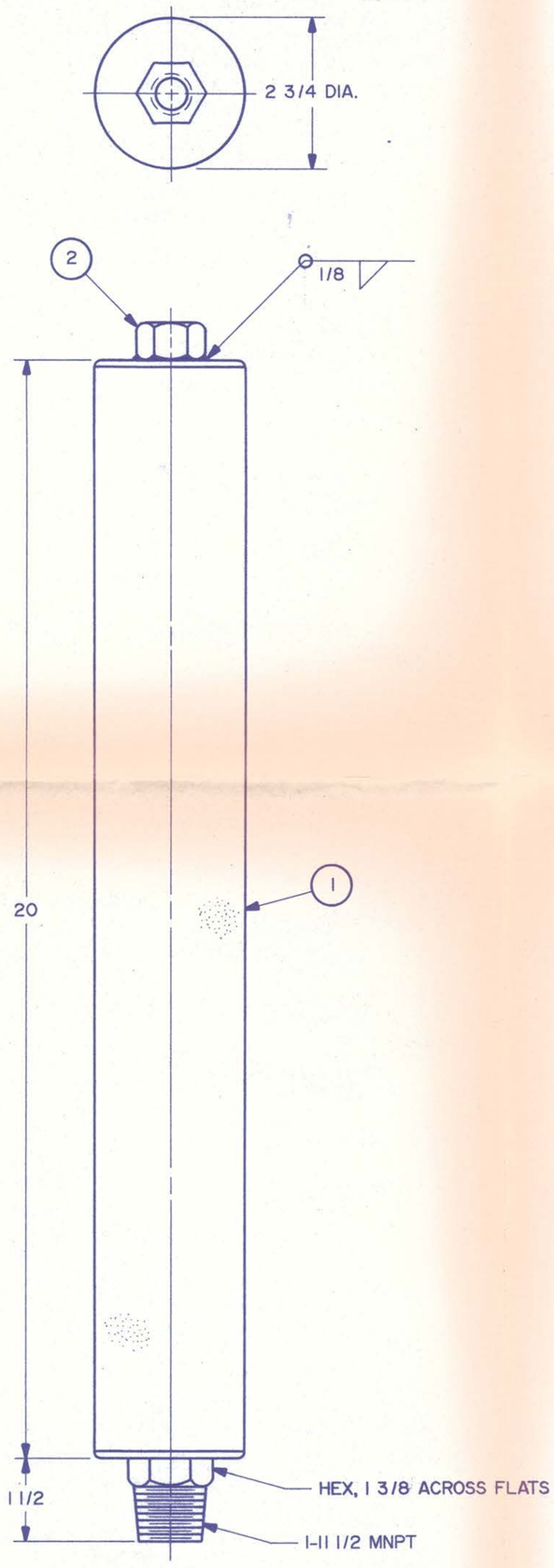

JUL 17 1987

ITEM NO.	PART NO.	DESCRIPTION OR SIZE	QTY. REQ.
2	————	HEX NUT, 3/4-10 UNC, S.S. 304	1
1	2244-A16-20-A00-10-AB	MOTT SINTERED METAL FILTER 300 SERIES S.S. 10 μ	1

PARTS LIST

UNLESS OTHERWISE SPECIFIED			ORIGINATOR	CYKO	OCT 86
FRACTIONS	DECIMALS	ANGLES	DRAWN	CYKO	OCT 86
± 1/64	± .005	± 1°	CHECKED	W.J.C. / C.M.	Nov 86
			APPROVED	R.T. Stay	Nov 86

1. BREAK ALL SHARP EDGES 1/64 MAX.
2. DO NOT SCALE DWG.
3. DIMENSIONING IN ACCORD WITH ANSI Y14.5 STD's.

√ MAX. ALL MACHINED SURFACES

USED ON 2220.1-MD-193530

MATERIAL- SEE BILL OF MAT'L

FERMI NATIONAL ACCELERATOR LABORATORY
UNITED STATES DEPARTMENT OF ENERGY

E706 LIQUID ARGON CALORIMETER
FILTER ASSEMBLY
LIQUID ARGON FILTER ASSEMBLY

SCALE	FILMED	DRAWING NUMBER	REV.
1/2 = 1		2220.1-MC-193534	

BRUNING-40-107

REV.	DESCRIPTION	DRAWN	DATE
		APPD.	DATE

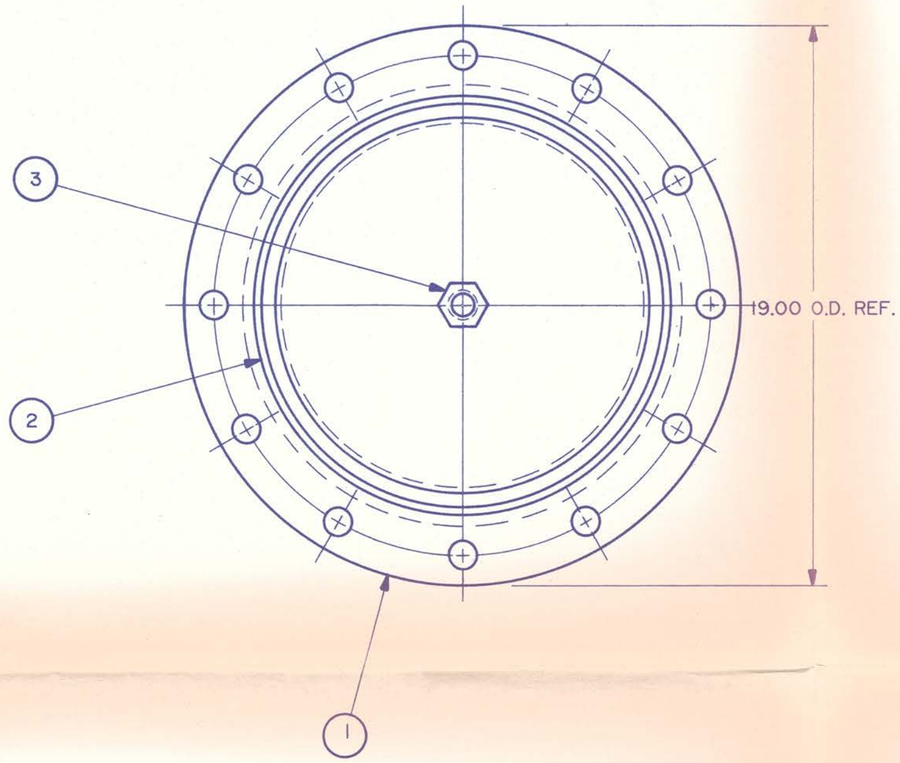

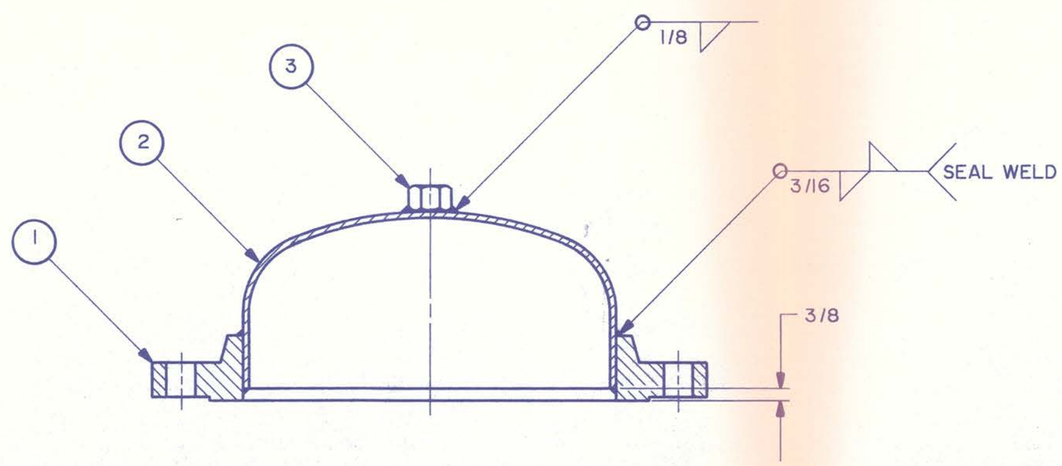

JUL 17 1987

ITEM NO.	PART NO.	DESCRIPTION OR SIZE	QTY. REQ.
3	———	HEX NUT, 1-8 UNC, S.S. 304	1
2	———	12" SCH. 10 PIPE CAP, S.S. 304	1
1	MC-193547	12" FIN.MACH. FLANGE	1

PARTS LIST

UNLESS OTHERWISE SPECIFIED					
FRACTIONS	DECIMALS	ANGLES	ORIGINATOR	CYKO	OCT 86
± 1/64	± .005	± 1°	DRAWN	CYKO	OCT 86
			CHECKED	W.J.C. / C.J.	Nov 86
			APPROVED	S.T.S.	NOV 86

1. BREAK ALL SHARP EDGES 1/64 MAX.
2. DO NOT SCALE DWG.
3. DIMENSIONING IN ACCORD WITH ANSI Y14.5 STD's.

√ MAX. ALL MACHINED SURFACES

USED ON 2220.1-MD-193530

MATERIAL- SEE BILL OF MAT'L

FERMI NATIONAL ACCELERATOR LABORATORY
UNITED STATES DEPARTMENT OF ENERGY

E706 LIQUID ARGON CALORIMETER
CAP & FLANGE WELDMENT
LIQUID ARGON FILTER ASSEMBLY

SCALE	FILMED	DRAWING NUMBER	REV.
1/4 = 1		2220.1-MC-193533	

BRUNING·40·107

REV.	DESCRIPTION	DRAWN	DATE
		APPD.	DATE

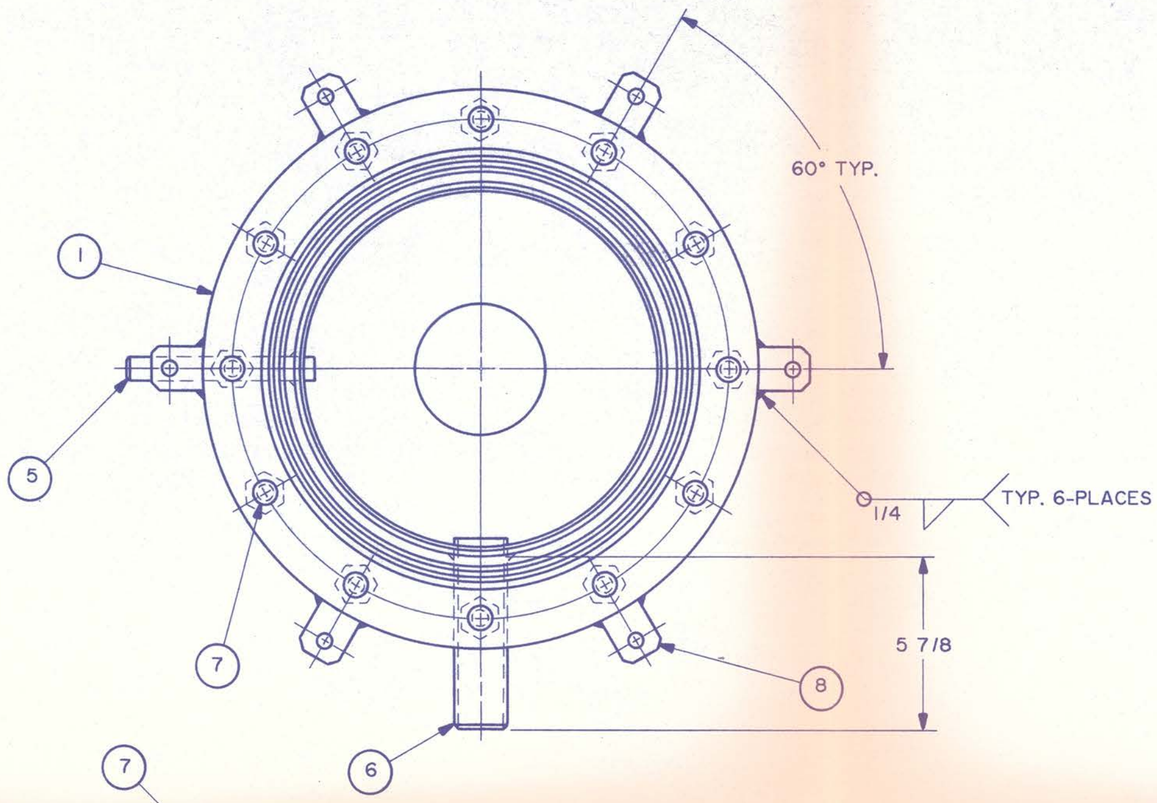

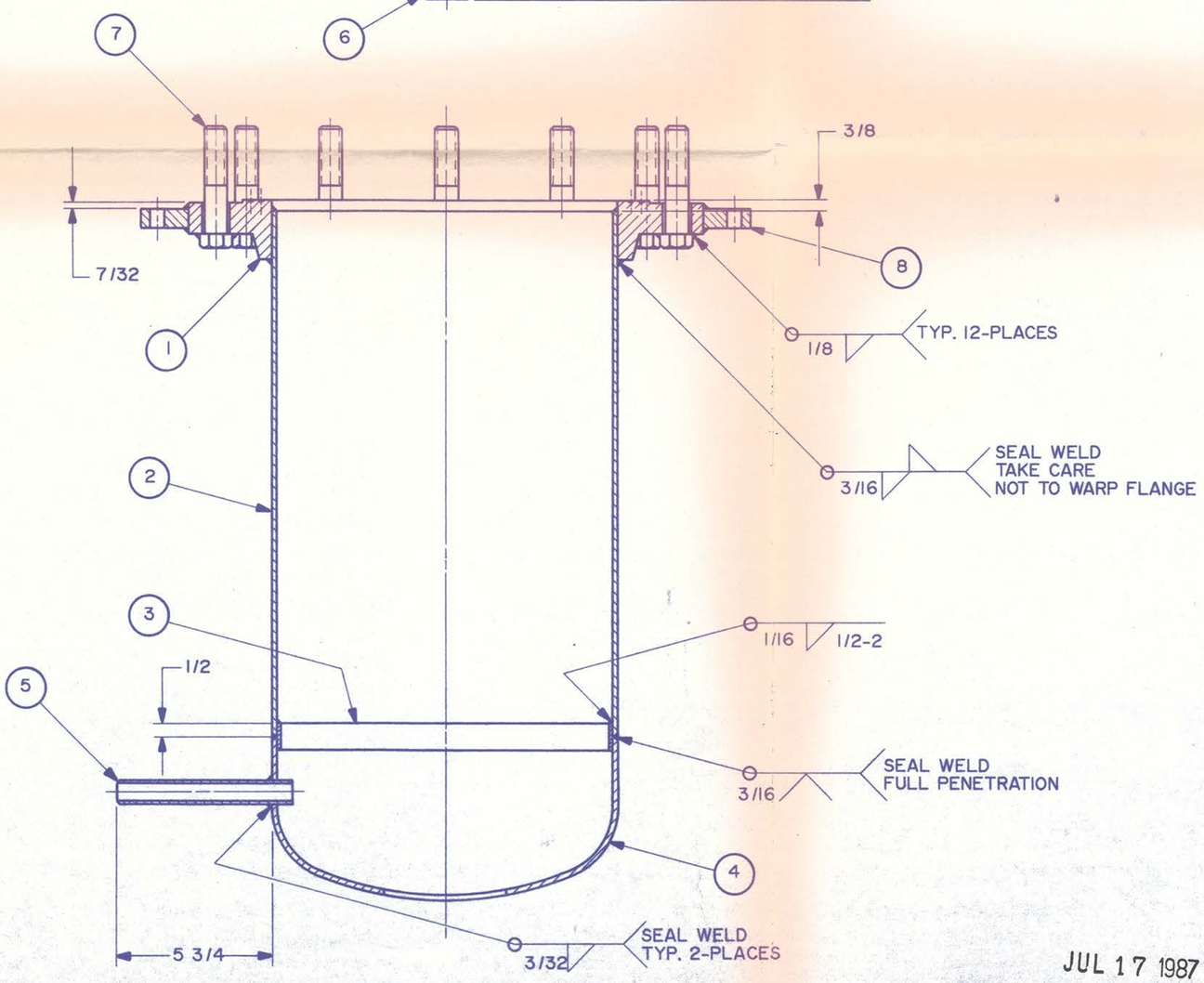

JUL 17 1987

ITEM NO.	PART NO.	DESCRIPTION OR SIZE	QTY. REQ.
8	MB-193556	FILTER SUPPORT LUG	6
7	———	HEX HD. BOLT, 7/8-9 UNC × 4 LG. S.S. TYPE 304	12
6	MB-193584	PIPE STUB (INLET) 6 1/2 LG.	1
5	MB-193581-2	PIPE STUB (RELIEF) 6 1/2 LG.	1
4	MC-193546	12" FIN. MACH. PIPE CAP	1
3	MB-193570	WELD BACKING RING, 12" SCH. 10 PIPE	1
2	MC-193545	FILTER BODY SHELL	1
1	MC-193548	12" FIN. MACH. FLANGE W/INDIUM GROOVES	1

PARTS LIST

UNLESS OTHERWISE SPECIFIED			ORIGINATOR	CYKO	OCT 86
FRACTIONS	DECIMALS	ANGLES	DRAWN	CYKO	OCT 86
± 1/64	± .005	± 1°	CHECKED	W.L.C. / C.H.	Nov 86
			APPROVED	S.T. Kay	NOV 86

1. BREAK ALL SHARP EDGES 1/64 MAX.
2. DO NOT SCALE DWG.
3. DIMENSIONING IN ACCORD WITH ANSI Y14.5 STD's.

√ MAX. ALL MACHINED SURFACES

USED ON 2220.1-MD-193530

MATERIAL- SEE BILL OF MAT'L

FERMI NATIONAL ACCELERATOR LABORATORY
UNITED STATES DEPARTMENT OF ENERGY

E706 LIQUID ARGON CALORIMETER
FILTER PRESSURE VESSEL & FLANGE WELDMENT
LIQUID ARGON FILTER ASSEMBLY

SCALE	FILMED	DRAWING NUMBER	REV.
1/4 = 1		2220.1-MC-193532	

BRUNING-40-107

REV.	DESCRIPTION	DRAWN	DATE
		APPD.	DATE

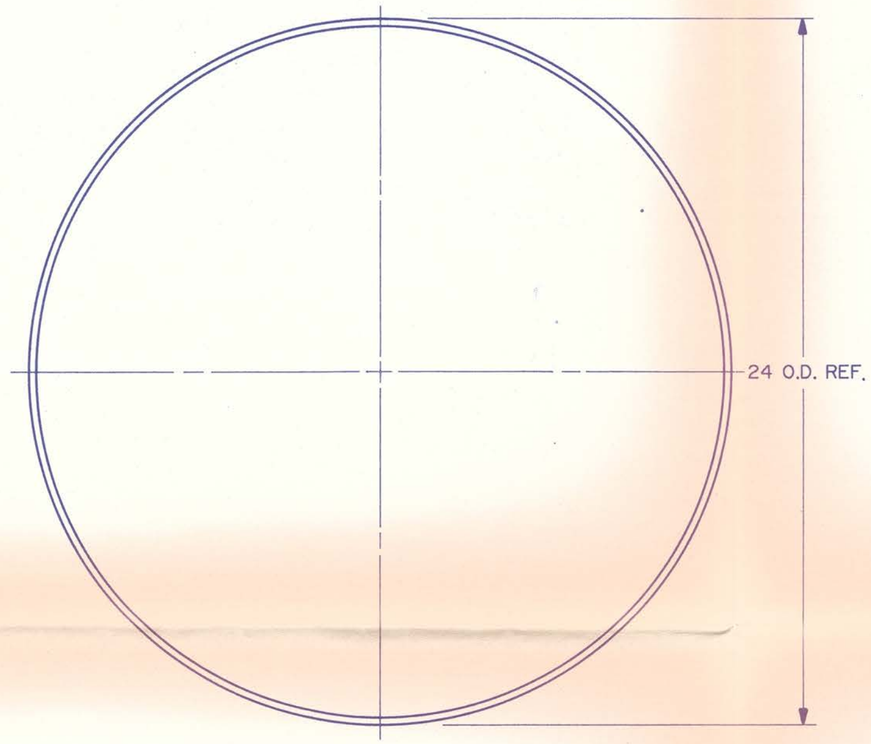

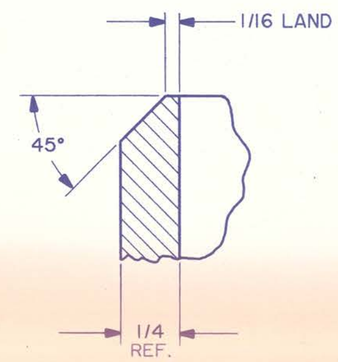

DETAIL A
SCALE 2 = 1

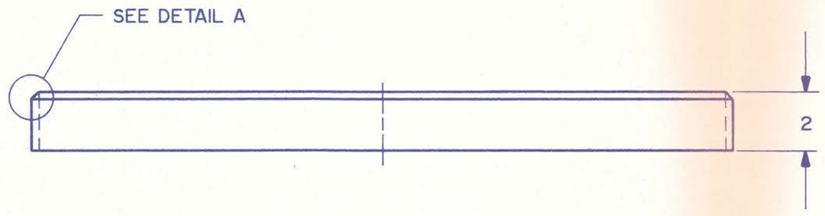

JUL 17 1987

ITEM NO.	PART NO.	DESCRIPTION OR SIZE	QTY. REQ.
		PARTS LIST	

UNLESS OTHERWISE SPECIFIED			ORIGINATOR	CYKO	OCT 86
FRACTIONS	DECIMALS	ANGLES	DRAWN	CYKO	OCT 86
± 1/64	± .005	± 1°	CHECKED	W.J.C. / C.X.	Nov 86
			APPROVED	S. T. Stoy	Nov 86

1. BREAK ALL SHARP EDGES 1/64 MAX.
2. DO NOT SCALE DWG.
3. DIMENSIONING IN ACCORD WITH ANSI Y14.5 STD's.

125√ MAX. ALL MACHINED SURFACES

USED ON 2220.1-MC-193536

MATERIAL- PIPE, 24" SCH. 10 (.250 WALL) S.S. TYPE 304

FERMI NATIONAL ACCELERATOR LABORATORY
UNITED STATES DEPARTMENT OF ENERGY

E706 LIQUID ARGON CALORIMETER
24" FLANGE EXTENDER
LIQUID ARGON FILTER ASSEMBLY

SCALE	FILMED	DRAWING NUMBER	REV.
1/4 = 1		2220.1-MC-193539	

BRUNING·40·107

REV.	DESCRIPTION	DRAWN	DATE
		APPD.	DATE
A	ADDED BORED HOLE	CYKO	12-15-86

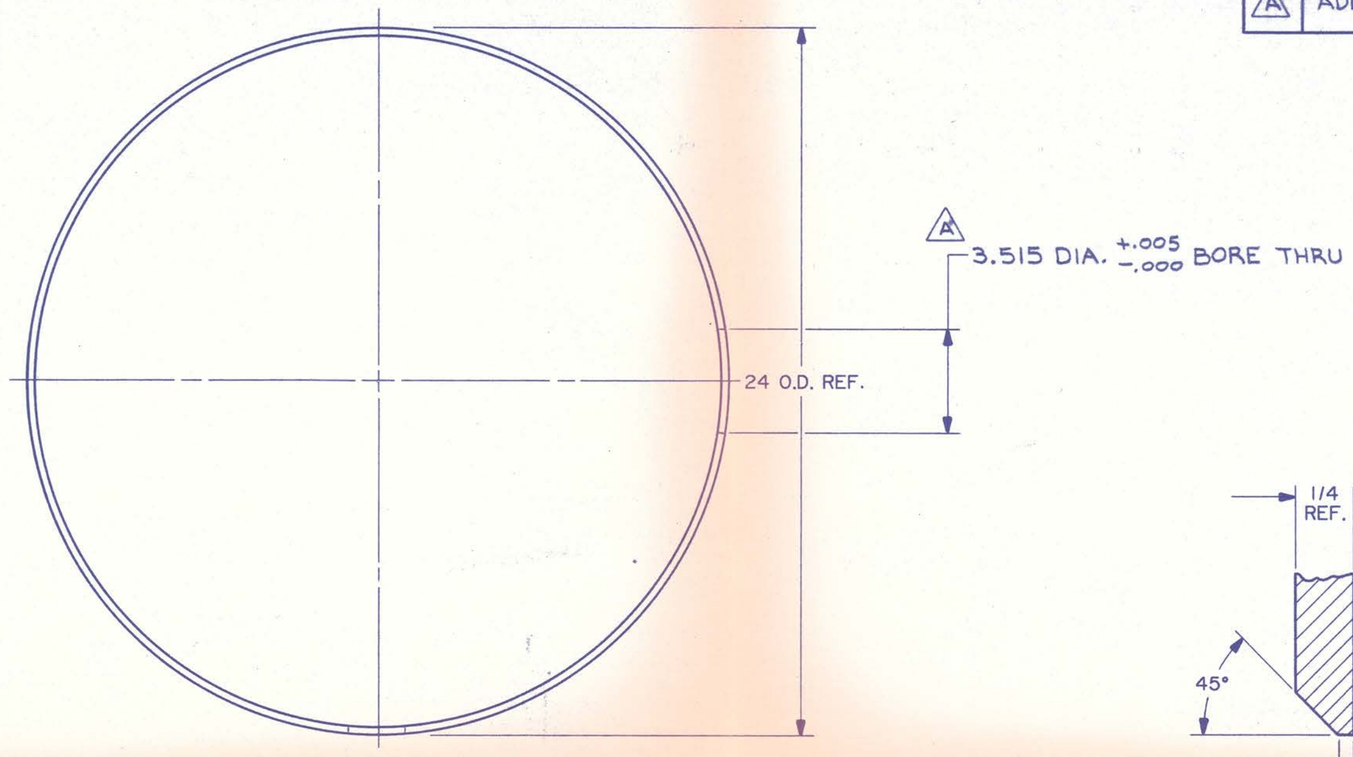

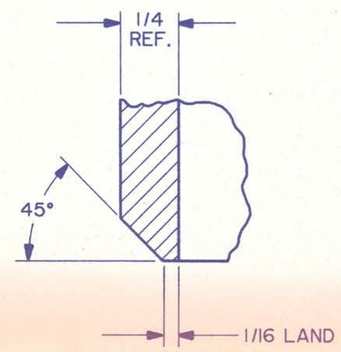

DETAIL A
SCALE: 2 = 1

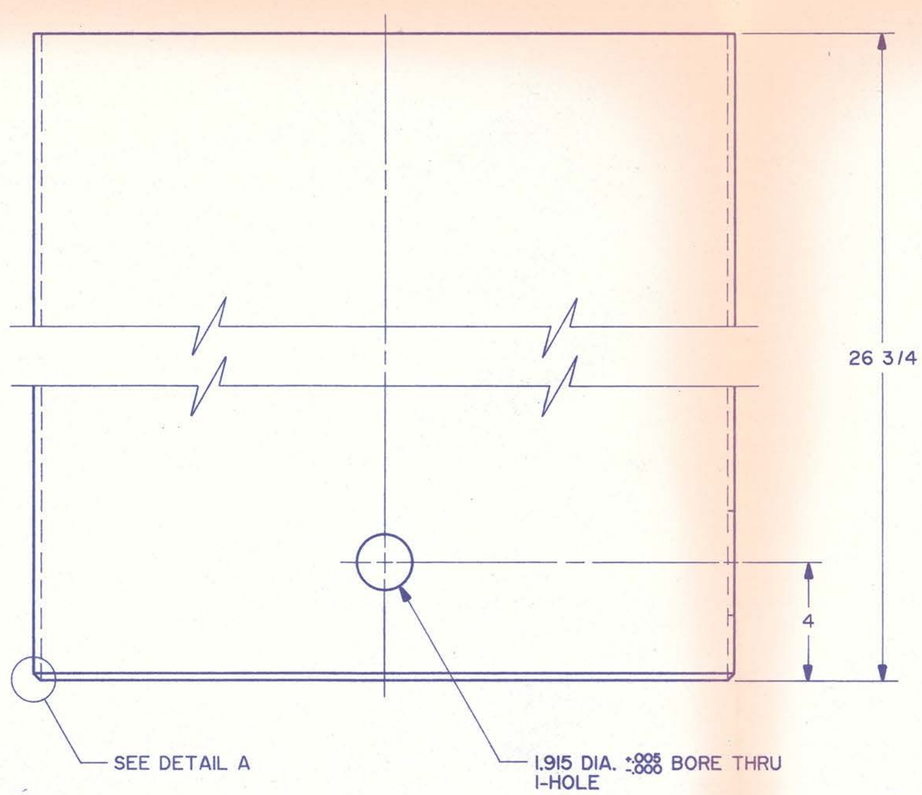

JUL 17 1987

ITEM NO.	PART NO.	DESCRIPTION OR SIZE	QTY. REQ.
PARTS LIST			

UNLESS OTHERWISE SPECIFIED			ORIGINATOR	CYKO	OCT 86
FRACTIONS	DECIMALS	ANGLES	DRAWN	CYKO	OCT 86
± 1/64	± .005	± 1°	CHECKED	W.J.C. / C.R.	Nov 86
1. BREAK ALL SHARP EDGES 1/64 MAX.			APPROVED	R.T. Stong	Nov 86
2. DO NOT SCALE DWG.			USED ON	2220.1-MD-193531	
3. DIMENSIONING IN ACCORD WITH ANSI Y14.5 STD's.			MATERIAL-	PIPE, 24" SCH. 10 (.250 WALL) S.S. TYPE 304	
125 √ MAX. ALL MACHINED SURFACES					

FERMI NATIONAL ACCELERATOR LABORATORY
UNITED STATES DEPARTMENT OF ENERGY

E706 LIQUID ARGON CALORIMETER
FILTER VACUUM SHELL
LIQUID ARGON FILTER ASSEMBLY

SCALE	FILMED	DRAWING NUMBER	REV.
1/4 = 1		2220.1-MC-193540	A

BRUNING·40·107

REV.	DESCRIPTION	DRAWN	DATE
		APPD.	DATE

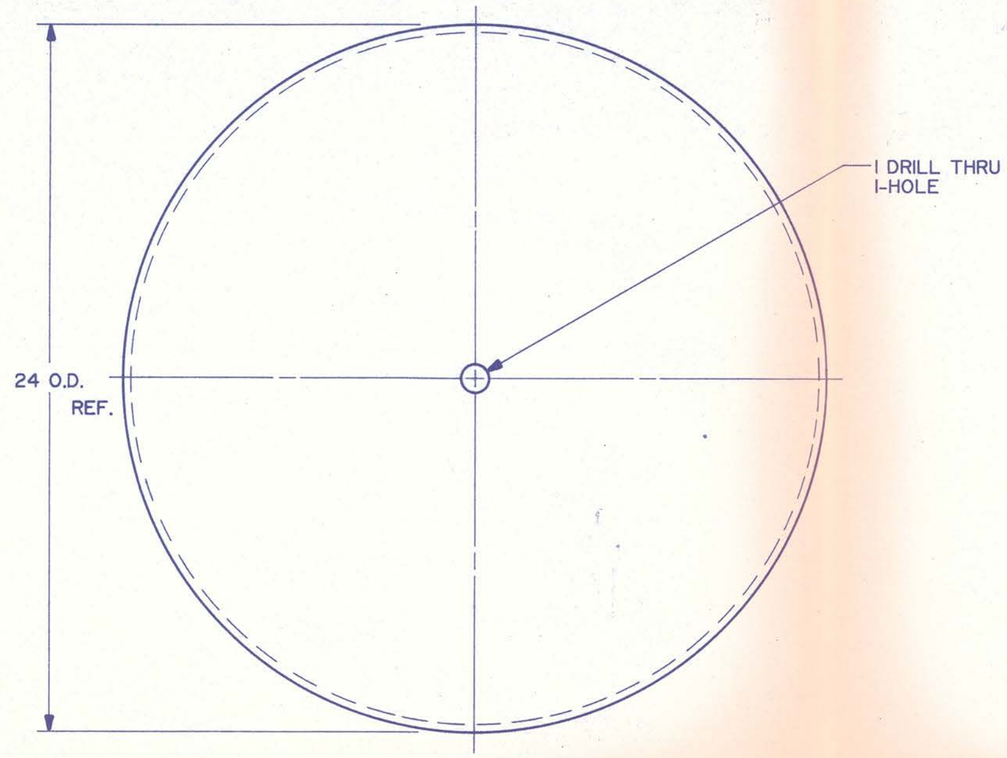

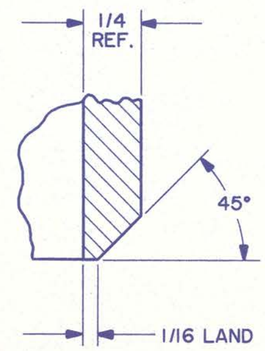

DETAIL A

SCALE: 2 = 1

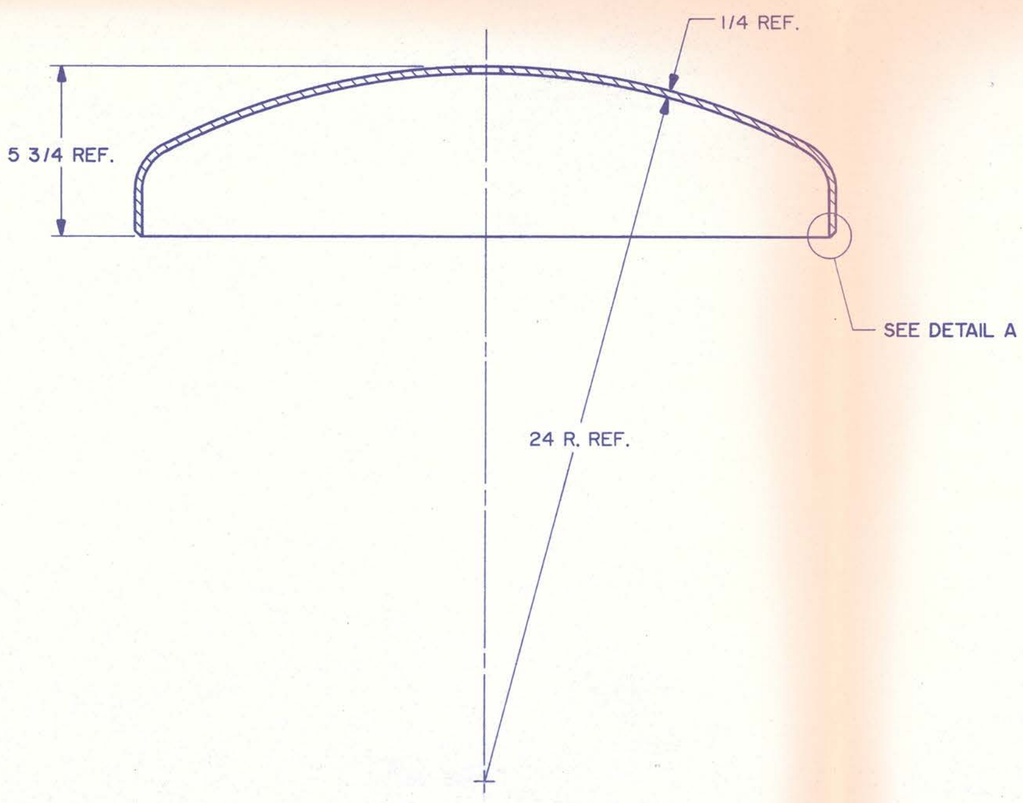

JUL 17 1987

ITEM NO.	PART NO.	DESCRIPTION OR SIZE	QTY. REQ.
PARTS LIST			

UNLESS OTHERWISE SPECIFIED			ORIGINATOR	CYKO	OCT 86
FRACTIONS	DECIMALS	ANGLES	DRAWN	CYKO	OCT 86
± 1/64	± .005	± 1°	CHECKED	W.J.C. / C.H.	NOV 86
			APPROVED	S.T. Stoy	NOV 86

1. BREAK ALL SHARP EDGES 1/64 MAX.
2. DO NOT SCALE DWG.
3. DIMENSIONING IN ACCORD WITH ANSI Y14.5 STD's.

125 √ MAX. ALL MACHINED SURFACES

USED ON 2220.1-MC-193536

MATERIAL- 24" O.D. × 1/4 THK. ASME FLANGED & DISHED HEAD, 1 1/2" S. F. S.S. 304

FERMI NATIONAL ACCELERATOR LABORATORY
UNITED STATES DEPARTMENT OF ENERGY

E706 LIQUID ARGON CALORIMETER
FILTER VACUUM HEAD, TOP
LIQUID ARGON FILTER ASSEMBLY

SCALE	FILMED	DRAWING NUMBER	REV.
1/4 = 1		2220.1-MC-193542	

BRUNING-40-107

REV.	DESCRIPTION	DRAWN	DATE
		APPD.	DATE

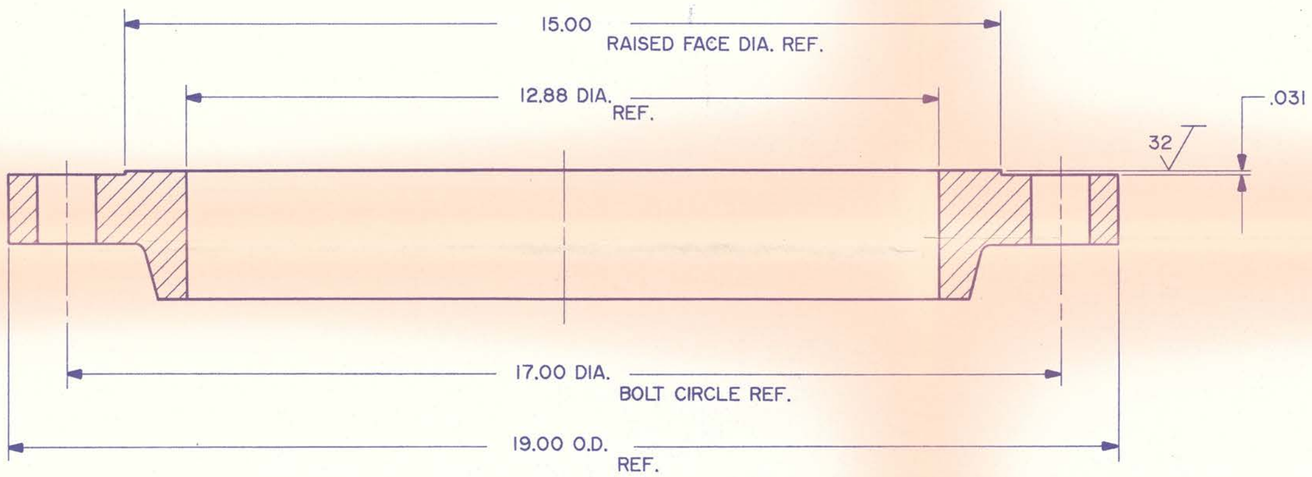

JUL 17 1987

ITEM NO.	PART NO.	DESCRIPTION OR SIZE	QTY. REQ.
		PARTS LIST	

UNLESS OTHERWISE SPECIFIED			ORIGINATOR	CYKO	OCT 86
FRACTIONS	DECIMALS	ANGLES	DRAWN	CYKO	OCT 86
± 1/64	± .005	± 1°	CHECKED	W.J.C. / C.H.	NOV 86
			APPROVED	R.T. Stoy	NOV 86

1. BREAK ALL SHARP EDGES 1/64 MAX.
2. DO NOT SCALE DWG.
3. DIMENSIONING IN ACCORD WITH ANSI Y14.5 STD's.

125 MAX. ALL MACHINED SURFACES

USED ON 2220.1-MC-193533

MATERIAL- 12" CLASS 150 ANSI B16.5 SLIP-ON FLANGE, S.S. 304

FERMI NATIONAL ACCELERATOR LABORATORY
UNITED STATES DEPARTMENT OF ENERGY

E706 LIQUID ARGON CALORIMETER
12" FIN. MACH. FLANGE
LIQUID ARGON FILTER ASSEMBLY

SCALE	FILMED	DRAWING NUMBER	REV.
1/2= 1		2220.1-MC-193547	

BRUNING • 40 • 107

REV.	DESCRIPTION	DRAWN	DATE
		APPD.	DATE
A	REVISED BORE DIA.	CYKO	12-1-86

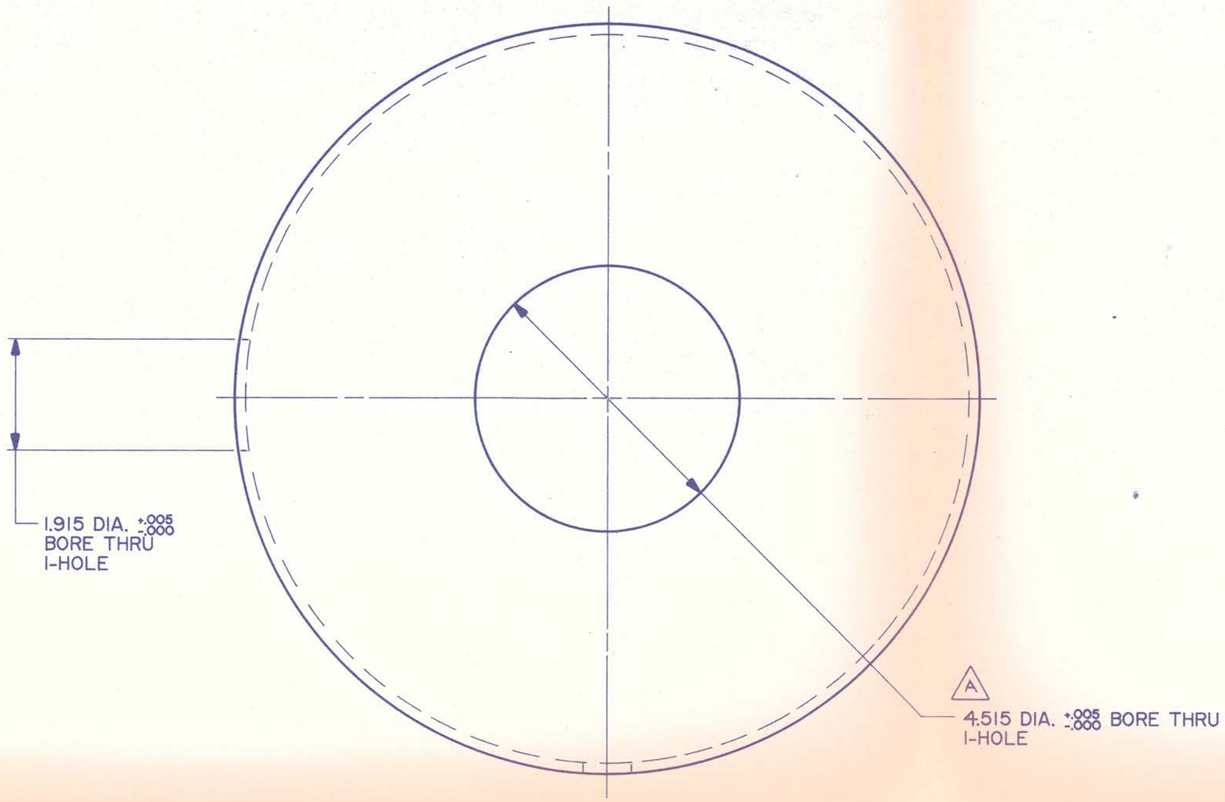

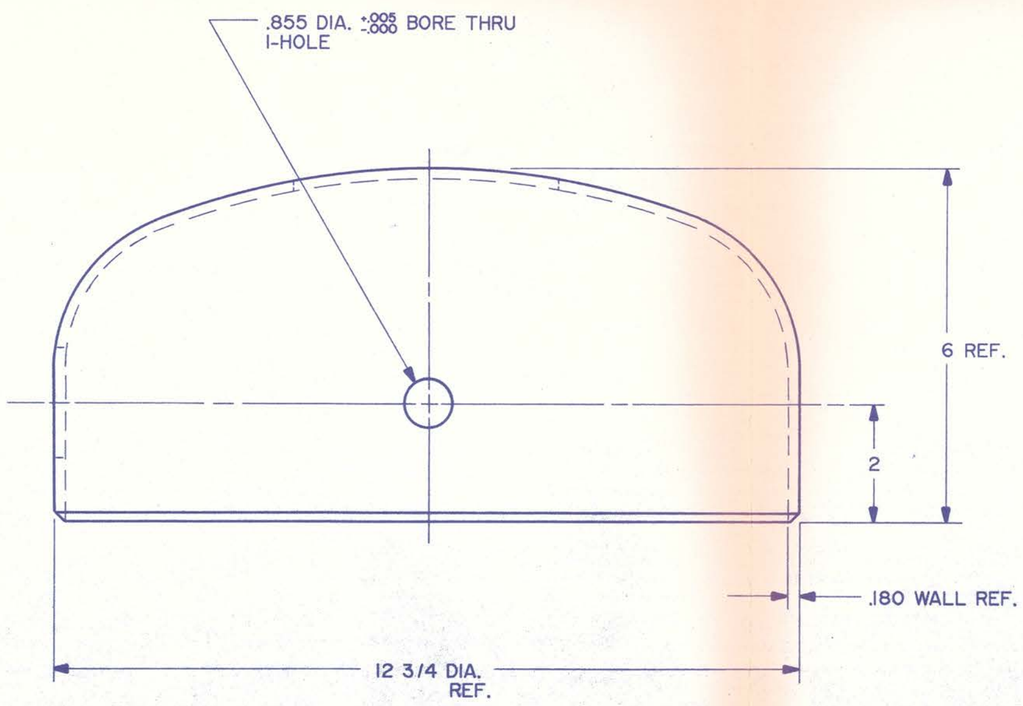

JUL 17 1987

ITEM NO.	PART NO.	DESCRIPTION OR SIZE	QTY. REQ.
PARTS LIST			

UNLESS OTHERWISE SPECIFIED			ORIGINATOR	CYKO	OCT 86
FRACTIONS	DECIMALS	ANGLES	DRAWN	CYKO	OCT 86
± 1/64	± .005	± 1°	CHECKED	W.J.C. / C.H.	Nov 86
			APPROVED	[illegible]	Nov. 86

1. BREAK ALL SHARP EDGES 1/64 MAX.
2. DO NOT SCALE DWG.
3. DIMENSIONING IN ACCORD WITH ANSI Y14.5 STD's.

125 MAX. ALL MACHINED SURFACES

USED ON 2220.1-MD-193532

MATERIAL- 12" SCH. 10 PIPE CAP S.S. TYPE 304

FERMI NATIONAL ACCELERATOR LABORATORY
UNITED STATES DEPARTMENT OF ENERGY

E706 LIQUID ARGON CALORIMETER
12" FIN. MACH. PIPE CAP
LIQUID ARGON FILTER ASSEMBLY

SCALE	FILMED	DRAWING NUMBER	REV.
1/2=1		2220.1-MC-193546	A

BRUNING-40-107

REV.	DESCRIPTION	DRAWN	DATE
		APPD.	DATE

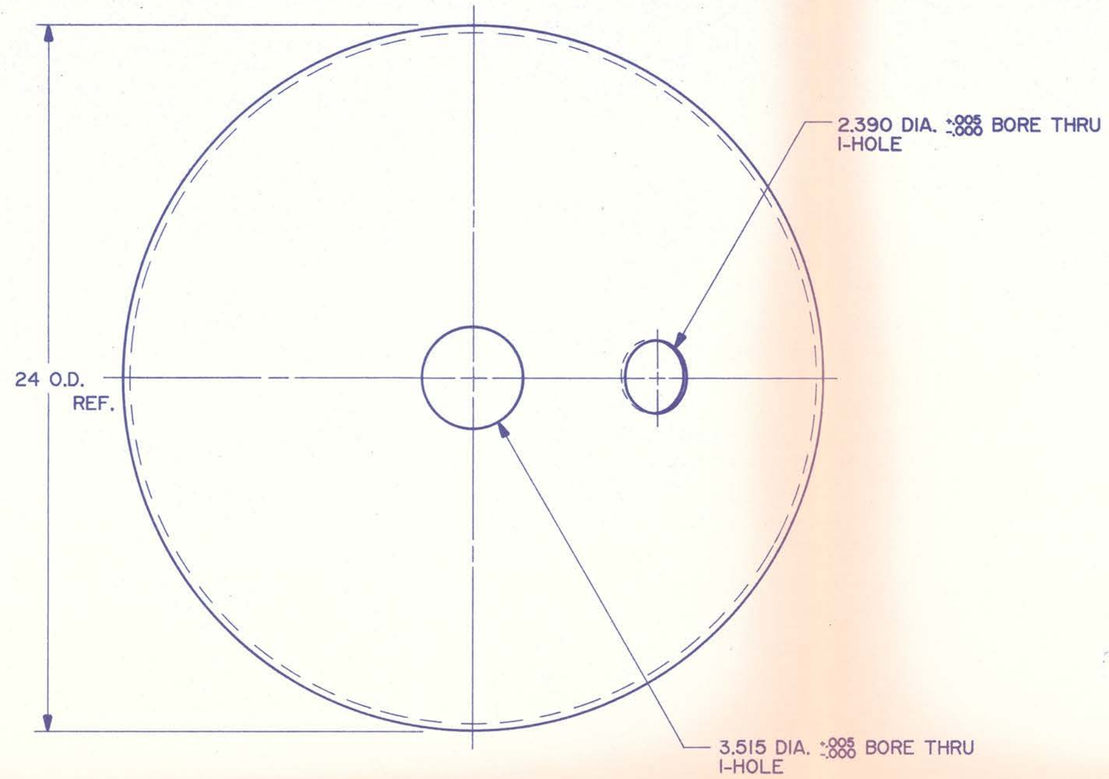

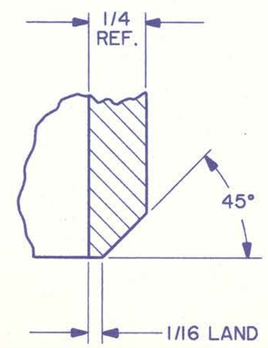

DETAIL A

SCALE: 2 = 1

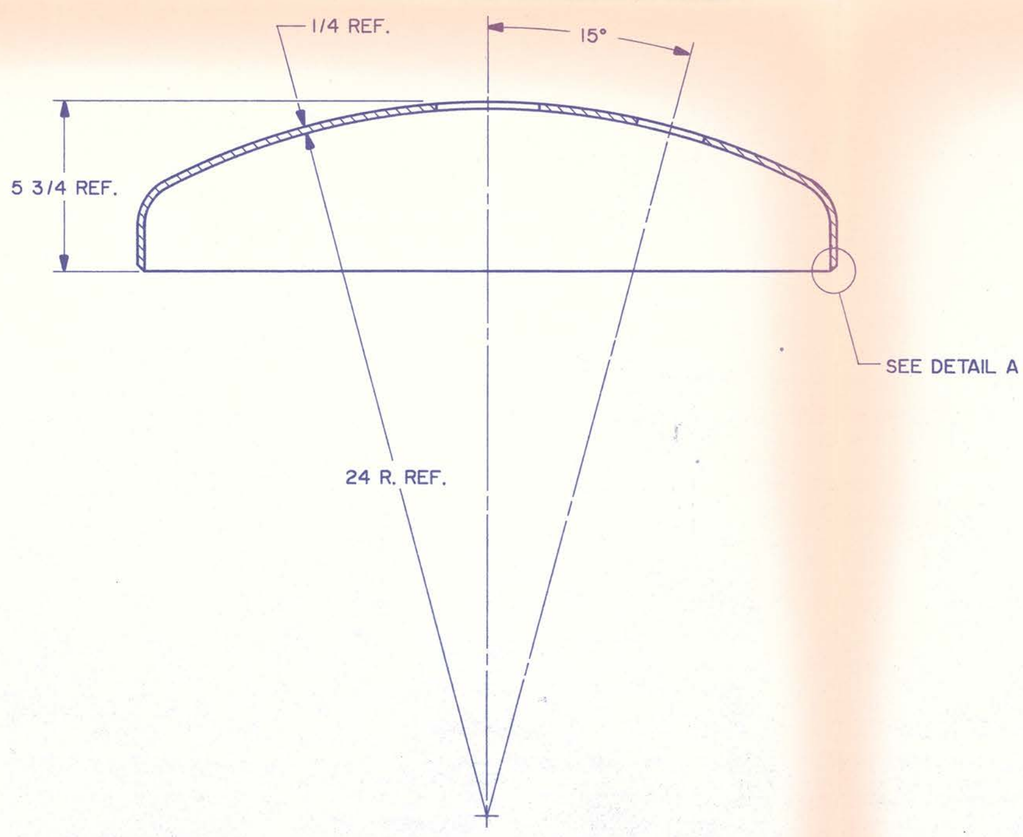

JUL 17 1987

ITEM NO.	PART NO.	DESCRIPTION OR SIZE	QTY. REQ.

PARTS LIST

UNLESS OTHERWISE SPECIFIED			ORIGINATOR	CYKO	OCT 86
FRACTIONS	DECIMALS	ANGLES	DRAWN	CYKO	OCT 86
± 1/64	± .005	± 1°	CHECKED	W.J.C./ C.J.	Nov 86
			APPROVED	R.T. Story	NOV 86

1. BREAK ALL SHARP EDGES 1/64 MAX.
2. DO NOT SCALE DWG.
3. DIMENSIONING IN ACCORD WITH ANSI Y14.5 STD's.

125 MAX. ALL MACHINED SURFACES

USED ON 2220.1-MD-193531

MATERIAL- 24" O.D. × 1/4 THK. ASME FLANGED & DISHED HEAD, 1 1/2" S. F. S.S. 304

FERMI NATIONAL ACCELERATOR LABORATORY
UNITED STATES DEPARTMENT OF ENERGY

E706 LIQUID ARGON CALORIMETER
FILTER VACUUM HEAD, BOTTOM
LIQUID ARGON FILTER ASSEMBLY

SCALE	FILMED	DRAWING NUMBER	REV.
1/4= 1		2220.1-MC-193541	

BRUNING·40·107

REV.	DESCRIPTION	DRAWN	DATE
		APPD.	DATE

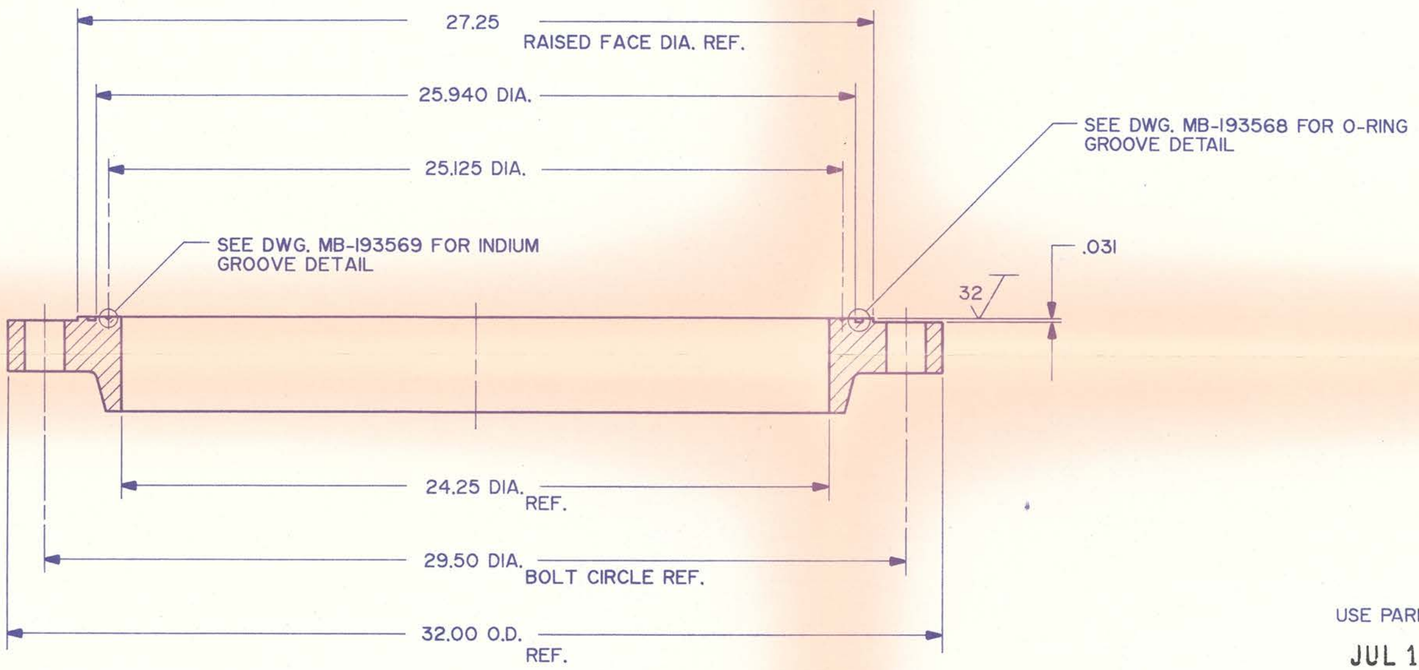

USE PARKER O-RING NO. 2-395

JUL 17 1987

ITEM NO.	PART NO.	DESCRIPTION OR SIZE	QTY. REQ.
		PARTS LIST	

UNLESS OTHERWISE SPECIFIED			ORIGINATOR	CYKO	OCT 86
FRACTIONS	DECIMALS	ANGLES	DRAWN	CYKO	OCT 86
± 1/64	± .005	± 1°	CHECKED	W.J.C. / C.R.	Nov 86
			APPROVED	R.T. Stony	Nov 86

1. BREAK ALL SHARP EDGES 1/64 MAX.
2. DO NOT SCALE DWG.
3. DIMENSIONING IN ACCORD WITH ANSI Y14.5 STD's.

125 √ MAX. ALL MACHINED SURFACES

USED ON 2220.1-MD-193531

MATERIAL- 24" CLASS 150 ANSI B16.5 SLIP-ON FLANGE, S.S. 304

FERMI NATIONAL ACCELERATOR LABORATORY
UNITED STATES DEPARTMENT OF ENERGY

E706 LIQUID ARGON CALORIMETER
24" FIN. MACH. FLANGE/FILTER VACUUM SHELL
LIQUID ARGON FILTER ASSEMBLY

SCALE	FILMED	DRAWING NUMBER	REV.
1/4= 1		2220.1-MC-193543	

BRUNING·40·107

REV.	DESCRIPTION	DRAWN	DATE
		APPD.	DATE

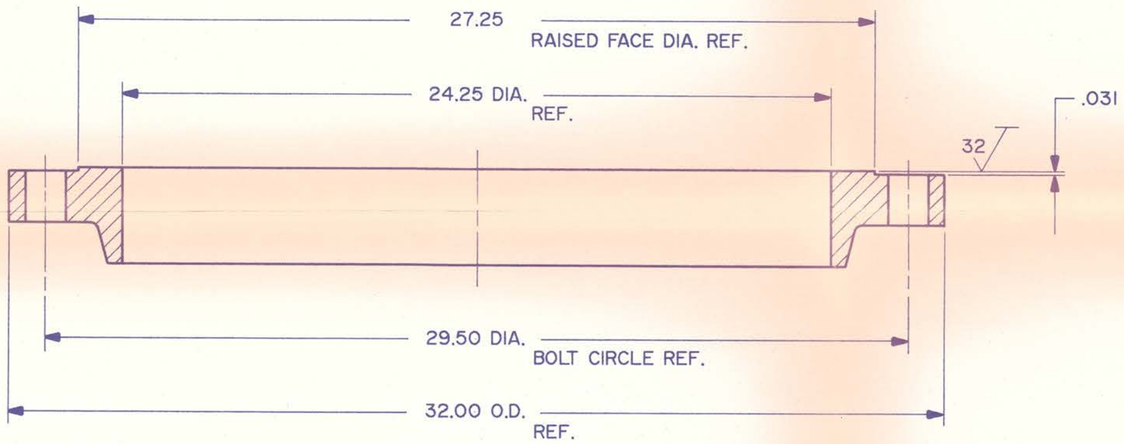

JUL 17 1987

ITEM NO.	PART NO.	DESCRIPTION OR SIZE	QTY. REQ.

PARTS LIST

UNLESS OTHERWISE SPECIFIED			ORIGINATOR	CYKO	OCT 86
FRACTIONS	DECIMALS	ANGLES	DRAWN	CYKO	OCT 86
± 1/64	± .005	± 1°	CHECKED	W.C. / C.H.	NOV 86
			APPROVED	P.T. Story	NOV 86

1. BREAK ALL SHARP EDGES 1/64 MAX.
2. DO NOT SCALE DWG.
3. DIMENSIONING IN ACCORD WITH ANSI Y14.5 STD's.

125 MAX. ALL MACHINED SURFACES

USED ON 2220.1-MC-193536

MATERIAL- 24" CLASS 150 ANSI B16.5 SLIP-ON FLANGE, S.S. 304

FERMI NATIONAL ACCELERATOR LABORATORY
UNITED STATES DEPARTMENT OF ENERGY

E706 LIQUID ARGON CALORIMETER
24" FIN. MACH. FLANGE/FILTER VACUUM HEAD
LIQUID ARGON FILTER ASSEMBLY

SCALE	FILMED	DRAWING NUMBER	REV.
1/4=1		2220.1-MC-193544	

BRUNING·40·107

REV.	DESCRIPTION	DRAWN	DATE
		APPD.	DATE

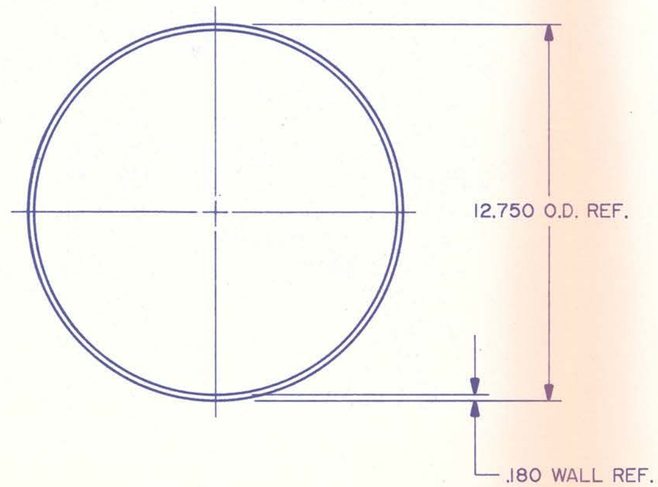

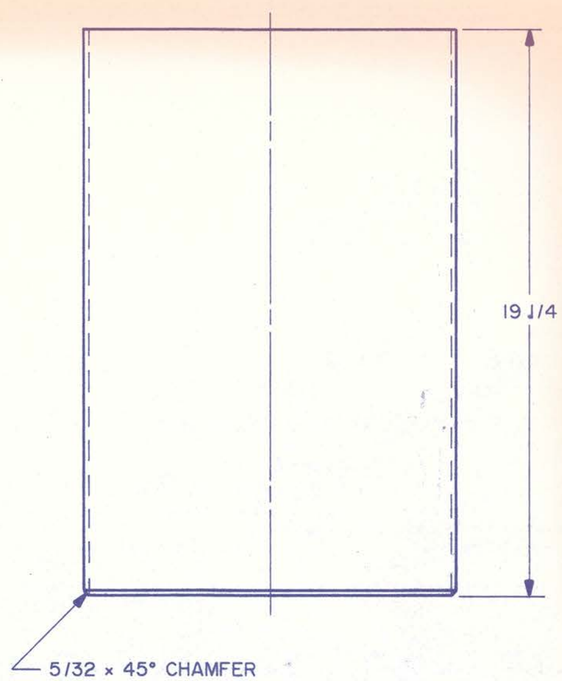

JUL 17 1987

ITEM NO.	PART NO.	DESCRIPTION OR SIZE	QTY. REQ.
PARTS LIST			

UNLESS OTHERWISE SPECIFIED			ORIGINATOR	CYKO	OCT 86
FRACTIONS	DECIMALS	ANGLES	DRAWN	CYKO	OCT 86
± 1/64	± .005	± 1°	CHECKED	W.A.C. / C.M.	Nov 86
			APPROVED	J.T. Story	Nov 86

1. BREAK ALL SHARP EDGES 1/64 MAX.
2. DO NOT SCALE DWG.
3. DIMENSIONING IN ACCORD WITH ANSI Y14.5 STD's.

125 MAX. ALL MACHINED SURFACES

USED ON 2220.1-MC-193532

MATERIAL- PIPE, 12" SCH. 10, S.S. TYPE 304

FERMI NATIONAL ACCELERATOR LABORATORY
UNITED STATES DEPARTMENT OF ENERGY

E706 LIQUID ARGON CALORIMETER
FILTER BODY SHELL
LIQUID ARGON FILTER ASSEMBLY

SCALE	FILMED	DRAWING NUMBER	REV.
1/4 = 1		2220.1-MC-193545	

BRUNING-40-107

REV.	DESCRIPTION	DRAWN	DATE
		APPD.	DATE

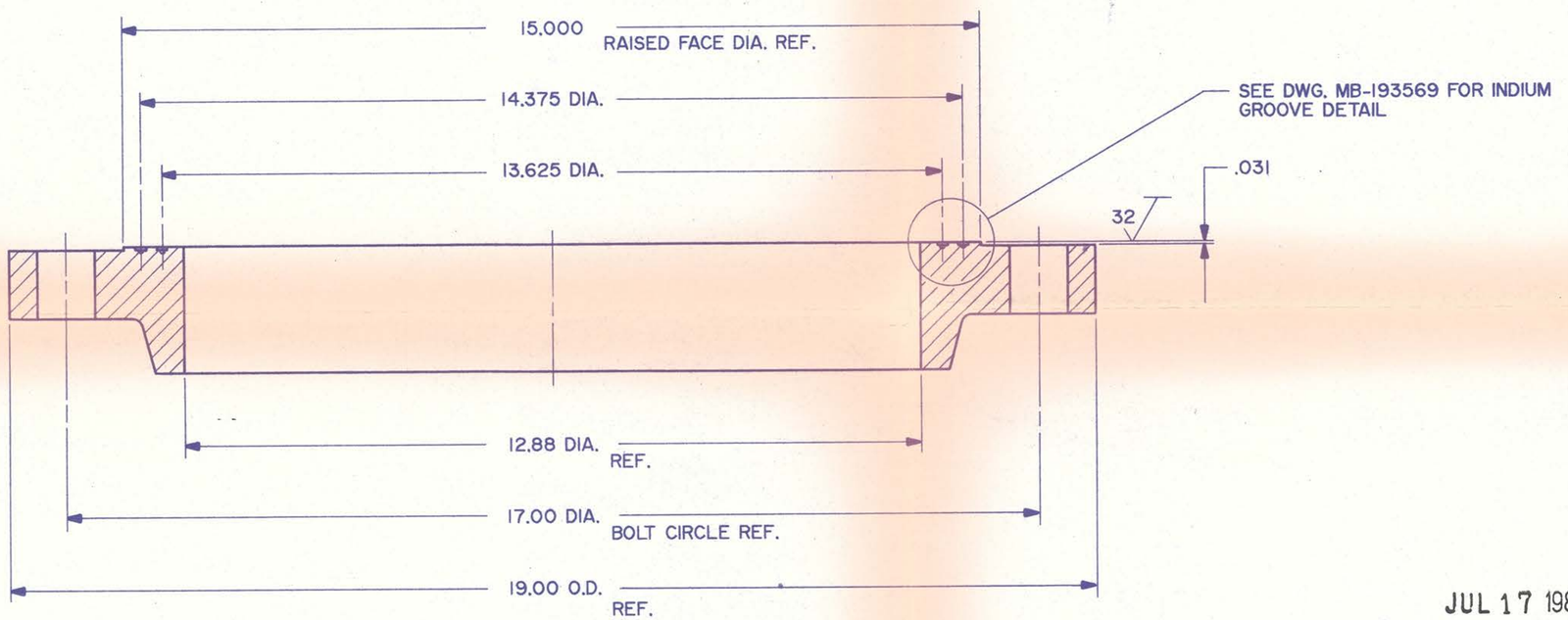

JUL 17 1987

ITEM NO.	PART NO.	DESCRIPTION OR SIZE	QTY. REQ.

PARTS LIST

UNLESS OTHERWISE SPECIFIED					
FRACTIONS	DECIMALS	ANGLES	ORIGINATOR	CYKO	OCT 86
± 1/64	± .005	± 1°	DRAWN	CYKO	OCT 86
			CHECKED	W.L.C. / C.H.	Nov 86
			APPROVED	R.T. Stay	Nov 86

1. BREAK ALL SHARP EDGES 1/64 MAX.
2. DO NOT SCALE DWG.
3. DIMENSIONING IN ACCORD WITH ANSI Y14.5 STD's.

125 MAX. ALL MACHINED SURFACES

USED ON 2220.1-MC-193532

MATERIAL- 12" CLASS 150 ANSI B16.5 SLIP-ON FLANGE, S.S. 304

FERMI NATIONAL ACCELERATOR LABORATORY
UNITED STATES DEPARTMENT OF ENERGY

E706 LIQUID ARGON CALORIMETER
12" FIN. MACH. FLANGE W/INDIUM GROOVES
LIQUID ARGON FILTER ASSEMBLY

SCALE	FILMED	DRAWING NUMBER	REV.
1/2= 1		2220.1-MC-193548	

BRUNING·40·107

REV.	DESCRIPTION	DRAWN	DATE
		APPD.	DATE

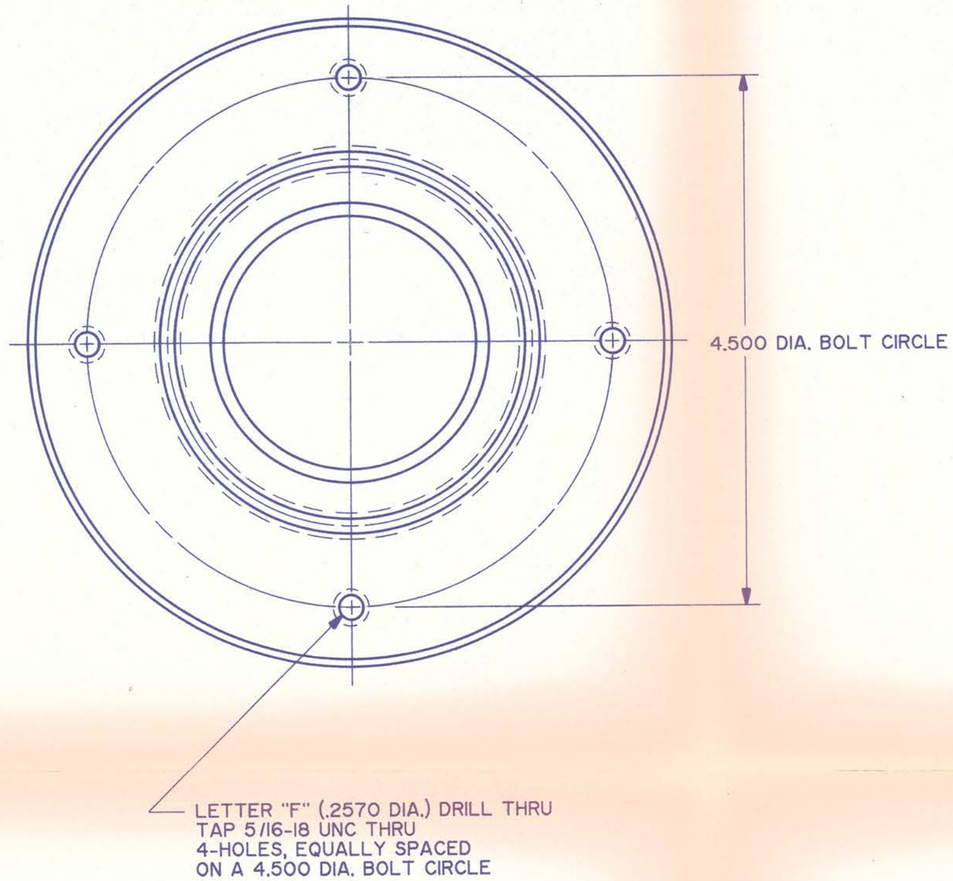

USE PARKER O-RING NO. 2-236

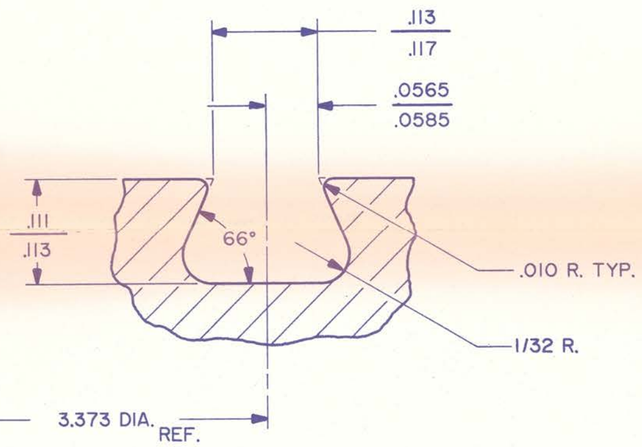

DETAIL A
SCALE: 1 = 1/8

JUL 17 1987

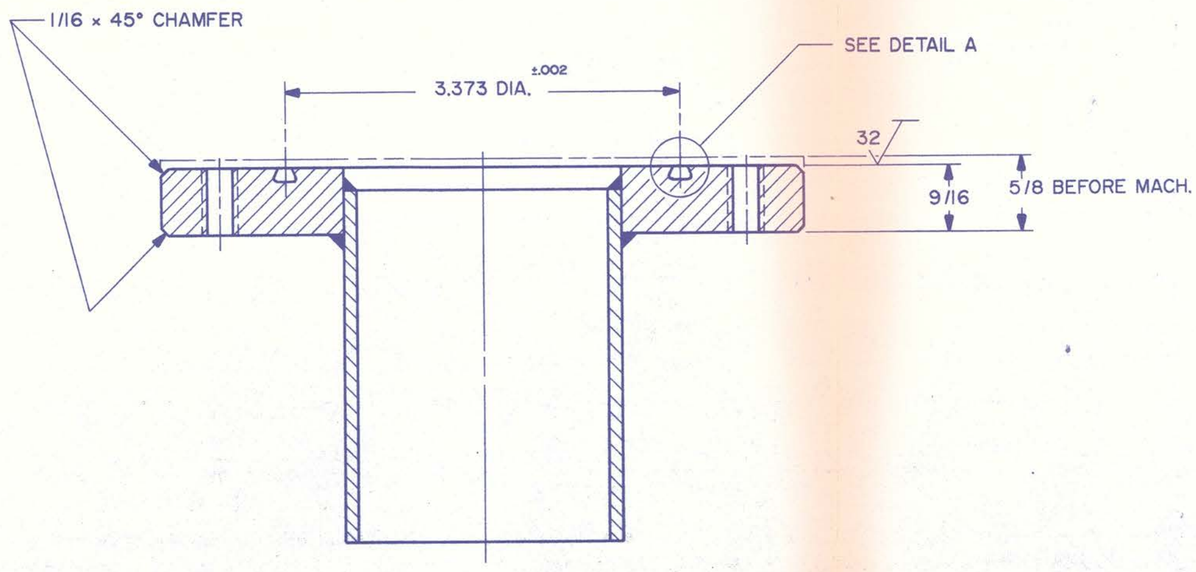

ITEM NO.	PART NO.	DESCRIPTION OR SIZE	QTY. REQ.
PARTS LIST			

UNLESS OTHERWISE SPECIFIED			ORIGINATOR	CYKO	OCT 86
FRACTIONS	DECIMALS	ANGLES	DRAWN	CYKO	OCT 86
± 1/64	± .005	± 1°	CHECKED	W.J.C. / C.X.	NOV 86
			APPROVED	S.T. Story	NOV 86

1. BREAK ALL SHARP EDGES 1/64 MAX.
2. DO NOT SCALE DWG.
3. DIMENSIONING IN ACCORD WITH ANSI Y14.5 STD's.

32 MAX. ALL MACHINED SURFACES

USED ON 2220.1-MD-193531

MATERIAL- MAKE FROM MC-193551
PARALLEL RELIEF PORT WELDMENT

FERMI NATIONAL ACCELERATOR LABORATORY
UNITED STATES DEPARTMENT OF ENERGY

E706 LIQUID ARGON CALORIMETER
FIN. MACH., PARALLEL RELIEF PORT
LIQUID ARGON FILTER ASSEMBLY

SCALE	FILMED	DRAWING NUMBER	REV.
FULL		2220.1-MC-193550	

BRUNING·40·107

REV.	DESCRIPTION	DRAWN	DATE
		APPD.	DATE

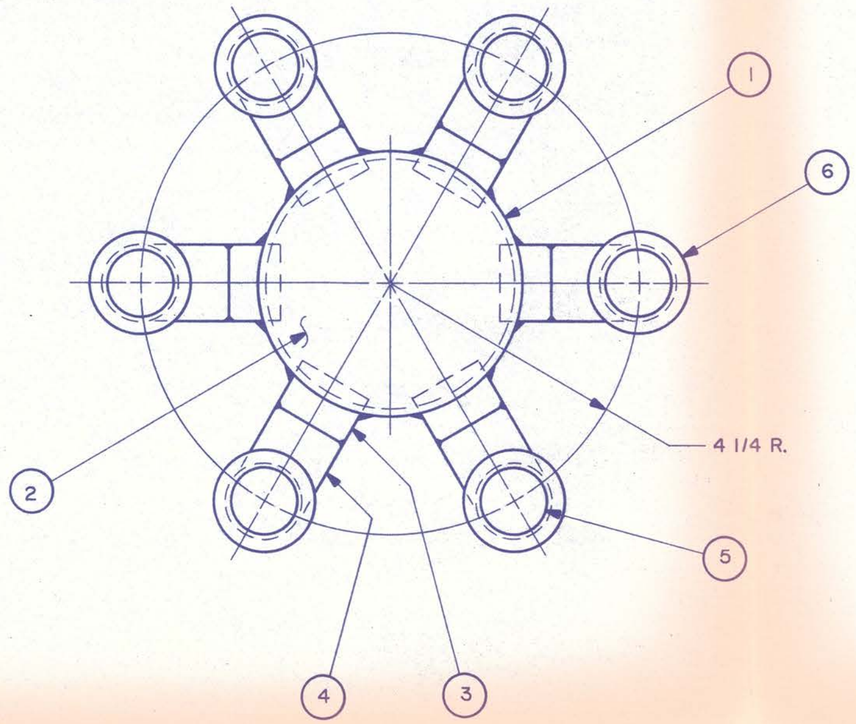

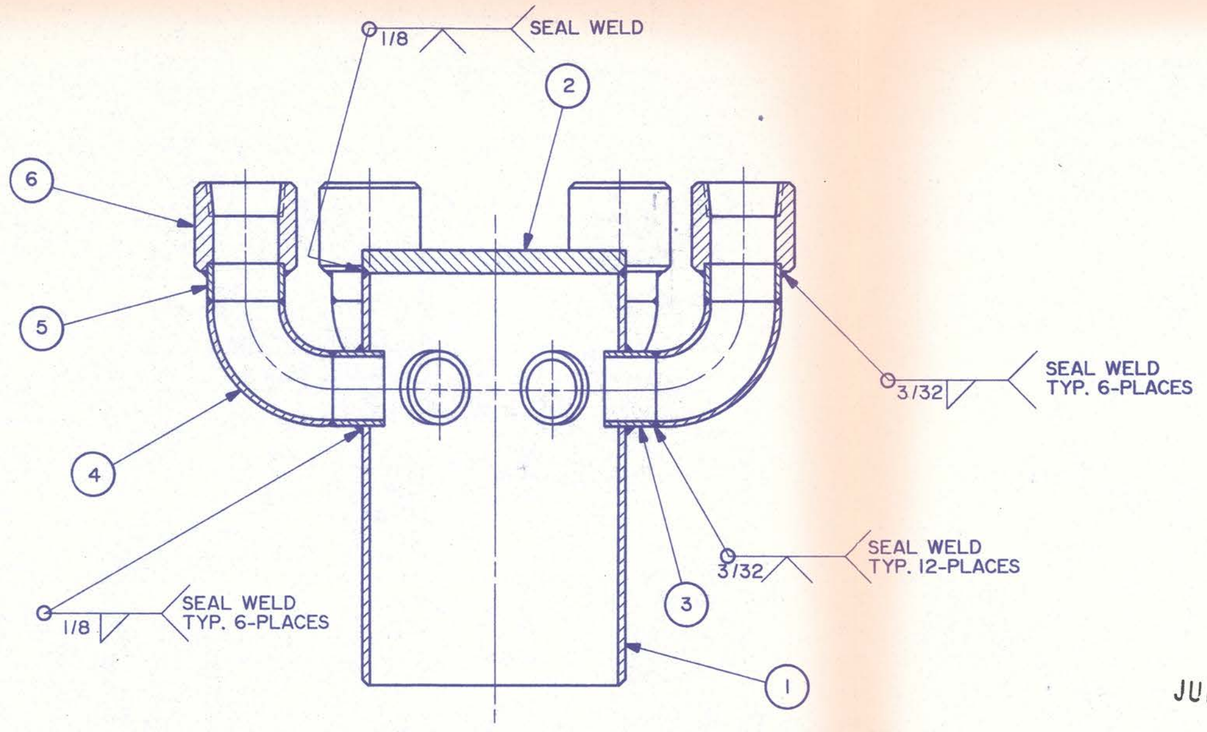

JUL 17 1987

ITEM NO.	PART NO.	DESCRIPTION OR SIZE	QTY. REQ.
6	MB-193586	THREADED MOUNTING ADAPTER	6
5	MB-193587	PIPE STUB (5/8 LG.)	6
4	———	ELBOW, 90°, LG. RAD., 1" SCH. 10, S.S. 304	6
3	MB-193588	PIPE STUB (7/8 LG.)	6
2	MB-193561	BLANK-OFF PLATE	1
1	MB-193585	FILTER ELEMENT HUB	1

PARTS LIST

UNLESS OTHERWISE SPECIFIED			ORIGINATOR	CYKO	OCT 86
FRACTIONS	DECIMALS	ANGLES	DRAWN	CYKO	OCT 86
± 1/64	± .005	± 1°	CHECKED	W.J.C. / C.H.	Nov 86
			APPROVED	S.T. Story	Nov 86

1. BREAK ALL SHARP EDGES 1/64 MAX.
2. DO NOT SCALE DWG.
3. DIMENSIONING IN ACCORD WITH ANSI Y14.5 STD's.

√ MAX. ALL MACHINED SURFACES

USED ON 2220.1-MD-193530

MATERIAL- SEE BILL OF MAT'L

FERMI NATIONAL ACCELERATOR LABORATORY
UNITED STATES DEPARTMENT OF ENERGY

E706 LIQUID ARGON CALORIMETER
FILTER ELEMENT HUB WELDMENT
LIQUID ARGON FILTER ASSEMBLY

SCALE	FILMED	DRAWING NUMBER	REV.
1/2 = 1		2220.1-MC-193549	

BRUNING·40·107

REV.	DESCRIPTION	DRAWN	DATE
		APPD.	DATE

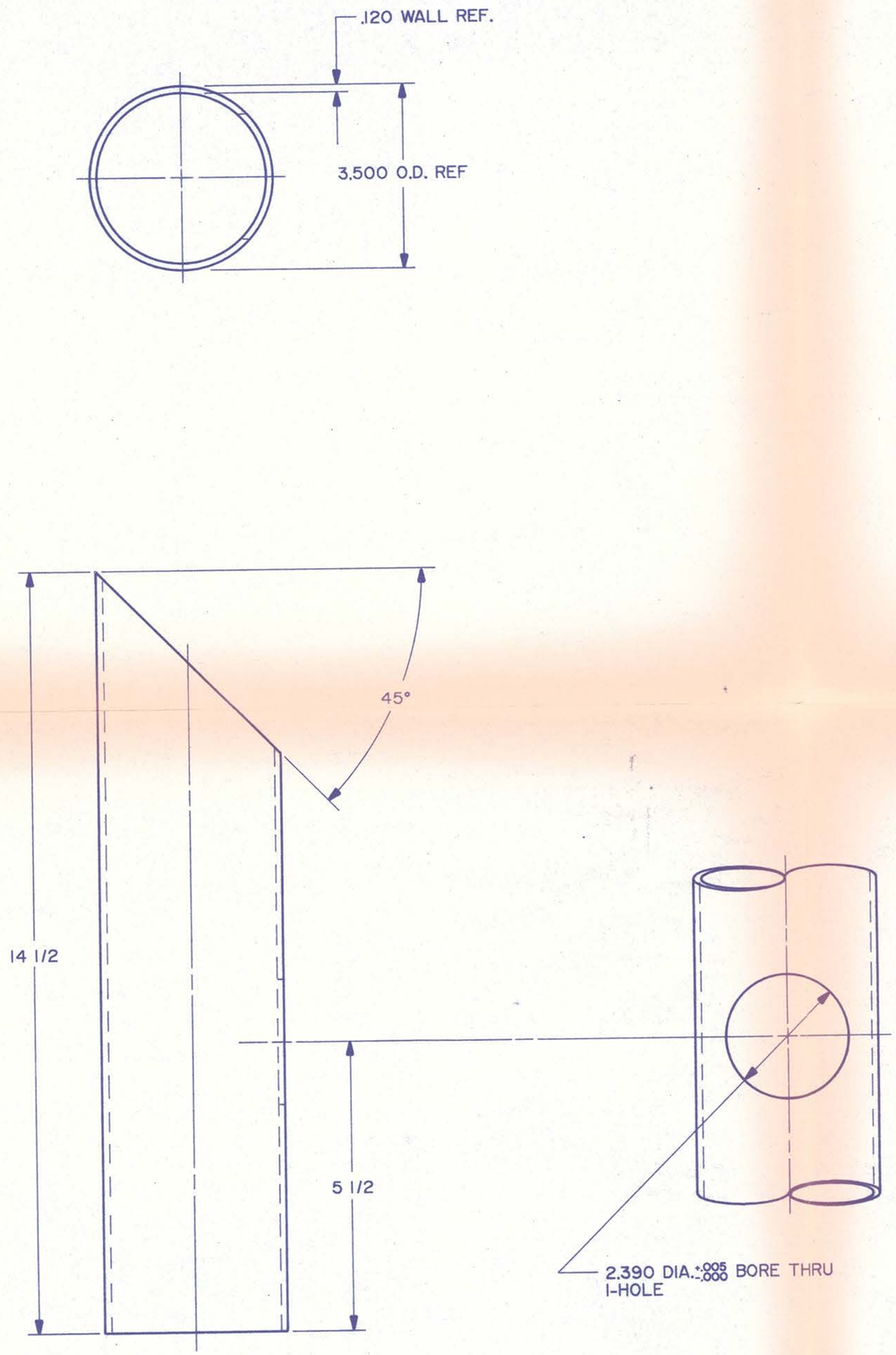

JUL 17 1987

ITEM NO.	PART NO.	DESCRIPTION OR SIZE	QTY. REQ.

PARTS LIST

UNLESS OTHERWISE SPECIFIED			ORIGINATOR	CYKO	OCT 86
FRACTIONS	DECIMALS	ANGLES	DRAWN	CYKO	OCT 86
± 1/64	± .005	± 1°	CHECKED	W.J.C. / C.H.	NOV 86
			APPROVED	L.T. Stoy	NOV 86

1. BREAK ALL SHARP EDGES 1/64 MAX.
2. DO NOT SCALE DWG.
3. DIMENSIONING IN ACCORD WITH ANSI Y14.5 STD's.

125 √ MAX. ALL MACHINED SURFACES

USED ON 2220.1-MD-193530

MATERIAL- PIPE, 3" SCH. 10, SS TYPE 304

FERMI NATIONAL ACCELERATOR LABORATORY
UNITED STATES DEPARTMENT OF ENERGY

E706 LIQUID ARGON CALORIMETER
VACUUM JACKET, FILTER INLET/DPI
LIQUID ARGON FILTER ASSEMBLY

SCALE	FILMED	DRAWING NUMBER	REV.
1/2= 1		2220.1-MC-193553	

BRUNING·40·107

REV.	DESCRIPTION	DRAWN	DATE
		APPD.	DATE

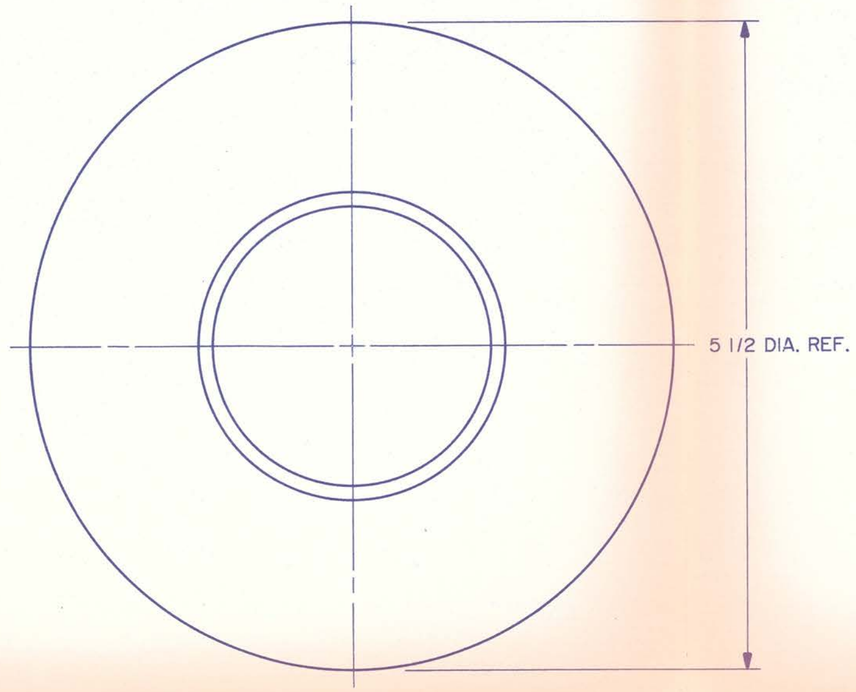

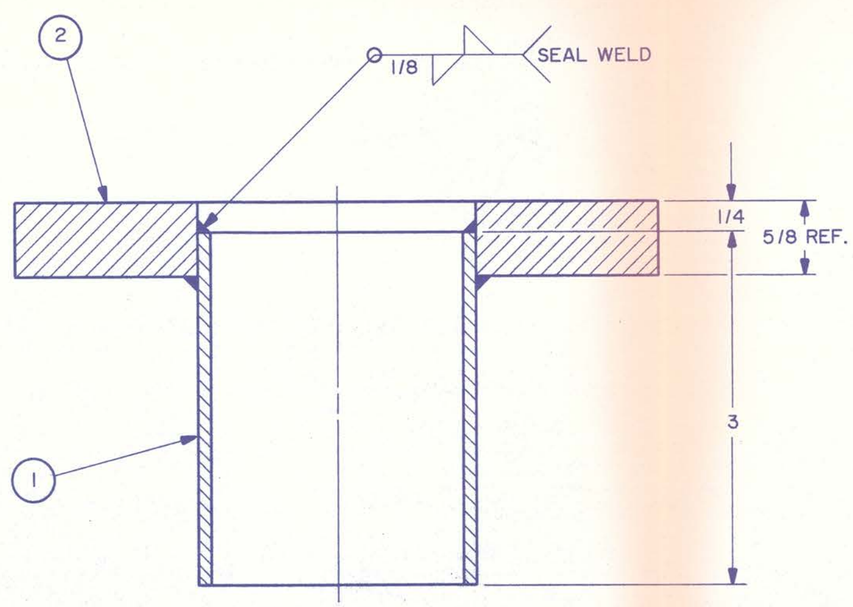

JUL 17 1987

ITEM NO.	PART NO.	DESCRIPTION OR SIZE	QTY. REQ.
2	MB-193564	PARALLEL RELIEF FLANGE	
1	————	PIPE, 2 SCH. 10 × 3 LG., S.S. 304	

PARTS LIST

UNLESS OTHERWISE SPECIFIED			ORIGINATOR	CYKO	OCT 86
FRACTIONS	DECIMALS	ANGLES	DRAWN	CYKO	OCT 86
± 1/64	± .005	± 1°	CHECKED	W.J.C. / C.K.	Nov 86
			APPROVED	J.T. Story	Nov 86

1. BREAK ALL SHARP EDGES 1/64 MAX.
2. DO NOT SCALE DWG.
3. DIMENSIONING IN ACCORD WITH ANSI Y14.5 STD's.

√ MAX. ALL MACHINED SURFACES

USED ON 2220.1-MC-193550

MATERIAL- SEE BILL OF MAT'L

FERMI NATIONAL ACCELERATOR LABORATORY
UNITED STATES DEPARTMENT OF ENERGY

E706 LIQUID ARGON CALORIMETER
PARALLEL RELIEF PORT WELDMENT
LIQUID ARGON FILTER ASSEMBLY

SCALE	FILMED	DRAWING NUMBER	REV.
FULL		2220.1-MC-193551	

BRUNING·40·107

REV.	DESCRIPTION	DRAWN	DATE
		APPD.	DATE

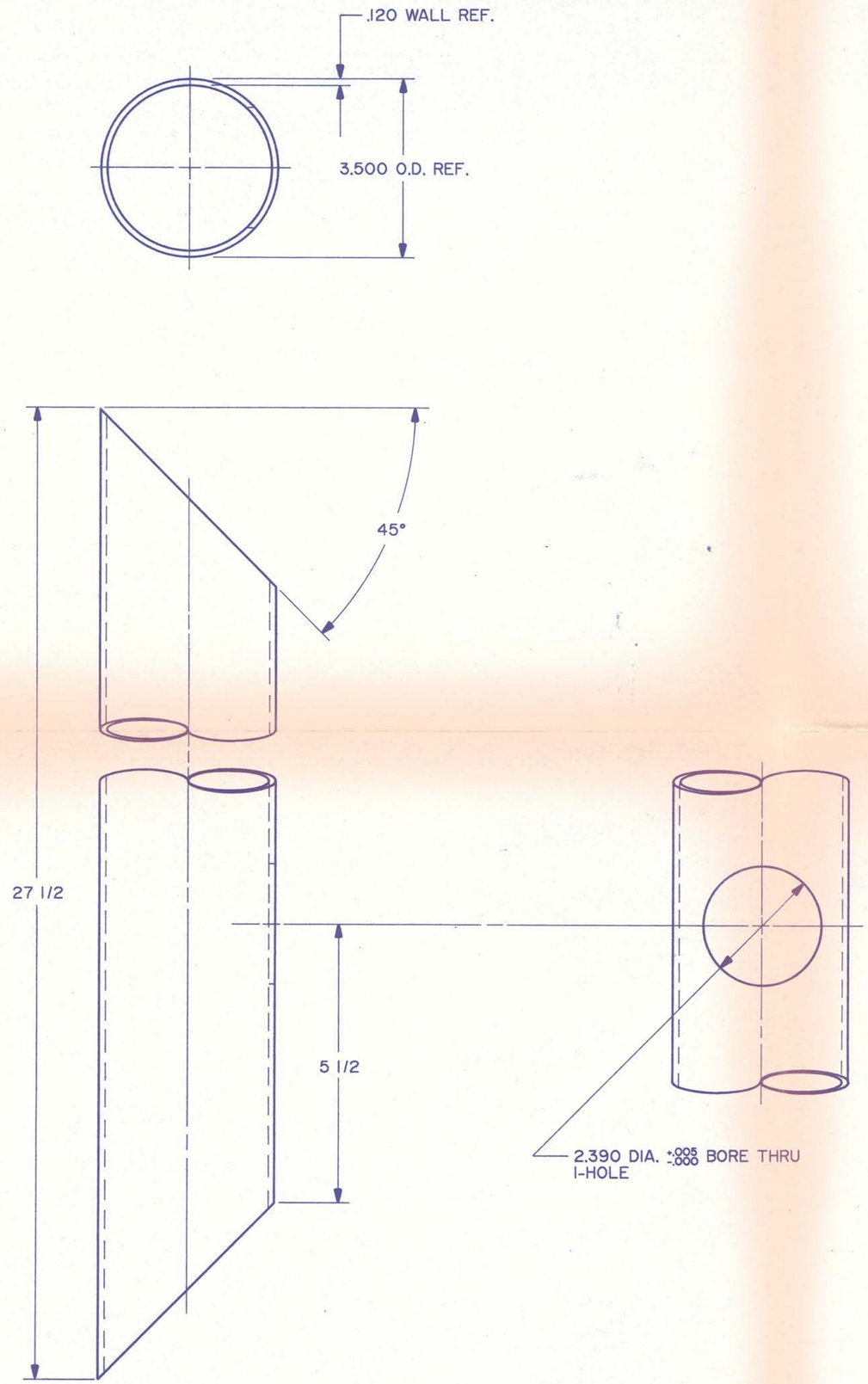

JUL 17 1987

ITEM NO.	PART NO.	DESCRIPTION OR SIZE	QTY. REQ.

PARTS LIST

UNLESS OTHERWISE SPECIFIED			ORIGINATOR	CYKO	OCT 86
FRACTIONS	DECIMALS	ANGLES	DRAWN	CYKO	OCT 86
± 1/64	± .005	± 1°	CHECKED	w.j.c. / C.H.	NOV 86
1. BREAK ALL SHARP EDGES 1/64 MAX.			APPROVED	S.T. Stoy	NOV 86
2. DO NOT SCALE DWG.			USED ON 2220.I-MD-493530		
3. DIMENSIONING IN ACCORD WITH ANSI Y14.5 STD's.					
125 √ MAX. ALL MACHINED SURFACES			MATERIAL- PIPE, 3" SCH. 10,S.S. TYPE 304		

FERMI NATIONAL ACCELERATOR LABORATORY
UNITED STATES DEPARTMENT OF ENERGY

E706 LIQUID ARGON CALORIMETER
VACUUM JACKET, FILTER OUTLET/DPI
LIQUID ARGON FILTER ASSEMBLY

SCALE	FILMED	DRAWING NUMBER	REV.
1/2= 1		2220.1-MC-193552	

BRUNING-40-107

REV.	DESCRIPTION	DRAWN	DATE
		APPD.	DATE

PO/R = PUMPOUT AND RELIEF

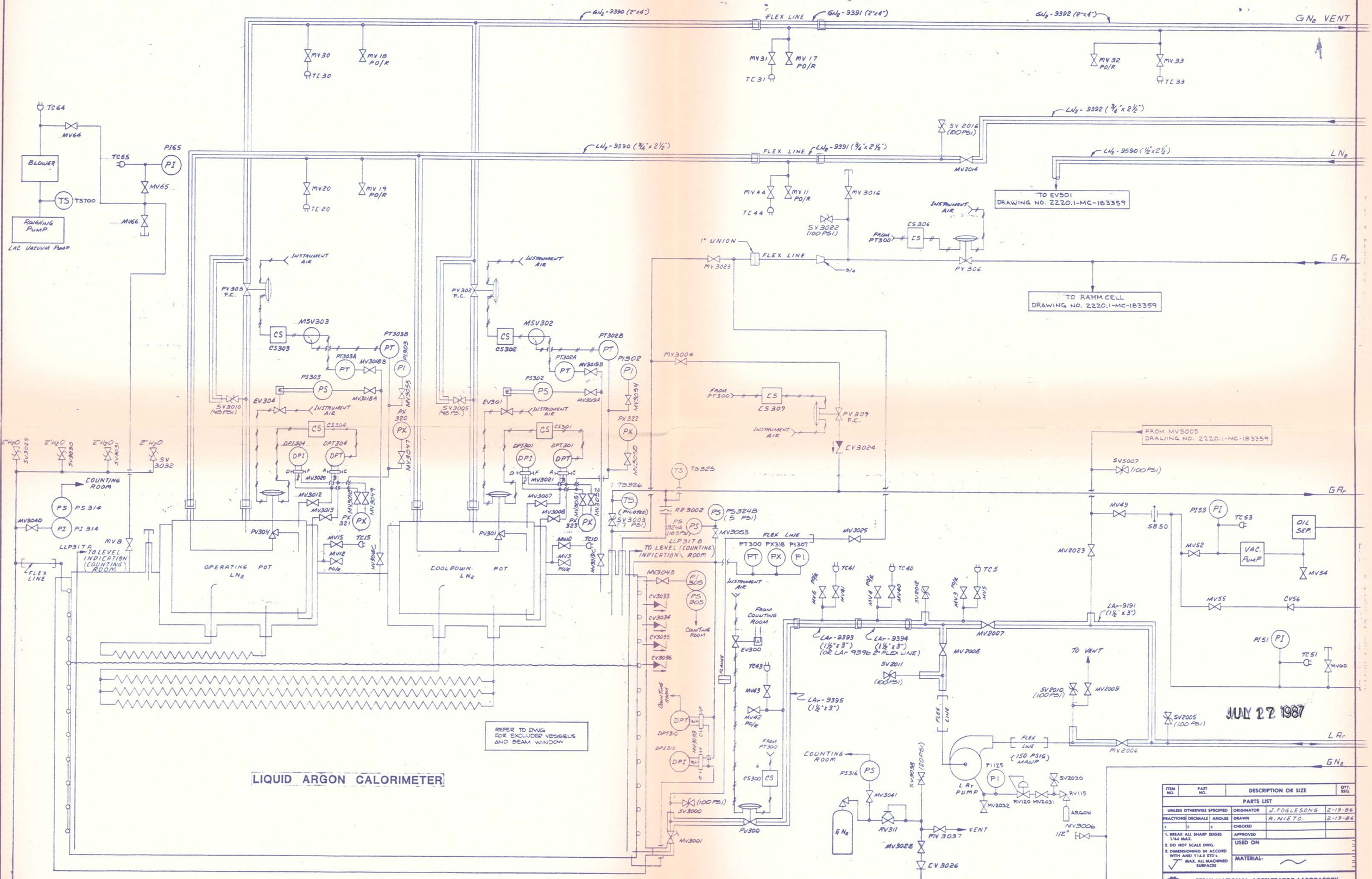

ITEM NO.	PART NO.	DESCRIPTION OR SIZE	QTY. REQ.
		PARTS LIST	

UNLESS OTHERWISE SPECIFIED			ORIGINATOR	J. FOGLESONG	2-19-86
FRACTIONS	DECIMALS	ANGLES	DRAWN	R. NIETO	2-19-86
±	±	±	CHECKED		
1. BREAK ALL SHARP EDGES 1/64 MAX.			APPROVED		
2. DO NOT SCALE DWG.			USED ON		
3. DIMENSIONING IN ACCORD WITH ANSI Y14.5 STD's.			MATERIAL-		
125 MAX. ALL MACHINED SURFACES					

FERMI NATIONAL ACCELERATOR LABORATORY
UNITED STATES DEPARTMENT OF ENERGY

E-706
CRYOGENIC PIPING & INSTRUMENT DIAGRAM

SCALE	FILMED	DRAWING NUMBER	REV.
NONE		2220.1-ME-183293	12

SHEET 1 OF 2

REV.	DESCRIPTION	DRAWN / APPD.	DATE / DATE

PO/R = PUMPOUT AND RELIEF

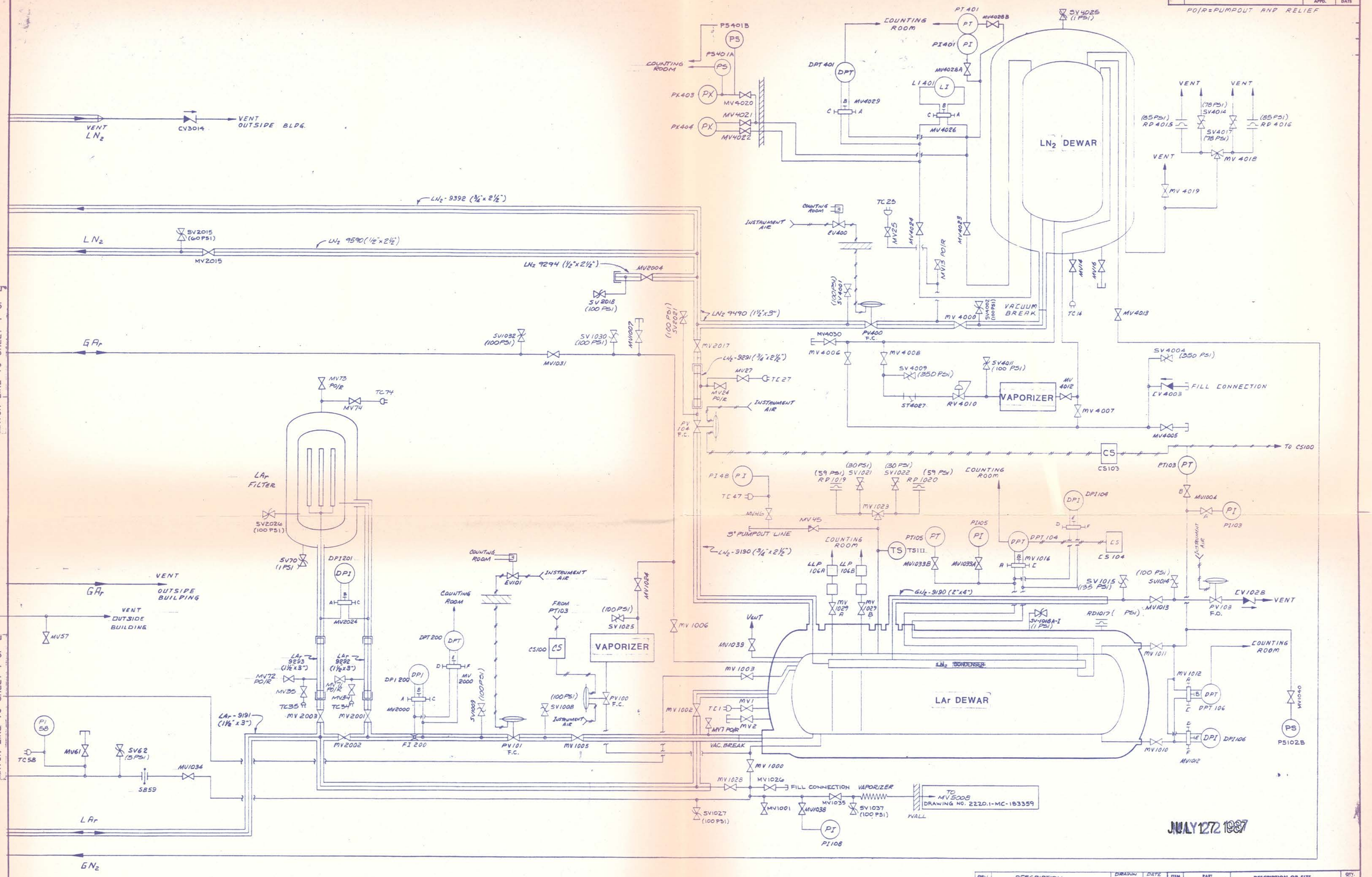

REV	DESCRIPTION	DRAWN / APPD	DATE / DATE
10	GENERAL - REVISION	VIC M	1-29-87
		MES	1-30-87
11	MINOR REV	VIC M	9-9-87
12	GENERAL REVISION EARLIER VERSIONS UNSIGNED ADDED MV2015, SV2015, PS401B, TS111 REMOVED SV2025, PS102A, PX110, PX109	CYKO R. Nieto	5-21-87 5-21-87

ITEM NO.	PART NO.	DESCRIPTION OR SIZE	QTY. REQ.
		PARTS LIST	

UNLESS OTHERWISE SPECIFIED			ORIGINATOR	J. FOGLESONG	FEB-20-86
FRACTIONS	DECIMALS	ANGLES	DRAWN	R. NIETO.	FEB-20-86
±	±	±	CHECKED		

1. BREAK ALL SHARP EDGES 1/64 MAX.
2. DO NOT SCALE DWG.
3. DIMENSIONING IN ACCORD WITH ANSI Y14.5 STD's.

√ MAX. ALL MACHINED SURFACES

APPROVED
USED ON
MATERIAL- ~

FERMI NATIONAL ACCELERATOR LABORATORY
UNITED STATES DEPARTMENT OF ENERGY

E 706
CRYOGENIC PIPING & INSTRUMENT DIAGRAM

SCALE	FILMED	DRAWING NUMBER	REV.
NONE		2220.1-ME-183293	12

SHEET 2 OF 2