Fermilab

Particle Physics Division

Mechanical Department Engineering Note

Number: MD-ENG-524 Date: July 22,2014

Project: MicroBooNE

Project Internal Reference:

Title: Calculations for MicroBooNE Condenser support

Author(s): Jim Kilmer

Reviewer(s): Dave Poshial 7/23/2014

Key Words:

Abstract/Summary:
This note gives all of the structural calculations for the support structure to hold the condensers for MicroBooNE.

Applicable Codes:

AISC Manual of Steel Construction, ninth edition.

Fitzgerald, Robert W., Strength of Materials, Addison-Wesley Publishing Co, 1967.

Calculations for the MicroBooNE Condensers Support
James Kilmer
June 4, 2014
Revised 7/24/2014

This note provides the calculaitons for a support structure to hold up the two LAr condensers for MicroBooNE. The major constraints driving the design are the crowded area on the intermediate deck and the need to support the weight of the vessels (1500lbs each). The support is shown in drawings F10022071 "Assembly,Support Structure", and F10022492 "Weldment, Support Structure". From drawing 492 the weight of the support frame is 400 lbs. The total load on the frame is then 3400 lbs.

COLUMNS AND GUSSETED BRACKETS

First treat the upper frame like a beam in the short direction and find the reaction forces for the columns and the brackets. The load of the vessels is not on the center axis, but the weight of the frame is so use superposition to find a total. For the weight of the frame use Case 7 of the AISC manual and for the vessels use Case 8, both on page 2-298.

All material used in the frame is 4" by 4" by 1/4" square structural tubing with the following properties:

$A := 3.59 \cdot in^2$ $\quad I := 8.22 \cdot in^4$ $\quad S := 4.11 \cdot in^3$ $\quad r := 1.51 \cdot in$

$J := 13.5 \cdot in^4$ $\quad Z := 4.97 \cdot in^3$ $\quad F_y := 46000 \cdot psi$

$P := 400 \cdot lbf + 600 \cdot lbf$ Weight of frame plus 600 lb for piping and valves

$R := \frac{P}{2} = 500 \cdot lbf$ Reaction load on columns or brackets

Now look at the vessel reactions where R1 is the brackets and R2 is the columns.

$a := 16.5 \cdot in$ To center of beam

$b := 31.0 \cdot in$ To center of column

$l := a + b$

$P := 3000 \cdot lbf$ Weight of both vessels on centerline

$R1 := \frac{P \cdot b}{l} = 1.958 \times 10^3 \cdot lbf$ Load divided between two brackets

$R2 := \frac{P \cdot a}{l} = 1.042 \times 10^3 \cdot lbf$ Load divided between two columns

Now add the reactions of get the total

$$R1_{total} := \frac{(R + R1)}{2} = 1.229 \times 10^{3} \cdot lbf$$ Total load on each bracket

$$R2_{total} := \frac{(R + R2)}{2} = 771.053 \cdot lbf$$ Total load on each column

Look at the stresses and anchors for the wall brackets. The centerline of the frame sits 10.75 inches from the wall.

$$M := R1_{total} \cdot 10.75 \cdot in = 1.321 \times 10^{4} \cdot in \cdot lbf$$ Moment on each bracket

The gusset flange has holes for eight bolts. Assume that the upper three bolts carry all of the moment and the other five are not involved. Assume that the three bolts equally distribute the load.

$$T := \frac{M}{3 \cdot 24.50 \cdot in} = 179.744 \cdot lbf$$ Tensile load on each of the three bolts

The plate also puts a shear on the bolts but all bolts would contribute to supporting the shear load.

$$Shear := \frac{R1_{total}}{8} = 153.618 \cdot lbf$$ Shear on each bolt

For the bolts choose Hilti Kwik Bolts of 1/2" size in carbon steel. The concrete is 4000 psi compressive strength. For these bolts, from the Hilti catalog, each bolt has an allowable tensile load of 1450 pounds for a 2-1/4" embedment and an allowable shear load of 1970 pounds. These bolts are perfectlly adequate for this application.

The tubing for these brackets is well oversized for the small bending and compression loads, but look at the weld sizing. The weld on the horizontal member to the flange is in tension. All welds are done with E70 rod.

$$t := .707 \cdot \frac{3}{16} \cdot in = 0.133 \cdot in$$ Weld throat distance

$$l_w := 4 \cdot 4 \cdot in = 16 \cdot in$$ Weld length

$$\sigma_{weld} := \frac{R1_{total}}{t \cdot l_w} = 579.419 \cdot psi$$

Because the brace is at 45 degrees the horizontal force is the same as the vertical force. This stress is negligable compared to the weld rod allowable even assuming we use a safety factor of five and limit stress to 14000 psi in either tensile or shear stress. The welds on the brace are higher because the weld length is only 75% of the horizontal member. On both ends of the brace the stress is calculated.

$l_{w1} := 3 \cdot 4 \cdot in = 12 \cdot in$

$\sigma_{weld1} := \frac{R1_{total}}{t \cdot l_{w1}} = 772.558 \cdot psi$

This weld stress is also fine so the gusset is OK.

Now look at the columns. They are fabricated from 4" by 4" by 1/4" wall square tubing. The longer of the two columns is almost 7 feet long. Use that number in the tables.

$K := 1$

$L := 7 \cdot ft$

From page 3-43 for a KL = 7 feet a 1/4" wall tube will have an allowable concentric load of 79 kips. For the columns R2total is 771 pounds and is much less thaN 79 kips. Therefore the columns are OK.

UPPER FRAME

Start with drawing F10022492, item 2. These two are simple beams with a point load as in Case 8 on page 2-298. The condensers are supported by two threaded rods so the load is 750 pounds on each of the beams.

$P := 750 \cdot lbf$

$l := 37.06 \cdot in - 4 \cdot in$ $\quad a := 18.5 \cdot in - 4 \cdot in$ $\quad b := l - a = 18.56 \cdot in$

$R1_{part2} := \frac{P \cdot b}{l} = 421.053 \cdot lbf$

$R2_{part2} := \frac{P \cdot a}{l} = 328.947 \cdot lbf$

$M_{max} := \frac{P \cdot a \cdot b}{l} = 6.105 \times 10^{3} \cdot in \cdot lbf$

$f_b := \frac{M_{max}}{S} = 1.485 \times 10^{3} \cdot psi$

$F_b := 0.60 \cdot F_y = 2.76 \times 10^{4} \cdot psi$

Since fb is much less than Fb these members are fine.

Now look at item 1. It is loaded by the two beams above (item 2) and they provides a torque to the beam. First look at bending as in Case 9 on page 2-298.

$P := R2_{part2}$ Reaction force from item 2 is the load for item 1

$R := P$ Item 1 reaction force is equal to the load

$a := 33.0 \cdot in$ From the drawing

$M_{max} := P \cdot a = 1.086 \times 10^4 \cdot in \cdot lbf$

$$f_{bitem1} := \frac{M_{max}}{S} = 2.641 \times 10^3 \cdot psi$$

Since this is less than Fb the member is OK in bending.

The load above puts a torque on the member. This torque is resisted by the welds in shear on each end of the member.

$T := P \cdot 2 \cdot in = 657.895 \cdot in \cdot lbf$

Use formula 7.10 from page 158 of the <u>USS Steel Design Manual.</u>

$b := 4 \cdot in$ $t := 0.25 \cdot in$ Dimensions of the tube

$$f_s := \frac{T}{2 \cdot b^2 \cdot t} = 82.237 \cdot psi$$ Shear stress from torque on the tube

$F_s := 0.4 \cdot F_y = 1.84 \times 10^4 \cdot psi$ Allowable shear stress for the tube in torsion.

This shear is fine, however the calculation depends on the ends of the tube being fixed to rotation. This means the welds from item 1 to item 3 are also involved. The torque can be modeled as a couple where the inside weld and outside weld take the force in shear. Both welds are 3/16" fillet welds and each sees one force of the couple equal to R2part2. Neglect the flare bevel joints on the top and bottom side of the tube.

$$t_w := \frac{3}{16} \cdot in \cdot 0.707 = 0.133 \cdot in$$ Throat distance of weld

$d := 3 \cdot in$ Length of weld, not including round corners

$A_{weld} := t_w \cdot d = 0.398 \cdot in^2$

$$\sigma_{weldshear} := \frac{R2_{part2}}{A_{weld}} = 827.15 \cdot psi$$

This weld shear is no problem for a weld with E70 rod.

Consider items number 3. These beams have two non-symetrically placed loads one of which provides a torque to the beam. Use case 11 on page2-299 for the simple bending part.

$$P_1 := R2_{part2} = 328.947 \cdot lbf$$

$$P_2 := 750 \cdot lbf$$

$$a := (53 - 37.06 - 1.5 - 2 - 2) \cdot in = 10.44 \cdot in$$

$$b := (39.01 - 31 - 2) \cdot in = 6.01 \cdot in$$

$$l := 39.01 \cdot in$$

$$R1_{part3} := \frac{P_1 \cdot (l - a) + P_2 \cdot b}{l} = 356.461 \cdot lbf$$

$$R2_{part3} := \frac{P_1 \cdot a + P_2 \cdot (l - b)}{l} = 722.487 \cdot lbf$$

$$M_2 := R2_{part3} \cdot b = 4.342 \times 10^3 \cdot in \cdot lbf$$

$$f_{bpart3} := \frac{M_2}{S} = 1.056 \times 10^3 \cdot psi$$

This bending stress is less than Fb so the part is OK.

For the torsion on part 3 the force P1 is eccentric to the centerline of the part.

$$M_3 := P_1 \cdot 2in = 657.895 \cdot lbf \cdot in$$

The plates bolted to the tops of the columns may not resist the twist since the columns are most likely not stiff enough. If they do the twist must be resisted by the welds on the column plates to the tubes which are flare bevel joints. Assume that the welds are four inches long. One weld supplies the fulcrum and the other takes the load in tension.

$$Throat := \frac{5}{8} 0.25 \cdot in$$

$$Area_{weld} := Throat \cdot 4 \cdot in = 0.625 \cdot in^2$$

$$weldtension := \frac{M_3}{4 \cdot in \cdot Area_{weld}} = 263.158 \cdot psi$$

The weld will be fine in tension at this stress.

At the other end item 4 must support the item 3 load. The load is not on center so torques are applied at each end of item 4 and must be the same on each end. First find the eccentricity of the load. Part number 4 is at a 45 degree angle corner.

$$\frac{15.33 \cdot in + 12.01 \cdot in}{2} = 13.67 \cdot in$$ Length of the central axis of part 4

$$e := \sqrt{\frac{(13.67 \cdot in)^2}{2}} = 9.666 \cdot in$$

$$R2_{part3} = 722.487 \cdot lbf$$ Load on the ends of part 4

$$Torque_{part4} := e \cdot R2_{part3} = 6.984 \times 10^3 \cdot lbf \cdot in$$

This torque is seen at each end of part 4. It is resisted by the end welds in shear. Assume that the torque is applied at the plane through the welds in the center of the section. This case is shown on page 276-277of Strength of Materials by Robert W. Fitzgerald. The plane is at a 22.5 degree angle to the end of the 4" by 4" tube. Since the torque is centered on the tube also calculate the polar moment of inertia at the same point.

$$l_c := \frac{4 \cdot in}{\cos(22.5)} = -4.58 \cdot in$$ Length of the cut edge of the tube

The welds on these parts are 3/16 inch bevel goove welds all around the tube.

From the reference above the J of each of the four welds around the joint is given by

$$i := 0 .. 3$$

$$t := \frac{3}{16} \cdot in$$

$$L := 4.58 \cdot in, 4.0 \cdot in, 4.58 \cdot in, 4.0 \cdot in$$

$x_i :=$

$2.0 \cdot in$
$0 \cdot in$
$2.0 \cdot in$
$0 \cdot in$

$y_i :=$

$0 \cdot in$
$2.29 \cdot in$
$0 \cdot in$
$2.29 \cdot in$

$$L := \begin{pmatrix} 4.58in \\ 4in \\ 4.58in \\ 4in \end{pmatrix} \qquad x := \begin{pmatrix} 2 \\ 0 \\ 2 \\ 0 \end{pmatrix} in \qquad y := \begin{pmatrix} 0 \\ 2.29 \\ 0 \\ 2.29 \end{pmatrix} in$$

$$J_i := \frac{1}{12} \cdot t \cdot (L)^3 + t \cdot L \cdot \left[(x)^2 + (y)^2 \right] = \begin{pmatrix} 16.237 \\ 15.736 \\ 16.237 \\ 15.736 \end{pmatrix} \cdot in^4$$

$$J := \sum J_i = 63.947 \cdot in^4$$

Total Polar Moment of Inertia for four welds

Now find the stress at the middle of the short welds which are the farthest from the centroid of the welds

$R := 2.29 \cdot in$ Distance from the torque to the weld centroid

$M := Torque_{part4}$

$$Stress_{shear} := \frac{M \cdot R}{J}$$

$$Stress_{shear} = 250.092 \cdot psi$$

This stress is no problem for welds done with E70 rod.

Finally calculate the stress in the threaded support rods for the vessels. The rods are 1/2" - 13 made of 18-8 stainless steel. From the ASME Boiler and Pressure vessel code the <u>Specification for Alloy Steel Bolting Materials for Low Temperature Service</u>,SA-320, gives a yield strength for this bolting material of 30 ksi. For this size bolt the tensile stress area is 0.1419 sq in.

Load on each rod =750 lb

$$\sigma := \frac{750 \cdot lb}{.1419 \cdot in^2} = 5.285 \times 10^3 \frac{lb}{in^2} \qquad SF := \frac{30000psi}{5285 \cdot psi} = 5.676$$

A safety factor in tension of greater than 5 is OK for this threaded rod to support the condenser vessels.

DESCRIPTION: F10022071
CATEGORY: ASSEMBLY
PROJECT: E974MicroBoone-Utilities

REV	REVISION CONTROL DOCUMENT	DATES	SIGNATURES
-	F10022071---RCD	DRAWN / APPROVED	

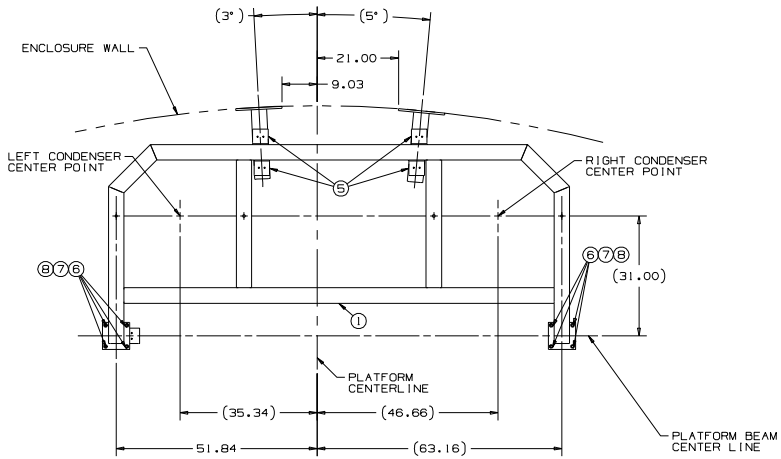

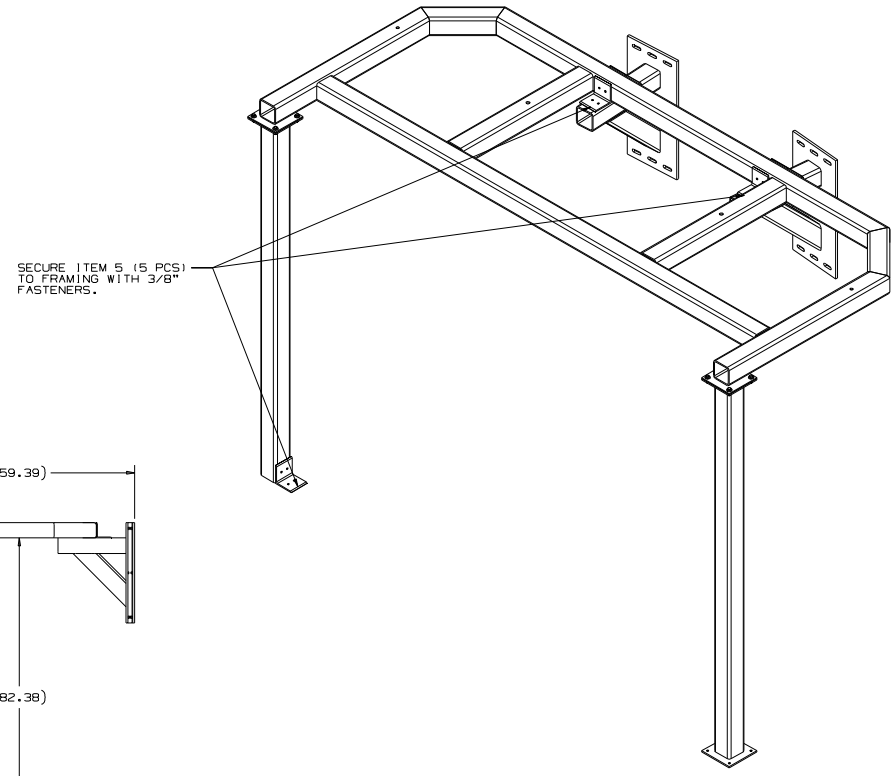

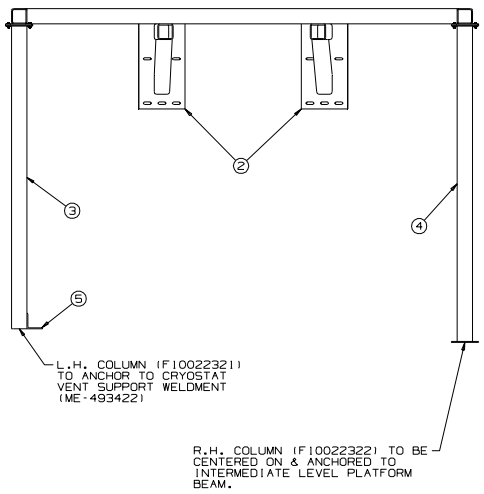

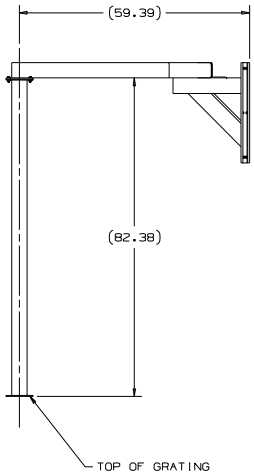

APPROXIMATE WEIGHT: 85 LBS.

ITEM	PART NO.	DESCRIPTION	QTY.
8	COML	WASHER, 3/8; GR 5 ZINC PLATED STEEL MCMASTER CARR: 90108A417	16
7	COML	HEX NUT, 3/8-16 UNC-2B; GR 5 ZINC PLATED STEEL MCMASTER CARR: 95462A031	8
6	COML	HHCS, 3/8-16 UNC-2A X 1.25LG; GR 5 ZINC PLATED STEEL MCMASTER CARR: 92865A626	8
5	F10022225	ANGLE, STRUCTURAL - 4x4x1/4; square cut ends; drilled	5
4	F1002232	ASSEMBLY, COLUMN - condenser support; RH	1
3	F1002232I	ASSEMBLY, COLUMN - condenser support; LH	1
2	F10021711	ASSEMBLY, WALL SUPPORT STRUCTURE	2
1	F10022492	WELDMENT, SUPPORT STRUCTURE - upper tube weldment	1

PARTS LIST

UNLESS OTHERWISE SPECIFIED				
±.X	±.XX	±.XXX	±X/X	±X°
.1	.06	.005	1/16	1°

BREAK ALL SHARP EDGES .015 MAX.
DO NOT SCALE DRAWING
DIMENSIONS BASED ON ASME Y14.5M-1994
MAX. ALL MACH SURFACES 250
DRAWING UNITS: INCHES

DRAWN	J.TILLMAN	DATE	29-May-2014
CHECKED		DATE	
APPROVED		DATE	
USED ON			
MATERIAL	SEE B.O.M.		
GROUP: Particle Physics Mechanical Support		CAGE CODE: 0U5R6	

FERMI NATIONAL ACCELERATOR LABORATORY
UNITED STATES DEPARTMENT OF ENERGY

NAME: ASSEMBLY, SUPPORT STRUCTURE

SCALE	SIZE	DRAWING NUMBER	SHEET	REV
1:1	D	F10022071	1 OF 1	-

DESCRIPTION: WELDMENT, SUPPORT STRUCTURE - upper tube weldment
CATEGORY: WELDMENT PROJECT:

REV	REVISION CONTROL DOCUMENT	DATES	SIGNATURES
-	F10022492---RCD		DRAWN
			APPROVED

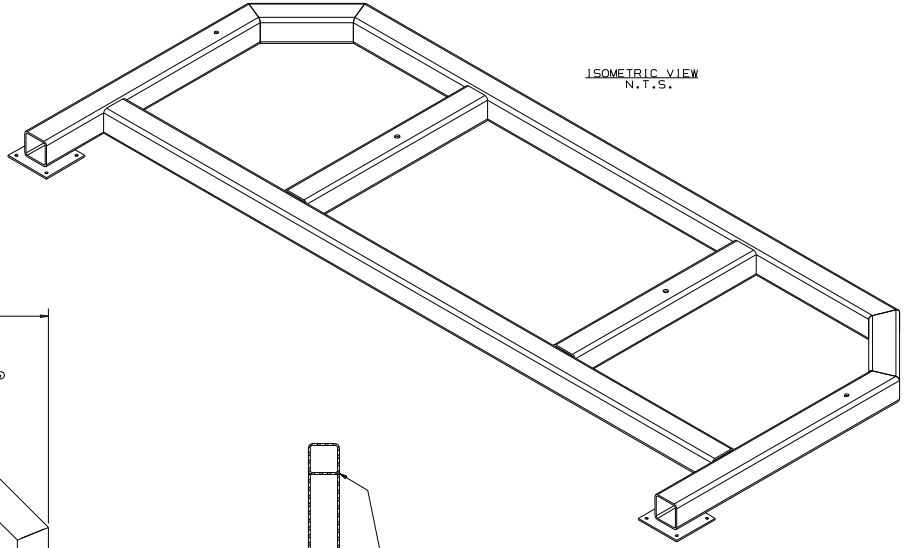

ISOMETRIC VIEW
N.T.S.

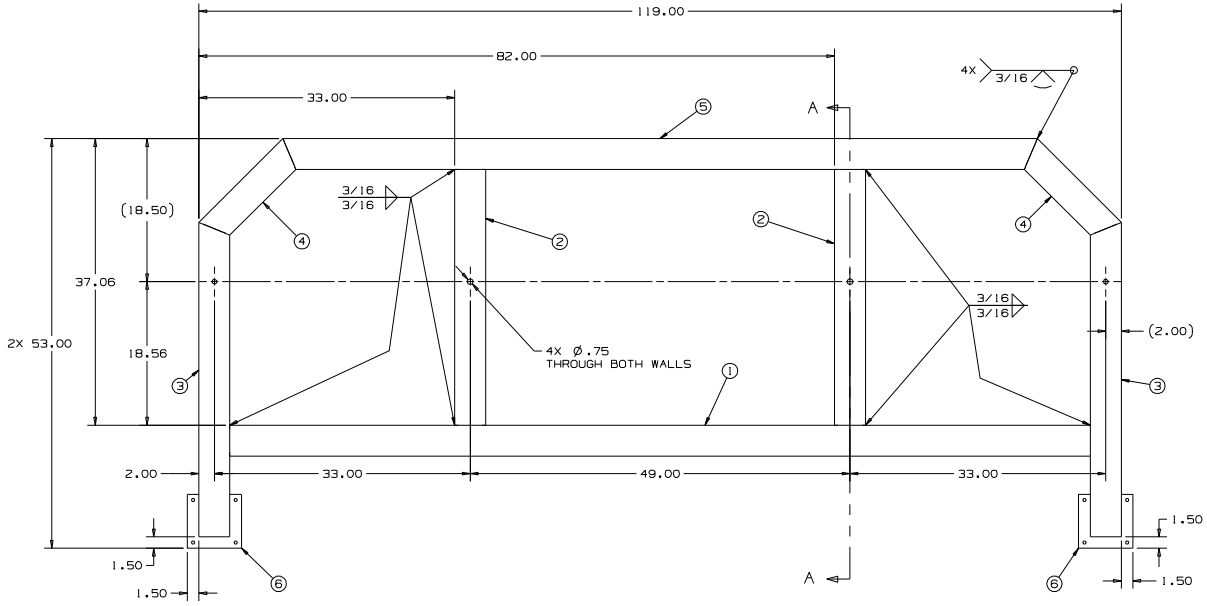

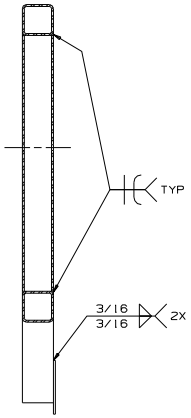

SECTION A-A

ITEM	PART NO.	DESCRIPTION	QTY.
6	F10021709	PLATE, END - BOLTED END PLATE FOR COND. SUP. POST	2
5	F10022075	TUBE, SQUARE - MITERED ENDS	1
4	F10022154	TUBE, SQUARE - MITERED ENDS	2
3	F10022076	TUBE, SQUARE - 4X4X1/4; MITERED ENDS; DRILLED	2
2	COML	TUBE, SQUARE; 4X4X1/4" X 33.06 LG A500 GRADE B	2
1	COML	TUBE, SQUARE; 4X4X1/4" X 111.00 LG A500 GRADE B	1

PARTS LIST

NOTES:
1. ALL WELDMENTS MUST BE IN ACCORDANCE WITH THE STRUCTURAL WELDING CODE ANSI/AWS D1.1
2. ALL WELDS SHALL BE MADE IN A SEQUENCE THAT WILL BALANCE THE APPLIED HEAT AND MINIMIZE DISTORTION AND SHRINKAGE.
3. ALL WELD METALS ARE TO BE E70XX UNLESS OTHERWISE SPECIFIED
4. CLEAN & DEGREASE WELDMENT PRIOR TO PAINTING. PRIME WITH FLAT WHITE 1600 SYSTEM MULTI-PURPOSE ENAMEL RUSTOLEUM PRIMER OR EQUIVALENT.
5. APPROXIMATE WEIGHT: 400 LBS.

UNLESS OTHERWISE SPECIFIED				
±.X	±.XX	±.XXX	±X/X	±X°
.1	.06	.005	1/16	1°

BREAK ALL SHARP EDGES .015 MAX.
DO NOT SCALE DRAWING
DIMENSIONS BASED ON ASME Y14.5M-1994
MAX. ALL MACH SURFACES 250
DRAWING UNITS: INCHES

DRAWN	J.TILLMAN	DATE	27-May-2014
CHECKED		DATE	
APPROVED		DATE	
USED ON	F10022071		
MATERIAL	SEE B.O.M.		
GROUP: Particle Physics Mechanical Support		CAGE CODE: 0U5R6	

FERMI NATIONAL ACCELERATOR LABORATORY
UNITED STATES DEPARTMENT OF ENERGY

NAME: WELDMENT, SUPPORT STRUCTURE

SCALE	SIZE	DRAWING NUMBER	SHEET	REV
1:8	D	F10022492	1 OF 1	-

DESCRIPTION: ASSEMBLY, WALL SUPPORT STRUCTURE - tube weldment to support
CATEGORY: ASSEMBLY PROJECT: E974MicroBoone-Utilities

REV	REVISION CONTROL DOCUMENT	DATES	SIGNATURES	
-	F10021711---RCD		DRAWN	
			APPROVED	

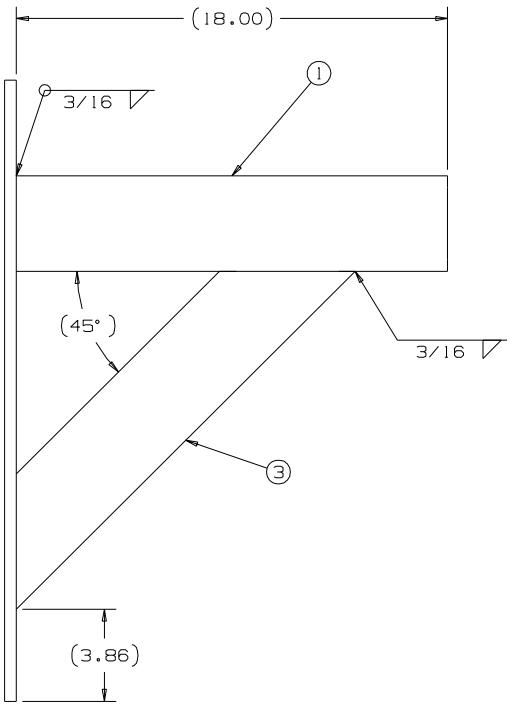

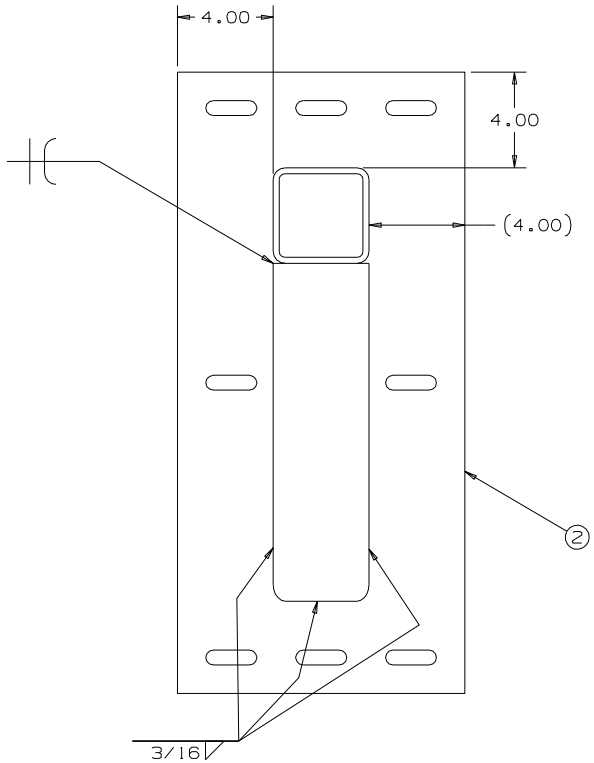

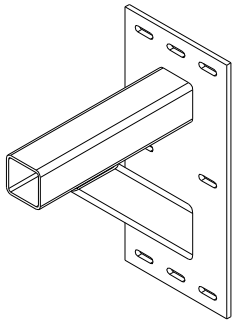

ISOMETRIC VIEW
N.T.S.

NOTES:
1. ALL WELDMENTS MUST BE IN ACCORDANCE WITH THE STRUCTURAL WELDING CODE ANSI/AWS D1.1
2. ALL WELDS SHALL BE MADE IN A SEQUENCE THAT WILL BALANCE THE APPLIED HEAT AND MINIMIZE DISTORTION AND SHRINKAGE.
3. ALL WELD METALS ARE TO BE E70XX UNLESS OTHERWISE SPECIFIED
4. CLEAN & DEGREASE WELDMENT PRIOR TO PAINTING. PRIME WITH FLAT WHITE 1600 SYSTEM MULTI-PURPOSE ENAMEL RUSTOLEUM PRIMER OR EQUIVALENT.
5. APPROXIMATE WEIGHT: 78 LBS.

ITEM	PART NO.	DESCRIPTION	QTY
3	F10022097	TUBE, SQUARE - MITERED ENDS	1
2	F10021703	PLATE, MOUNTING - SLOTTED PLATE FOR COND. WALL SUPPORT	1
1	COML	TUBE, 4X4X1/4" X 18.00 LG A500 GRADE B	1

PARTS LIST

UNLESS OTHERWISE SPECIFIED				
±.X	±.XX	±.XXX	±X/X	±X°
.1	.06	.005	1/16	1°

BREAK ALL SHARP EDGES .015 MAX.
DO NOT SCALE DRAWING
DIMENSIONS BASED ON ASME Y14.5M-1994
MAX. ALL MACH SURFACES 250
DRAWING UNITS: INCHES

DRAWN	J.TILLMAN	DATE	23-May-2014
CHECKED		DATE	
APPROVED		DATE	

USED ON: F10022071

MATERIAL: SEE PARTS LIST

GROUP: Particle Physics Mechanical Support | CAGE CODE: 0U5R6

FERMI NATIONAL ACCELERATOR LABORATORY
UNITED STATES DEPARTMENT OF ENERGY

NAME: ASSEMBLY, WALL SUPPORT STRUCTURE

SCALE	SIZE	DRAWING NUMBER	SHEET	REV
1:4	C	F10021711	1 OF 1	-

DESCRIPTION: ASSEMBLY, COLUMN - condenser support; RH
CATEGORY: ASSEMBLY PROJECT: E974MicroBoone-Utilities

REV	REVISION CONTROL DOCUMENT	DATES	SIGNATURES	
-	F10022320---RCD		DRAWN	
			APPROVED	

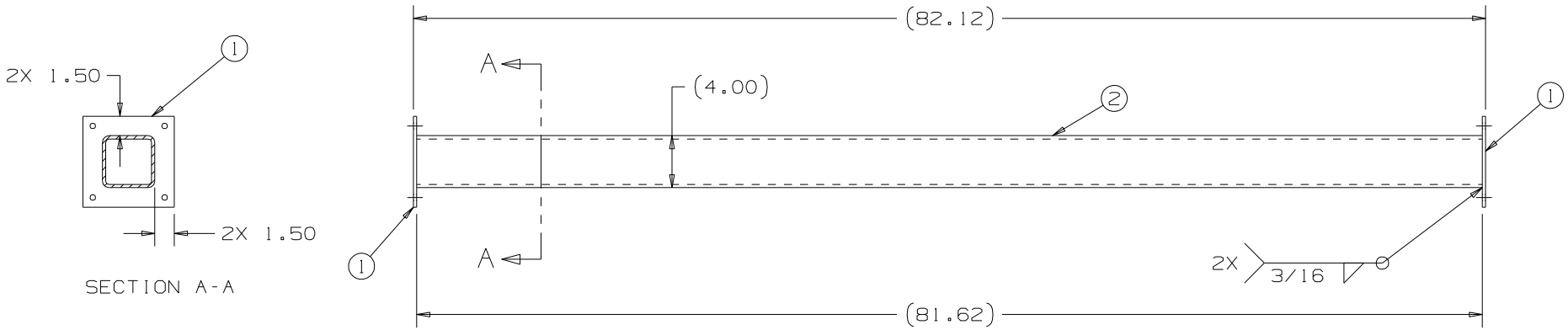

NOTES:
1. ALL WELDMENTS MUST BE IN ACCORDANCE WITH THE STRUCTURAL WELDING CODE ANSI/AWS D1.1
2. ALL WELDS SHALL BE MADE IN A SEQUENCE THAT WILL BALANCE THE APPLIED HEAT AND MINIMIZE DISTORTION AND SHRINKAGE.
3. ALL WELD METALS ARE TO BE E70XX UNLESS OTHERWISE SPECIFIED
4. CLEAN & DEGREASE WELDMENT PRIOR TO PAINTING. PRIME WITH FLAT WHITE 1600 SYSTEM MULTI-PURPOSE ENAMEL RUSTOLEUM PRIMER OR EQUIVALENT.
5. APPROXIMATE WEIGHT: 93 LBS.

ITEM	PART NO.	DESCRIPTION	QTY
2	COML	TUBE, SQUARE - 4X4X1/4; SQUARE CUT ENDS X 81.63 LG A500 GRADE B	1
1	F10021709	PLATE, END - BOLTED END PLATE FOR COND. SUP. POST	2

PARTS LIST

UNLESS OTHERWISE SPECIFIED				
±.X	±.XX	±.XXX	±X/X	±X°
.1	.06	.005	1/16	1°

BREAK ALL SHARP EDGES .015 MAX.
DO NOT SCALE DRAWING
DIMENSIONS BASED ON ASME Y14.5M-1994
MAX. ALL MACH SURFACES 250
DRAWING UNITS: INCHES

DRAWN	J.TILLMAN	DATE	23-May-2014
CHECKED		DATE	
APPROVED		DATE	

USED ON: F10022071

MATERIAL: SEE PARTS LIST

GROUP: Particle Physics Mechanical Support | CAGE CODE: 0U5R6

FERMI NATIONAL ACCELERATOR LABORATORY
UNITED STATES DEPARTMENT OF ENERGY

NAME: ASSEMBLY, COLUMN

SCALE	SIZE	DRAWING NUMBER	SHEET	REV
1:8	B	F10022320	1 OF 1	-

DESCRIPTION: ASSEMBLY, COLUMN - condenser support; LH
CATEGORY: ASSEMBLY PROJECT: E974MicroBoone-Utilities

REV	REVISION CONTROL DOCUMENT	DATES	SIGNATURES	
-	F10022321---RCD		DRAWN	
			APPROVED	

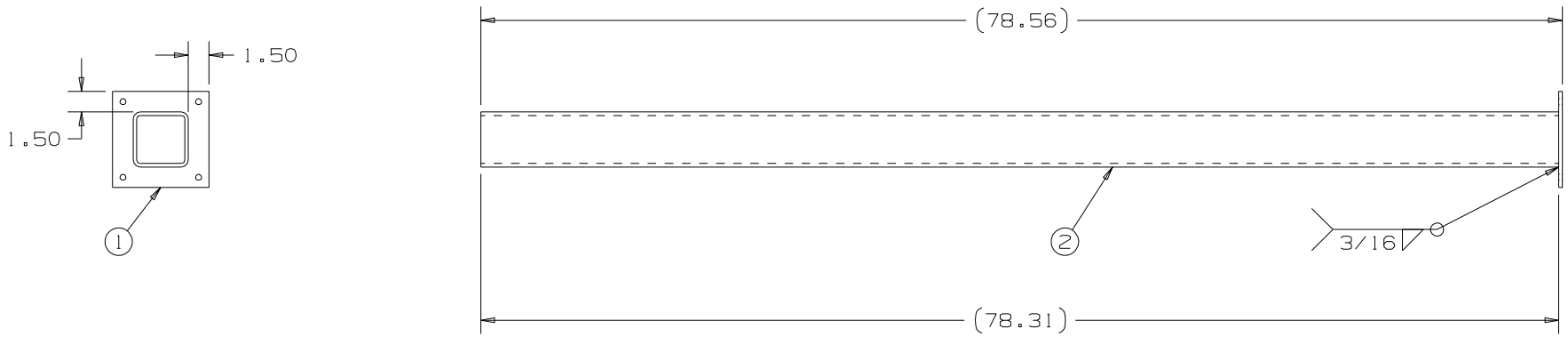

NOTES:
1. ALL WELDMENTS MUST BE IN ACCORDANCE WITH THE STRUCTURAL WELDING CODE ANSI/AWS D1.1
2. ALL WELDS SHALL BE MADE IN A SEQUENCE THAT WILL BALANCE THE APPLIED HEAT AND MINIMIZE DISTORTION AND SHRINKAGE.
3. ALL WELD METALS ARE TO BE E70XX UNLESS OTHERWISE SPECIFIED
4. CLEAN & DEGREASE WELDMENT PRIOR TO PAINTING. PRIME WITH FLAT WHITE 1600 SYSTEM MULTI-PURPOSE ENAMEL RUSTOLEUM PRIMER OR EQUIVALENT.
5. APPROXIMATE WEIGHT: 85 LBS.

ITEM	PART NO.	DESCRIPTION	QTY
2	COML	TUBE, SQUARE - 4X4X1/4; SQUARE CUT ENDS X 78.31 LG A500 GRADE B	1
1	F10021709	PLATE, END - BOLTED END PLATE FOR COND. SUP. POST	1

PARTS LIST

UNLESS OTHERWISE SPECIFIED				
±.X	±.XX	±.XXX	±X/X	±X°
.1	.06	.005	1/16	1°

BREAK ALL SHARP EDGES .015 MAX.
DO NOT SCALE DRAWING
DIMENSIONS BASED ON ASME Y14.5M-1994
MAX. ALL MACH SURFACES 250
DRAWING UNITS: INCHES

DRAWN	J.TILLMAN	DATE	23-May-2014
CHECKED		DATE	
APPROVED		DATE	

USED ON: F10022071

MATERIAL: SEE PARTS LIST

GROUP: Particle Physics Mechanical Support | CAGE CODE: 0U5R6

FERMI NATIONAL ACCELERATOR LABORATORY
UNITED STATES DEPARTMENT OF ENERGY

NAME: ASSEMBLY, COLUMN

SCALE	SIZE	DRAWING NUMBER	SHEET	REV
1:8	B	F10022321	1 OF 1	-

DESCRIPTION: TUBE, SQUARE - MITERED ENDS - 4x4x1/4" x 97.31" lg
CATEGORY: TUBE PROJECT: E974MicroBoone-Utilities

REV	REVISION CONTROL DOCUMENT	DATES	SIGNATURES	
-	F10022075---RCD		DRAWN	
			APPROVED	

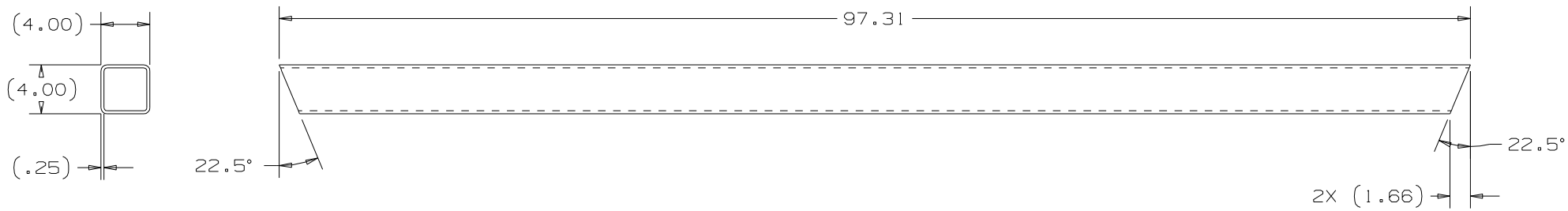

EST. WEIGHT: 98 lbs

UNLESS OTHERWISE SPECIFIED				
±.X	±.XX	±.XXX	±X/X	±X°
.1	.06	.005	1/16	1°

BREAK ALL SHARP EDGES .015 MAX.
DO NOT SCALE DRAWING
DIMENSIONS BASED ON ASME Y14.5M-1994
MAX. ALL MACH SURFACES 250
DRAWING UNITS: INCHES

DRAWN	J.TILLMAN	DATE	27-May-2014
CHECKED		DATE	
APPROVED		DATE	

USED ON
F10022492

MATERIAL
□SQUARE TUBE, 4" X 4" X 1/4" A500 GR B

GROUP: Particle Physics Mechanical Support | CAGE CODE: 0U5R6

FERMI NATIONAL ACCELERATOR LABORATORY
UNITED STATES DEPARTMENT OF ENERGY

NAME
TUBE, SQUARE - MITERED ENDS

SCALE	SIZE	DRAWING NUMBER	SHEET	REV
1:8	B	F10022075	1 OF 1	-

DESCRIPTION: TUBE, SQUARE - MITERED ENDS - 4x4x1/4" x 15.33" lg
CATEGORY: TUBE PROJECT:

REV	REVISION CONTROL DOCUMENT	DATES	SIGNATURES	
-	F10022154---RCD		DRAWN	
			APPROVED	

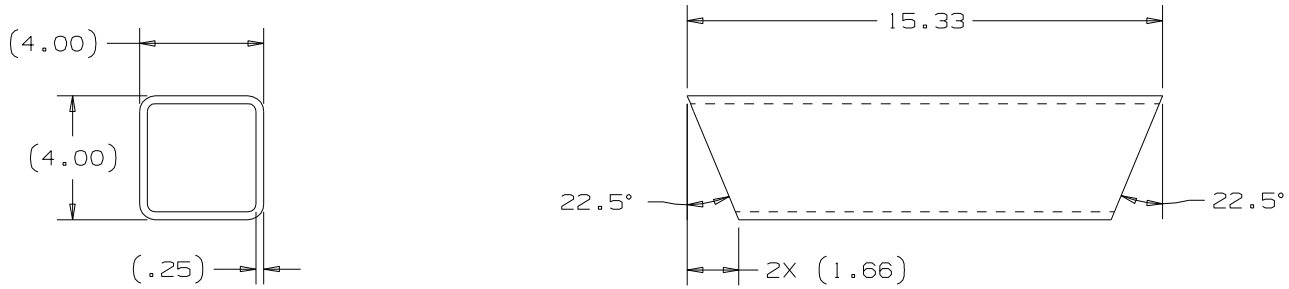

EST. WEIGHT: 14 lbs

UNLESS OTHERWISE SPECIFIED				
±.X	±.XX	±.XXX	±X/X	±X°
.1	.06	.005	1/16	1°

BREAK ALL SHARP EDGES .015 MAX.
DO NOT SCALE DRAWING
DIMENSIONS BASED ON ASME Y14.5M-1994
MAX. ALL MACH SURFACES 250
DRAWING UNITS: INCHES

DRAWN	J.TILLMAN	DATE	28-May-2014
CHECKED		DATE	
APPROVED		DATE	

USED ON
F10022492

MATERIAL
□SQUARE TUBE, 4" X 4" X 1/4" A500 GR B

GROUP: Particle Physics Mechanical Support | CAGE CODE: 0U5R6

FERMI NATIONAL ACCELERATOR LABORATORY
UNITED STATES DEPARTMENT OF ENERGY

NAME
TUBE, SQUARE - MITERED ENDS

SCALE	SIZE	DRAWING NUMBER	SHEET	REV
1:4	B	F10022154	1 OF 1	-

DESCRIPTION: TUBE, SQUARE, MITERED END: 4X4X1/4 drilled
CATEGORY: TUBE PROJECT: E974MicroBoone-Utilities

REV	REVISION CONTROL DOCUMENT	DATES	SIGNATURES	
-	F10022076---RCD		DRAWN	
			APPROVED	

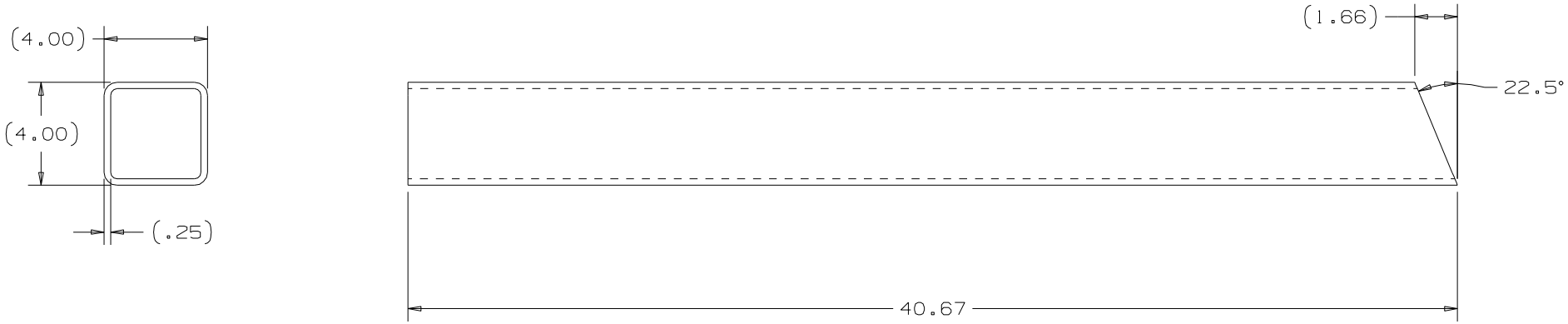

EST. WEIGHT: 41 lbs

UNLESS OTHERWISE SPECIFIED				
±.X	±.XX	±.XXX	±X/X	±X°
.1	.06	.005	1/16	1°

BREAK ALL SHARP EDGES .015 MAX.
DO NOT SCALE DRAWING
DIMENSIONS BASED ON ASME Y14.5M-1994
MAX. ALL MACH SURFACES 250
DRAWING UNITS: INCHES

DRAWN	J.TILLMAN	DATE	27-May-2014
CHECKED		DATE	
APPROVED		DATE	

USED ON
F10022492

MATERIAL
□SQUARE TUBE, 4" X 4" X 1/4" A500 GR B

GROUP: Particle Physics Mechanical Support | CAGE CODE: 0U5R6

FERMI NATIONAL ACCELERATOR LABORATORY
UNITED STATES DEPARTMENT OF ENERGY

NAME
TUBE, SQUARE, MITERED END

SCALE	SIZE	DRAWING NUMBER	SHEET	REV
1:4	B	F10022076	1 OF 1	-

DESCRIPTION: PLATE, MOUNTING - slotted plate for cond. wall support
CATEGORY: PLATE PROJECT: E974MicroBoone-Utilities

REV	REVISION CONTROL DOCUMENT	DATES	SIGNATURES	
-	F10021703---RCD		DRAWN	
			APPROVED	

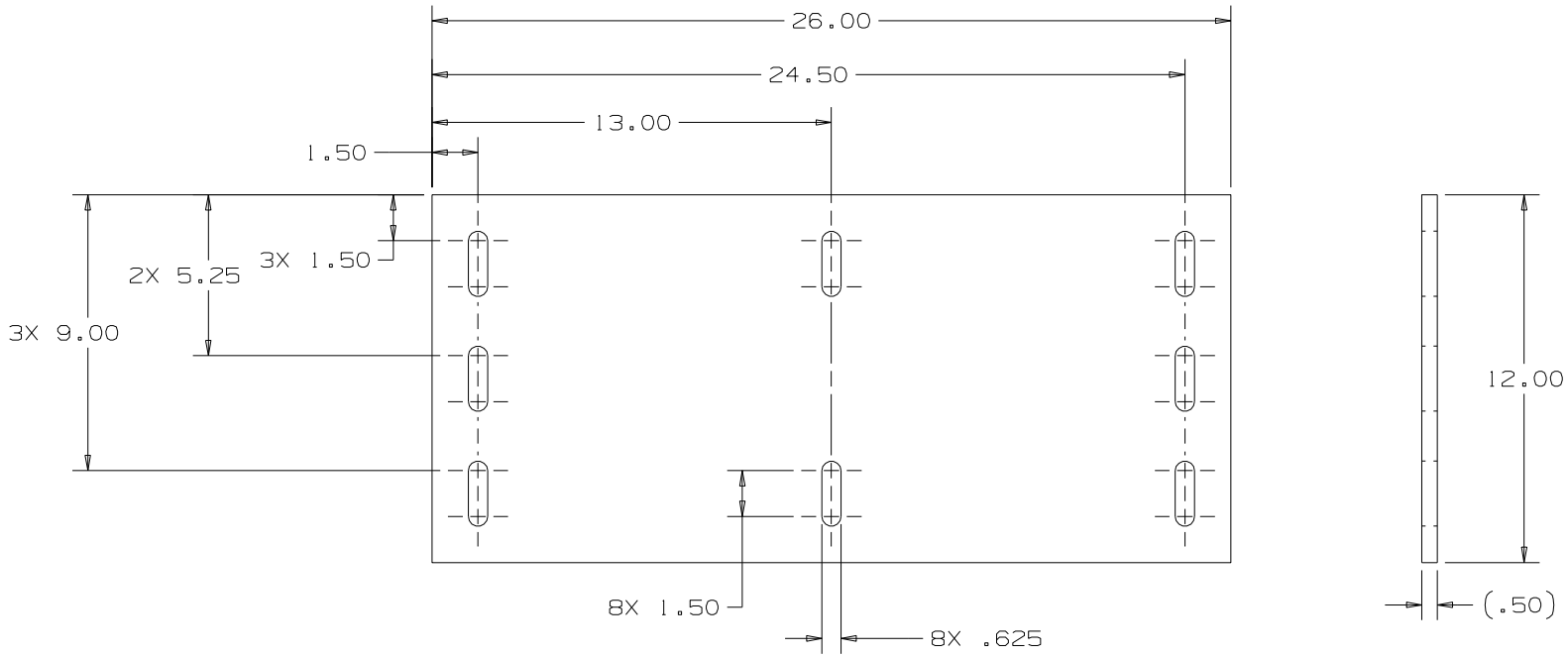

EST. WEIGHT: 43 lbs

UNLESS OTHERWISE SPECIFIED				
±.X	±.XX	±.XXX	±X/X	±X°
.1	.06	.030	1/16	1°

BREAK ALL SHARP EDGES .015 MAX.
DO NOT SCALE DRAWING
DIMENSIONS BASED ON ASME Y14.5M-1994
MAX. ALL MACH SURFACES 250
DRAWING UNITS: INCHES

DRAWN	J.TILLMAN	DATE	23-May-2014
CHECKED		DATE	
APPROVED		DATE	
USED ON	F10021711		
MATERIAL	1/2" A36 PLATE		
GROUP:		CAGE CODE: 0U5R6	

FERMI NATIONAL ACCELERATOR LABORATORY
UNITED STATES DEPARTMENT OF ENERGY

NAME: PLATE, MOUNTING

SCALE	SIZE	DRAWING NUMBER	SHEET	REV
1:4	B	F10021703	1 OF 1	-

DESCRIPTION: TUBE, SQUARE - MITERED ENDS - 4x4x1/4" x 20" lg
CATEGORY: TUBE PROJECT: E974MicroBoone-Utilities

REV	REVISION CONTROL DOCUMENT	DATES	SIGNATURES	
-	F10022097---RCD		DRAWN	
			APPROVED	

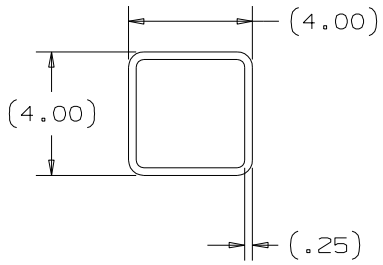

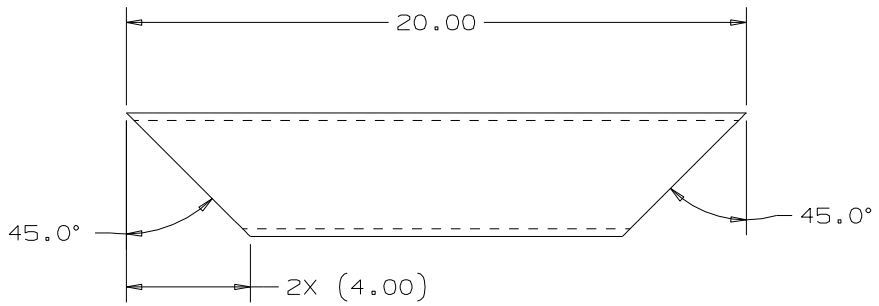

EST. WEIGHT: 16 lbs

UNLESS OTHERWISE SPECIFIED				
±.X	±.XX	±.XXX	±X/X	±X°
.1	.06	.005	1/16	1°

BREAK ALL SHARP EDGES .015 MAX.
DO NOT SCALE DRAWING
DIMENSIONS BASED ON ASME Y14.5M-1994
MAX. ALL MACH SURFACES 250
DRAWING UNITS: INCHES

DRAWN	J.TILLMAN	DATE	23-May-2014
CHECKED		DATE	
APPROVED		DATE	

USED ON
F10021711

MATERIAL
□SQUARE TUBE, 4" X 4" X 1/4" A500 GR B

GROUP: CAGE CODE: 0U5R6

FERMI NATIONAL ACCELERATOR LABORATORY
UNITED STATES DEPARTMENT OF ENERGY

NAME
TUBE, SQUARE - MITERED ENDS

SCALE	SIZE	DRAWING NUMBER	SHEET	REV
1:4	B	F10022097	1 OF 1	-

DESCRIPTION: PLATE, END - bolted end plate for cond. sup. post
CATEGORY: PLATE PROJECT: E974MicroBoone-Utilities

REV	REVISION CONTROL DOCUMENT	DATES	SIGNATURES	
-	F10021709---RCD		DRAWN	
			APPROVED	

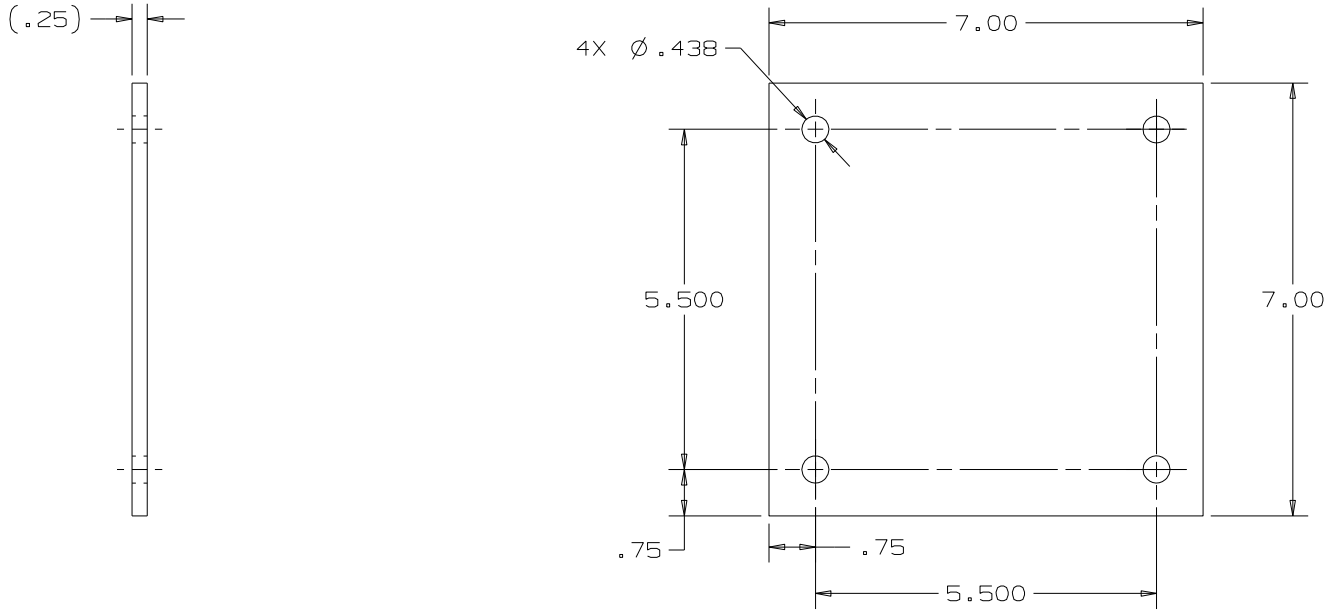

EST. WEIGHT: 3.5 lbs

UNLESS OTHERWISE SPECIFIED				
±.X	±.XX	±.XXX	±X/X	±X°
.1	.06	.03	1/16	1°

BREAK ALL SHARP EDGES .015 MAX.
DO NOT SCALE DRAWING
DIMENSIONS BASED ON ASME Y14.5M-1994
MAX. ALL MACH SURFACES 250
DRAWING UNITS: INCHES

DRAWN	J.TILLMAN	DATE	22-May-2014
CHECKED		DATE	
APPROVED		DATE	

USED ON
F10022320, F10022321, F10022492

MATERIAL
1/4" A36 H.R.

GROUP: Particle Physics Mechanical Support | CAGE CODE: 0U5R6

FERMI NATIONAL ACCELERATOR LABORATORY
UNITED STATES DEPARTMENT OF ENERGY

NAME
PLATE, END

SCALE	SIZE	DRAWING NUMBER	SHEET	REV
1:2	B	F10021709	1 OF 1	-

DESCRIPTION: ANGLE, STRUCTURAL - 4x4x1/4; square cut ends; drilled
CATEGORY: ANGLE PROJECT: E974MicroBoone-Utilities

REV	REVISION CONTROL DOCUMENT	DATES	SIGNATURES	
-	F10022225---RCD		DRAWN	
			APPROVED	

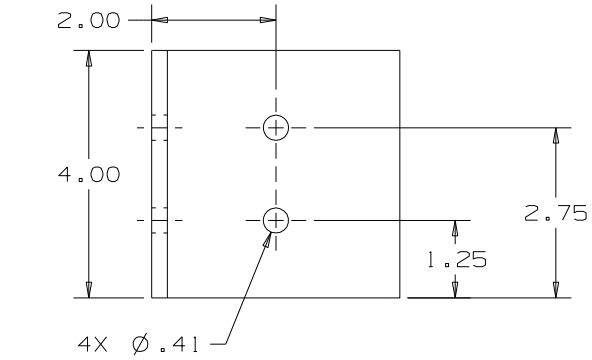

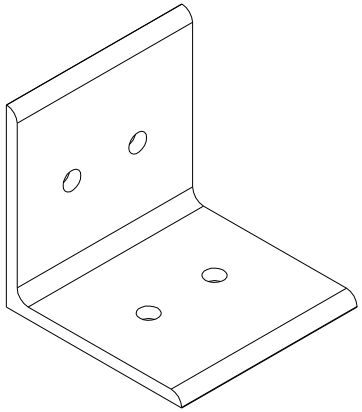

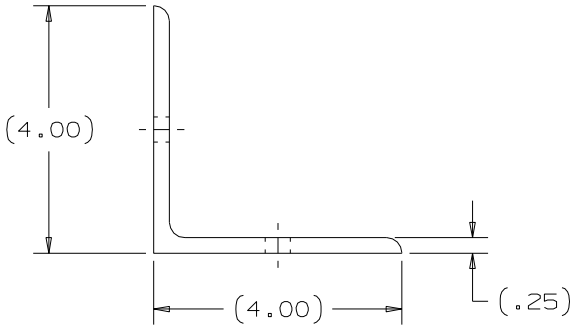

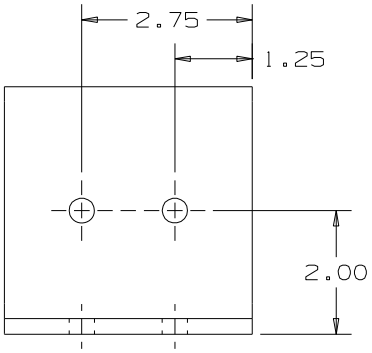

UNLESS OTHERWISE SPECIFIED				
±.X	±.XX	±.XXX	±X/X	±X°
.1	.06	.005	1/16	1°

BREAK ALL SHARP EDGES .015 MAX.
DO NOT SCALE DRAWING
DIMENSIONS BASED ON ASME Y14.5M-1994
MAX. ALL MACH SURFACES 250
DRAWING UNITS: INCHES

DRAWN	J.TILLMAN	DATE	22-May-2014
CHECKED		DATE	
APPROVED		DATE	

USED ON
F10022071

MATERIAL
A36 H.R. STEEL

GROUP: Particle Physics Mechanical Support
CAGE CODE: 0U5R6

FERMI NATIONAL ACCELERATOR LABORATORY
UNITED STATES DEPARTMENT OF ENERGY

NAME
ANGLE, STRUCTURAL

SCALE	SIZE	DRAWING NUMBER	SHEET	REV
1:2	B	F10022225	1 OF 1	-