CDF
CMEX
UPGRADE

STRUCTURAL
AND
MECHANICAL
DESIGN

OUTER
SUPPORTING
FRAME

Outer Supporting Frame

The blue, outer supporting frame became a necessity when three additional chambers were added to the original six. A nine member conical frame by itself was incapable of bearing the high stresses associated with this new loading configuration. Additional supporting steel was needed and for simplicity, an extension of the preexisting frame was designed.

The outer support frame was first analyzed to determine how much deflection would occur under only its own weight. It was found that in the X, Y, Z, directions respectively, the displacements were: -.828", -.826", -.811" at the top, outermost point. The maximum stress occurred on element # 237 and was 5464 psi (combined stress).

Since the outer frame was being relied on to support the inner conical frame, the outer frame was analyzed separately with concentrated loads representing the individual conical frame sections and muon chambers. Gravitational effects were also applied. The maximum stressed element was element # 237 with a combined stress of 17,520 psi. In reality, these stresses would be much lower because the inner conical frame would, with the outer frame, act as one frame and would be much stronger and rigid. The maximum displacements at the top, outermost point in the X, Y, Z directions respectively were: -2.765", -2.777", -2.706".

Maximum allowable stresses were calculated using KL/r criteria for tube sections and angle brackets in the supporting frame. All maximum frame stresses were calculated to be below allowable stress.

Weld calculations were performed on TS 10x6x1/2 and TS 6x6x1/2 members. Joint # 236 was the worst connection of two TS 10x6x1/2 beams. Attached calculations determine the adequate weld size to be 1/8" full penetration. It should be noted that 1/4" all-around full penetration welds will be utilized for construction. The same 1/4" welds will be used on all TS 6x6x1/2 connections even though it was calculated that 1/16" welds were adequate.

Again it should be emphasized that these calculations were based on the assumption that the inner, conical frame was contributing nothing to the strength and rigidity of the entire combined structure. This was done to show that the outer structure was capable of securely supporting the non-typical loading scheme found in CMEX, so that even during periods of construction or adjustment of the inner frame, the entire structure will not fail.

Outer Supporting Frame	Calculations for Maximum Allowable Stress	Don Mitchell x4710 9/25/91

KL/r method to determine maximum allowable stress:

ON TS 10 x 6 x 1/2 : Vertical Columns

Maximum unsupported length = 38"

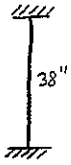

TS 10 x 6 x 1/2
K = .65
r = 2.37

$$\frac{KL}{r} = \frac{(.65)(38)}{2.37} = 10.42$$

For $F_y = 36$ KSI, $F_a = 21.16$ KSI

For $F_y = 50$ KSI, $F_a = 29.26$ KSI

By interpolation, F_a at $F_y = 46$ KSI is 26.95 KSI

$$\boxed{F_a = 26,950 \text{ psi}}$$

ON TS 6 x 6 x 1/2 : Vertical Columns Cross-bracing

maximum unsupported length = 48.5"

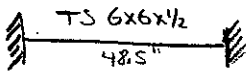

K = .65
r = 2.21

$$\frac{KL}{r} = \frac{(65)(48.5)}{2.21} = 14.26$$

For $F_y = 36$ KSI, $F_a = 20.95$ KSI

For $F_y = 50$ KSI, $F_a = 28.90$ KSI

By interpolation, F_a at $F_y = 46$ KSI is 26.63 KSI

$$\boxed{F_a = 26,630 \text{ psi}}$$

ON TS 10 x 6 x 1/2 : Boom Rigging; maximum stress = 7,670 psi

Unsupported length = 82.28"

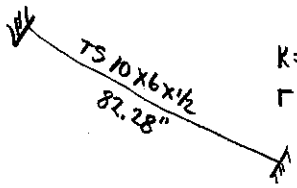

K = .65
r = 2.37

$$\frac{KL}{r} = \frac{(65)(82.28)}{2.37} = 22.57$$

For $F_y = 36$ KSI, $F_a = 20.41$ KSI

For $F_y = 50$ KSI, $F_a = 27.97$ KSI

By interpolation, F_a at $F_y = 46$ KSI is 25.81 KSI

$$\boxed{F_a = 25,810 \text{ psi}}$$

$$\left.\begin{array}{l} F_{max} = 7,670 \text{ psi} \\ F_a = 25,810 \text{ psi} \end{array}\right\} \therefore \text{ all elements in Boom are } \underline{\text{OK}}$$

ON L 3x3x5/16 : Cross-brace members

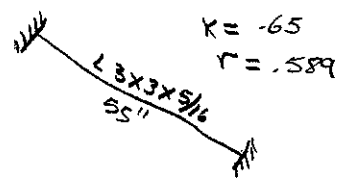

K = .65
r = .589

Maximum unsupported length = 55"

$$\frac{KL}{r} = \frac{(.65)(55)}{.589} = 60.69$$

For F_y = 36 KSI, F_a = 17.33 KSI

$$\boxed{F_a = 17{,}330 \text{ psi}}$$

To limit the number of calculations and to take a conservative approach, maximum forces and maximum moments will be assumed to be acting all on one TS 10x6x1/2 member:

Maximum Forces

$F_x = 16{,}670$ lbs

$F_y = 19060$ lbs

$F_z = 2136$ lbs

Maximum Moments

$m_x = 33430$ in-lb

$m_y = 168{,}400$ in-lb

$m_z = 457{,}800$ in-lb

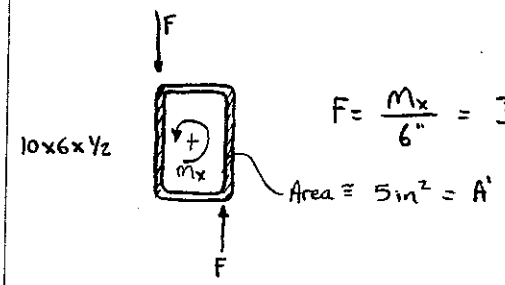

$$F = \frac{m_x}{6''} = \frac{33430}{6} = 5572 \text{ lbs}$$

total area = 14.4 in²

$S_y = 26.9$ in³

$S_z = 36.2$ in³

Stress Calculations:

$\sigma_x = 16670/14.4 = 1156$ psi

$\sigma_y = m_y/S_y = 168{,}400/26.9 = 6260$ psi

$\sigma_z = m_z/S_z = 457{,}800/36.2 = 12646$ psi

$\tau_y = F_y/A = 19060/14.4 = 1324$ psi

$\tau_z = F_z/A = 2136/14.4 = 148$ psi

$\tau_t = F/A' = 5572/5 = 1114$ psi

$$\sigma_{max} = \sqrt{(\sigma_x + \sigma_y + \sigma_z)^2 + (\tau_y + \tau_t)^2 + (\tau_z + \tau_t)^2}$$

$$\sigma_{max} = \sqrt{(1156 + 6260 + 12646)^2 + (1324 + 1114)^2 + (148 + 1114)^2}$$

$\sigma_{max} = 20249$ psi $< F_a = .6F_y = 27{,}600$ psi **OK** extremely Conservative

CSF: CIMEX UPGRADE Outer Supporting Frame	Stress Calculations on TS 6x6x½ members	Don Mitchell x4710 9/24/91

To limit the number of calculations and to make a conservative approach, maximum forces and maximum moments will be assumed to be acting all on one TS 6x6x½ member.

Maximum Forces

$F_x = 2488$ lbs

$F_y = 797$ lbs

$F_z = 613$ lbs

Maximum Moments

$M_x = 8435$ in-lb

$M_y = 9561$ in-lb

$M_z = 21910$ in-lb

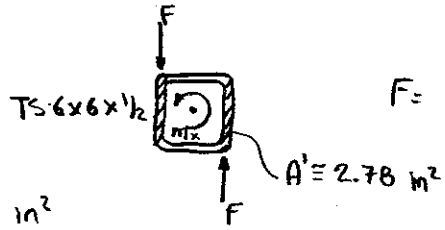

$$F = \frac{M_x}{6} = \frac{8435}{6} = 1406 \text{ lbs}$$

total area = 10.4 in²

$S_y = S_z = 16.8 \text{ in}^3$

Stress Calculations:

$\sigma_x = F_x/A = 2488/10.4 = 239$ psi

$\sigma_y = M_y/S_y = 9561/16.8 = 569$ psi

$\sigma_z = M_z/S_z = 21910/16.8 = 1304$ psi

$\tau_y = F_y/A = 797/10.4 = 77$ psi

$\tau_z = F_z/A = 613/10.4 = 59$ psi

$\tau_t = F/A' = 1406/2.78 = 506$ psi

$$\sigma_{max} = \sqrt{(\sigma_x + \sigma_y + \sigma_z)^2 + (\tau_y + \tau_t)^2 + (\tau_z + \tau_t)^2}$$

$$\sigma_{max} = \sqrt{(239 + 569 + 1304)^2 + (77 + 506)^2 + (59 + 506)^2}$$

$\sigma_{max} = 2263$ psi $< F_a = .6F_y = 27{,}600$ psi **OK** conservative

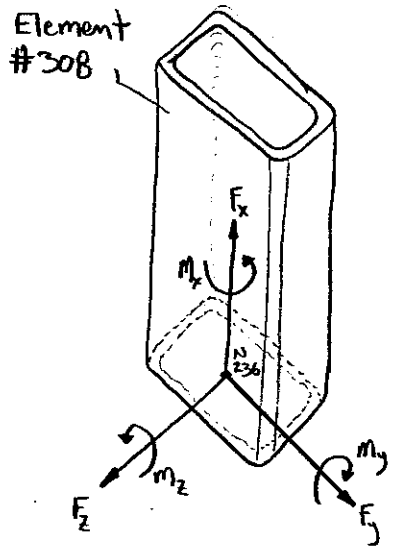

Although many "NODES" are used to model the TS 10 x 6 x 1/2 members, there are actually few, real welded connections of TS 10 x 6 x 1/2 members. The worst member is element #308 at joint # 236

$F_{x_{max}}$ = 7556 lbs $M_{x_{max}}$ = 47030 in-lb

$F_{y_{max}}$ = 15020 lbs $M_{y_{max}}$ = 13640 in-lb

$F_{z_{max}}$ = 112 lbs $M_{z_{max}}$ = 175,400 in-lb

Global Forces and Moments

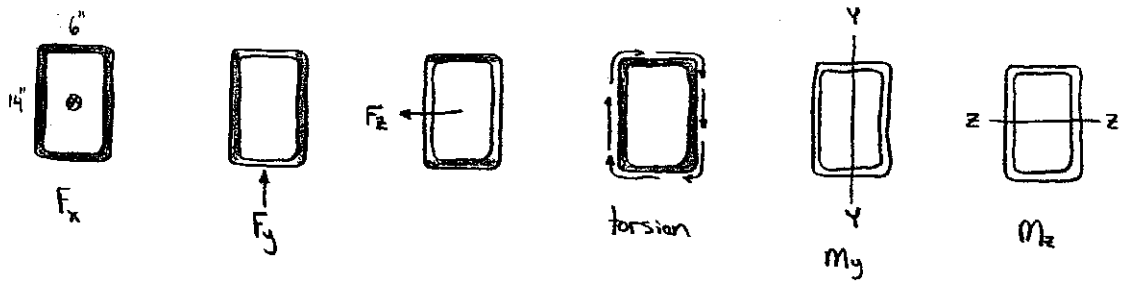

$$S_z = (6)(14) + \frac{14^2}{3} = 149.3$$

$$S_y = (14)(6) + \frac{6^2}{3} = 96$$

$$I_p = \frac{(14+6)^3}{6} = 1333.3$$

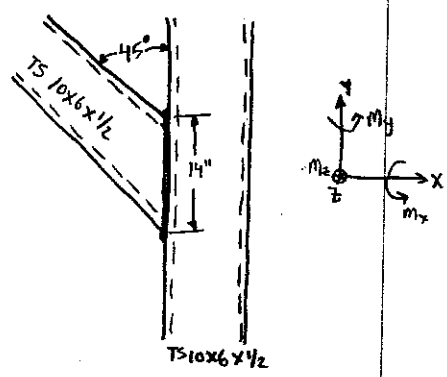

$$f_x = \frac{F_x}{40''} = \frac{7556}{40} = 188.9 \text{ lb/in}$$

$$f_y = \frac{F_y}{28''} = \frac{15020}{28} = 536 \text{ lb/in}$$

$$f_z = \frac{F_z}{12''} = \frac{112}{12} = 9 \text{ lb/in}$$

$$f_{t_x} = \frac{M_x Y}{I_p} = \frac{(47030)(7)}{1333.3} = 247 \text{ lb/in}$$

$$f_{t_y} = \frac{M_x X}{I_p} = \frac{(47030)(3)}{1333.3} = 106 \text{ lb/in}$$

$$f_{x'} = \frac{M_y}{S_y} = \frac{13640}{96} = 142 \text{ lb/in}$$

$$f_{x''} = \frac{M_z}{S_z} = \frac{175400}{149.3} = 1175 \text{ lb/in}$$

$$f_{total} = \sqrt{(f_x + f_{x'} + f_{x''})^2 + (f_y + f_{ty})^2 + (f_z + f_{tx})^2}$$

$$f_{total} = \sqrt{(188.9 + 142 + 1175)^2 + (536 + 106)^2 + (9 + 106)^2}$$

$$f_{total} = 1641 \text{ lb/in} = 1.64 \text{ Kips/in}$$

For E70 Weld, 1/8" weld is good for 1.86 Kips/in

∴ a 1/4" full penetration weld is adequate

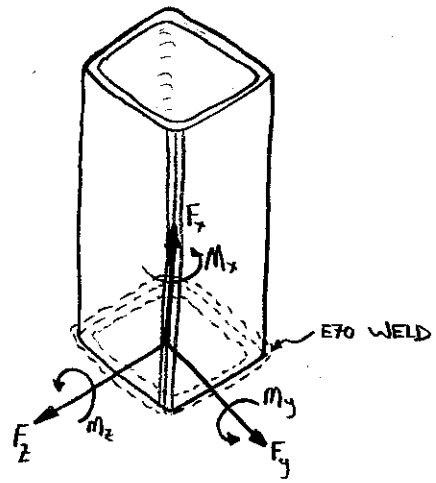

The extreme worst case would be if maximum forces and moments out of all TS 6x6x1/2 members were used.

$F_{x_{max}} = 2488$ lbs	$M_{x_{max}} = 8435$ in-lb
$F_{y_{max}} = 797$ lbs	$M_{y_{max}} = 9561$ in-lb
$F_{z_{max}} = 613$ lbs	$M_{z_{max}} = 21910$ in-lb

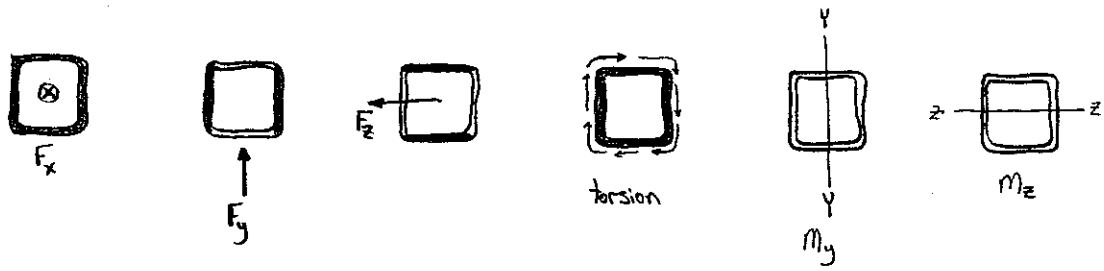

$$S_y = S_z = (6)(6) + \frac{(6)^2}{3} = 48$$

$$I_p = \frac{(6+6)^3}{6} = 288$$

$$f_x = \frac{F_x}{24} = \frac{2488}{24} = 103.7 \text{ lb/in}$$

$$f_y = \frac{F_y}{12} = \frac{797}{12} = 66.4 \text{ lb/in}$$

$$f_z = \frac{F_z}{12} = \frac{613}{12} = 51.1 \text{ lb/in}$$

$$f_{t_x} = \frac{M_x Y}{I_p} = \frac{(8435)(3)}{288} = 87.9 \text{ lb/in}$$

$$f_{t_y} = \frac{M_x X}{I_p} = \frac{(8435)(3)}{288} = 87.9 \text{ lb/in}$$

$$f_{x'} = \frac{M_y}{S_y} = \frac{9561}{48} = 199.2 \text{ lb/in}$$

$$f_{x''} = \frac{M_z}{S_z} = \frac{21910}{48} = 456.5 \text{ lb/in}$$

$$f_{total} = \sqrt{(f_x + f_{x'} + f_{x''})^2 + (f_y + f_{t_y})^2 + (f_z + f_{t_x})^2}$$

$$f_{total} = \sqrt{(103.7 + 199.2 + 456.5)^2 + (66.4 + 87.9)^2 + (51.1 + 87.9)^2}$$

$$f_{total} = 787.29 \text{ lb/in} = .787 \text{ Kips/in}$$

For E70 weld, 1/16" weld is good for .93 Kip/in

∴ a 1/4" Full penetration weld is adequate.

This analysis is in response to the question raised by the Safety Review panel for the CDF/CMEX UPGRADE in regards to the gusseted flange connection between the upper and lower portions of the outer support frame.

The question was: Has the gusset thickness been designed correctly, and where did the 85% safety factor come from?

Answer:

There was a flaw in calculating the gusset load. To be ultra-conservative, the entire load was assumed to act on one gusset instead of two gussets. Also, a resistance factor of .85 was used instead of a .6 value. Because of these two mistakes, another analysis is attached along with an extract from "STEEL STRUCTURES, Design and Behavior."

As stated in "STEEL STRUCTURES, Design and Behavior," the governing equation for determining gusset size is:

$$L' = .85\, F_y\, Z\, b\, t$$

where L' = load
t = gusset thickness
Z = geometric constant
F_y = yield stress

The .85 value is the resistance factor for compression members and is given on page 32 of this reference. This reference claims that ".85" comes from an ANSI standard. However, for this design a .6 value will be used.

Therefore,

$$L' = .6\, F_y\, Z\, b\, t$$

where $Z = 1.39 - 2.2\left(\frac{b}{a}\right) + 1.27\left(\frac{b}{a}\right)^2 - .25\left(\frac{b}{a}\right)^3$

and the geometry is as shown:

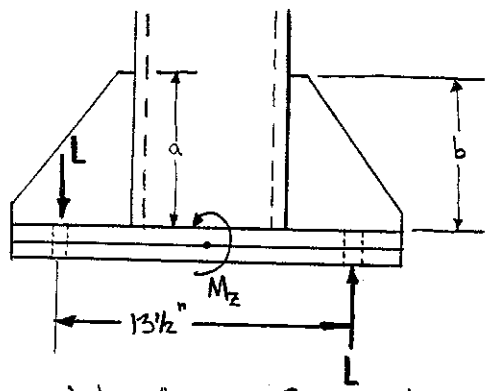

M_z = 403,700 in-lb at Node #248 (case 2)

$Ld = M_z$

$$L = \frac{M_z}{d} = \frac{403{,}700 \text{ in-lb}}{13.5 \text{ in}} = 29{,}904 \text{ lbs}/2 \text{ gussets}$$

$$L' = \frac{L}{2} \equiv \text{Load per gusset}$$

$$L' = \frac{29{,}904 \text{ lbs}}{2} = 14{,}952 \text{ lbs}/\text{gusset}$$

Calculate gusset thickness (t) by using $L' = .6 F_y Z b t$

Given: $L' = 14{,}952$ lbs Find t
$a = 5$ in
$b = 4$ in
$F_y = 36{,}000$ psi

$t = .5497$ in

$\boxed{\text{use } t = 3/4'' \quad \text{A36 steel for gusset design.}}$

Also, it should be noted that the weld group on this connection is strong enough to handle the entire force and moment load configuration without the need for gussets. The 12"x16" flange connection plates are also thick enough and strong enough to not be overstressed even without the gussets.

The gussets have been added to <u>ensure</u> superior added strength for a crucial joint and to raise the factor of safety above and beyond the neccessary requirements.

ENGINEERING NOTE

NAME Don Mitchell x4710

DATE

REVISION DATE

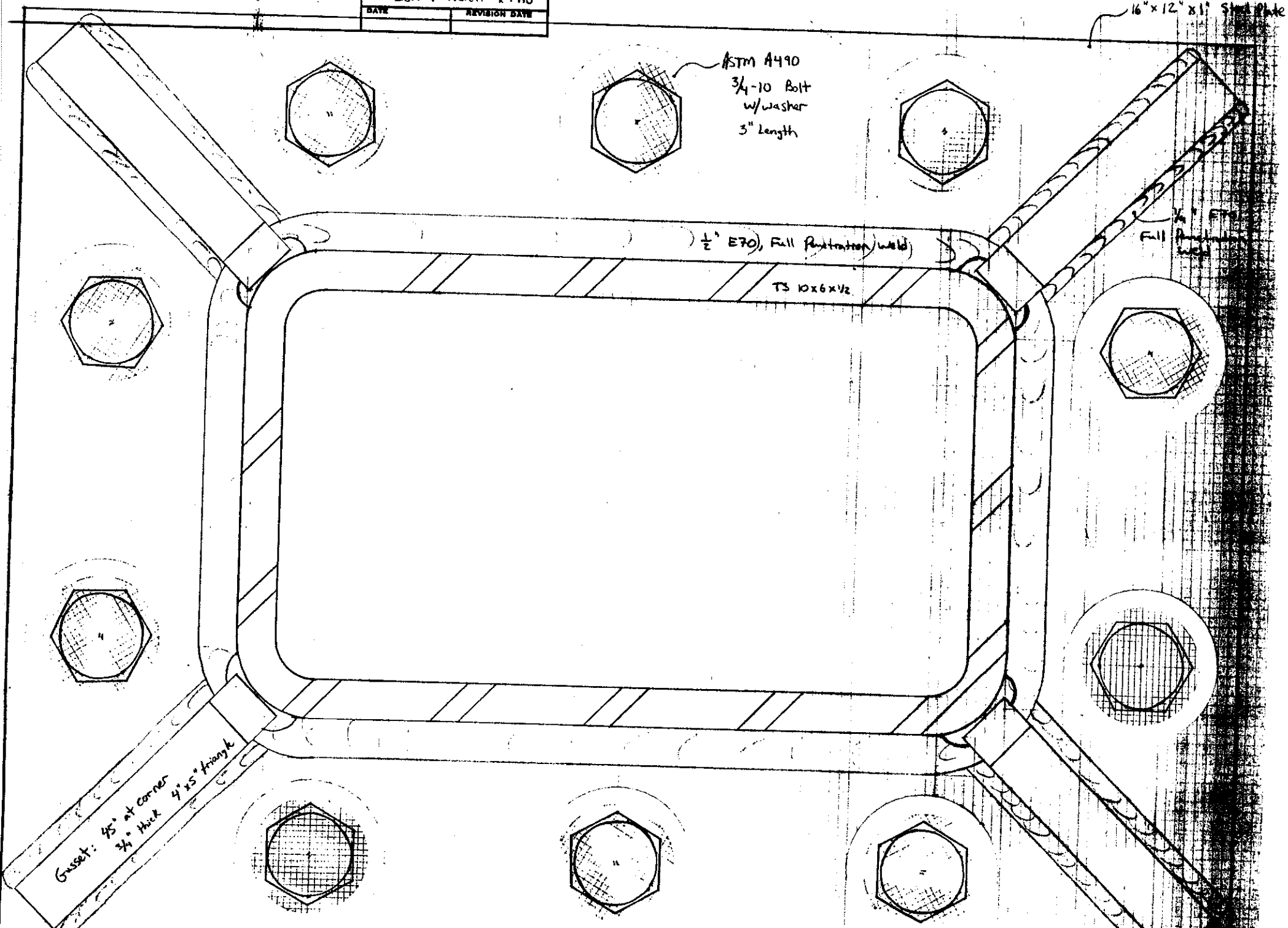

CDF CMEX UPGRADE Outer Support Frame	Outer Frame TS 10x6x1/2 Spliced Joint	Don Mitchell x4710

[Reprint of original weld calculations]

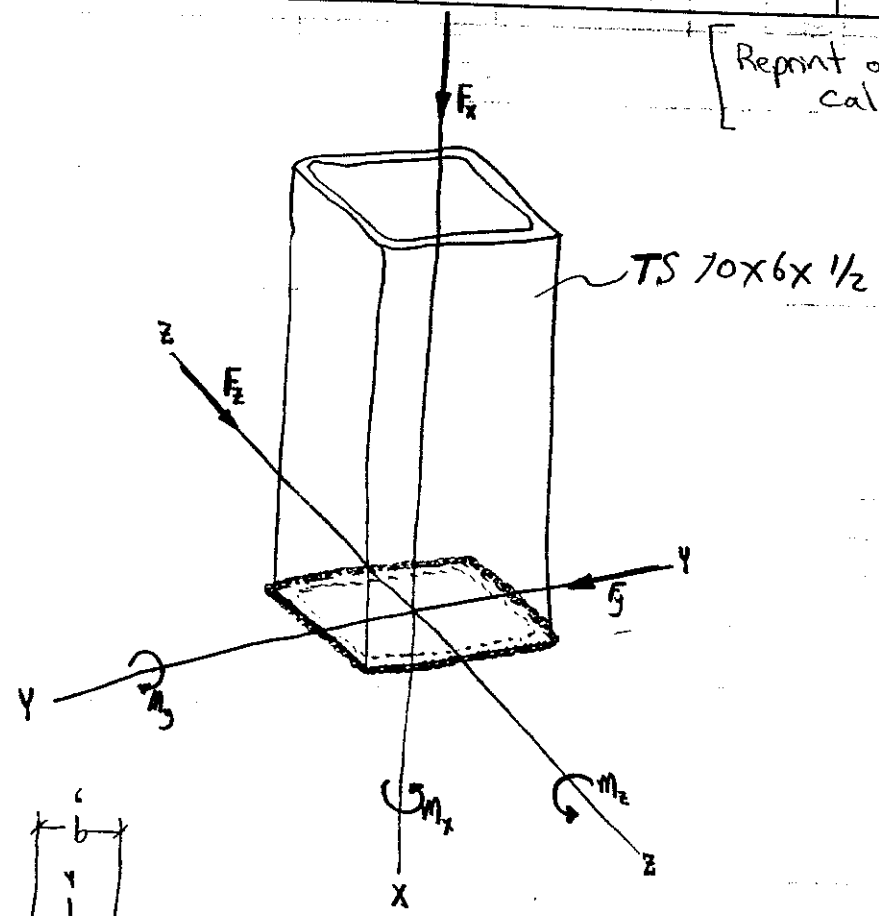

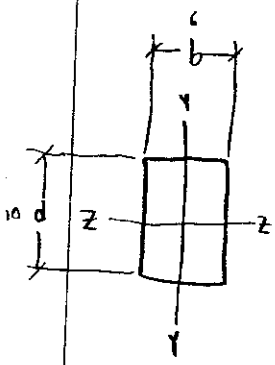

$$S = bd + \frac{d^2}{3} \qquad I_p = \frac{(b+d)^3}{6}$$

$$S_z = (6)(10) + \frac{10^2}{3} = 93.33$$

$$S_y = (6)(10) + \frac{6^2}{3} = 72$$

$$I_p = \frac{(6+10)^3}{6} = 682.67$$

$$f_x = \frac{13060}{32} = 408.125 = \frac{F_x}{L_T}$$

$$f_y = \frac{2363}{20} = 118.15 = \frac{F_y}{L_y}$$

$$f_z = \frac{1278}{12} = 106.5 = \frac{F_z}{L_z}$$

$$f_{x'} = \frac{M_y}{S_y} = \frac{168400}{72} = 2338.8$$

$$f_{x''} = \frac{M_z}{S_z} = \frac{403700}{93.33} = 4325.5$$

$$f_{t_z} = \frac{M_x y}{I_p} = \frac{(26410)(5)}{682.67} = 193.43$$

$$f_{t_y} = \frac{M_x z}{I_p} = \frac{(26410)(3)}{682.67} = 116.$$

$$\sigma_c = \sqrt{(f_x + f_{x'} + f_{x''})^2 + (f_y + f_{t_y})^2 + (f_z + f_{t_z})^2}$$

$$\sigma_c = \sqrt{(408.125 + 2338.8 + 4325.5)^2 + (118.15 + 193.43)^2 + (106.5 + 193.43)^2}$$

$$\sigma_c = 7085.6 \text{ lb/in} = 7.085 \text{ Kip/in}$$

E70 WELD Requires 1/2" weld for 7.42 Kip/in

USE E70 1/2" Full Penetration Weld

CDF: CMEX UPGRADE | Outer Frame Spliced Joint Connection (Plate thickness) | Don Mitchell x4710 10/3/91

Outer Support Frame

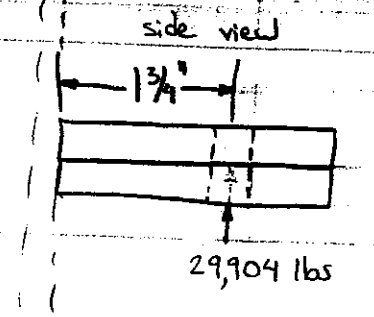

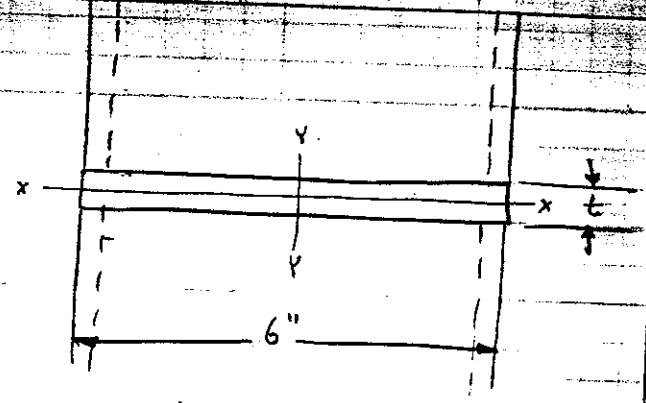

$M = (1.75)(29{,}904)$

$M = 52{,}332$ in-lb

$I_x = \frac{1}{12}(6)(t^3)$ $\quad c_y = \frac{t}{2}$

$$\sigma_{max} = \frac{M c_y}{I_x} = \frac{(52332)(\frac{t}{2})}{\frac{1}{12}(6)(t^3)}$$

$$\sigma_{max} = \frac{(52332)(\frac{t}{2})(12)}{6\,t^3}$$

$$\sigma_{max} = \frac{52332}{t^2}$$

$$t = \sqrt{\frac{52332}{\sigma_{max}}}$$

$$t = \sqrt{\frac{52332}{21{,}600}}$$

$$t = 1.5565"$$

<u>Design:</u> each plate should be 1" thick so that the combined thickness is 2".

[Reprint of plate thickness Calculations]

Load and Resistance Factor Design (LRFD)

As discussed in Sec. 1.8, the factors for overload are variable depending upon the type of load, and the factored load combinations that must be considered are those given by the ANSI Standard [1.2] and LRFD-A4.1, and presented as Eqs. 1.8.2 through 1.8.7. The other part of the safety-related provisions is the ϕ factor, known as the *resistance factor*. The resistance factor ϕ varies with the type of member and with the limit state being considered. Some representative resistance factors ϕ are as follows:

Tension Members (LRFD-D1)

$\phi_t = 0.90$ for *yielding* limit state

$\phi_t = 0.75$ for *fracture* limit state

Compression Members (LRFD-E2)

$$\phi_c = 0.85$$

Beams (LRFD-F1.2)

$$\phi_b = 0.90$$

Welds (LRFD-Table J2.3)

ϕ = same as for type of action; i.e., tension, bending, etc.

Fasteners (A325 bolts) (LRFD-Table J3.2)

$\phi = 0.75$ for tensile strength

$\phi = 0.65$ for shear strength

In order to establish adequate safety using probabilistic methods the natural logarithm of the resistance R divided by the load Q, that is, $\ln(R/Q)$ as shown in Fig. 1.8.2, may be treated as a random variable and is simpler than working with two groups (R and Q) of random variables as in Fig. 1.8.1. When $\ln(R/Q) < 0$, the limit state has been exceeded, and the shaded area in Fig. 1.8.2 is the probability of this event. The method used to develop LRFD uses the *mean values* R_m and Q_m and the *standard deviations* σ_R and σ_Q of the resistance and load, respectively. Frequently, the mean values and standard deviations can be estimated while the actual distributions cannot be obtained. Thus, using the quantities that may be estimated the standard deviation σ of the $\ln(R/Q)$ may be approximated as

$$\sigma_{\ln(R/Q)} \approx \sqrt{V_R^2 + V_Q^2} \tag{1.9.3}$$

where $V_R = \sigma_R/R_m$
$V_Q = \sigma_Q/Q_m$

The margin of safety is the distance from the origin to the mean, as shown in Fig. 1.8.2, and is expressed as a multiple β of $\sigma_{\ln(R/Q)}$. The distance

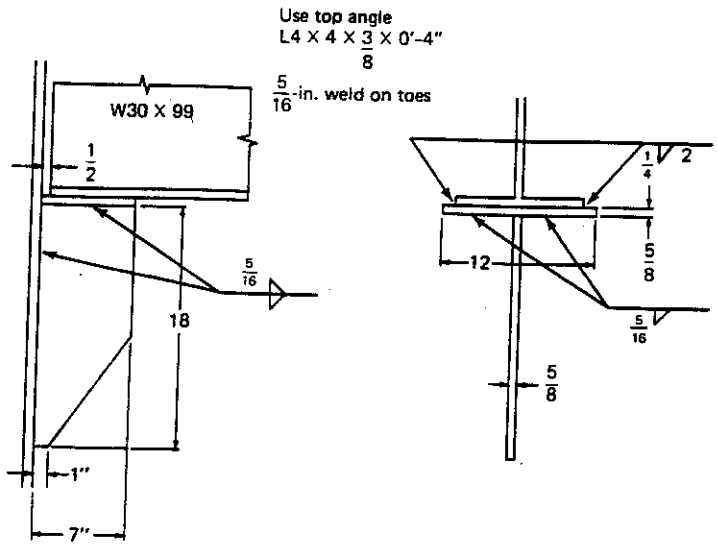

Figure 13.4.5 Design for Example 13.4.1.

Use $\frac{5}{16}$-in. weld with $L = 18$ in. Use stiffener plate, $\frac{5}{8} \times 7 \times 1'\text{-}6''$; and seat plate $\frac{5}{8} \times 7 \times 1'\text{-}0''$. The seat plate width equals the flange width (10.45 in.) plus enough to easily make the welds (approx. 4 times the weld size is often used). The final design is shown in Fig. 13.4.5.

13.5 TRIANGULAR BRACKET PLATES

When the stiffener for a bracket is cut into a triangular shape, as in Fig. 13.4.3b, the plate behaves in a different manner than when the free edge is parallel to the direction of applied load in the region where the greatest stress

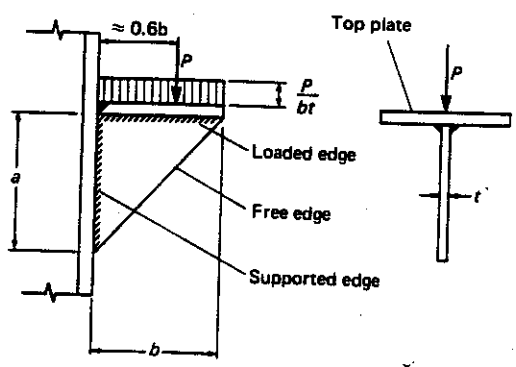

Figure 13.5.1 Triangular bracket plate.

occurs, as in Fig. 13.4.5. The triangular bracket plate arrangement and notation are shown in Fig. 13.5.1.

The behavior of triangular bracket plates has been studied analytically by Salmon [13.29] and experimentally by Salmon, Buettner, and O'Sheridan [13.30] and design suggestions have been proposed by Beedle et al. [13.31]. For small stiffened plates to support beam reactions there is little danger of buckling or failure of the stiffener if cut into a triangular shape. In general, it provides a stiffer support when so cut than if left with a rectangular shape.

Most Exact Analysis and Design Recommendations

For many years design of such brackets was either empirical without benefit of theory or tests, or when in doubt, angle or plate stiffeners were used along the diagonal edge. The recommendations presented here are based on certain assumptions: (1) the top plate is solidly attached to the supporting column; (2) the load P is distributed (though not necessarily uniformly) and has its centroid at approximately $0.6b$ from the support; and (3) the ratio b/a, loaded edge to supported edge, lies between 0.50 and 2.0.

The original theoretical analysis was concerned with elastic buckling; however, the experimental work showed that triangular bracket plates have considerable post-buckling strength. Yielding along the free edge frequently occurs prior to buckling, at which point redistribution of stresses occurs. A considerable margin of safety against collapse was observed indicating the ultimate capacity may be expected to be at least 1.6 times the buckling load.

The maximum stress was found to occur at the free edge; however, because of the complex nature of the stress distribution, the stress on the free edge is not obtainable by any simple process. Because of this difficulty, a ratio z was established between the average stress, P/bt, on the loaded edge to the maximum stress f_{max} on the free edge. The original theoretical expression [13.29] for z was revised as a result of the tests [13.30] which conformed closely to what one could realistically expect in practice. The relationship is given [13.30] as

$$z = \frac{P/bt}{f_{max}} = 1.39 - 2.2\left(\frac{b}{a}\right) + 1.27\left(\frac{b}{a}\right)^2 - 0.25\left(\frac{b}{a}\right)^3 \qquad (13.5.1)$$

which for practical purposes may be obtained from Fig. 13.5.2.

The nominal strength P_n when the free edge reaches the yield stress is

$$P_n = F_y zbt \qquad (13.5.2)$$

For the plate buckling limit state, the width/thickness ratio b/t must be restricted in accordance with a relationship of the type of Eq. 6.16.4,

$$\frac{b}{t} \leq \frac{\text{constant}}{\sqrt{F_y}} \qquad (13.5.3)$$

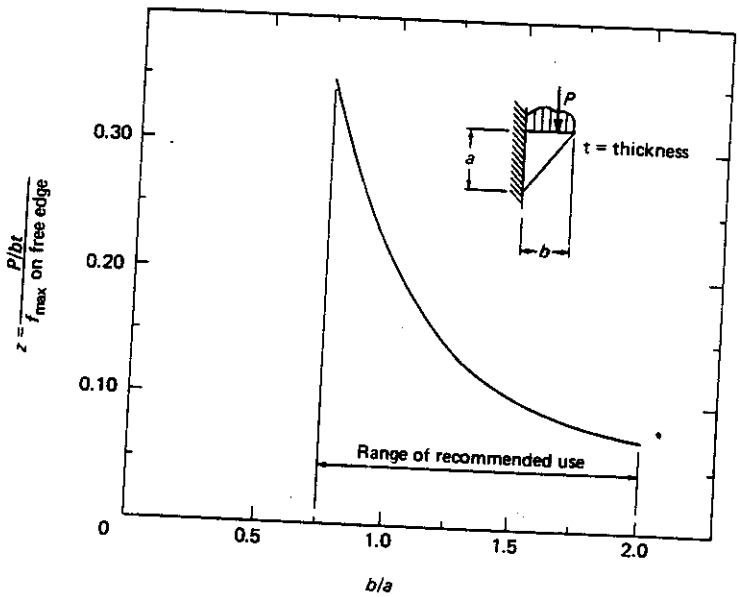

Figure 13.5.2 Coefficient used to obtain maximum stress on free edge.

Figure 13.5.3 gives the variation in $(b/t)\sqrt{F_y}$ with b/a for the theoretical studies [13.29] (fixed and simply supported), the welded bracket tests result [13.30], and the authors' suggested design curve. The design requirement may be expressed (with F_y in ksi) as

$$\text{For } 0.5 \geq \frac{b}{a} \leq 1.0; \qquad \frac{b}{t} \leq \frac{250}{\sqrt{F_y}} \tag{13.5.4a)*}$$

$$\text{For } 1.0 \leq \frac{b}{a} \leq 2.0; \qquad \frac{b}{t} \leq \frac{250(b/a)}{\sqrt{F_y}} \tag{13.5.4b)*}$$

Satisfying the above limits means that yielding along the *diagonal free edge* will occur prior to buckling, and with conservatism compared to the welded tests, as shown by Fig. 13.5.3.

---

*For SI units, with F_y in MPa,

$$\text{For } 0.5 \leq \frac{b}{a} \leq 1.0; \qquad \frac{b}{t} \leq \frac{656}{\sqrt{F_y}} \tag{13.5.4a}$$

$$\text{For } 1.0 \leq \frac{b}{a} \leq 2.0; \qquad \frac{b}{t} \leq \frac{656(b/a)}{\sqrt{F_y}} \tag{13.5.4b}$$

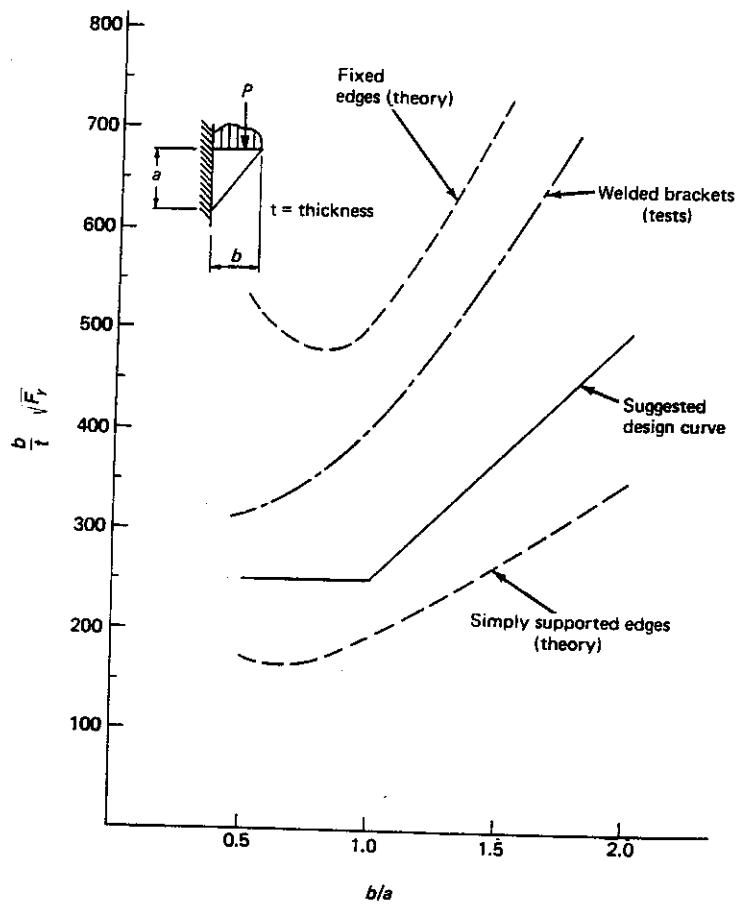

Figure 13.5.3 Critical b/t values so that yield stress is reached along diagonal free edge without buckling.

It is noted that the b/t limits suggested here are higher than those of Ref. 13.31 (p. 552), which were based solely on the theoretical studies [13.29]. Reference 13.31 suggests a coefficient of 180 instead of 250 in Eq. 13.5.4 and reaches a maximum of 300 instead of 500 as indicated by Eq. 13.5.4b for $b/a = 2.0$. The reason for the higher values is found in the test results which showed the principal stress along the diagonal free edge to be lower relative to the stress on the loaded edge than had been established by the theoretical study. In other words, the z value, Eq. 13.5.1, as determined by tests is substantially smaller than assumed for the design suggestion of Ref. 13.30.

Plastic Strength of Bracket Plates

Reference 13.31 suggests that to develop the full plastic strength of brackets the b/t ratios should be restricted to about $\frac{1}{3}$ of those limitations for achieving

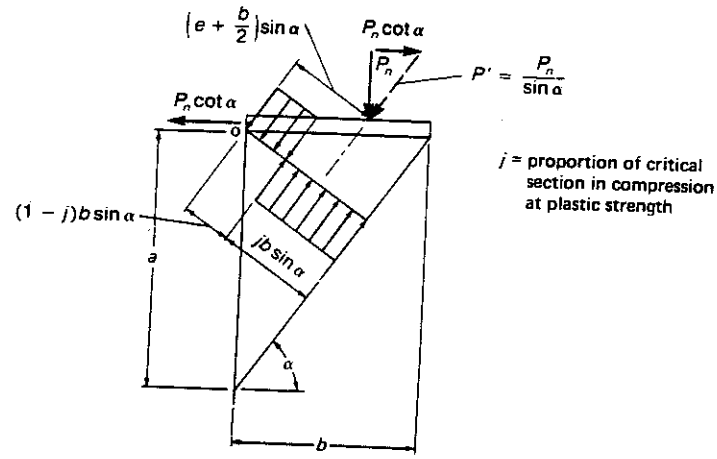

Figure 13.5.4 Plastic strength analysis.

first yield on the free edge. The test results [13.30] indicated that ultimate strengths of at least 1.6 times buckling strengths could be achieved due to post-buckling strength. To be certain of developing the *plastic capacity* of the bracket, it may be realistic to use half of the limitations of Eqs. 13.5.4a and b.

To establish the plastic strength of a bracket plate used in rigid-frame structures, one may follow the approach of Beedle et al. [13.31] as shown in Fig. 13.5.4. This method assumes that plastic strength develops on the critical section. Taking force equilibrium parallel to the free edge and moment equilibrium about point O gives the Beedle et al. [13.31] equation for the ultimate load,

$$P_n = F_y t \sin^2\alpha\left(\sqrt{4e^2 + b^2} - 2e\right) \tag{13.5.5}$$

In addition to the triangular plate being adequate, the top plate must carry the nominal load $P_n \cot\alpha$.

■ EXAMPLE 13.5.1

Determine the thickness required for a triangular bracket plate 25 in. by 20 in. to carry a factored load of 60 kips. Assume the load is located 15 in. from the face of support as shown in Fig. 13.5.5, and that A36 material is used. Use Load and Resistance Factor Design.

SOLUTION

(a) Use the more exact method. Since the load is approximately at the 0.6 point along the loaded edge, the bracket fits the assumption of this method. Using Eq. 13.5.2,

$$P_n = F_y zbt \tag{13.5.2}$$

Since this is a compression situation, the design strength ϕP_n should be equated to P_u. It may be reasonable to use the ϕ for compression; $\phi_c = 0.85$. From Fig. 13.5.2, $b/a = 25/30 = 1.25$, find $z = 0.135$. Then the strength

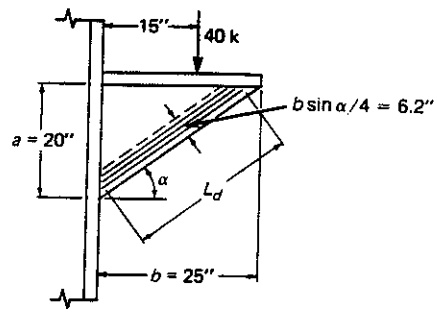

Figure 13.5.5 Bracket for Example 13.5.1.

requirement gives

$$P_u = \phi_c P_n = 0.85 F_y zbt = 60 \text{ kips}$$

$$t \geq \frac{P_u}{\phi F_y zb} = \frac{60}{0.85(36)(0.135)25} = 0.58 \text{ in}$$

The stability requirement, Eq. 13.5.4b, gives

$$t \geq \frac{b\sqrt{F_y}}{250(b/a)} = \frac{25\sqrt{36}}{250(1.25)} = 0.48 \text{ in.}$$

Use $\frac{5}{8}$-in. plate.

(b) Plastic strength method. Using Eq. 13.5.5 for the strength requirement,

$$t \geq \frac{P_u}{\phi F_y \sin^2\alpha\left[\sqrt{4e^2 + b^2} - 2e\right]}$$

Using $e = 15 - 25/2 = 2.5$ in.,

$$t \geq \frac{60}{0.85(36)(0.39)\left[\sqrt{4(2.5)^2 + (25)^2} - 2(2.5)\right]} = 0.25 \text{ in.}$$

For stability, using *one-half* of Eq. 13.5.4b

$$t \geq \frac{b\sqrt{F_y}}{125(b/a)} = \frac{25\sqrt{36}}{125(1.25)} = 0.96 \text{ in.}$$

Use 1-in. plate as a conservative practice to assure deformation well beyond first yield along the free edge.

The authors note that if a 1-in. plate is just stable enough to inhibit buckling until the plastic strength is obtained, that strength would be 4 times (1.0/0.25) the factored load P_u.

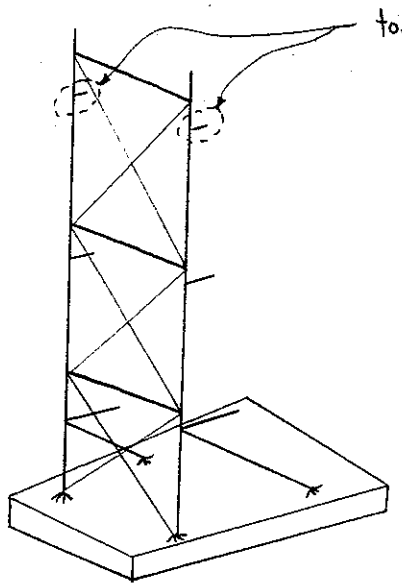

top 2 support arms in question. (W8x24)

For a seven chamber frame configuration without the attached super-structure, an analysis on "Frame Analysis" showed that the combined stress on these two supports was above the allowable stress of 21,600 psi. This indicated that additional strength at these supports was needed.

Due to the time restrictions at CDF for installing chambers, gussets made from C 6x10.5 were quickly fabricated and welded in place. Because of the results in "Frame Analysis" it seemed neccessary to add these gussets. However, after a detailed analysis of these supports, it was found that the addition of gussets was not neccessary after-all. Even though these gussets are not neccessary, it is still a good idea to have additional support and an additional safety margin for these critical members.

The difference between the "Frame Analysis" results and a detailed stress analysis is in how the computer calculates stress due to torsion. (This procedure was covered in detail in previous safety review material). The computer solution yields an exagerated ly high torsional shear stress. A much better method was used to analyze torsional stress. Warping normal, and web & flange shear stresses can be accurately found and then summed together with normal, shear and bending stresses using vector addition. The following calculations were performed using this method. Element # 263 (the worst of the two supports) was analyzed for stress and for proper weld sizing.

(Calculations are based on assuming NO gussets)

Element # 263 (Case 5: 7 chamber Frame)

Length	F_x	F_y	F_z	M_x	M_y	M_z
7.95"	619 lbs	4337 lbs	497 lbs	15,580 in-lb	3824 in-lb	51,200 in-lb

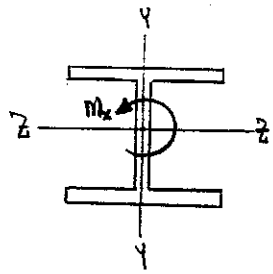

$S_z = 20.9\ in^3$

$S_y = 5.63\ in^3$

$A = 7.08\ in^2$

$$\sigma_x = \frac{F_x}{A} = \frac{619\#}{7.08\ in^2} = 87.\ psi$$

$$\sigma_y = \frac{M_y}{S_y} = \frac{3824\ in\text{-}lb}{5.63\ in^3} = 679\ psi$$

$$\sigma_z = \frac{M_z}{S_z} = \frac{51200\ in\text{-}lb}{20.9\ in^3} = 2450\ psi$$

$$\tau_y = \frac{F_y}{A} = \frac{4337\ lbs}{7.08\ in^2} = 613\ psi$$

$$\tau_z = \frac{F_z}{A} = \frac{497\ lbs}{7.08\ in^2} = 70\ psi$$

$\sigma_{ws} \Rightarrow$ Computer torsional analysis on Math Cad = 5482 psi (warping normal)

$\tau_f \Rightarrow$ " " " " " = 1423 psi (flange shear)

$$\sigma_{comb} = \sqrt{(\sigma_x + \sigma_y + \sigma_z + \sigma_{ws})^2 + (\tau_y + \tau_f)^2 + (\tau_z + \tau_f)^2}$$

$$\sigma_{comb} = \sqrt{(87 + 679 + 2450 + 5482)^2 + (613 + 1423)^2 + (70 + 1423)^2}$$

$\boxed{\sigma_{comb} = 9,057\ psi} < .6 F_y = 21,600\ psi$ OK

Note "Frame Analysis" calculates the shear stress due to torsion (τ_T) for element # 263 as : 29,660 psi (this answer is unrealistic)

Their simplistic formula used is $\tau_T = \frac{M_x\ r_{eff}}{J}$

where r_{eff} = effective radius (.666 for W8X24)

M_x = torsion

J = torsion constant

The more realistic torsional stresses are calculated by using "Torsional Analysis of Steel Members" (From AISC) and getting values:

$\sigma_{ws} = 5482\ psi$ $\tau_f = 1423\ psi$

Reference pp. 247 – 277, Steel Structures, Design & Behavior, Salmon & Johnson

Weld Calculation for connection of W8X24 to TS 10x6x1/2 :

The weld group on a W8X24 has the following simplified line shape:

$$S = bd + \frac{d^2}{3}$$

$$I_p = \frac{b^3 + 3bd^2 + d^3}{6}$$

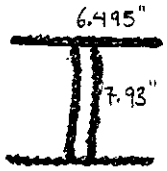

Properties of weld treated as line

$S_z = 72.47 \text{ in}^2$

$S_y = 65.57 \text{ in}^2$

$I_p = 333 \text{ in}^3$

Force / inch of weld calculations:

$$f_x = \frac{F_x}{28.85 \text{ in}} = \frac{619\#}{28.85 \text{ in}} = 21.46 \text{ lb/in}$$

$$f_y = \frac{F_y}{15.86 \text{ in}} = \frac{4337\#}{15.86 \text{ in}} = 273.46 \text{ lb/in}$$

$$f_z = \frac{F_z}{13 \text{ in}} = \frac{528\#}{13 \text{ in}} = 40.62 \text{ lb/in}$$

$$f_{tx} = \frac{M_x \bar{y}}{I_p} = \frac{(15580 \text{ in-lb})(4 \text{ in})}{333 \text{ in}^3} = 187 \text{ lb/in}$$

$$f_{ty} = \frac{M_x \bar{x}}{I_p} = \frac{(15580 \text{ in-lb})(3.25 \text{ in})}{333 \text{ in}^3} = 152.1 \text{ lb/in}$$

$$f_{x'} = \frac{M_y}{S_y} = \frac{3824 \text{ in-lb}}{65.57 \text{ in}^2} = 58.3 \text{ lb/in}$$

$$f_{x''} = \frac{M_z}{S_z} = \frac{51{,}200 \text{ in-lb}}{72.47 \text{ in}^2} = 706.5 \text{ lb/in}$$

$$f_{total} = \sqrt{(f_x + f_{x'} + f_{x''})^2 + (f_y + f_{ty})^2 + (f_z + f_{tz})^2}$$

$$= \sqrt{(21.5 + 58.3 + 706.5)^2 + (273.5 + 152.1)^2 + (40.62 + 187)^2}$$

$$= 922.61 \text{ lb/in} = .923 \text{ kips/in}$$

A 1/16" weld (E70XX) can support .93 kips/in <u>OK</u>

Note: Most of the entire frame uses 1/4" E70XX Filket welds including these support arms.

It has been shown that the gussets add safety, but are NOT necessary.

FERMILAB

RESEARCH DIVISION / MECHANICAL DEPARTMENT - MS#221
WILSON HALL 13TH FLOOR - PHONE: (708) 840-4710 FAX : 840-2950

November 19, 1991

TO: **Safety Review Panel for CMEX UPGRADE**

DVM

FROM: DONALD V. MITCHELL

SUBJECT: **Shear stress in Super-Structure Connection Joint**

This analysis has been performed to answer the safety panel's questions: What is the shear stress on the connection bolts in the flange which connects the upper CMEX frame to the lower CMEX frame? Is it below the allowable stress limit?

To answer these questions, I had to look into several possible situations that may lead to shear stress in the connection bolts.

CASE #1: If the flange plates slide across each other under bending conditions induced by a large moment, a shear stress will develop; but only if the sliding distance is greater than the gap between the bolt and the steel plate. This will be analyzed by calculating deflections of the steel plates.

CASE #2: Same as Case #1, but the gap is assumed to be zero and the analysis is performed using Finite Element Analysis.

CASE #3: ONLY shear stress due to the shear force at the worst flange joint (#248) will be considered. Shear stress due to bending is assumed to be zero (from Case #1).

Summary:

The allowable shear stress on a 3/4" Dia. A325 Bolt is 9300 psi.

The shear stress due to plate bending is zero.

The shear stress due to a maximum shear force is 708 psi.

Based on these calculations, the design is adequate.

Case 1: Shear stress due to Plate bending: (on connection Bolts).

When 2 plates are bolted together and then are subjected to a bending moment, a small shift of one plate across the other plate exists which induces a shear stress to the connection bolts. (see diagram below) The flange plate exposed to the load can be looked at as a cantilevered beam.

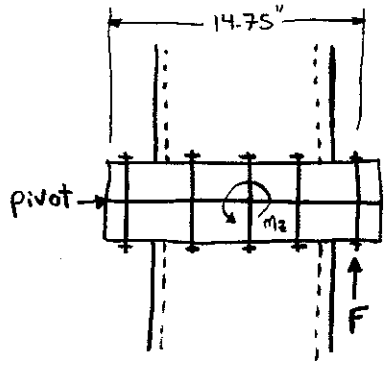

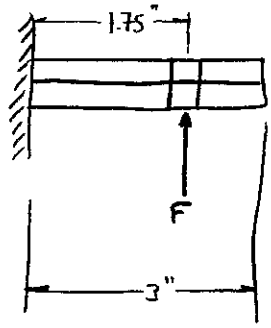

Before Bend

$M_z = 403,704$ in-lb

$F = \frac{m_z}{d} = \frac{403,704 \text{ in-lb}}{14.75"}$

$F = 27,370$ lbs

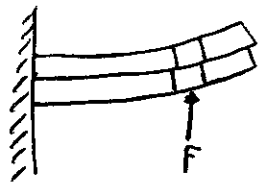

After bend

plates slide across each other

A shear stress will only be induced if the upward deflection is large enough to cause a horizontal slide of the plates large enough to be greater than the gap between the bolt and the plate. (see diagram)

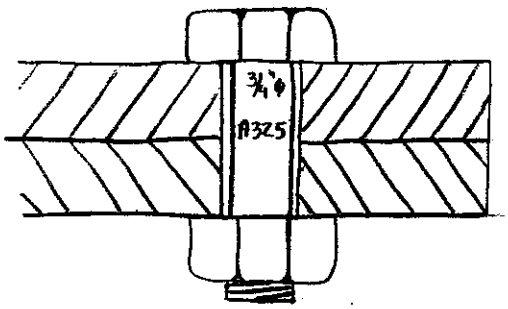

No Shear on Bolt

gap $= \frac{1}{16}$"

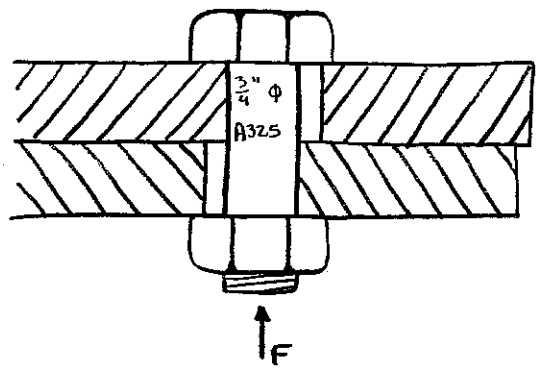

Slide due to bending

Shear on bolt starts in this configuration

gap = ∅"

The upward deflection at the point of load application is:

$$y = \frac{F x^2}{6EI}(x - 3\ell)$$

$$y = \frac{(27,370)(1.75^2)}{6(2.9E7)(.5)}(1.75 - 3(3))$$

$$y = +.00699''$$

The corresponding vertical slide is approximated by:

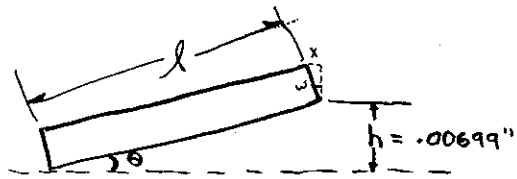

$w = .5''$

$\theta = \tan^{-1} \frac{.00699''}{1.75''}$

$\theta = .22885°$

Vertical slide $= x$

$$\sin\theta = \frac{x}{w}$$

$$x = w \sin\theta$$

$$x = .5 \sin(.22885)$$

$$x = .002''$$

$.002'' << .0625''$

The vertical slide is much, much smaller than the gap between the bolt and the plate. Therefore <u>No</u> shear stress is seen by the connection bolts due to plate bending.

<u>Note:</u> This flange connection is being called out as a friction connection and will have all ten bolts/connection torqued to 250 ft-lbs. This will ensure that there will not be slippage between the plates.

Also, the gussets are designed to stop plate bending. So again it can be shown that there should be no shear force due to bending.

Case 2: Finite analysis of bolted connection:

This analysis assumes that two cantilevered plates (on top of one another) are connected with one 3/4" bolt.

It assumes that there is <u>NO</u> gap between the plates and the bolt. You can think of it as a hot rivet connection.

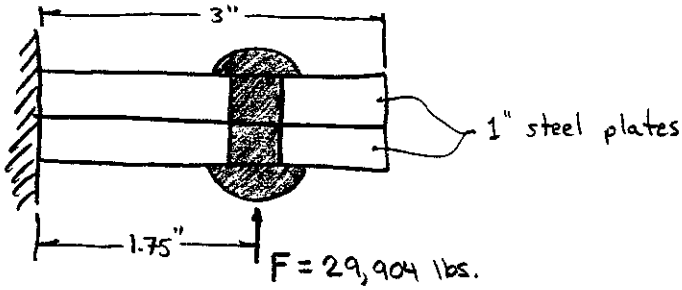

The diagram below illustrates the finite model.

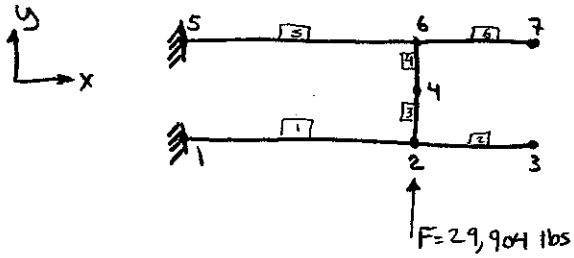

<u>Rectangle 1"x12" elements</u>

#'s 1, 2, 5, 6

Circular 3/4"Ø elements

#'s 3, 4

Node #4 is the actual point at which the plates will try to shear the bolt. So, what is the shear stress at Node #4?

$$\tau_y = 4,456 \text{ psi} \quad \text{from F.E.M.}$$

$$\tau_y < F_a \quad \Rightarrow \quad 4,456 \text{ psi} < 9,300 \text{ psi} \quad \underline{\underline{\text{OK}}}$$

You can see that no space between bolt and plate causes shear stress in the bolt.

The data analysis is attached as Appendix A.

Case 3: Bolt shear stress due to Y-force at joint #248:

$F_y = 2363$ #'s

Force per bolt $= F_y / 10$ bolts

$$\hat{F}_y = \frac{2363\#}{10 \text{ bolts}} = 236.3 \text{ lbs.}$$

Stress Area of bolt $= .334 \text{ in}^2$

$$\tau_y = \frac{\hat{F}_y}{\text{Area}}$$

$$\tau_y = \frac{236.3 \text{ lbs}}{.334} = 707.5 \text{ psi}$$

The allowable stress for a 3/4" Ø, A325 bolt in bearing is

$$F_a = 9{,}300 \text{ psi}$$

$$707.5 \text{ psi} < 9{,}300 \text{ psi} \quad \underline{\underline{OK}}$$

Note: Even if only one bolt took the shear load, the shear stress would still only be 7,075 psi which would still be ok.

Appendix A

F R A M E

STATIC ANALYSIS

STRUCTURAL DYNAMICS RESEARCH CORPORATION

FLANGE PLATE FOR CMEX

*** SPACE FRAME ANALYSIS ***

STRAIGHT BEAMS

BEAM	LENGTH	FORE END JOINT	AFT END JOINT	MATERIAL CODE	SECTION CODE	ROTATION ANGLE	TEMP.
1	1.75	1	2	1	2		
2	1.25	2	3	1	2		
3	0.50	2	4	1	1		
4	0.50	4	6	1	1		
5	1.75	5	6	1	2		
6	1.25	6	7	1	2		

JOINT COORDINATES

JOINT	X	Y	Z
1	0.000	0.000	0.000
2	1.750	0.000	0.000
3	3.000	0.000	0.000
4	1.750	0.500	0.000
5	0.000	1.000	0.000
6	1.750	1.000	0.000
7	3.000	1.000	0.000

MATERIAL PROPERTIES

CODE	E	POISSON'S	DENSITY	THERMAL COEFFICIENT	YIELD
1	30.0E+06	0.290	2.840E-01	2.010E-06	4.600E+04
2	30.0E+06	0.290	2.840E-01	2.010E-06	3.600E+04

CROSS-SECTION PROPERTIES

CODE	AREA	MOMENTS OF INERTIA Z	MOMENTS OF INERTIA Y	SHEAR RATIO Y	SHEAR RATIO Z	TORSION CONSTANT	WARPING CONSTANT	DEG. FIX.
1	4.418E-01	1.553E-02	1.553E-02	1.13	1.13	3.106E-02	BOLT	
2	1.200E+01	1.000E+00	1.440E+02	1.20	1.20	3.790E+00	steel Plate	

STATIC ANALYSIS
FLANGE PLATE FOR CMEX

STRESS RECOVERY VALUES

CODE	COMBINED STRESS	POINT 1/3 C(Y)	C(Z)	R(EFF)	POINT 2/4 C(Y)	C(Z)	R(EFF)
1	0	1.000	1.000	1.000			
2	0	1.000	1.000	1.000			

TOTAL STRUCTURE WEIGHT/MASS = 2.057E+01

C.G. LOCATION: X = 1.502 Y = 0.500 Z = 0.000

SPECIFIED RESTRAINTS

JOINT	DIRECTION	VALUE
1	123456	
5	123456	

LOADING NO. 1: BEAM LOADING T8X6X3/16

JOINT	APPLIED FORCES DIR	TYPE	VALUE	FINAL JOINT	INC.
2	Y	FORCE	2.990E+04		

TOTAL APPLIED FORCES:
F(X) = 0.000E+00 F(Y) = 2.990E+04 F(Z) = 0.000E+00

MOMENTS ABOUT ORIGIN:
M(X) = 0.000E+00 M(Y) = 0.000E+00 M(Z) = 5.233E+04

```
DEGREES OF FREEDOM =          30
MAXIMUM BANDWIDTH =           18
AVERAGE BANDWIDTH =           10
PROFILE SIZE =               285

NUMBER OF JOINTS =             7
NUMBER OF ELEMENTS =           6
MAXIMUM JOINT NUMBER =         7
MAXIMUM ELEMENT NUMBER =       6
DIAGONAL ELEMENTS: AVERAGE = 5.745E+08 SMALLEST = 1.444E+06 ROW      17
```

F R A M E

STATIC ANALYSIS

STRUCTURAL DYNAMICS RESEARCH CORPORATION

FLANGE PLATE FOR CMEX

UNITS USED FOR RESULTS:

UNITS FOR DISPLACEMENT ARE: IN

UNITS FOR FORCE ARE: LB

UNITS FOR STRESS ARE: PSI

UNITS FOR STRAIN ENERGY ARE: LB -IN

*** LOADING NO. 1: BEAM LOADING T8X6X3/16

JOINT DISPLACEMENTS

JOINT	X	Y	Z	THETA(X)	THETA(Y)	THETA(Z)
1	0.000E+00	0.000E+00	0.000E+00	0.000E+00	0.000E+00	0.000E+00
2	8.485E-06	1.442E-03	0.000E+00	0.000E+00	0.000E+00	9.608E-04
3	8.485E-06	2.643E-03	0.000E+00	0.000E+00	0.000E+00	9.608E-04
4	-6.207E-05	1.071E-03	0.000E+00	0.000E+00	0.000E+00	2.442E-04
5	0.000E+00	0.000E+00	0.000E+00	0.000E+00	0.000E+00	0.000E+00
6	-8.485E-06	7.004E-04	0.000E+00	0.000E+00	0.000E+00	4.642E-04
7	-8.485E-06	1.281E-03	0.000E+00	0.000E+00	0.000E+00	4.642E-04

MAXIMUM DISPLACEMENTS

JOINT	4	3	1	1	1	2
VALUE	-6.207E-05	2.643E-03	0.000E+00	0.000E+00	0.000E+00	9.608E-04

JOINT REACTIONS

JOINT	F(X)	F(Y)	F(Z)	M(X)	M(Y)	M(Z)
1	-1.745E+03	-2.008E+04	0.000E+00	0.000E+00	0.000E+00	-3.403E+04
5	1.745E+03	-9.825E+03	0.000E+00	0.000E+00	0.000E+00	-1.655E+04
TOTAL	8.527E-14	-2.990E+04	0.000E+00	0.000E+00	0.000E+00	-5.059E+04

STATIC ANALYSIS
FLANGE PLATE FOR CMEX
LOADING 1 - BEAM LOADING T8X6X3/16

SUMMATION OF FORCES AT JOINTS

JOINT: 1

BEAM	F(X)	F(Y)	F(Z)	M(X)	M(Y)	M(Z)
1	-1.745E+03	-2.008E+04	0.000E+00	0.000E+00	0.000E+00	-3.403E+04

JOINT: 2

BEAM	F(X)	F(Y)	F(Z)	M(X)	M(Y)	M(Z)
1	1.745E+03	2.008E+04	0.000E+00	0.000E+00	0.000E+00	-1.104E+03
2	0.000E+00	-3.638E-12	0.000E+00	0.000E+00	0.000E+00	-2.313E-12
3	-1.745E+03	9.825E+03	0.000E+00	0.000E+00	0.000E+00	1.104E+03
	---	---	---	---	---	---
	0.000E+00	2.990E+04	0.000E+00	0.000E+00	0.000E+00	0.000E+00

JOINT: 3

BEAM	F(X)	F(Y)	F(Z)	M(X)	M(Y)	M(Z)
2	0.000E+00	3.638E-12	0.000E+00	0.000E+00	0.000E+00	-9.095E-13

JOINT: 4

BEAM	F(X)	F(Y)	F(Z)	M(X)	M(Y)	M(Z)
3	1.745E+03	-9.825E+03	0.000E+00	0.000E+00	0.000E+00	-2.313E+02
4	-1.745E+03	9.825E+03	0.000E+00	0.000E+00	0.000E+00	2.313E+02
	---	---	---	---	---	---
	0.000E+00	0.000E+00	0.000E+00	0.000E+00	0.000E+00	0.000E+00

JOINT: 5

BEAM	F(X)	F(Y)	F(Z)	M(X)	M(Y)	M(Z)
5	1.745E+03	-9.825E+03	0.000E+00	0.000E+00	0.000E+00	-1.655E+04

JOINT: 6

BEAM	F(X)	F(Y)	F(Z)	M(X)	M(Y)	M(Z)
4	1.745E+03	-9.825E+03	0.000E+00	0.000E+00	0.000E+00	6.412E+02
5	-1.745E+03	9.825E+03	0.000E+00	0.000E+00	0.000E+00	-6.412E+02
6	5.684E-14	4.547E-13	0.000E+00	0.000E+00	0.000E+00	1.403E-13
	---	---	---	---	---	---
	5.684E-14	4.547E-13	0.000E+00	0.000E+00	0.000E+00	1.403E-13

STATIC ANALYSIS
FLANGE PLATE FOR CMEX
LOADING 1 - BEAM LOADING T8X6X3/16

JOINT: 7

BEAM	F(X)	F(Y)	F(Z)	M(X)	M(Y)	M(Z)
6	-5.684E-14	-4.547E-13	0.000E+00	0.000E+00	0.000E+00	-4.547E-13

FORCES AND MOMENTS IN BEAMS

BEAM	JT.	FORCES X	FORCES Y	FORCES Z	MOMENTS X	MOMENTS Y	MOMENTS Z
1	1	1.745E+03	2.008E+04	0.000E+00	0.000E+00	0.000E+00	3.403E+0
	2	1.745E+03	2.008E+04	0.000E+00	0.000E+00	0.000E+00	-1.104E+0
2	2	0.000E+00	3.638E-12	0.000E+00	0.000E+00	0.000E+00	2.313E-1
	3	0.000E+00	3.638E-12	0.000E+00	0.000E+00	0.000E+00	-9.095E-1
3	2	-9.825E+03	-1.745E+03	0.000E+00	0.000E+00	0.000E+00	-1.104E+0
	4	-9.825E+03	-1.745E+03	0.000E+00	0.000E+00	0.000E+00	-2.313E+0
4	4	-9.825E+03	-1.745E+03	0.000E+00	0.000E+00	0.000E+00	-2.313E+0
	6	-9.825E+03	-1.745E+03	0.000E+00	0.000E+00	0.000E+00	6.412E+0
5	5	-1.745E+03	9.825E+03	0.000E+00	0.000E+00	0.000E+00	1.655E+0
	6	-1.745E+03	9.825E+03	0.000E+00	0.000E+00	0.000E+00	-6.412E+0
6	6	-5.684E-14	-4.547E-13	0.000E+00	0.000E+00	0.000E+00	-1.403E-1
	7	-5.684E-14	-4.547E-13	0.000E+00	0.000E+00	0.000E+00	-4.547E-1

STATIC ANALYSIS
FLANGE PLATE FOR CMEX
LOADING 1 - BEAM LOADING T8X6X3/16

STRESS CALCULATIONS

BEAM	END	PT.	T SHEAR P/A	Y SHEAR Y BENDING	Z SHEAR Z BENDING	COMBINED	STRESS RATIO
1	FORE	1	0.000E+00	2.008E+03	0.000E+00		
			1.454E+02	0.000E+00	-3.403E+04	3.418E+04	0.74
2	FORE	1	0.000E+00	3.638E-13	0.000E+00		
			0.000E+00	0.000E+00	-2.313E-12	2.313E-12	0.00
3	FORE	1	0.000E+00	-4.456E+03	0.000E+00		
			-2.224E+04	0.000E+00	7.107E+04	9.331E+04	2.03
4	AFT	1	0.000E+00	-4.456E+03	0.000E+00		
			-2.224E+04	0.000E+00	-4.129E+04	6.353E+04	1.38
5	FORE	1	0.000E+00	9.825E+02	0.000E+00		
			-1.454E+02	0.000E+00	-1.655E+04	1.670E+04	0.36
6	AFT	1	0.000E+00	-4.547E-14	0.000E+00		
			-4.737E-15	0.000E+00	4.547E-13	4.595E-13	0.00

MAXIMUM STRESS = 9.331E+04 ON BEAM 3

STATIC ANALYSIS
FLANGE PLATE FOR CMEX
LOADING 1 - BEAM LOADING T8X6X3/16

T A B L E O F C O N T E N T S

	PAGE
LOAD CASE NO. 1: BEAM LOADING T8X6X3/16	
DISPLACEMENTS	1
REACTION FORCES	1
MEMBER FORCES	3
BEAM STRESSES	4

Properties

#1

```
K : !!L
K :
CL: Current
CL: Bin No. - name                  : 1 - MAIN
CL: Section type                    : Circular  Bolt
CL: Dimensions
CL:  OD                             :  0.75
CL:  ID                             :  0.0
CL: Properties
CL:  Area                           :  0.4417875
CL:  Prin. moment of inertia Y      :  0.015531434
CL:  Prin. moment of inertia Z      :  0.015531434
CL:  Shear ratio Y                  :  1.1282052
CL:  Shear ratio Z                  :  1.1282052
CL:  Torsional constant             :  0.03106287
CL:  Warping constant               :  0.0
CL:  Warping restraint factor       :  0.0
CL:  Eccentricity Y                 :  0.0
CL:  Eccentricity Z                 :  0.0
CL:  Plastic modulus Y              :  0.07032657
CL:  Plastic modulus Z              :  0.07032657
CL:  Plastic modulus torsion        :  0.11044687
CL:  Offset rotation angle          :  0.0
CL:  Rt                             :  0.0
CL:  Stress recovery values:
CL:      Stress
CL:   Pt. Code  Cy    Cz    Reff
CL:    1    1    0.375   0.375   0.375
CL:
K : MF
K : PR
K : T
K : L
K : OF
K : !E
E : **** END OF SESSION ****
```

Properties

#2

```
K : !!L
K :
CL: Current
CL: Bin No. - name                  : 1 - MAIN
CL: Section type                    : Rectangle  Plate   1"x12"
CL: Dimensions
CL:  Base                           :  12.0
CL:  Height                         :  1.0
CL: Properties
CL:  Area                           :  12.0
CL:  Prin. moment of inertia Y      :  144.0
CL:  Prin. moment of inertia Z      :  1.0
CL:  Shear ratio Y                  :  1.2
CL:  Shear ratio Z                  :  1.2
CL:  Torsional constant             :  3.7899760
CL:  Warping constant               :  0.0
CL:  Warping restraint factor       :  0.0
CL:  Eccentricity Y                 :  0.0
CL:  Eccentricity Z                 :  0.0
CL:  Plastic modulus Y              :  36.0
CL:  Plastic modulus Z              :  3.0
CL:  Plastic modulus torsion        :  26.0
CL:  Offset rotation angle          :  0.0
CL:  Rt                             :  0.0
CL:  Stress recovery values:
CL:      Stress
CL:   Pt. Code  Cy    Cz    Reff
CL:    1    4    0.5   6.0   0.0
CL:    2    2    0.5   0.0   0.99486870
CL:
K : MF
K : PR
K : E
E : **** END OF SESSION ****
```