Fermilab

Particle Physics Division

Mechanical Department Engineering Note

Number: MD-ENG-522 Date: July 16, 2014

Project: MicroBooNE

Project Internal Reference:

Title: Evaluation of a hole in an Intermediate Deck beam for a laser pipe

Author(s): Jim Kilmer

Reviewer(s): Robert J Woods

Key Words:

Abstract/Summary:

This note provides calculations for a proposed hole in one of the support beams for the intermediate deck. The hole is 6 inches in diameter and on the neutral axis of a W12 by 40 support beam.

Applicable Codes:

AISC Manual of Steel Construction, Ninth edition

Engineering Note for Hole in Intermediate Deck Beam
Jim Kilmer
July 15, 2014

MicroBooNE will use a pair of laser beams to provide calibration and timing for the detector system. It has become necessary to look at an alternate path to get the laser pipe from where the laser sits to the entry port on the vessel. The preferred path is through the center of one of the support beams for the Intermediate Deck. The desired hole is 4-6 inches in diameter centered on the beam neutral axis. See the picture below.

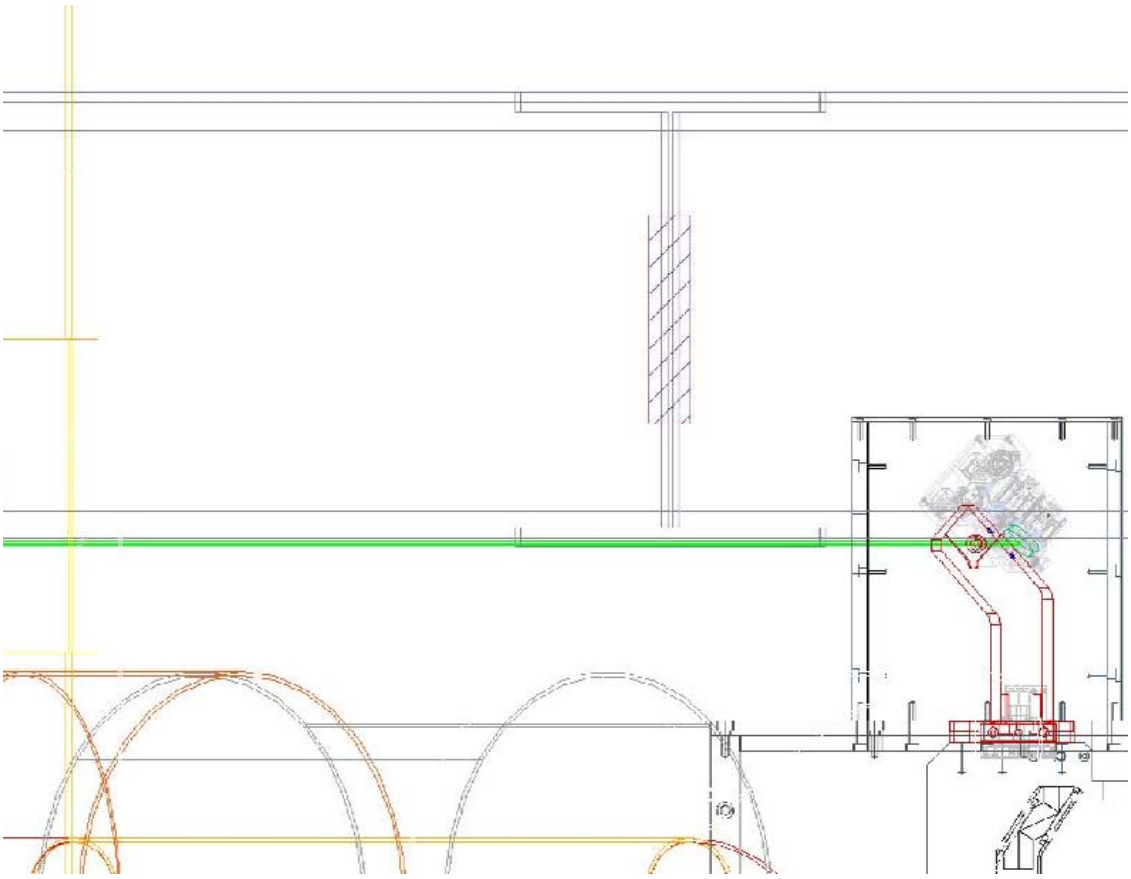

The cross-hatched area is where the hole is proposed. The I-beam is a W12 by 40 beam. The plan view is shown on the next page. The green tube is the laser pipe and the orange frame is the support frame for the relief valve shown inside the trapezoid. There are two loads superimposed on this beam. The first is a maximum load of 200 psf on the deck from the building drawings. The load is modelled by using Case 1 page 2-296 of the AISC Manual of Steel Construction. The second load is modelled as a uniform load partially distributed (Case 4,page 2-297) for the relief valve support. In a session to try and fit up the laser system a pair of taped markers were added to the I-beam to indicate where the holeneeds to be. The dimension varied from 77" to 87" from the top of the beam as shown in this picture. Both numbers will be used to bracket the stresses in the beam for a hole inside that space.

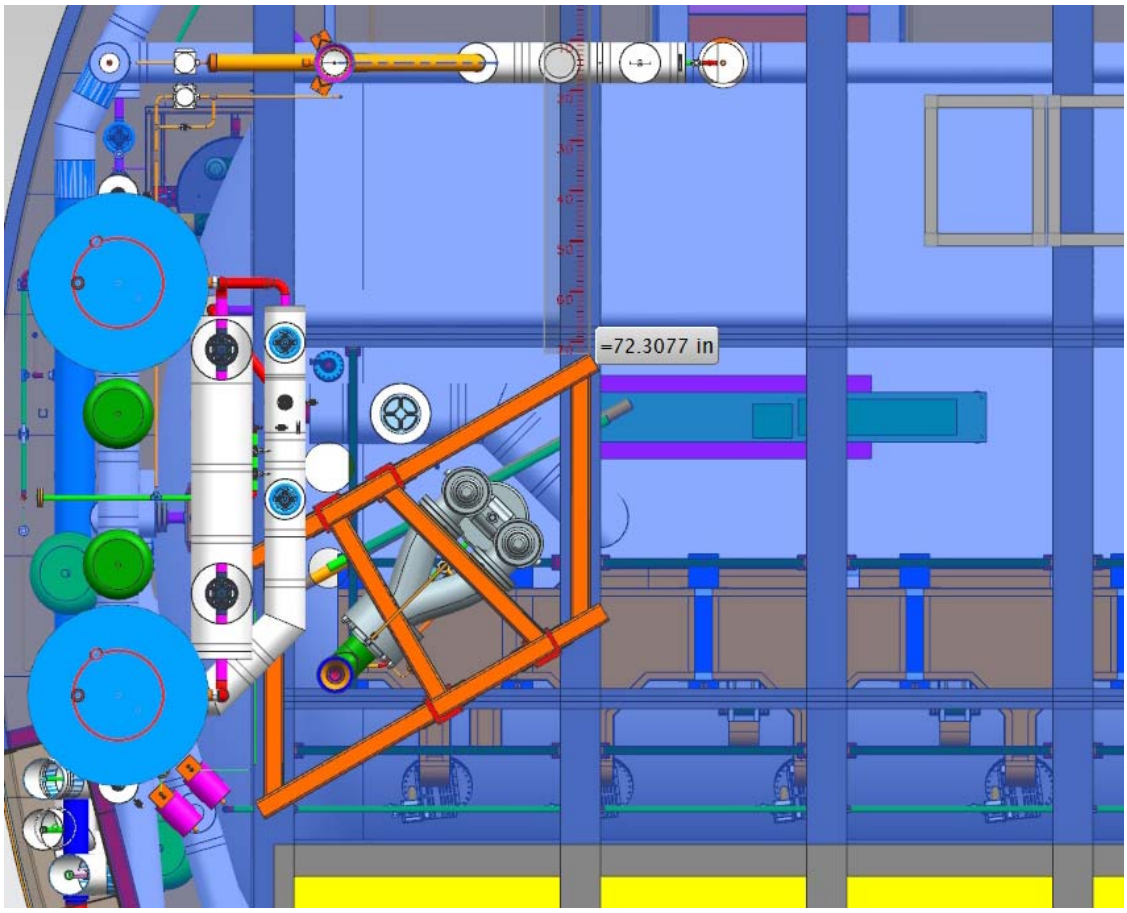

BEAM LOADS

First calculate the loads on the beam for each loading case. Assume that the beam has to support 1/2 of the load on the deck on each side of the beam. The maximum deck loading in the building construction drawing S-1 is given as 200 psf. Assume the deck itself weighs another 5 psf. Additionally, the beam itself weighs 3.33 lb/inch.

$$\text{beamspace} := 5.083 \cdot \text{ft} + 4.083 \cdot \text{ft} = 9.166 \cdot \text{ft}$$ Deck disance on both sides of beam

$$w_1 := \frac{\text{beamspace}}{2} \cdot 205 \frac{\text{lb}}{\text{ft}^2} + 3.33 \cdot \frac{\text{lb}}{\text{in}} = 81.623 \cdot \frac{\text{lb}}{\text{in}}$$ Uniform load on beam for case 1

The load for case 2 is one half of a 3000 lb load distributed along a 48 inch length in a certain section of the beam.

$$w_2 := \frac{1500 \cdot \text{lb}}{48 \cdot \text{in}} = 31.25 \cdot \frac{\text{lb}}{\text{in}}$$ Uniform load from the relief valve support

The procedure used here will be to calculate moments from each case and sum them for superposition. This will be done for both x equals 77" and 87" to pick the largest maximum stress of the beam.

CALCULATE BENDING STRESS FOR X=77" POSITION ON BEAM WITH HOLE

$l := 218 \cdot in$ Length of beam

$x := 77 \cdot in$ first possible position of hole

Case 1

$M_{x1} := \frac{w_1 \cdot x}{2} \cdot (l - x)$ Moment at any position x for a uniform load

$M_{x1} = 4.431 \times 10^5 \cdot lb \cdot in$

Case 2

$a := 72 \cdot in$ $b := 48 \cdot in$ $c := 98 \cdot in$

$R_1 := \frac{w_2 \cdot b}{2 \cdot l} \cdot (2 \cdot c + b)$

$R_1 = 839.45 \cdot lb$ Reaction load on support

$M_{x2} := R_1 \cdot x - \frac{w_2}{2} \cdot (x - a)^2$ Moment at a position for a uniform load partially distributed

$M_{x2} = 6.425 \times 10^4 \cdot lb \cdot in$

$M_T := M_{x1} + M_{x2} = 5.073 \times 10^5 \cdot lb \cdot in$ Total moment at x equals 77"

Now calculate the Moment of Inertia for the I-beam with a 6" hole located on the neutral axis of the beam. From the AISC code for a W12 by 40 beam:

$I_{xx} := 310 \cdot in^4$ $cee := \frac{11.94 \cdot in}{2} = 5.97 \cdot in$

$I_{xxhole} := I_{xx} - \frac{1}{12} \cdot 0.295 \cdot in \cdot (6 \cdot in)^3 = 304.69 \cdot in^4$

$f_b := \frac{M_T \cdot cee}{I_{xxhole}} = 9.941 \times 10^3 \cdot \frac{lb}{in^2}$ Maximum bending stress for beam with a 6" hole

CALCULATE BENDING STRESS FOR X=87" POSITION ON BEAM WITH HOLE

$l := 218 \cdot in$ Length of beam

$x := 87 \cdot in$ second possible position of hole

Case 1

$M_{x1} := \frac{w_1 \cdot x}{2} \cdot (l - x)$ Moment at any position x for a uniform load

$M_{x1} = 4.651 \times 10^5 \cdot lb \cdot in$

Case 2

$a := 72 \cdot in$ $b := 48 \cdot in$ $c := 98 \cdot in$

$R_1 := \frac{w_2 \cdot b}{2 \cdot l} \cdot (2 \cdot c + b)$

$R_1 = 839.45 \cdot lb$ Reaction load on support

$M_{x2} := R_1 \cdot x - \frac{w_2}{2} \cdot (x - a)^2$ Moment at a position for a uniform load partially distributed

$M_{x2} = 6.952 \times 10^4 \cdot lb \cdot in$

$M_T := M_{x1} + M_{x2} = 5.346 \times 10^5 \cdot lb \cdot in$ Total moment at x equals 87"

Now calculate the Moment of Inertia for the I-beam with a 6" hole located on the neutral axis of the beam. From the AISC code for a W12 by 40 beam:

$I_{xx} := 310 \cdot in^4$ $cee := \frac{11.94 \cdot in}{2} = 5.97 \cdot in$

$I_{xxhole} := I_{xx} - \frac{1}{12} \cdot 0.295 \cdot in \cdot (6 \cdot in)^3 = 304.69 \cdot in^4$

$f_b := \frac{M_T \cdot cee}{I_{xxhole}} = 1.048 \times 10^4 \cdot \frac{lb}{in^2}$ Maximum bending stress for beam with a 6" hole

Both cases have stresses less than Fb for A-36 beams of 23.7 Ksi so a hole can be put into the beam without needing a reinforcement plate at any position between 77 and 87 inches from the end of the beam.

DESCRIPTION: MICROBOONE BEAM LOAD
CATEGORY: BEAM PROJECT:

REV	REVISION CONTROL DOCUMENT	DATES	SIGNATURES	
-	F10026018---RCD		DRAWN	
			APPROVED	

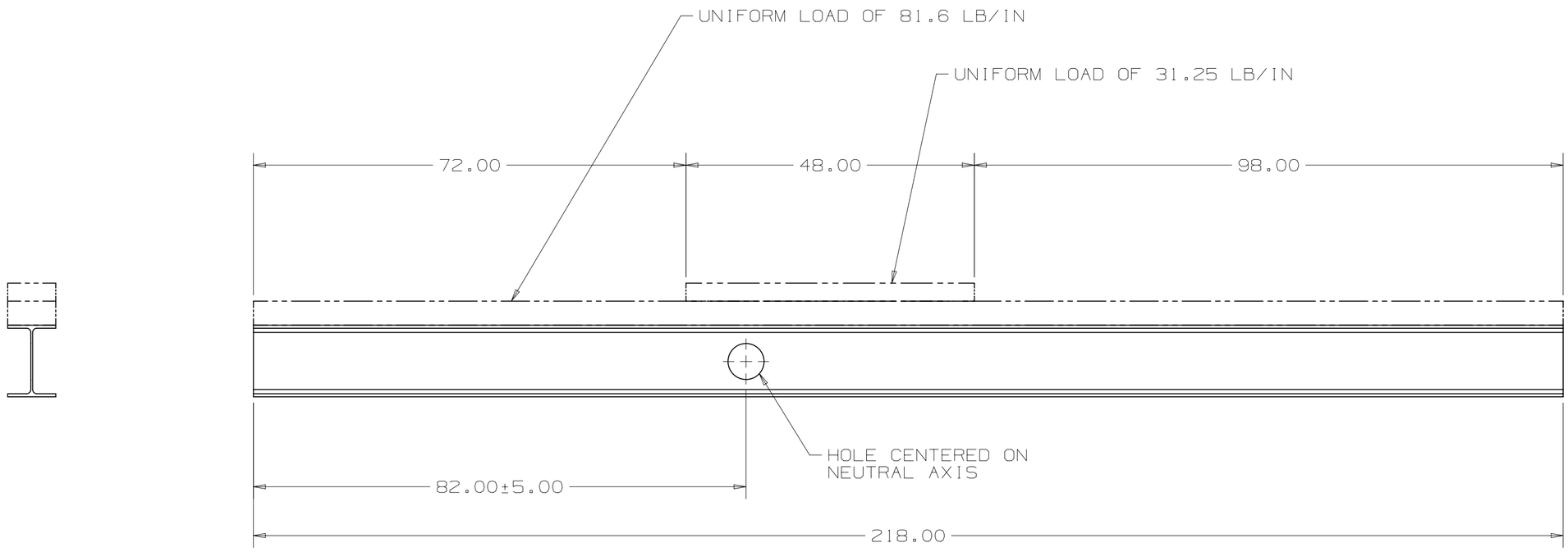

UNLESS OTHERWISE SPECIFIED				
±.X	±.XX	±.XXX	±X/X	±X°
.1	.02	.005	1/16	1°

BREAK ALL SHARP EDGES .015 MAX.
DO NOT SCALE DRAWING
DIMENSIONS BASED ON ASME Y14.5M-1994
MAX. ALL MACH SURFACES 125
DRAWING UNITS: INCHES

DRAWN	T.SPERRY	DATE	17-Jul-2014
CHECKED		DATE	
APPROVED		DATE	

USED ON

MATERIAL

GROUP: Particle Physics Mechanical Support | CAGE CODE: 0U5R6

FERMI NATIONAL ACCELERATOR LABORATORY
UNITED STATES DEPARTMENT OF ENERGY

NAME
MICROBOONE BEAM LOAD

SCALE	SIZE	DRAWING NUMBER	SHEET	REV
1:16	C	F10026018	1 OF 1	-