REV	DESCRIPTION	DWI	APVD	DATE

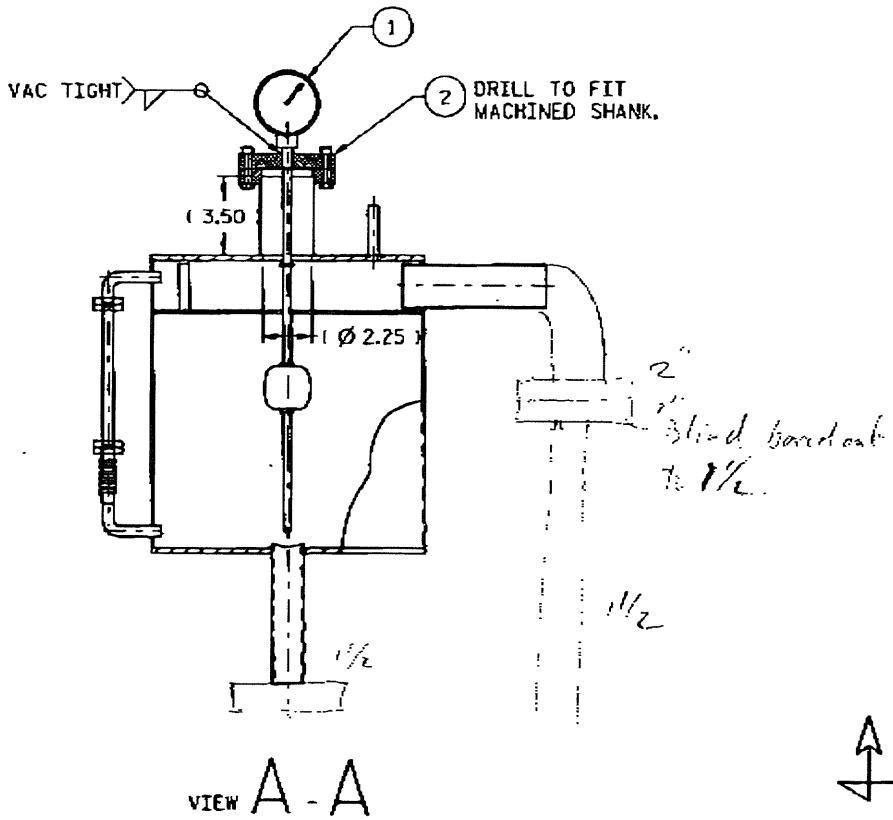

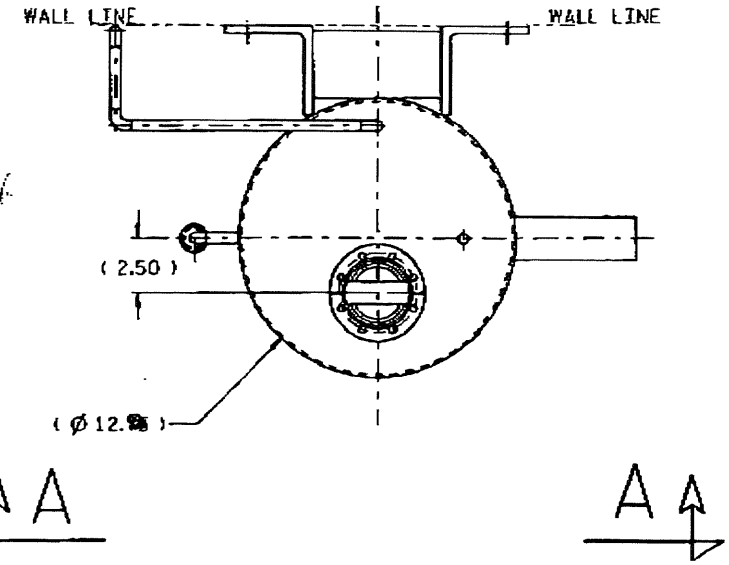

ITEM NO	PREF	BASE	SUFF	TITLE OR DESCRIPTION	QTY
2	MDC F450000			VAC FLANGE Ø 4.5 BLANK	1
1				FLUID LEVEL METER	1

STOCK OR PART NO

SA-350-425-21
NEXT ASSEMBLIES:

DIMENSIONING AND TOLERANCING IS IN ACCORDANCE WITH ASME Y14.5M-1994.

UNLESS OTHERWISE SPECIFIED: DIMENSIONS ARE IN INCHES. TOLERANCES: BREAK EDGES .005-.015 INTERNAL CORNERS R.015 MAX FRACTIONS ± --- DEC .XX ± .06 .XXX ± --- .XXXX ± --- ALL SURF

SCALE: 1 : 4

DO NOT SCALE DRAWING

CAD FILE NAME: sa35042522.e0

STANFORD LINEAR ACCELERATOR CENTER
U.S. DEPARTMENT OF ENERGY
STANFORD UNIVERSITY STANFORD, CALIFORNIA

PROPRIETARY DATA OF STANFORD UNIVERSITY AND/OR U. S. DEPARTMENT OF ENERGY. RECIPIENT SHALL NOT PUBLISH THE INFORMATION WITHIN UNLESS GRANTED SPECIFIC PERMISSION OF STANFORD UNIVERSITY.

		DATE
ENGR	D. WALZ	
DWN	B.BRUGNOLETTI	6-19-98
CHKR	G. KRAFT	

APPROVALS: D. WALZ

BABAR CALORIMETER NEUTRON BUNKER METERED LEVEL ASSY

SA-350-425-22 E0 C

SH 1 OF 1

BABAR CAL NEUT BUNK LEVEL ASSY

SA-350-425-22 E0 C

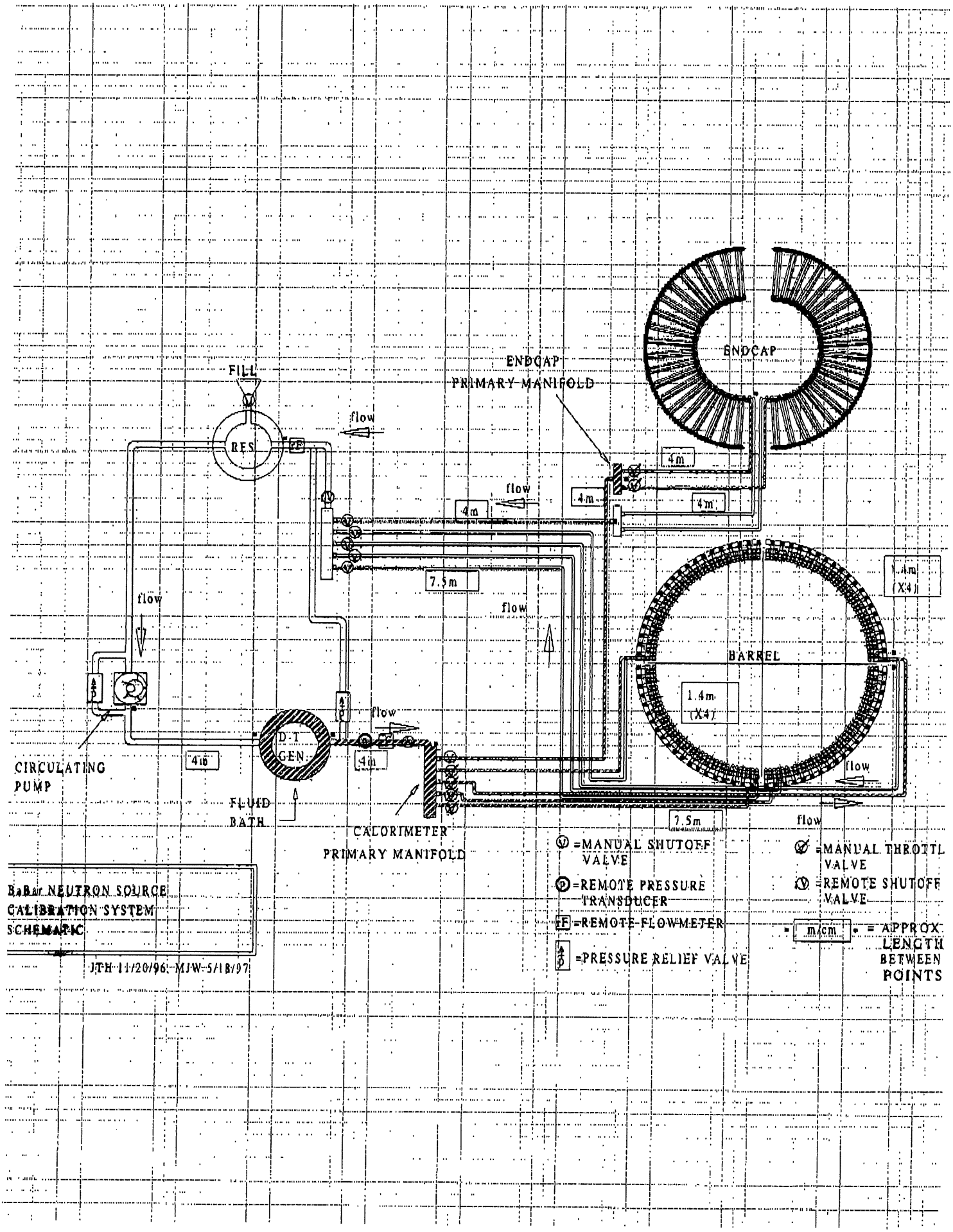
FILL
RES
FF
flow
ENDCAP
PRIMARY MANIFOLD
ENDCAP
4m
4m
4m
4m
7.5m
flow
flow
1.4m
(X4)
BARREL
1.4m
(X4)
flow
D.T.
GEN.
4m
4m
CIRCULATING
PUMP
FLUID
BATH
CALORIMETER
PRIMARY MANIFOLD
7.5m
flow
flow
=MANUAL SHUTOFF VALVE
=MANUAL THROTTL VALVE
=REMOTE PRESSURE TRANSDUCER
=REMOTE SHUTOFF VALVE
=REMOTE FLOWMETER
m/cm
= APPROX. LENGTH BETWEEN POINTS
=PRESSURE RELIEF VALVE
BaBar NEUTRON SOURCE
CALIBRATION SYSTEM
SCHEMATIC
JTH 11/20/96, MJW 5/18/97

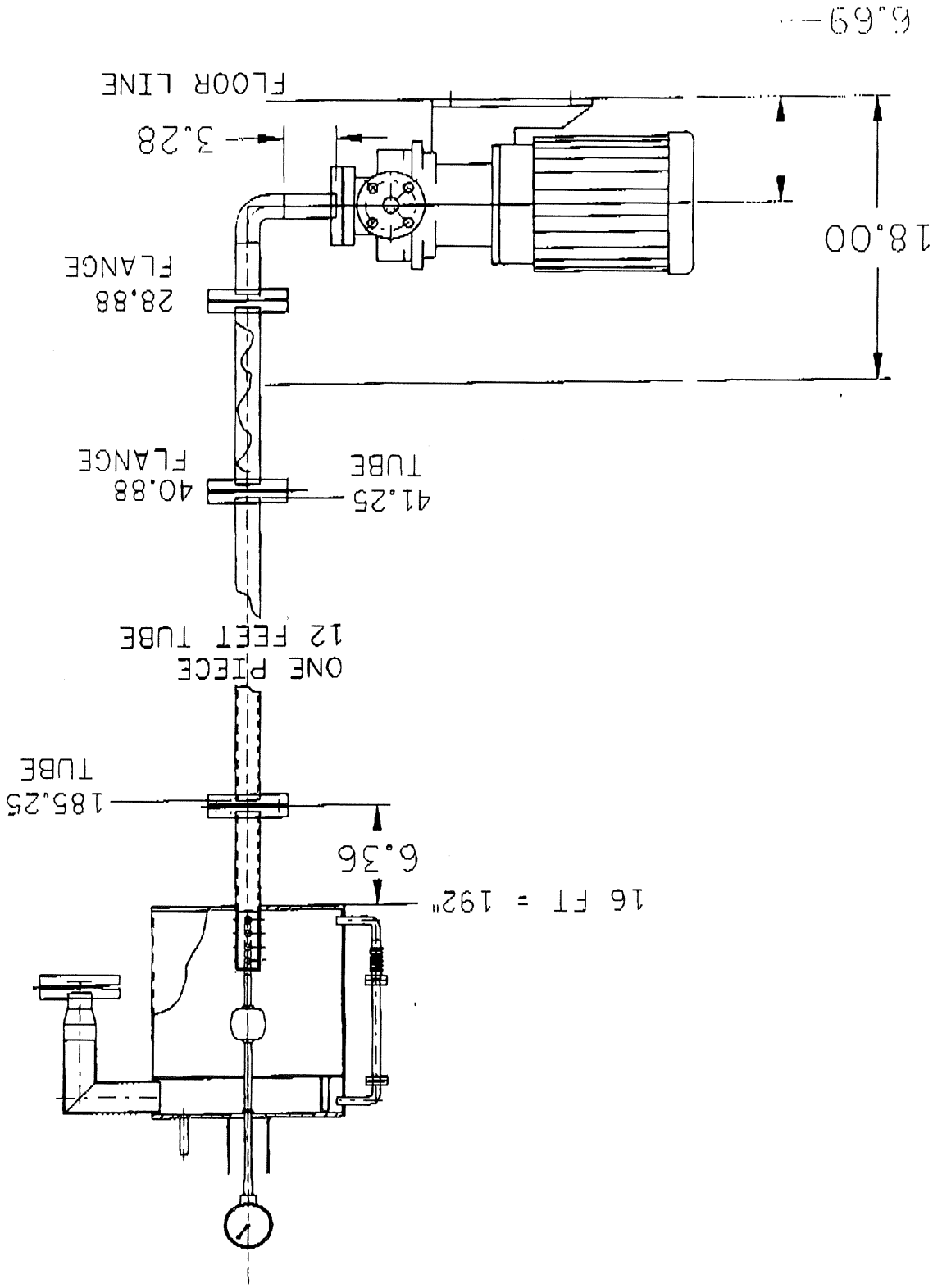
16 FT = 192"
6.36
185.25
TUBE
ONE PIECE
12 FEET TUBE
41.25
TUBE
40.88
FLANGE
28.88
FLANGE
18.00
3.28
FLOOR LINE
6.69

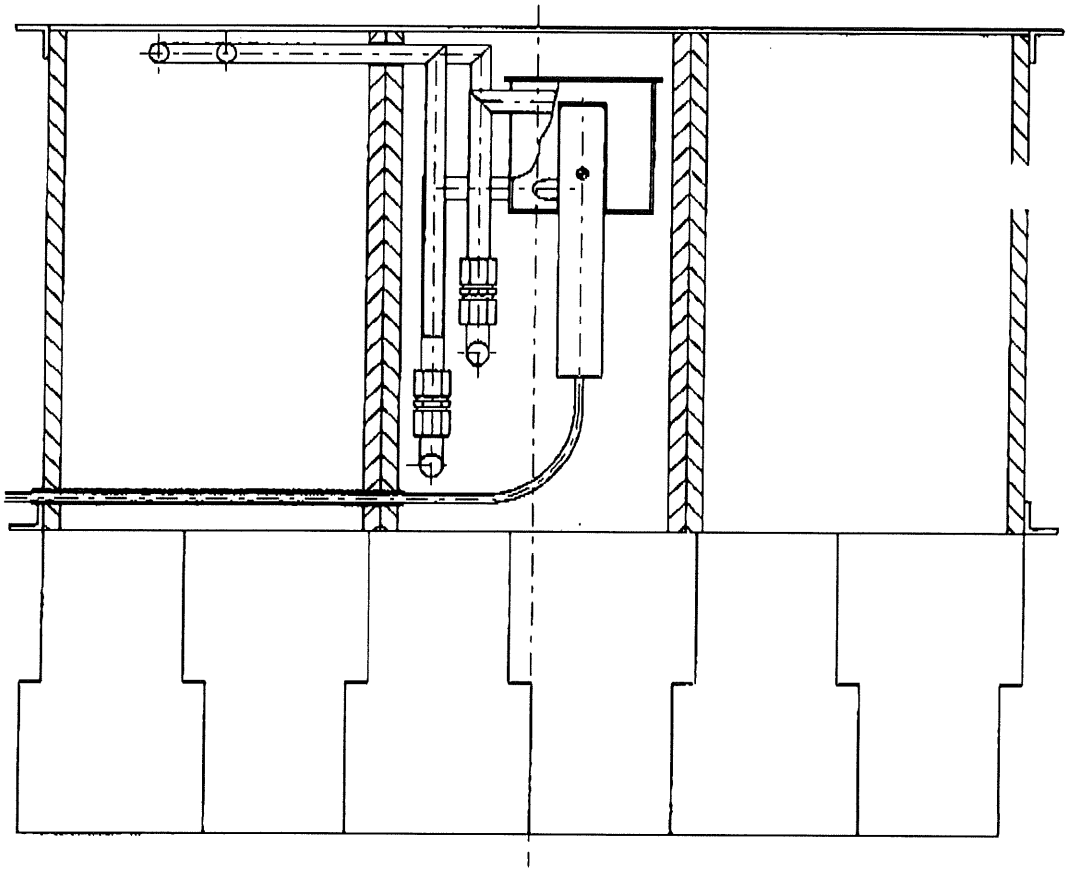

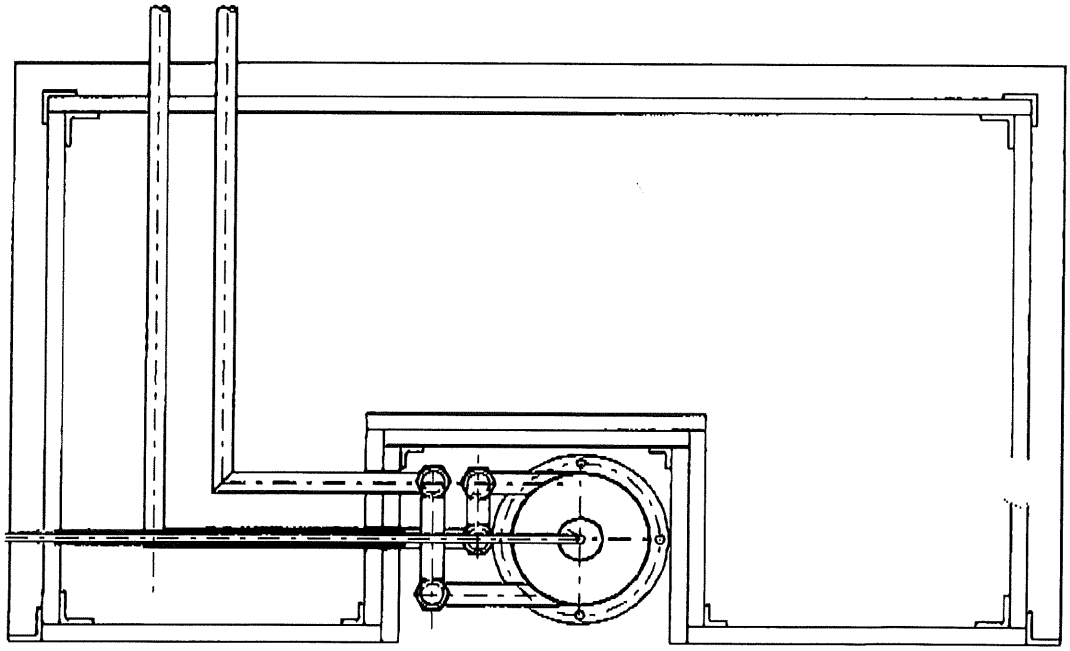

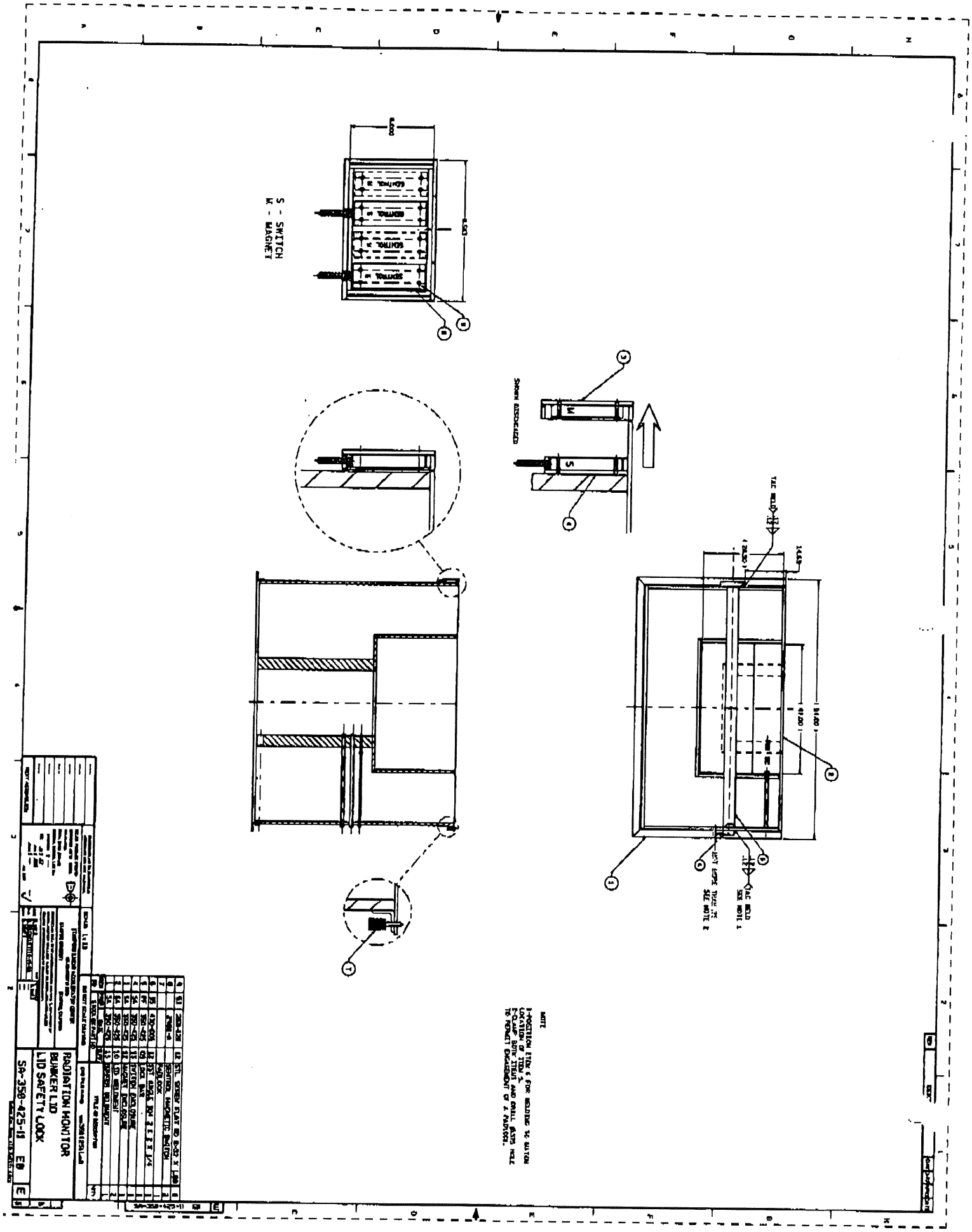
S - SWITCH
M - MAGNET
RADIATION MONITOR
BUNKER LID
LID SAFETY LOCK
SA-350-425-11 EB

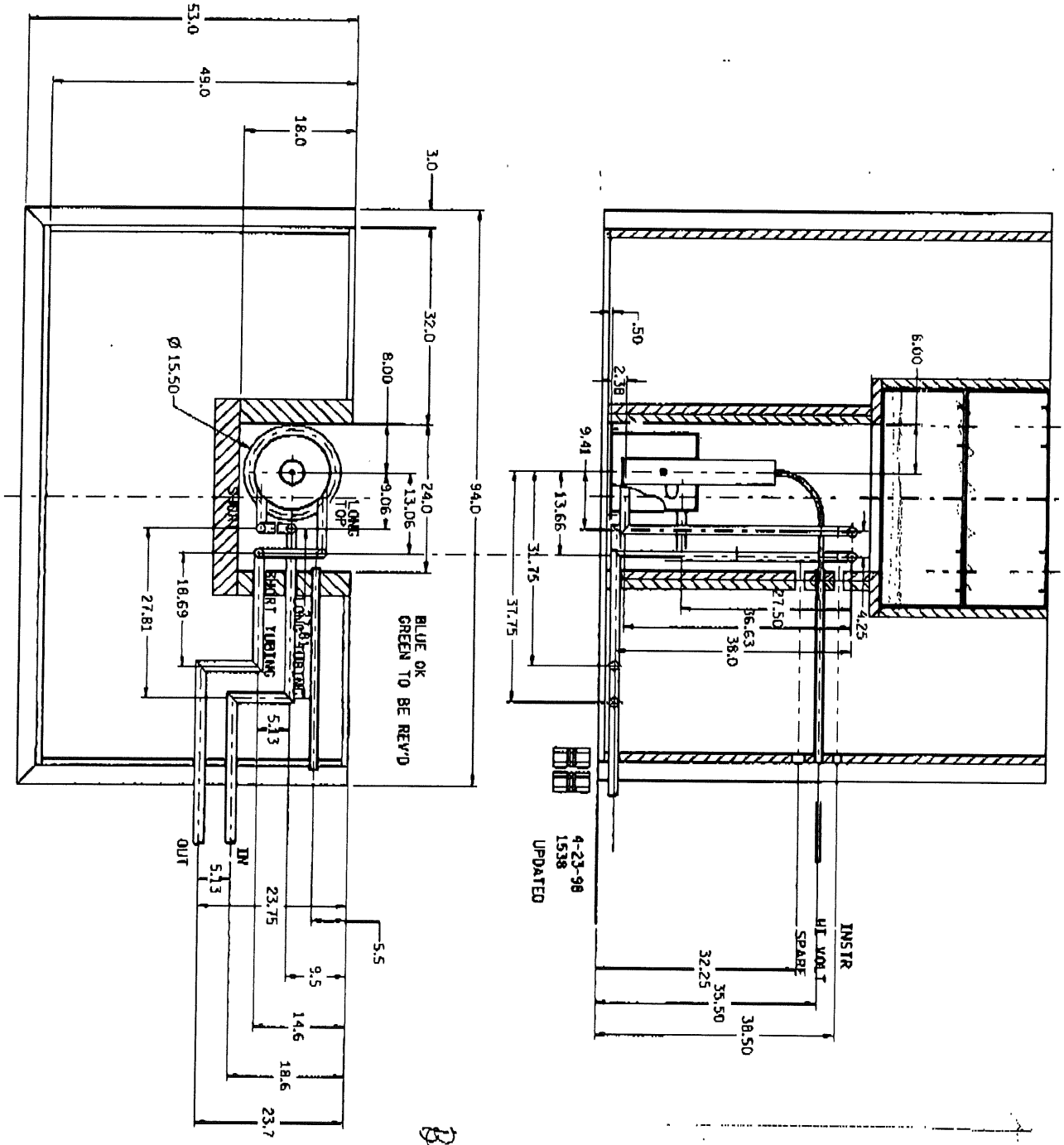

BUNKER 2, LAE

Tu 4-28
1156

REV	DESCRIPTION	DRN	CHK	APP	DATE
0	03	---			

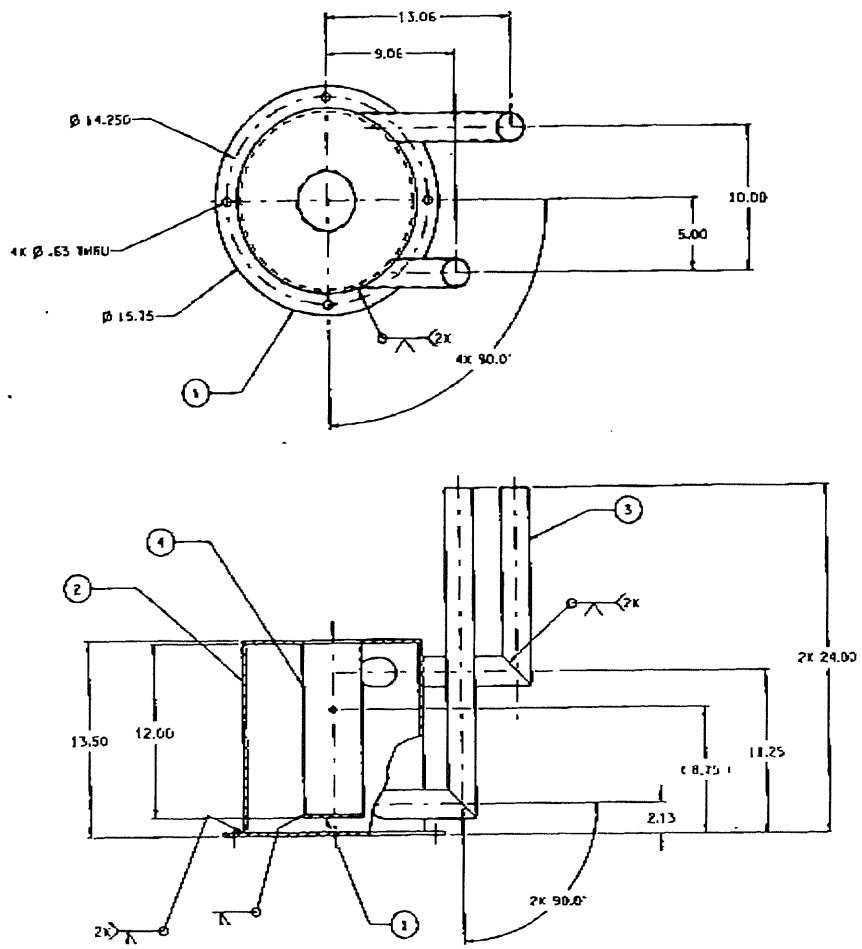

ITEM NO	PREF	BASE	SUFF	TITLE OR DESCRIPTION	QTY
4				TUBE Ø4.25X.098 WALL 304SS	1
3				TUBE Ø2.0X.065 WALL 304SS	AR
2				PIPE 12"-SCHEDULE 10S 304SS	1
1				PLATE .25 THK. 304SS	2

STOCK OR PART NO

SCALE: 1 : 4

DO NOT SCALE DRAWING

CAD FILE NAME: vessel.iso

STANFORD LINEAR ACCELERATOR CENTER
STANFORD UNIVERSITY STANFORD, CALIFORNIA

RADIATION MONITOR
CONCRETE BUNKER
BATH WELDMENT

--- E0 0