E706 CRYOSYSTEM DESIGN NOTE

E706EN014

TITLE: Pressure Vessel Engineering Note (14.1)

Liquid Argon, LAC Storage; RD3-17-NB85071

AUTHOR: Danny D. Burke, ME, RD/Cryogenics Department

DATE: October 22, 1986

REVIEWED BY:

Name	Date	Project Manager	Date
		[illegible]	27 Oct 86

PRESSURE VESSEL ENGINEERING NOTE
PER MANDATORY STANDARD SD37
(CHAPTER 14.1, LAB SAFETY MANUAL)

Prepared by: Dan Burke, ME

Preparation date: 4 February 1986

5.1 Description and Identification

Fill in the label information below:

This vessel conforms to engineering standard SD37

Vessel Title Liquid Argon, L.A.C. Storage

Vessel Number RD 3017; NB 85071 ← Obtain from Division/Section Safety Officer

Vessel Drawing Number Not Available

Maximum Allowable Working Pressure (MAWP) 55/FV PSIG

Working Temperature Range -289 °F .. 100 °F

Contents Liquid Argon

Designer/Manufacturer AMF Beaird, Inc.
Shreveport, Louisiana

Test Pressure (if tested at Fermi) Acceptance Date:

98.5 PSIG Hydraulic Pneumatic

Accepted as conforming to standard by
K. C. Stanfield ← Actual signature required in this space

of Division/Section Research Div

NOTE: Any subsequent changes in contents, pressures, temperatures, valving, etc., which affect the safety of this vessel shall require another review and test.

Reviewed by: [signature] Date: Oct. 20. 86

Director's signature (or designee) if the vessel is for manned areas but doesn't conform to the requirements of the standard.

Date:

Lab Property Number(s): NAL 49374

Lab Location Code: MES MWA (obtain from Safety Officer)

Purpose of Vessel(s): Support L.A.C. E706 experiment, primarily to supply Liquid Argon the L.A.C.

Vessel Capacity/Size: 44583 Gal. 85.3 ft. long x 10 ft. dia. (inner vessel)

Normal Operating Pressure (OP) 15-20 PSIG

MAWP-OP = 35 PSIG

Is the above enough to provide relief cracking pressure tolerance plus system uncertainty tolerance per M-9. Yes

As an option, provide a photo of the entire vessel in the Appendix.

List the numbers of all pertinent drawings and the location of the originals. (Append copies).

Drawing #	Location of Original
2220.1-ME-183293 (Sheet 2)	RD/Cryogenics Dept.

5.2 Design Verification

Does the vessel(s) have a U stamp? Yes X No _____. If "Yes", fill out data below and skip page 3; if "No", fill out page 3 and skip this page.

Staple photo of U stamp plate below.

Copy "U" label details to the side if photo is not clear of if copies are unreadable.

Copy data here:

Please refer to the attached drawing 6-9AA15-F

On the sketch below, circle all applicable sections of the ASME code per Section VIII, Division I. List the results of all calculations. (Insert copies of calculations in the appendix).

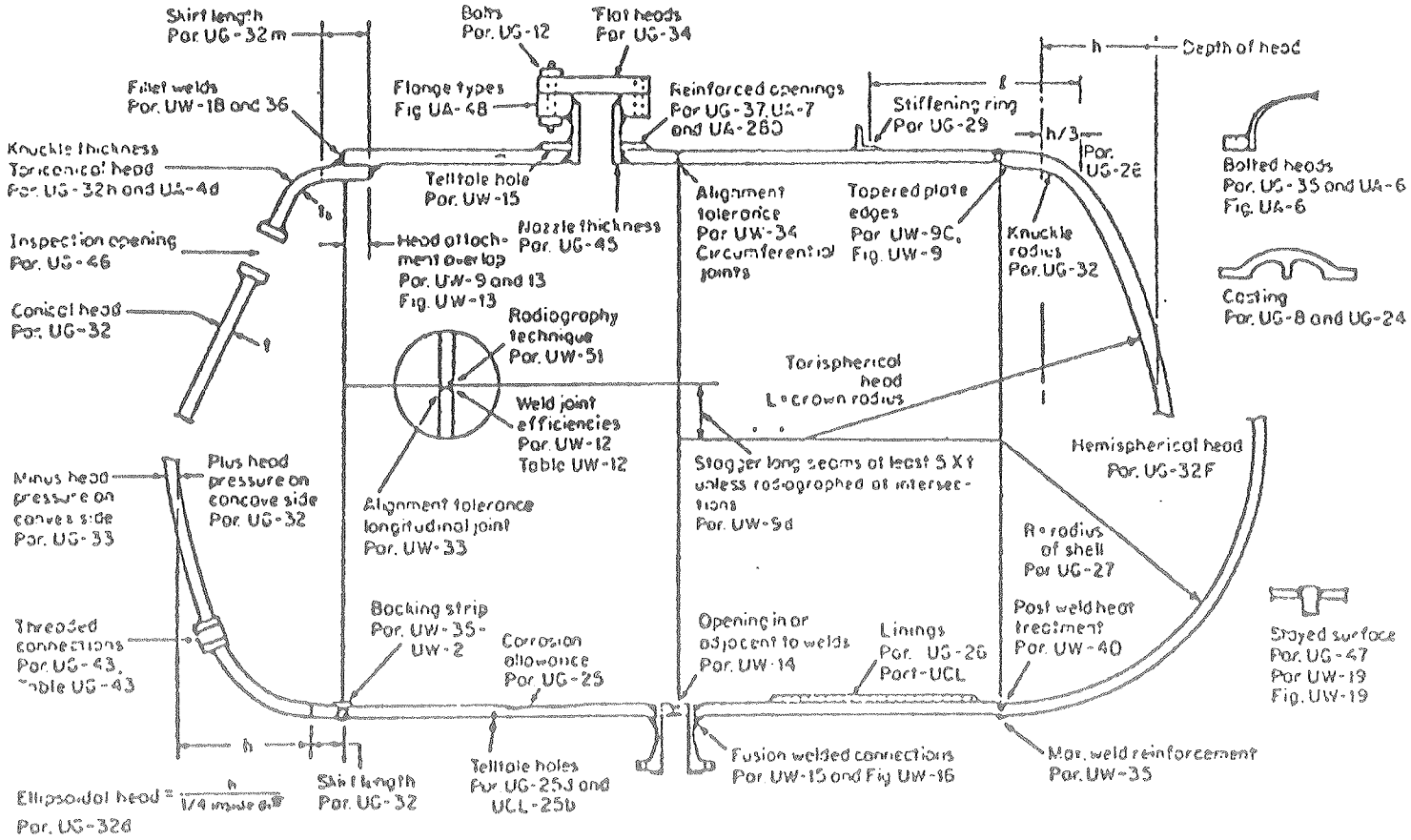

Summary of ASME Code

Item	Reference ASME Code Section	CALCULATION RESULT (Required thickness or stress level vs. actual thickness or calculated stress level)
		vs.
		vs.
		vs.
		vs.
		vs.

If this vessel is exceptional or had exceptional parts, list their details under 5.6. Yes_____ No_____

Revised October 1982

5.3 System Venting. Provide the system schematic in the Appendix, if the vessel safety is system sensitive.

Is it possible to isolate the relief valves by a valve from the vessel?

Yes_____ No X

If "Yes", the system must conform to M-5. Provide an explanation on the appended schematic. (An isolatable vessel, not conforming to M-5 violates the Standard.)

Is the relief cracking pressure set at or below the M.A.W.P.?

Yes X No_____ Actual setting 35 PSI
(A no response violates the Standard.)

Is the pressure drop of the relief system at maximum anticipated flow such that vessel pressure never rises above the following? (UG 125)

Yes X No_____

110% of MAWP (one relief)
116% of MAWP (multiple reliefs)
121% of MAWP (unexpected heat source)

Provide test or calculational proof in the Appendix.
(Non-conforming pressure rises violate the Standard.)

List of reliefs and settings:

Manufacturer	Relief	Setting	SCFM Flow Rate	Size
Anderson Greenwood	2x3 R.V.	35 PSIG	1220.6@193.3R	.785 sq.in. -H Orifice
BS & B	Rupture Disk	60.5 + 5%	33379.2@193.3R	6" Disk

Is the relief device an ASME stamped device? Yes X No _____

5.4 Operating Procedure

Is an operating procedure necessary for the safe operation of this vessel?

Yes____ No X . If "Yes", please append.

5.5 Welding Information

Has the vessel been fabricated in a Fermilab shop? Yes_____ No X

If "Yes", append a copy of the welding shop statement of welder qualification and a copy of the Welding Procedure Specification (WPS) used to weld this vessel.

5.6 Exceptional, Existing, Used, and Non-Manned Area Vessels

Is this vessel or any part thereof in the above categories? Yes____ No X

If "Yes", follow the Engineering Note requirements for documentation in free form below.

BACKGROUND

Complete specifications for this liquid argon dewar are on the following page, however, to summarize some of the pertinent data:

1. Surface area for CGA calculations,

   $A = 2981\ ft^2$ of surface of inner vessel.

2. Insulation is pearlite, and the inner to outer tank distance is,

   $t = 12\text{-}1/4''$.

3. The derated MAWP is,

   MAWP = 55 psig.

4. The actual maximum liquid volume is limited by the full trycock to,

   V = 44583 gallons liquid argon.

5. The outer vessel is not ASME certified.

R803216 RILEY-BEAIRD, SHREVEPORT, LA SHEET# 1

HORIZONTAL VESSEL DESIGN
A.S.M.E. SECTION VIII, DIVISION I, CODE

DATA FILE NAME: D_UCC.H2
DATE: THU, OCT 24 1985 TIME: 08:07:03

CUSTOMER	UNION CARBIDE CORP_
NUMBER	174453
VESSEL	50000 LIQ ARGON, H2, N2 OR O2 S
DESIGNER	W P CROW
DIAMETER REFERS TO	ID
HEAD TYPE	HEMI
INTERNAL PRESSURE	78. PSI
TEMPERATURE	100. DEG F
FLUID DENSITY	0.05022 LB/CU IN
CORROSION ALLOWANCE	0.00000 IN
VOLUME	12274104. CU IN
	7103. CU FT
	53138. GAL
EMPTY WEIGHT	30424. LB (MY 35,795#)
WATER WEIGHT	443218. LB
TOTAL OPERATING WEIGHT	646830. LB (MY 620,295#)
TOTAL HYDRO WEIGHT	473642. LB
SEAM TO SEAM LENGTH	1024.000 IN
	85.333 FT
TANGENT TO TANGENT LENGTH	1023.750 IN
	85.313 FT
OVERALL LENGTH	1143.188 IN
	95.266 FT
OUTSIDE AREA OF INNER VESSEL	429293. SQ IN
	2981. SQ FT
HYDROSTATIC TEST PRESSURE	118. PSI

	SHELL	HEADS
MATERIAL	SA-240-304	SA-240-304
BUCKLING CHART NUMBER	6	6
CORRODED THICKNESS	0.25000	0.18750 IN
OUTSIDE DIAMETER	119.50000	119.43750 IN
INSIDE DIAMETER	119.00000	119.06250 IN
NEW THICKNESS	0.25000	0.18750 IN
DESIGN STRESS	18750.	18750. PSI
JOINT EFFICIENCY	1.00000	1.00000
FOR DESIGN TEMPERATURE:		
MAX WORKING PRESSURE, CORRODED	78.58	118.04 PSI
MAX WORKING PRESSURE, NEW	78.58	118.04 PSI
FOR AMBIENT TEMPERATURE: RESET TO	55.00	
MAX WORKING PRESSURE, NEW	~~78.58~~	118.04 PSI

EXTERNAL PRESSURE CALCULATIONS

NEW AND COLD	0.5	16.6 PSI
OPERATING	0.5	16.6 PSI

MAXIMUM STIFFNER SPACING FOR 7. PSI EXTERNAL PRESSURE= 85. INCHES
REQUIRED MOMENT OF INERTIA 4.965 IN**4
BASED ON STIFFNER AREA OF 0.10 IN**2 ← ? $(4'')(\frac{1}{4}'') = 1\ IN^2$

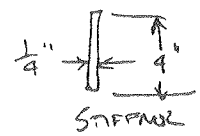

INPUT HAS BEEN VERIFIED CORRECT_____

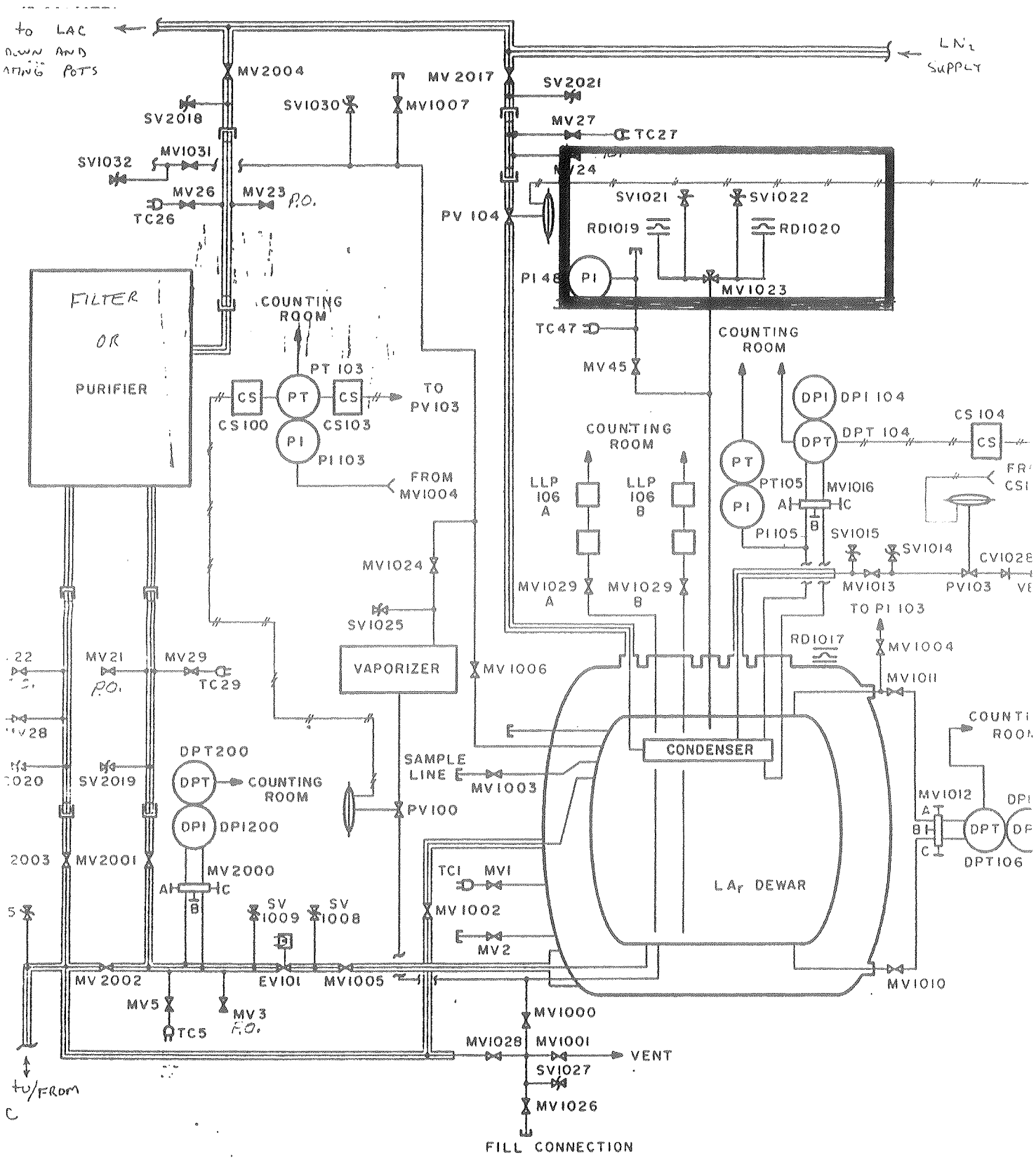

to LAC
DOWN AND
ATING POTS
LN2 SUPPLY
MV2004
SV2018
SV1030
MV1007
MV 2017
SV2021
MV27
TC27
SV1032
MV1031
MV26
MV23
P.O.
TC26
PV 104
SV1021
SV1022
RD1019
RD1020
PI 48
PI
MV1023
FILTER
OR
PURIFIER
COUNTING ROOM
PT 103
CS
PT
CS
TO PV103
CS100
CS103
PI
PI 103
FROM MV1004
TC47
MV45
COUNTING ROOM
DPI
DPI 104
DPT
DPT 104
CS 104
CS
COUNTING ROOM
LLP 106 A
LLP 106 B
PT
PT105
MV1016
PI
PI 105
SV1015
SV1014
CV1028
MV1024
MV1029 A
MV1029 B
MV1013
PV103
TO PI 103
SV1025
RD1017
MV1004
MV21
MV29
P.O.
TC29
VAPORIZER
MV 1006
MV1011
CONDENSER
DPT200
DPT
COUNTING ROOM
SAMPLE LINE
MV1003
SV2019
PV100
DPI
DPI200
MV1012
DPT
DPT106
MV2001
MV2000
TC1
MV1
LAr DEWAR
SV 1009
SV 1008
MV 1002
MV2
MV 2002
EV101
MV1005
MV1010
MV5
MV3
P.O.
TC5
MV1000
MV1028
MV1001
VENT
SV1027
MV1026
FILL CONNECTION
to/FROM

Pressure in this horizontal storage dewar which is located just east of the MW Detector Hall, will typically be 15-20 psig and will be controlled in two ways: drawing liquid from the bottom of the vessel, vaporizing it, and admitting it to the top to increase pressure or by sending liquid nitrogen through a heat exchanger which will reduce the dewar pressure by condensing argon.

Both the inner and outer vessel had to be modified to accommodate piping to and from the condensing heat exchanger. The inner vessel was modified and tested according to the requirements of Section VIII of the ASME Boiler and Pressure Vessel Code. In addition, the pressure rating of the inner vessel was derated from 60 to 55 psig in order to compensate for the added weight of liquid argon, over that of liquid hydrogen, the fluid which was assumed for the initial ASME certification.

With a derated pressure indicated on the stamp plate, the "U" stamp will remain valid upon approval from the National Board of the ASME. (Supporting documents are attached.)

A separate 14.1 note has been written on the LN_2 condenser to ensure adequate design and relief capacity with respect to the dewar.

The relief system is a switchable, non-isolatable dual system. Each system contains one relief valve and one rupture disk. The system 'on line' is determined by positioning a 3-way valve. The relief valves used are Anderson-Greenwood and complete specifications are included in this report. The burst disks are BS & B 6" disks.

Vent piping is arranged such that no discharge can hit people, equipment, or the dewar. And will not be plugged or otherwise reduced in capacity by weather conditions. In addition, these devices are installed and located in such a way that the cooling effect of the contents does not influence the performance of the devices.

Specifications for the relief device used and a system schematic are included in the following pages of this section. Note that all relief components are ASME certified.

BURST DISK SPECIFICATIONS

The burst disks used are 6" BS & B type RBP-5 disks with TFE lining. These are the reversed buckling disks, for vacuum applications, whose burst pressure is toleranced at ±5% of the stamped burst pressure which is 60 psig. They are to be used in conjunction with 6" BS & B type RB-7R, 150# ANSI, safety heads.

RELIEF VALVE SPECIFICATIONS

Anderson-Greenwood & Company, Houston, Texas (Note 4)

1.	Set pressure:	60 psig	(Note 1)
	Part number:	81S1624-H	
	Assy number:	3-1088	
2.	Capacity:	928 SCFM	(Note 2)
	Body:	CF8M, Ser. No. 70-5036	
3.	Service:	Liquid H_2	(Note 3)

Note (1) The set pressure is 60 psig, this has been changed, in compliance with ASME rules to 35 psig.

Note (2) This value (928 SCFM), intended for H_2 service, will not be referred to.

Note (3) The service will be argon. This change in service can be accomplished without valve modification as the seats are teflon.

Note (4) The valve is a 2x3 NPT with a stainless steel valve body.

CAPACITY SUMMARY

CAPACITY REQUIREMENT	CAPACITY AVAILABLE	SEE SECTION
Overfill, 100 GPM @1.16 MAWP	> 4117.1 GPM	5
External jacket 100.32 sq in	113.1 sq in	4
Fire condition 209.64 SCFM, air	34600 SCFM, air	6
Trapped volumes	No trapped volumes exist in the dewar piping	Refer to the attached schematic

FIRE CAPACITY REQUIREMENTS

$Q_{SA} = V_{SA} = G_i U A^{0.82}$ CGA S1.3 - 1980

G_i = 10.2 CGA Table 1

$U = \frac{\text{K Pearlite Sat W Argon } 100^{o}\text{F}}{\text{thickness}}$ Note: Value for air could be used if it were higher

K = 29.7 E-3 BTU/HR-FT-^{o}R LNG Materials & Fluids Data Handbook

t = thickness = (dia outer - dia inner) 1/2

t = 12-1/4"

U = 29.1037 E-3 BTU/HR ^{o}R

A = 2981 ft^2 surface area

$V_{SA} = 10.2\ (29.1037\ E\text{-}3)(2981)^{0.82}$

V_{SA} = 209.64 SCFM AIR @ STP

VACUUM LOSS REQUIREMENT

$Q_A = V_{SA} = \frac{(130 - t)}{4(1200-t)}\ G_i U A$ (4.9.1.1)

$U = \frac{\text{K Pearlite Sat @ } 100^{o}\text{F Lading}}{t_1}$

K = 29.71 E-3 BTU/HR-FT-R LNG Material & Fluid Data Handbook

t_1 = 12.25 inches

$U = \frac{29.71\ E\text{-}3}{12.25/12} = 29.1037\ E\text{-}3$ BTU/HR ^{o}F

A = 2981 ft^2 Surface area

G_i = 10.2 CGA Table 1

t = at 110% MAWP, 55 psig + 1 ATMOS (75.19 psia)

t = 191.26 ^{o}R = -268.74 ^{o}F

OUTER VESSEL RELIEF

Required area:

$A = 2.4\ E\text{-}4 \times 8.36\ lb/gal\ H_2O \times vol\ gal$

A = 100.32 sq in is required

This dewar contains nine 4-inch lift plates and one 4-inch rupture disk. For only the 9 lift plates whose lift is set to 1 psig, the area is 113.1 sq in available.

OVERFILL

The 100 gpm flow of liquid will be assumed into the dewar @ 1.16 MAWP = 63.8 PSIG, from a tank truck. Equation 3, Section A and Reference 3 were applied assuming 13.8 psid inlet piping pressure drop and a 35.30 psid pressure drop in the discharge header. The results are:

P_{inlet} = 50 psig = 55X1.16 - 13.8

Back pressure = 35 psig

Flow rate = 51.60 gpm liquid argon, for the relief valve

Assuming an 8.8 psid drop in the inlet piping and A 35.30 drop in the discharge header, for the burst disk, using Eq. 3, Section B, and Reference 4, the results are:

Flow rate = 4117.1 gpm liquid argon

All pertinent data used in these calculations are given on the next page. The total liquid capacity for the relief system is therefore

Total flow = 4168.70 gpm liquid argon

NOTE: The indicated equations are executed by the cited reference.

```
********   RELIEF VALVE FLOWS   TYPE=  80        *******


        PRESSURE=       64.696        PSIA
    BACKPRESSURE=       49.696        PSIA
            PE/P=       .76815
     TEMPERATURE=       187.48        DEGREES RANKINE
SPECIFIC VOLUME=        .12491E-01    CU FT/LBM
       VISCOSITY=       .11065E-03    LBF/FT-SEC
 REYNOLDS NUMBER=       .12816E+07
  VISCOSITY CORR=       1.0000
            AREA=       .78500        SQIN
     VALVE COEFF=       .81600

      FLOW RATE (GPM)=     51.603
      FLOW RATE (LB/SEC)=     9.2794
        *** FLOW IS A LIQUID FLOW ***
```

SEC A, EQ 3
REF 1

****** SATURATED ARGON ******

CRITICAL POINT	711.5264	PSIA	271.5480	RANKINE
TRIPLE POINT	9.993980	PSIA	150.8400	RANKINE

FOR PRES= 64.69595 PSIA TEMP= 187.4756 RANKINE
FOR TOTAL SPEC VOLUME= .7061402 CU FT/LBM
QUALITY= 1.000000 G= VAPOR F= LIQUID

VG, VF, VFG=	.7061402	.1249105E-01	.6936492	CU FT/LBM
HG, HF, HFG=	103.4833	40.51470	62.96861	BTU/LBM
UG, UF, UFG=	95.02898	40.36515	54.66383	BTU/LBM
SG, SF, SFG=	.7112793	.3754848	.3357946	BTU/LBM-R
CPG, CPF=	.1640853	.2831130	BTU/LBM-R	
CVG, CVF=	.8928597E-01	.1334515	BTU/LBM-R	
THERMAL COND G, F =	.4348394E-02	.5961152E-01	BTU/FT-HR-R	
PRANDTL NUMBER G,F=	.7986188	1.891906		
VISCOSITY G, F=	.5878902E-05	.1106541E-03	LBF/FT-SEC	
SONIC VELOCITY G,F=	589.9421	2067.119	FT/SEC	

REF: 5

******** BURST DISK FLOWS ********

EQ 3 SEC B
REF 4

PRESSURE=	69.696	PSIA
BACKPRESSURE=	50.000	PSIA
PE/P=	.71740	PSIA
EXPANSION COEFF=	1.0000	
REYNOLDS NUMBER=	.17384E+08	
FRICTION FACTOR=	.13793E-01	
RESISTANCE FACTOR=	.98321	
THROAT DIAMETER=	6.0000	INCHES
SAFETY HEAD DIAM=	6.0100	INCHES

FLOW RATE (GPM)= 4117.1
FLOW RATE (LB/SEC)= 736.10
*** FLOW IS A LIQUID FLOW ***

STATE VARIABLES FROM NBS, PSIA, RANKINE, ** ARGON **
CUFT/LBM, LBF/FT-SEC, BTU/LBM, BTU/LBM-DEG, FT/SEC, VAPOR, LIQUID

PRES, TEMP, SPEC VOL, VISC=	69.696	189.33	.65842
	.12563E-01	.59459E-05	.10782E-03
HG, HF, HFG, UG, UF, UFG=	103.55	41.046	62.509
	95.062	40.884	54.179
CPG, CPF, CVG, CVF, SPEED=	.16625	.28423	.89852E-01
	.13176	591.23	2056.2

****

RELIEF VALVE AND BURST DISK CAPACITY

While a valid argument can be made that the effects of friction on a compressible flow must be considered, this type of calculation is hardly justified given the obvious safety factor of this relief system. The computation involving friction and compressibility has been made but will not be presented. Very conservative pressure drops have been assumed.

Taking the dewar at 1.21 MAWP, or

$$P_D = 81.246 \text{ psia}$$

and assuming a conservative 10 psid drop in the inlet and outlet piping for both the relief valve and rupture disk leads to a device inlet pressure of $P = 71.246$ psia, and an exit pressure of $P_E = 24.696$ psia. A complete listing of the fluid properties obtained from Reference 5 follow on the next page. Important values are:

$P = 71.246$ psia

$T = 193.27$ R

$V_G = 0.66079 \text{ ft}^3/\text{lbm}$

$K = C_p/C_v = 1.8415$

For the relief valve, applying Eq. 1, Section A, and Reference 1 leads to a sonic flow rate of:

1220.6 SCFM, AIR

or

2.3606 lb/sec

For the burst disk, applying Eq. 1, Section B, and Reference 2 leads to a sonic flow of:

33379.2 SCFM,AIR

or

64.545 lb/sec (burst disk)

Total Capacity : 34600 SCFM, AIR

A complete listing of the inputs and results are given on the next page, important values are:

Relief valve : nozzle coefficient - 0.816
area - 0.785 sq in

Burst disk throat area : 6 inch

NOTE: The indicated equations are executed by the cited reference.

```
********   RELIEF VALVE FLOWS   TYPE=  80        *******
```

EQ 1 SEC A
REF 1

```
        PRESSURE=        71.246        PSIA
    BACKPRESSURE=        24.696        PSIA
            PE/P=        .34663
 SPEC HEAT RATIO=        1.8415
       PCRITICAL=        .46370
     TEMPERATURE=        193.27        DEGREES RANKINE
SPECIFIC VOLUME=         .66079        CU FT/LBM
EXPANSION COEFF=         390.02
            AREA=        .78500        SQIN
ASME VALVE COEFF=        .81600
        FLOW RATE (SCFM)=     1220.6
      FLOW RATE (LB/SEC)=     2.3603
        *** FLOW IS SONIC ***
```

```
********   BURST DISK FLOWS   ********
```

EQ 1 SEC B
REF 2

```
        PRESSURE=        71.246        PSIA
    BACKPRESSURE=        24.696        PSIA
            PE/P=        .34663
 SPEC HEAT RATIO=        1.8415
 PCRITICAL RATIO=        .46370
     TEMPERATURE=        193.27        DEGREES RANKINE
SPECIFIC VOLUME=         .66079        CU FT/LBM
 THROAT DIAMETER=        6.0000        INCHES

      FLOW RATE (SCFM)=     33379.2
      FLOW RATE (LB/SEC)=     64.545
        *** FLOW IS SONIC ***
        *** FLOW IS SONIC ***
```

1

REF 5

```
            ******  SATURATED ARGON  ******

   CRITICAL POINT       711.5264     PSIA      271.5480      RANKINE
     TRIPLE POINT       9.993980     PSIA      150.8400      RANKINE

   FOR PRES=      81.24595     PSIA   TEMP=      193.2732      RANKINE
   FOR TOTAL SPEC VOLUME=      .5696304     CU FT/LBM
                 QUALITY=      1.000000            G= VAPOR F= LIQUID

VG, VF, VFG=     .5696304        .1272154E-01     .5569088      CU FT/LBM
HG, HF, HFG=    103.6829         42.18165         61.50128      BTU/LBM
UG, UF, UFG=    95.11835         41.99038         53.12797      BTU/LBM
SG, SF, SFG=     .7021373        .3840384         .3180989      BTU/LBM-R
   CPG, CPF=     .1712224        .2870655       BTU/LBM-R
   CVG, CVF=     .9108437E-01    .1285709       BTU/LBM-R
THERMAL COND G, F =     .4575691E-02     .5722409E-01  BTU/FT-HR-R
PRANDTL NUMBER G,F=     .8205578         1.843746
    VISCOSITY G, F=     .6091200E-05     .1020931E-03  LBF/FT-SEC
SONIC VELOCITY G,F=     593.7130         2029.238      FT/SEC
```

$K = CPG/CVG = 1.8798$

```
            ******  ARGON  ******

   CRITICAL POINT       711.5264     PSIA      271.5480      RANKINE
     TRIPLE POINT       9.993980     PSIA      150.8400      RANKINE

   FOR PRES=      71.24595     PSIA   TEMP=      193.2732      RANKINE
SPECIFIC VOLUME=       .6607920      CU FT/LBM
H, U, S=     104.1336        104.0113        .7103446    BTU/LBM-S(R)
CP, CV =     .1632242        .8863852E-01  BTU/LBM-R
  THERMAL COND=     .4489736E-02  BTU/FT-HR-R
PRANDTL NUMBER=     .7934417
     VISCOSITY=     .6062458E-05  LBF/FT-SEC
SONIC VELOCITY=     599.3550      FT/SEC
```

$K = Cp/cv = 1.8415$

HOOP STRESS

From "Piping Engineering", using a creep value of y = 0.4, the maximum allowable pressure is given by:

$P = S \times P/S$ S = allowable stress
P = maximum internal service pressure

According to "Piping Engineering", for 0.00 corrosion allowance, the lower P/S, the smaller the allowable pressure, the smallest tabulated value is 0.0291 between 1/8" and 6" pipe. This value is for 6" Sch 5S pipe. Using S = 30000 psi, P/S = 0.0291.

Maximum P = 873 PSIG

This pressure will not exist in the dewar piping, and all other P/S values allow an even higher pressure. All piping joints are welded. Reference: "Piping Engineering", Chemtron Corporation, 1971.

RELIEF VALVE FLOW RATE

(Anderson-Greenwood Series 80)

From the AGCO catalog the equation:

$$W\ (lb/hr) = CKAP_1 \left(\frac{T}{ZM}\right)^{1/2}$$

can be converted so that real fluid properties may be used. Since

$$Z = \frac{P\nu}{RT},\ R = \frac{UR}{M},\ UR = 1545\ \frac{ft\text{-}lb}{mol\text{-}R},\ \text{then } Z = \frac{P\nu}{MT}\ \frac{144}{1545}$$

Converting also to lb/sec leads to:

(1) $W = 909.874\ E\text{-}6\ C\ K_s A\ (P_1\ \rho_1)^{1/2}$

This is for sonic flow, i.e., $PE/P_1 \leq (2/k+1)^{k/k-1}$, where PE is the exit pressure.

and

$$C = 520\left\{K\ \left(\frac{2}{k+1}\right)^{\left(\frac{k+1}{k-1}\right)}\right\}^{1/2}$$

Ref: API RP-520, Barron, AGCO. Text Books, ASME

C is the expansion factor for sonic flow where $K = C_p/C_v$

A = orifice area (in^2)

K_s = ASME nozzle coefficient

= 90% K_D actual

P_1 = inlet pressure (psia)

ρ_1 = inlet density (lb/ft^3)

Also, from the AGCO catalog, API-RP-520, ASME, and a few text books, an equation, converted the same way as Eq. (1), would be:

(2) $W = 668.756\ E\text{-}3\ C\ K_s\ A\ (P_1\ \rho_1)^{1/2}$ (lb/sec)

This is for subsonic flow, i.e. $PE/P_1 > (2/k+1)^{k/k-1}$

where

$C = \{K/K-1\ [(PE/P_1)^{2/K} - (PE/P_1)^{K+1/K}]\}^{1/2}$, the expansion factor

$K = Cp/Cv$

K_s = ASME nozzle coefficient

= 90% K_D actual

A = orifice area (in^2)

PE = exit pressure (psia)

P_1 = inlet pressure (psia)

ρ_1 = inlet density (lb/ft^3)

An equation for liquid flow from the AGCO catalog or API RP-520 would be:

$$Q(gpm) = \frac{38 * K_S\ K_p\ K_W\ C}{* G} \qquad (P_1 - P_2)^{1/2}\ A$$

As before, since tables are used for properties, and since K_p and K_v can be taken as 1.00 for conventional valves, the equation can be rewritten as

(3) $W\ (lbs/sec) = 418.0348\ E\text{-}3 * C * K_S * A\ [\rho(P_1 - P_2)]^{1/2}$

K_p = overpressure correction factor

K_w = backpressure correction factor

R_e = Reynold's number

Where C is the viscosity correction factor taken as 1.00 for $R_e \geq 100000$. Since C is a function of the R_e it is necessary to approximate the proper value for $R_e < 100000$ and iterate for the correct value. Five linear equations are used for the calculation depending on R_e.

This equation can also be found in API RP-520, Crane, and several other references. It has been checked for series 80 valves.

Note that values obtained through the use of equations (1), (2), or (3) will not be identical to the cataloged values since the actual properties of the real gas are used. The ideal, isentropic 'properties' are not generally the same, especially over ranges of pressure near the saturation line.

The FTN5 subroutine "SAT PRES", D. Burke, 1985, is one source of saturation properties for argon, nitrogen, and oxygen (also "SAT TEMP", D. Burke, 1985). This subroutine is a converted form of the NBS program "FLUIDS", a generally accepted routine.

For series 80 and 90 RV's, the subroutine "AGRVIA", D. Burke, 1985, calculates flow rates for input values of PE and P_1 using saturation properties obtained from "SAT PRES". The liquid flows for series 80 valves computed by "AGRVIA", have been checked against the manufacturers values, but this has not been done for series 90 RV's.

BURST DISK FLOW RATE

An appropriate equation for frictionless flow through a burst disk is from Fike.

For sonic flow:

1) $325.57306\ E\text{-}3\ d^2\ (2/k+1)^{1/k-1}\ [P_1\ \rho_1\ (k/k+1)])^{1/2} = W$ (lb/sec)

For subsonic flow:

2) $325.57306\ E\text{-}3\ d^2\ \{P_1\ \rho_1\ [(PE/P_1)^{2/k} - (PE/P)^{k+1/k}]\}^{1/2} = W$ (lb/sec)

Flow is sonic if

$PE/P \leq (2/k+1)^{k/k-1}$ and the mass flow becomes constant.

Flow a liquid flow:

(3) $525.23\ E\text{-}3\ d^2\ (1/\kappa)^{1/2}\ [P_1\ \rho_1\ (1 - PE/P)]^{1/2} = W$ (lb/sec)

Reference: Crane Technical Bulletin No. 410

NOTE: These equations are modified so that the real properties, not the ideal gas properties can be used. This was done by noting that the Fike equation should have included the compressibility factor, z. Then z = PV/RT is substituted into the equation. (See Section A.)

where P_1 = inlet pressure (psia)

PE = back pressure (psia)

ρ_1 = throat density (lb/ft^3)

K = ratio of spec heats, Cp/Cv = k

d = diameter of the disk (inches)

$\kappa = f\ (L/D) + \kappa_1$

- f = the friction factor
- L/D = 75 for disk and safety head, reference "BS & B, Rupture Disk and Safety Head Technology"
- κ = loss of the form $\kappa\ v^2/2g$
- κ_1 = 0, since the flow calculation includes only the disk and safety head.

Since the liquid calculation includes the friction factor, an iterative calculation is made. The calculations are made by applying "NOZZLBD", D. Burke, 1985, "SAT PRES", D. Burke, 1985 - for the fluid properties, and "FRIC", D. Burke, 1985, for the friction factor.

REFERENCES

1) Program "AGRV2A", D. Burke, evaluates flow rates for series 80 and series 90 Anderson-Greenwood relief valves.

2) Program "BURSD1A", D. Burke, evaluates flow rates for burst disks.

3) Program "AGRV1A", D. Burke, evaluates flow rates for series 80 and 90 Anderson-Greenwood relief valves. The saturated properties are automatically evaluated.

4) Program "TSTBUR2", D. Burke, evaluates flow rates for burst disks. The saturated properties are automatically evaluated.

5) Program "PROPSA", D. Burke, evaluates properties using "NBS", D. Burke. "NBS" is from the National Bureau of Standards program "FLUIDS".

Phone: 312/784-0613

PRES TEST OF ARGON STOR DEWAR CONDENSER

LICENSED AND INSURED

SECTION [illegible] Q.C. APP. [illegible]
PAGE 6 OF 11 DATE 1-7,9,-9,2
REV. A.I. APP. [illegible]
DATE DATE [illegible]

HAYES BOILER & MECHANICAL, INC.

ESTABLISHED 1918

1505 W. Leland Ave. • Chicago, Il. 60640-4691

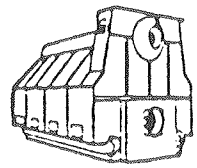

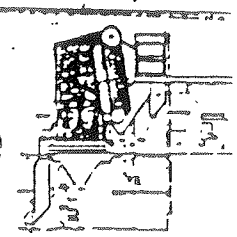

TRAVEL SHEET A FULL SERVICE CONTRACTOR

BOILERS OR UNFIRED PRESSURE VESSELS

CUSTOMER: HAYES Boiler & Mech. Inc.
JOB LOCATION: Fermi National Labs. Batavia Ill.

NATIONAL BOARD NO.:
DESIGN PRESSURE: 78 P.S.I.
JOB DESCRIPTION: Fit-up & weld 3-nozzles

	QUALITY CONTROL INSPECTOR	DATE	AUTHORIZED INSPECTOR	DATE
MILL TEST REPORTS:			[illegible]	3/31/86
DESIGN SPECIFICATIONS:	N/A			
HEAT TREATING:	N/A			
WELDING PROCEDURES #GTAW	[illegible]	3-28-86	[illegible]	3/31/86
WELDER CERTIFICATIONS:	[illegible]	3-28-86	[illegible]	3/31/86
NON DESTRUCTIVE EXAMINATION:	N/A			

SPECIAL HOLD POINTS:

JOINT	FIT-UP QUAL. CONTROL INSPECTOR	FIT-UP DATE	FIT-UP AUTHORIZED INSPECTOR	FIT-UP DATE	PNEUMATIC ~~HYDRO~~ QUAL. CONTROL INSPECTOR	PNEUMATIC ~~HYDRO~~ DATE	PNEUMATIC ~~HYDRO~~ AUTHORIZED INSPECTOR	PNEUMATIC ~~HYDRO~~ DATE
N1 ~~C1~~			[illegible]	3/31/86			[illegible]	4/5/86
N2 ~~C2~~			[illegible]	3/31/86			[illegible]	4/5/86
N3 ~~C3~~			[illegible]	3/31/86			[illegible]	4/5/86
C4								
C5								
L1								
L2								
L3								
L4								
L5								

TUBE SHEETS

1								
2								

INSTALLATION, REPAIR & RENTAL OF HIGH & LOW PRESSURE BOILERS
STACKS — REFRACTORY — TANKS — INSULATION — A.S.M.E. CODE WORK — SHOP FABRICATION
PIPING — AIR CONDITIONING — INSTALLATION & SERVICE OF BURNERS — CONTROLS
FACTORY DEALER FOR RAY BURNERS & PARTS
AREA REP. NATIONWIDE BOILER RENTAL
SERVICE & PARTS FOR CLEVELAND CONTROLS

QW-482 WELDING PROCEDURE SPECIFICATION (WPS)

(See QW-201.1, Section IX, 1974 ASME Boiler and Pressure Vessel Code)

Company Name: DAN HAYES BOILER AND REPAIR

Welding Procedure Specification No. GTAW-SMAW8-8 Date 3-16-71 Supporting PQR No. G-S-8a, G-S-8b

Revisions

Welding Process(es): GTAW & SMAW Type(s): MANUAL

JOINTS (QW-402)

Groove Design: V

Backing: Yes ___ No X

Backing Material (Type): N.A.

Other

BASE METALS (QW-403)

P No. 8 to P. No. 8

Thickness Range: .0625 to .864"

Pipe Dia. Range: 1" AND OVER

Other: --

FILLER METALS (QW-404)

	Root	Fill
F No.	6	5
A No.	8	8
Other		
Spec No. (SFA)	5.9	5.4
AWS No. (Class)	ER308	E308-16
Size of Electrode	1/16, 3/32, 1/8	3/32, 1/8"
Size of Filler	3/32"	3/32, 1/8"

Electrode-Flux (Class): N.A.

Consumable Insert: N.A.

Other: --

POSITION (QW-405)

Position of Groove: 6G

Welding Progression: UPHILL

Other

PREHEAT (QW-406)

Preheat Temp.: NOT CONTROLLED

Interpass Temp.: 300°F MAX

Preheat Maintenance: --

Other: --

POSTWELD HEAT TREATMENT (QW-407)

Temperature: NONE

Time Range: --

Other: --

GAS (QW-408)

Shielding Gas(es): ARGON

Percent Composition (mixtures): 100%

Flow Rate: 20-40 CFH

Gas Backing: NONE

Trailing Shielding Gas Composition: --

Other: --

ELECTRICAL CHARACTERISTICS (QW-409)

Current AC or DC: DC Polarity: STRAIGHT

Amps (Range): 100-150 Volts (Range): 10-12

Other: SMAW: DCRP 65-120A 20-24V

TECHNIQUE (QW-410)

Travel Speed (Range): 4-12 IPM

String or Weave Bead: STRING & WEAVE

Orifice or Gas Cup Size: #6 TO #10

Initial & Interpass Cleaning (Brushing, Grinding, etc): BRUSHING, CHIPPING & GRINDING

Method of Back Gouging: N.A.

Oscillation: 4X ROD DIAMETER MAX

Contact Tube to Work Distance: N.A.

Multiple or Single Pass (per side): MULTIPASS

Multiple or Single Electrodes: SINGLE

Other: --

QW-483 PROCEDURE QUALIFICATION RECORD (PQR)
(See QW-201.2, Section IX, 1974 ASME Boiler and Pressure Vessel Code)

Company Name: DAN HAYES BOILER AND REPAI
Procedure Qualification Record No.: G-S 8b Date: 3-16-71
WPS No.: GTAW-SMAW 8-8
Welding Process(es): GTAW & SMAW
Types (Manual, Automatic, Semi-Auto.): MANUAL

COMMENTS (QW-[illegible])

Groove Design Used

BASE METALS (QW-403)
Material Spec.: SA 312
Type or Grade: 304
P No.: 8 to P No.: 8
Thickness: .432"
Diameter: 6"
Other:

POSTWELD HEAT TREATMENT (QW-407)
Temperature: NONE
Time: --
Other: --

GAS (QW-408)
Type of Gas or Gases: ARGON
Composition of Gas Mixture: 100%
Other: --

FILLER METAL (QW-404)

	Root	Fill
Weld Metal Analysis A No.	8	8
Size of Electrode	3/32	3/32, 1/8"
Filler Metal F No.	6	5
SFA Specification	5.9	5.4
AWS Classification	ER308	E308-16
Other	--	--

ELECTRICAL CHARACTERISTICS (QW-409)
Current: DIRECT
Polarity: STRAIGHT
Amps.: 100-140 Volts: 10-12
Other: SMAW: DCRP 65-120A 20-23V

POSITION (QW-405)
Position of Groove: 6G
Weld Progression (Uphill, Downhill): UPHILL
Other:

TECHNIQUE (QW-410)
Travel Speed: 4-12 IPM
String or Weave Bead: STRING & WEAVE
Oscillation: 4X ROD DIAMETER MAX
Multipass or Single Pass (per side): MULTIPASS
Single or Multiple Electrodes: SINGLE
Other: --

PREHEAT (QW-406)
Preheat Temp.: NONE
Interpass Temp.: 300°F MAX
Other: --

This form (E00007) may be obtained from the Order Dept., ASME, 345 E. 47th St., New York, N.Y. 10017

QW-483 (Back)

Tensile Test (QW-150)

Specimen No	Width	Thickness	Area	Ultimate Total Load lb.	Ultimate Unit Stress psi	Character of Failure & Location
FIG. Q-6(b) 1	.760	.320	.2432	19,700	81,000	Base Metal - Ductile
FIG. Q-6(b) 2	.716	.324	.2319	18,850	81,300	Base Metal - Ductile

Guided Bend Tests (QW-160)

Type and Figure No.	Result
FIG. Q-7.1 SIDE	PASSED - NO DEFECTS
FIG. Q-7.1 SIDE	PASSED - NO DEFECTS
FIG. Q-7.1 SIDE	PASSED - NO DEFECTS
FIG. Q-7.1 SIDE	PASSED - NO DEFECTS

Toughness Tests (QW-170)

Specimen No.	Notch Location	Notch Type	Test Temp.	Impact Values	Lateral Exp		Drop Weight	
					% Shear	Mils	Break	No Break

Fillet Weld Test (QW-180)

Result — Satisfactory: Yes _____ No _____ Penetration into Parent Metal: Yes _____ No _____

Macro—Results _____

Other Tests

Type of Test _____

Deposit Analysis _____

Other _____

Welder's Name: SALVADOR ALVARADO Clock No. 320-22-0362 Stamp No. _____

Tests conducted by: TAUSSIG ASSOC. R. D. JONES Laboratory Test No. _____

We certify that the statements in this record are correct and that the test welds were prepared, welded and tested in accordance with the requirements of Section IX of the ASME Code.

Date 11-14-79

Manufacturer Hayes Boiler & Mechanical

By Thomas E. Kelleher

(Detail of record of tests are illustrative only and may be modified to conform to the type and number of tests required by the Code.)

INFORMATION TRANSFERRED FROM OLDER PQR FORM 11-14-79

Mark A. Hinman

MARK A. HINMAN

QW-404 MANUFACTURER'S RECORD OF WELDER OR WELDING OPERATOR QUALIFICATION TESTS
(See QW-301, Section IX, 1974 ASME Boiler and Pressure Vessel Code)

Welder Name Roland Leavitt Check No. 339-48-916 Stamp No.
Welding Process GTAW - SMAW Type Manual
In accordance with Welding Procedure Specification (WPS) GTAW - SMAW 8-8
Backing (QW-402) None
Material (QW-403) Spec. A312 Ty 304 to A312 Ty 304 of P No. 8 to P No. 8
Thickness .0625" to .872" Dia. Over 1"
Filler Metal (QW-404) Spec. No. SFA 5.4 & 5.9 Class No. E308-I6, ER308 F No. 6
Other - -
Position (QW-405) (1G, 2G, 6G) 6G
Gas (QW-408) Type Argon % Composition 100
Electrical Characteristics (QW-409) Current Direct Polarity GTAW-Straight SMAW-Reverse
Weld Progression (QW-410) Uphill
Other - -

For Information Only

Filler Metal Diameter and Trade Name 3/32" Arcos
Submerged Arc Flux Trade Name - -
Gas Metal Arc Welding Shield Gas Trade Name - -

Guided Bend Test Results QW-462.2(a), QW-462.3(a), QW-462.3(b)

Type and Fig. No.	Result
SIDE	
QW-462.2a	Satisfactory
QW-462.2a	Satisfactory
QW-462.2a	Satisfactory
QW-462.2a	Satisfactory

Radiographic Test Results (QW-304 & QW-305)
For alternative qualification of groove welds by radiography

Radiographic Results:

Fillet Weld Test Results [See QW-462.4(a), QW-462.4(b)]

Fracture Test (Describe the location, nature and size of any crack or tearing of the specimen)

Length and Per Cent of Defects inches %
Macro Test—Fusion
Appearance—Fillet Size (leg) in. X in. Convexity in. or Concavity in.

Test Conducted by Mark A. Hineman Laboratory—Test No. Taussig Assoc. 23815
Mark A. Hineman, Staff Engrg.
We certify that the statements in this record are correct and that the test welds were prepared, welded and tested in accordance with the requirements of Sections IX of the ASME Code.

Organization 1505 W. LELAND & 4650 N. CLARK
CHICAGO, ILLINOIS 60640

Date March 2 1978 By [signature]

(Detail of record of tests are illustrative only and may be modified to conform to the type and number of tests required by the Code.)
NOTE: Any essential variables in addition to those above shall be recorded.

(1/76) This form (EC 308) may be obtained from the Order Dept., ASME, 345 E. 47 St., New York, N.Y. 10017

Fermilab

April 14, 1986

TO: KELLY DIXON

FROM: J. KILMER JK

SUBJECT: LEVEL LIMIT ON THE 50,000 GALLON DEWAR

One of the points Bill Cooper brought out at the last meeting was if a level limit for weight of fluid in the E-706 argon dewar existed. I have checked the old papers from Riley Beaird and there is, in fact, a limit of 45,894 gallons of argon at a density of 12.275 lb/gal. Notice that this is a weight limit of 563,348 lbs. Since they have the density wrong and liquid argon at NBP is 11.68 lb/ft^3 we could actually put 48,231 gallons in the dewar for that weight.

We will only be able to fill about 5000 gallons at a time because of the weight limit on the over-the-road trucks. As it is not too likely that we will ever need >45,000 gallons and it takes many deliveries to get anyway I think the likelyhood of over filling is small. I will have the full trycock extended to 28 inches down from the top of the dewar. This corresponds to an actual volume of 44,583 gallons. Procedures for filling the tank will have to make use of the full trycock.

JK/bf

xc: W. Cooper
LAr Dewar File

APRIL 9, 1986

TO: KELLY DIXON

FROM: J. KILMER

SUBJECT: E706 LIQUID ARGON DEWAR PRESSURE TEST

ON APRIL 5, 1986 THE 50,000 GALLON LIQUID ARGON DEWAR WAS PNEUMATICALLY PRESSURE TESTED TO 97.5 PSIG TO REAFFIRM THE CODE STAMP OF THE VESSEL AFTER THE THREE NEW STUBS WERE ADDED FOR THE INTERNAL CONDENSER. THERE WERE NO UNUSUAL ~~OCCURANCES~~ OCCURRENCES. IN ATTENDANCE FOR THE TEST WERE PAT HEALEY AND JERRY DOMOLECZNY. BOB SCHERR ~~FOR~~ FROM RD/SAFETY MONITORED THE TEST AND THE CODE INSPECTOR VERIFIED THE PRESSURE TEST FOR CERTIFICATION. PLEASE SEE THE ATTACHED SHEETS.

CC BOB SCHERR

LAR DEWAR FILE

PNEUMATIC TEST OF 50,000 GALLON DEWAR

Design Pressure 60 + 15 + 3 psi = 78 psi

Pneumatic Test Pressure (1.25) x 78 psi = 97.5 psi

PRESSURE	TIME	NOTES
		Stub
49 psi	[illegible]	
58.5 psi	1156	holding for 10 min.
68 psi	[illegible]	[illegible]
78 psi	1323	[illegible]
88 psi	1355	[illegible]
97.5 psi	1450	[illegible]
	1455	[illegible]
78 psi		

Date 25 FEB 1986

PRESSURE TESTING PERMIT*

of Test ☐ Hydrostatic ☒ Pneumatic

st Pressure: 93.25 psiG Maximum Allowable Working Pressure: 55 psiG

tems to be Tested: INNER VESSEL OF E706 LAr 50000 GALLON DEWAR SPECIFICALLY TO CHECK WELDS AT NEW NOZZLE PENETRATIONS FOR THE INTERNAL CONDENSER.

cation of Test: NEXT TO MW BLDG Date and Time:

zards Involved: EXPOSURE OF UNNECESSARY PERSONNEL TO TEST. DEWAR IS INSIDE A VACUUM JACKET AND HAS PREVIOUSLY BEEN HYDRO TESTED TO 118 PSIG. NOZZELS WILL BE INSTALLED PER CODE.

fety Precautions Taken: A CONCRETE BARRIER MADE OF SHIELDING BLOCKS WOULD BE ERECTED AROUND THE LIQUID NITROGEN PUMP TO PROTECT PERSONNEL DOING THE TEST.

ecial Conditions or Requirements: AREA OF MW AND MP BLDGS MUST BE CLEARED OF ALL UNNECESSARY PERSONNEL. ROADS AROUND THAT AREA OF NECESSITY MUST BE CLOSED. RECOMMEND TEST BE DONE ON SATURDAY.

st Coordinator: JIM KILMER Dept/Date

vision/Section Safety Officer: R Cohen RO Dept/Date 4-5-86

vision/Section Head: Dept/Date

sults:

tness: Robert E. Cohen RO Dept/Date 4-5-86
(Safety Officer or Designee)

ust be signed by Division/Section Safety Officer and Division Head prior to conducting test. It is the responsibility of the test coordinator to obtain signatures.

'85

24 HOUR SERVICE
LICENSED AND INSURED

Day or Night
Phone:
312/784-0613

HAYES BOILER & MECHANICAL, INC.

ESTABLISHED 1918

1505 W. Leland Ave. • Chicago, Il. 60640-4691

A FULL SERVICE CONTRACTOR

April 21, 1986

Fermi National Accelerator Labs.
P. O. Box 500
Batavia, Illinois 60510

'86 APR 25 A10:43
RECEIVED
FERMILAB
CONTRACTS

Attention : Mr. Richard A. Mau
Fabrication Specialist

Dear Sir:

Enclosed please find the R-1 form for the work we performed on the pressure vessel (National Board #85071) at your location.

Respectfully,

Hayes Boiler & Mechanical, Inc.

Donald Cooper

DC/mm

INSTALLATION, REPAIR & RENTAL OF HIGH & LOW PRESSURE BOILERS
STACKS — REFRACTORY — TANKS — INSULATION — A.S.M.E. CODE WORK — SHOP FABRICATION
PIPING — AIR CONDITIONING — INSTALLATION & SERVICE OF BURNERS — CONTROLS
FACTORY DEALER FOR RAY BURNERS & PARTS
AREA REP. NATIONWIDE BOILER RENTAL
SERVICE & PARTS FOR CLEVELAND CONTROLS

FORM U-1 MANUFACTURERS' DATA REPORT FOR UNFIRED PRESSURE VESSELS

As required by the Provisions of the ASME Code Rules

1. Manufactured by AMF BEAIRD, INC., SHREVEPORT, LOUISIANA
(Name and address of manufacturer)

2. Manufactured for UNION CARBIDE CORPORATION - LINDE DIVISION - NEW YORK, NEW YORK
(Name and address of purchaser)

3. Type Horiz. (Horiz. or Vert.) Kind Tank (Tank, Jacketed, Heat Exch.) Vessel No. (174453) (Shop Order) ( ) (Order & Item No.) Nat'l. Bd. No. 85071 Yr. Built 1970

Items 4–9 incl. to be completed for single wall vessels (such as air tanks), jackets of jacketed vessels, or shells of heat exchangers.

4. SHELL: Material Outer Jacket SA-283-C (Name and Spec. No.) T.S. 55,000# (Fig. or T.S. & Spec. No. T.S.) Nominal 5/16 Thickness ___ in. Corrosion Allowance 0 in. Diam. 12 Ft. 0 in. Length 93 Ft. 10-1/4 in.
Non Code

5. SEAMS: Long. Dbl. Butt (Butt, Dbl., Single, Lap, Butt) H.T. No (Yes or No) R.T. No (Spot or Complete) Sectioned No (Yes or No) Efficiency 65 %

Girth Dbl. Butt H.T. No R.T. No Sectioned No No. of Courses 14

If riveted describe seams fully on reverse side of form.

6. HEADS (a) Material SA-283-C T.S. 55,000# (b) Material ___ T.S. ___

Location (Top, Bottom, Side)	Thickness	Crown Radius	Knuckle Radius	Nominal Depth	Conical Apex Angle	Hemispherical Radius	Flat Diameter	Side to Pressure (Convex or Concave)
(a) Bottom	5/16"	E. & D.	W/144"	2.5	0-35/16"	F.O.B.		Concave
(b)								

If removable, bolts used (Material, Spec. No., T.S., Size, Number) Other fastening (Describe or Attach Sketch)

7. STAYBOLTS: (Material) If hollow (Size of Hole) Attachment (Threaded, Welded) Pitch (Horiz.) X (Vert.) Diam. (Nominal)

8. JACKET CLOSURE: (Describe as spot welded, bar, etc. If bar, give dimensions. If bolted, describe or sketch)

9. Constructed for max. allowable working press. 15 Vac. psi at max. temp. Amb. °F. Min. temp. (when less than -30°) ___ °F. Hydrostatic / Pneumatic or Combination Test Press. N/A psi.

Items 10 and 11 to be completed for tube sections.

10. TUBE SHEETS: Stationary. Material ___ (Name & Spec. No.) Diam. ___ (Subject to Pressure) in. Thickness ___ in. Attachment (Welded, Bolted)

Floating. Material ___ (Name & Spec. No.) Diam. ___ in. Thickness ___ in. Attachment ___

11. TUBES: Material ___ (Name & Spec. No.) O.D. ___ in. Thickness ___ Inches or Gage Number ___ Type (Straight or U)

Items 12–15 incl. to be completed for inner chambers of jacketed vessels, or channels of heat exchangers.

12. SHELL: Material Inner Shell T-304 (Name & Spec. No.) T.S. 75,000# (Fig. or T.S. & Spec. No. T.S.) Nominal Thickness 1/4 in. Corrosion Allowance 0 in. Diam. 9 Ft. 11 in. Length 85 Ft. 4 in.
Code

13. SEAMS: Long. Dbl. Butt (Butt, Dbl., Single, Lap, Butt) H.T. No (Yes or No) R.T. Complete (Spot or Complete) Sectioned No (Yes or No) Efficiency 100 %

Girth Dbl. Butt H.T. No R.T. Complete Sectioned No No. of courses 9

If riveted describe seams fully on reverse side of form.

14. HEADS (a) Material SA-240 T-304 T.S. 75,000# (b) Material ___ T.S. ___ (c) Material ___ T.S. ___

Location (Top, Bottom, Side)	Thickness	Crown Radius	Knuckle Radius	Nominal Depth	Conical Apex Angle	Hemispherical Radius	Flat Diameter	Side to Pressure (Convex or Concave)
(a) [redacted]	[redacted]	[redacted]	[redacted]	[redacted]	[redacted]	[redacted]	[redacted]	Concave
[redacted]	[redacted]	[redacted]	[redacted]	[redacted]	[redacted]	[redacted]	[redacted]	Welded
[redacted]	[redacted]	[redacted]	[redacted]	[redacted]	[redacted]	[redacted]	[redacted]	Welded
[redacted]	[redacted]	[redacted]	[redacted]	[redacted]	[redacted]	[redacted]	[redacted]	[redacted]
[redacted]	[redacted]	[redacted]	[redacted]	[redacted]	[redacted]	SA-240 T-304		Welded
[redacted]								

15. Constructed for max. allowable working press. 60 psi at max. temp. 100 °F. Min. temp. (when less than -30°) -423 °F. [redacted] Test Press. 117 psi.

Items below to be completed for all vessels where applicable.

16. SAFETY VALVE OUTLETS: Number 1 Size 10" Location Top of tank in Jacket

17. NOZZLES

Purpose (Inlet, Outlet, etc.)	Number	Diam. or Size	Type	Material	Thickness	Reinforcement Material	How Attached
	(1)	1/8" 6000# Cplg.			SA-105-II		Welded
	(3)	1/4" 150# Cplgs.			T-304		Welded
	(3)	4" 125# Phenolic	Flat Forged	Flgs.	SA-181-I		Welded
	(1)	2" Sch. 80 Pipe			SA-312 T-304		Welded
	(2)	1-1/2" (1) 2" (1) 2-1/2" (1) 4" 150#		Slip on Flgs.	SA-182 F-304		Welded
	(1)	18" Special Pad Type Flg.			SA-182 F-304		Welded
	(1)	10" Special Safety Flg. (Furnished by Union Carbide)					Welded

[1] If provided heat-treated. [2] List under remarks other internal or external pressures with corresponding temperature when applicable.

FORM U-1 (back)

18. INSPECTION OPENINGS: Manholes, No. _____ Size _____ Location _____
Handholes, No. _____ Size _____ Location _____
Threaded, No. _____ Size _____ Location _____

19. SUPPORTS: Skirt _____ (Yes or No) Lugs _____ (Number) Legs 4 (Number) Other _____ (Describe) Attached Welded to tank (Where & How)

20. REMARKS: 119" I.D. x 95' 3-1/2" O.A. Length 53,134 W.G. Inner Liquid Hydrogen Storage Vessel, Construction ASME Code 1968 Edition Div. 1 and 144" O.D. x 97' 4" O.A. Length Outer Non Code Jacket, per Beaird Dwg. Order 174453

(Brief description of purpose of the vessel, as Air Tank, After Cooler, [illegible], etc. Place condition of each part.)

We certify that the statements made in this report are correct and that all details of design, material, construction, and workmanship of this vessel conform to the ASME Code for Unfired Pressure Vessels.

Date 9-16 19 70 Signed AMF BEAIRD, INC. (Manufacturer) By [signature]

Certificate of Authorization Expires December 31, 1974

CERTIFICATE OF SHOP INSPECTION

VESSEL MADE BY AMF BEAIRD, INC. at SHREVEPORT, LOUISIANA

I, the undersigned, holding a valid commission issued by the National Board of Boiler and Pressure Vessel Inspectors and/or the State or Province N. B. and employed by EMPLOYERS COMMERCIAL UNION INSURANCE CO. of AMERICA have inspected the pressure vessel described in this manufacturer's data report on 9-16 19 70, and state that to the best of my knowledge and belief, the manufacturer has constructed this pressure vessel in accordance with the applicable sections of the ASME Boiler and Pressure Vessel Code.

By signing this certificate neither the inspector nor his employer makes any warranty, expressed or implied, concerning the pressure vessel described in this manufacturer's data report. Furthermore, neither the inspector nor his employer shall be liable in any manner for any personal injury or property damage or a loss of any kind arising from or connected with this inspection.

Date 9-16 19 70

[signature] Commissions [illegible]

[illegible]

CERTIFICATE OF FIELD ASSEMBLY INSPECTION

I, the undersigned, holding a valid commission issued by the National Board of Boiler and Pressure Vessel Inspectors and/or the State or Province _____ and employed by _____ of _____ have compared the statements in this manufacturer's data report with the described pressure vessel and state that parts referred to as data items _____, not included in the certificate of shop inspection have been inspected by me and that to the best of my knowledge and belief the manufacturer has constructed and assembled this pressure vessel in accordance with the applicable sections of the ASME Boiler and Pressure Vessel Code. The described vessel was inspected and subjected to a hydrostatic test of _____ psi.

By signing this certificate neither the inspector nor his employer makes any warranty, expressed or implied, concerning the pressure vessel described in this manufacturer's data report. Furthermore, neither the inspector nor his employer shall be liable in any manner for any personal injury or property damage or a loss of any kind arising from or connected with this inspection.

Date _____ 19 _____

_____ Inspector's Signature Commissions _____ Nat'l Board or State and No.

1. Work done by Hayes Boiler & Mechanical, Inc. Chicago, Illinois (Name and address of repair or alteration organization) 860151 (Serial No.)

2. Owner Fermi National Labs. Batavia, Illinois (Name and address of owner)

3. Location of Installation Fermi National Labs. Batavia, Illinois (Name and address)

4. Unit Identification Pressure Vessel (Boiler, Pressure Vessel) Name of Manufacturer AMF Beaird, Inc.

5. Identifying Nos. 174453 (Mfgr. Serial No.) 85071 (National Board No.) (Jurisdiction) (Other) 1970 (Year Built)

6. Description of Work: Fit-up and welded threenozzles into shell of vessell. The welding was (Use back, separate sheet, or sketch if necessary)

performed by the Gas Tungston Arc Welding process.

Pressure Test, if Applied 97½ psi

7. Remarks: Attached are Manufacturer's Partial Data Reports properly identified and signed by Commissioned Inspectors for the following items of this report:

(Name of part, item number, mfgr's name, and identifying stamp)

CERTIFICATE OF COMPLIANCE

We certify that the statements made in this report are correct and that all (design) material, construction, and workmanship on this alteration (repair, alteration) conform to The National Board Inspection Code.

Date 4/9/86 Signed Hayes Boiler & Mechanical, Inc. (Repair, Alteration Organization) by [signature] (Authorized Representative)

Our Certificate of Authorization No. 35 to use the "R" Symbol expires 6/20 1988

CERTIFICATE OF INSPECTION

I, the undersigned, holding a valid commission issued by The National Board of Boiler and Pressure Vessel Inspectors or the State or Province of ILLINOIS and employed by H. S. B. I. & I. Co. of HARTFORD CONNECTICUT have inspected the work described in this Data Report on APRIL 9, 1986 and state that to the best of my knowledge and belief, this work has been done in accordance with The National Board Inspection Code.

By signing this certificate, neither the Inspector nor his employer makes any warranty, expressed or implied, concerning the work described in this Report. Furthermore, neither the Inspector nor his employer shall be liable in any manner for any personal injury or property damage or a loss of any kind arising from or connected with this inspection, except such liability as may be provided in a policy of insurance which the Inspector's insurance company may issue upon said object and then only in accordance with the terms of said policy.

Date 4/9/86 [signature] SR. Inspector Commissions IL. 1302 Nat'l Board, State, Province and No.

This form may be obtained from the National Board of Boiler and Pressure Vessel Inspectors, 1055 Crupper Ave., Col's., O. 43229. NB 66 Rev 0