SDC SOLENOID DESIGN NOTE #199 (EAR # 83)

TITLE: Stress and Buckling Analysis of the SDC Solenoid Prototype Vacuum Vessel

AUTHOR: Ang Lee and Ron Fast

DATE: May 10, 1993

Introduction: This SDC design note presents the results of an anslysis of the SDC solenoid vacuum shell covering general instability and static stresses resulting from external pressure, "G" load and chimney loading. Chapter 1 presents the results for the SDC prototype vacuum vessel with an external pressure of 15 psi (1 atm) and 3 g load for three different positions: 1) horizontal position supported by a cradle on each end; 2)vertical +z position; 3) vertical -z position with bulkhead sitting on the floor. Chapter 2 is a section where the chimney pipe as well as its vicinity around the intersection is analyzed. Chapter 3 describes results of the stress analysis for the panel to panel joint. All material properties and the data used in the calculation are attached as an Appendix.

Chapter 1 Stress and bulking analysis for the SDC Solenoid Prototype Vacuum vessel with an external pressure 15 psi and 3 g load case

1.1 Vacuum Vessel Geometry, Boundary Condition and Stress Calculation

The basic geometry for the vacuum shell is presented in Table 1-1

Table 1-1 **Basic Vacuum Shell Geometry**

Outer Shell Diameter	162.2 in	(4120 mm)
Outer Shell Length	92.126 in	(2340 mm)
Inner Shell Diameter	133.9 in	(3400 mm)
Inner Shell Length	92.126 in	(2340 mm)
Inner Shell Thickness	0.25 in	(6.3 mm)
Bulkhead outer Radius	81.102 in	(2060 mm)
Bulkhead thickness	1.22 in	(31 mm)

The material is considered to be aluminum for the vessel with a allowable stress based on the ASME code(Appendix A). The current isogrid design geometry is given in Table 1-2 , a dimensionless parameters in Table 1-3 and its section parameters in Table 1-4.

Table 1-2 Isogrid Geometry

Node Spacing	a	7.0910 in	(180.1 mm)
Web Width	b	0.1500 in	(3.81 mm)
Flange Depth	c	0.3100 in	(7.87 mm)
Web Depth	d	1.7300 in	(43.94 mm)
Triangle Height	h	6.1419 in	(156.0 mm)
Flange Width	w	1.0000 in	(25.4 mm)
Skin Thickness	t	0.1600 in	(4.06 mm)

Table 1-3 Isogrid Dimensionless Parameters

α	=	bd/ht	0.2641
β	=		27.8275
δ	=	d/t	10.8125
τ	=	c/t	1.9375
μ	=	wc/ht	0.3155

Table 1-4 Isogrid Section Parameters

Effective Area	A	0.2527 in^2/in	(6.4186 mm^2/mm)
Flange Fiber Distance	Cf	1.5695 in	(39.8653 mm)
Skin Fiber Distance	Cs	0.7383 in	(18.7528 mm)
Shell Modulus	E*	9.235×10^5 psi	(6367 MPa)
Bending Rigidity	D	2.92816×10^6 in-lb	(0.3308×10^6 m-N)
Moment of Inertia	I	0.4175 in^4/in	(6842.60 mm^4/mm)
Extension Stiffness	K	2.39×10^6 lb/in	(4.1855×10^6 N/m)
Effective Thickness	t_{eff}	0.2527 in	(6.4186 mm)
Shell Thickness	t*	2.8180 in	(71.5772 mm)

Table 1-5 Force on Bulkheads from Cold Mass during shipping from Toshiba to KEK

A. With Axis Horizontal, Force on Each Bulkhead

Point of application			Direction*	Force at Point of Application (3 x actual weight)	
r		ø		lbf	kgf
in	mm	degrees*			
74.055	1881	82.25	-y (90°)	9900	4500
74.055	1881	277.75	-y (90°)	9900	4500

B. With Axis Vertical, Force on Chimney End Bulkhead Only

Point of application			Direction**	Force at Point of Application (3 x actual weight)	
r		ø		lbf	kgf
in	mm	degrees*			
75.827	1926	10.0	±z	2829	1286
75.827	1926	35.0	±z	2829	1286
75.827	1926	62.5	±z	2829	1286
75.827	1926	90.0	±z	2829	1286
75.827	1926	117.5	±z	2829	1286
75.827	1926	145.0	±z	2829	1286
75.827	1926	170.0	±z	2829	1286
75.827	1926	190.0	±z	2829	1286
75.827	1926	215.0	±z	2829	1286
75.827	1926	242.5	±z	2829	1286
75.827	1926	270.0	±z	2829	1286
75.827	1926	297.5	±z	2829	1286
75.827	1926	325.0	±z	2829	1286
75.827	1926	350.0	±z	2829	1286

* Zero degrees is indicated in drawing SSC-SDD-000382.
** +z direction is outward from the chimney-end bulkhead

There are three static forces to be considered when analyzing the vacuum vessel. The primary force is a vacuum load of 15 psi (1 atm), which is an external pressure on the outer shell, and internal pressure on the inner shell, and an axial pressure toward the symmetry plane on the bulkheads. The second force is the mass (weight) of the vessel and the inner shell support fixture. A third force is the cold mass of the supperconducting coil inside the annular vacuum space. During the leak testing , it is likely that the vessel axis will be horizontal with a cradle on each end. For shipping, the axis will be vertical in one of two positions, +z or -z. All these configurations are shown in Fig. 1-1. We have assumed a 3 g shipping load in the vertical and axial direction for the purpose of analysis. Table 1-5 shows the force applied to the bulkhead for three different positions besides the external pressure of 15 psi (1 atm).

A 3-D shell element is used to the model vacuum shell and a parametric solid element for supporting cradle as shown in Fig 1-2. Only 1/4 of the structure is needed to be modeled because of symmetry.

The calculation is summarized in Table 1-6. It shows that all the stresses under three different boundary conditions are well below the allowable stress .

Table 1-6 Summary of Result

Position	Isogrid shell skin (psi)	Isogrid shell rib (psi)	Inner shell (max) (psi)	Bulkhead (max) (psi)	Structure defection (max) (in)
Horizontal (MPa)	4800 (33.10)	4700 (32.41)	4500 (31.03)	2683 (18.50)	<0.066 (1.7mm)
Vertical (+z) (MPa)	4789 (33.02)	4730 (32.62)	4284 (29.54)	3882 (26.77)	<0.037 (1.0mm)
Vertical(-z) (Mpa)	4828 (33.29)	4790 (33.03)	4284 (29.54)	2782 (19.18)	<0.037 (1.0mm)

In order to verify the some FEA work, a simple model is used to estimate the stress in the inner shell and outer shell. For the inner shell, the hoop stress Sx is

$$Sx = p\,R/t = 15 \times 67''/0.25'' = 4020 \text{ psi } (27.72 \text{ MPa})$$

For the outer shell, the hoop stress Sx is

$$Sx = p\,R/t_{eff} = 15 \times 81.1''/0.2527'' = 4812 \text{ psi } (33.18 \text{ MPa})$$

Those results are consistent with FEA result.

1.2 Buckling Calculation

a) Bulking analysis via CGA Standard

CGA-341[4] requires that vacuum vessels be designed for a minimum collapse pressure of 30 psi . The critical collapse pressure is to be determined by the following equation

$$Pc = 2.6\,E\,(t/D)^{2.5}/\{(L/D) - 0.45(t/d)^{0.5}\}$$

Using E* and t* [1], equivalent monocoque thickness and Young's modulus, with the material properties and geometry given in Table 1-1 through 1-5, the critical pressure is found to be

$$Pc = 2.6 \times 9.235E5 \times (2.818/162.2)^{2.5}/\{(92.126/162.2) - 0.45 \times (2.818/162.2)^{0.5}\}$$
$$= 187.8 \text{ psi } (1.2948 \text{ MPa})$$

If a correlation coefficient with a value of 0.75 is applied, the corrected critical pressure Pc

$$Pc = 187.8 \times 0.75 = 140 \text{ psi } (0.9627 \text{ MPa}) > 30 \text{ psi } (2 \text{ atm})$$

Since isogrid pattern for the prototype is that designed for the full size vacuum shell with a length about four times longer than the prototype shell, the critical pressure of the prototype should be about four times higher than 30 psi (2 atm).

b) Buckling Analysis via NASA SP-8007

NASA SP-8007 [1] gives a equation to calculate the critical pressure for cylindrical shells under external pressure as

$$Pc=0.934\ E\ 0.75(t/R)^{2.5}/(L/R)$$

By using same geomety as section 3.2 (a), the critical pressure Pc

$$Pc=0.934x9.235E5X0.75x(2.818/81.1)^{2.5}/(92.126/81.1)$$
$$=128\ psi(0.8825\ MPa) > 30\ psi\ (2atm)$$

The CGA code and NASA SP8007 give an essentially same result for critical pressure.

1.3 Discussion of Result

Calculation shows that all the stresses under the three different positions are well below the allowable stresses. The primary load for the shell is from the vacuum load of 15 psi (1 atm). The 3 g load plays no significant role in term of the overall stress. The buckling calculations show that the critical pressure of prototype vacuum shell is well above the 30 psi (2 atm). The structure is considered to be safe under the such circumstance.

1.4 List of Figure Attached to the Chapter 1

Figure 1-1 Operating and shipping orientations of vessel and magnet (a) horizontal, (b) +z vertical, (c)-z vertical

Figure 1-2 SDC solenoid prototype vacuum vessel for the case of the horizontal position.

Figure 1-3 Deflection of SDC solenoid vacuum vessel for the case of the horizontal position.

Figure 1-4 Stress plot for the inner shell for the case of the horizontal position.

Figure 1-5 Stress plot for bulkhead for the case of the horizontal position.
Figure 1-6 Isogrid shell skin stress for the case of the horizontal position.
Figure 1-7 Isogrid shell rib stress for the case of the horizontal position.
Figure 1-8 SDC solenoid prototype vacuum vessel for the case of the +Z position.
Figure 1-9 Deflection of SDC solenoid vacuum vessel for the case of the +Z position (without showing outer shell).
Figure 1-10 Stress plot for the inner shell for the case of the +Z position.
Figure 1-11 Stress plot for other-end bulkhead for the case of the+ Z position.
Figure 1-12 Stress plot for chimney-end bulkhead for the case of the+ Z position.
Figure 1-13 Isogrid shell skin stress for the case of the +Z position.
Figure 1-14 Isogrid shell rib stress for the case of the +Z position.
Figure 1-15 Deflection of SDC solenoid vacuum vessel for the case of the -Z position (without showing outer shell).
Figure 1-16 Stress plot for the inner shell for the case of the -Z position.
Figure 1-17 Stress plot for chimney-end bulkhead for the case of the -Z position.
Figure 1-18 Stress plot for other-end bulkhead for the case of the - Z position.
Figure 1-19 Isogrid shell skin stress for the case of the -Z position.
Figure 1-20 Isogrid shell rib stress for the case of the - Z position.

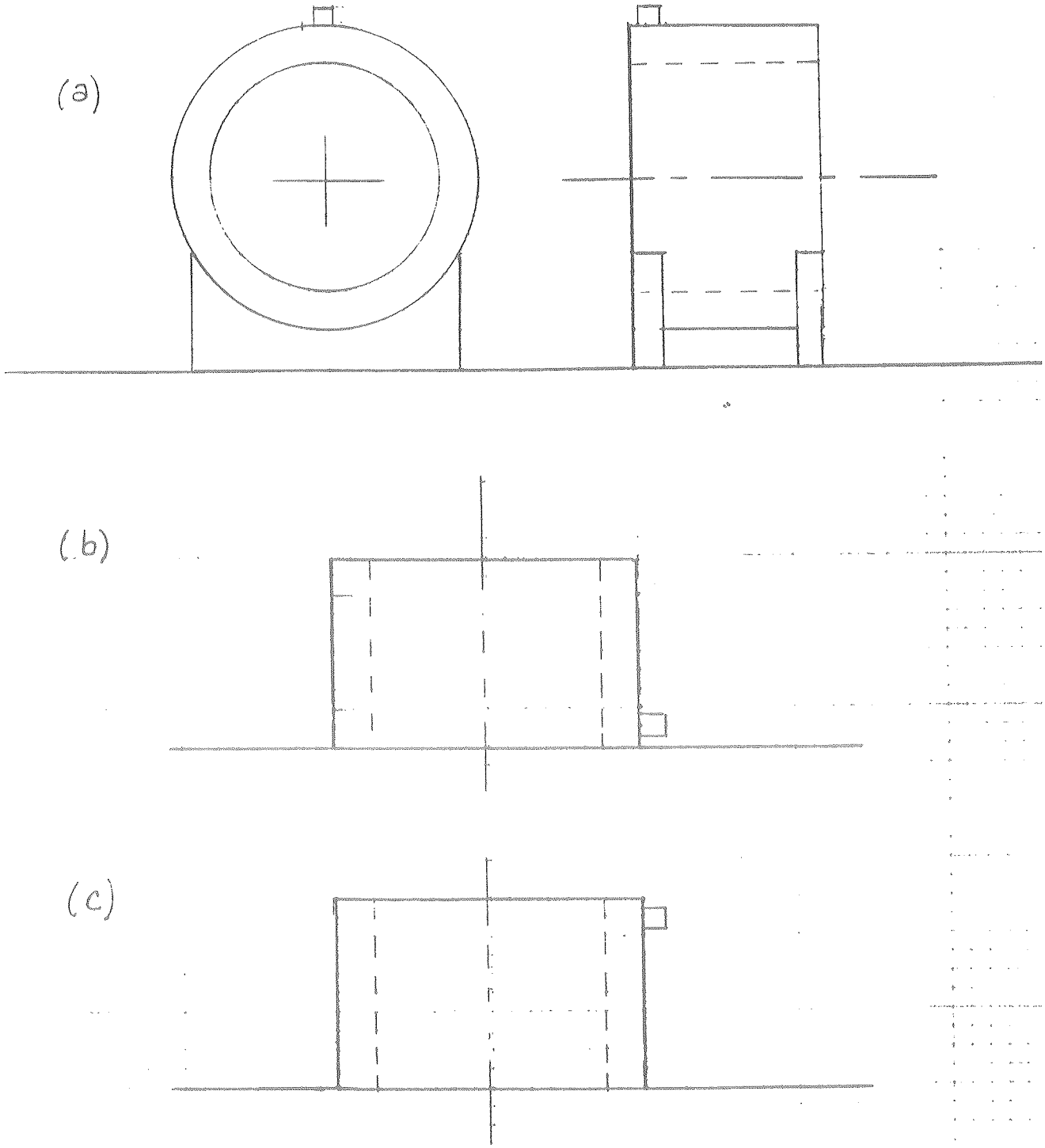

Figure 1-1 Operating and shipping orientations of vessel and magnet

(a) horizontal, (b) +z vertical, (c)-z vertical

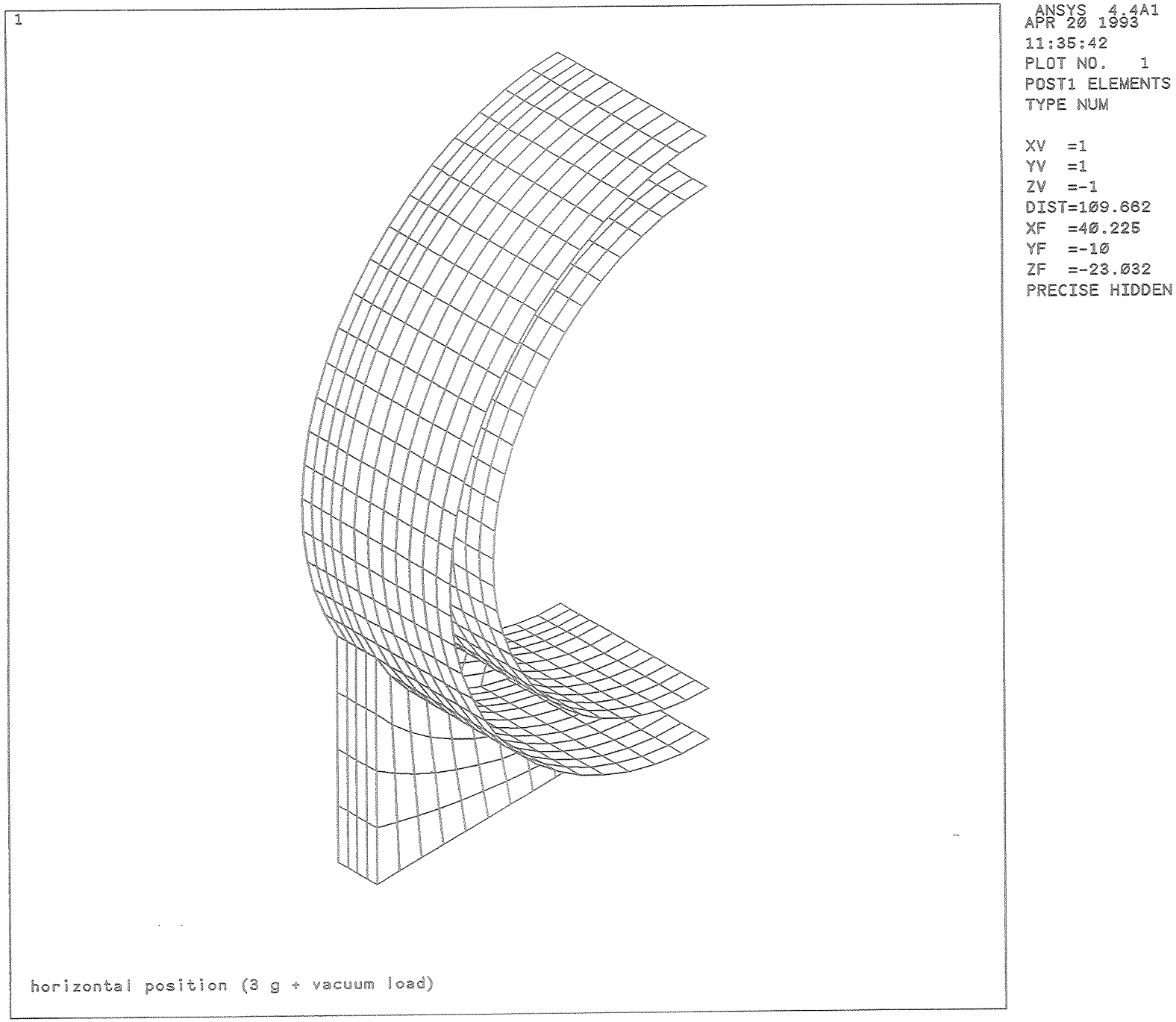

Figure 1-2 SDC solenoid prototype vacuum vessel for the case of the horizontal position.

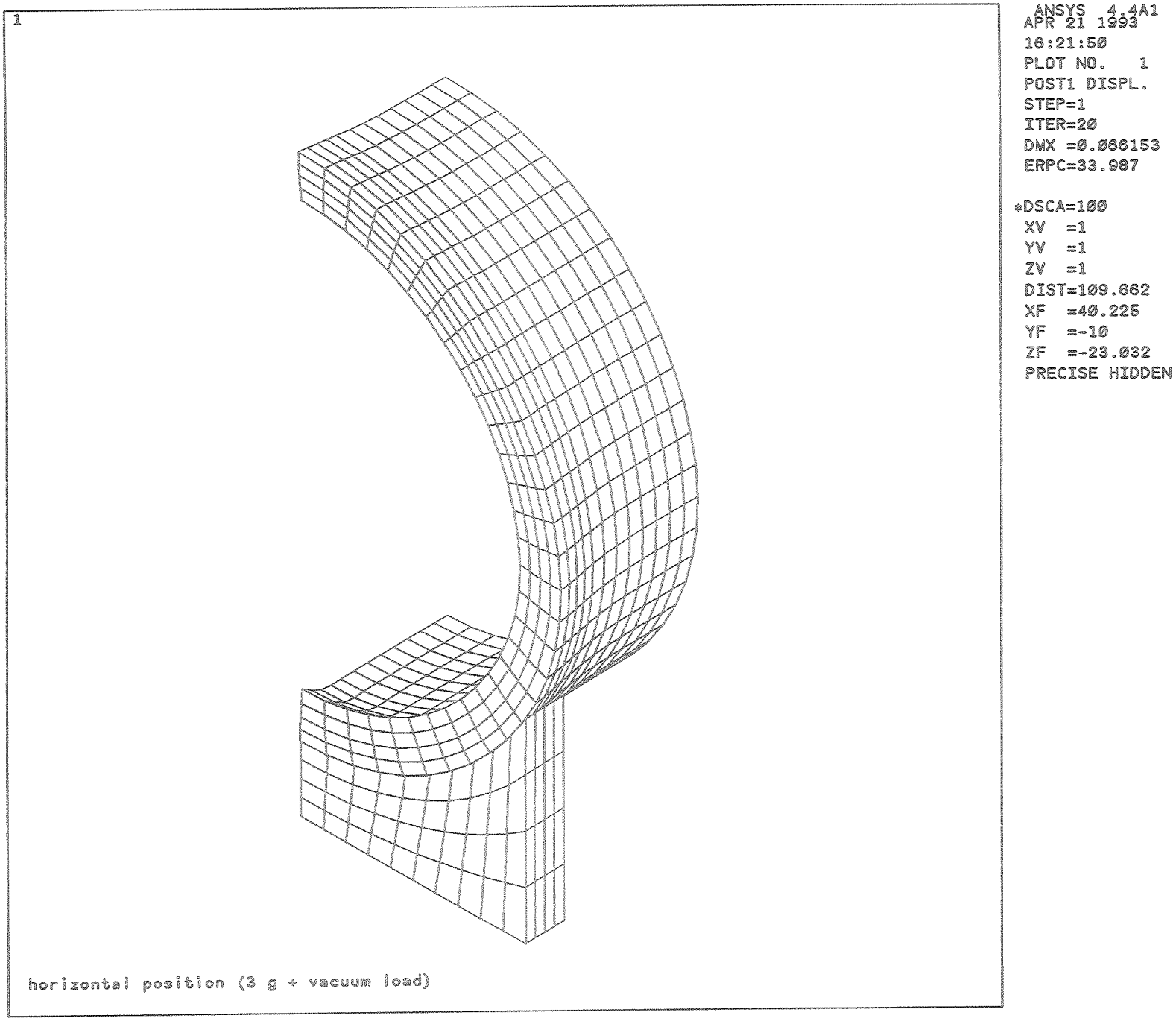

Figure 1-3 Deflection of SDC solenoid vacuum vessel for the case of the horizontal position.

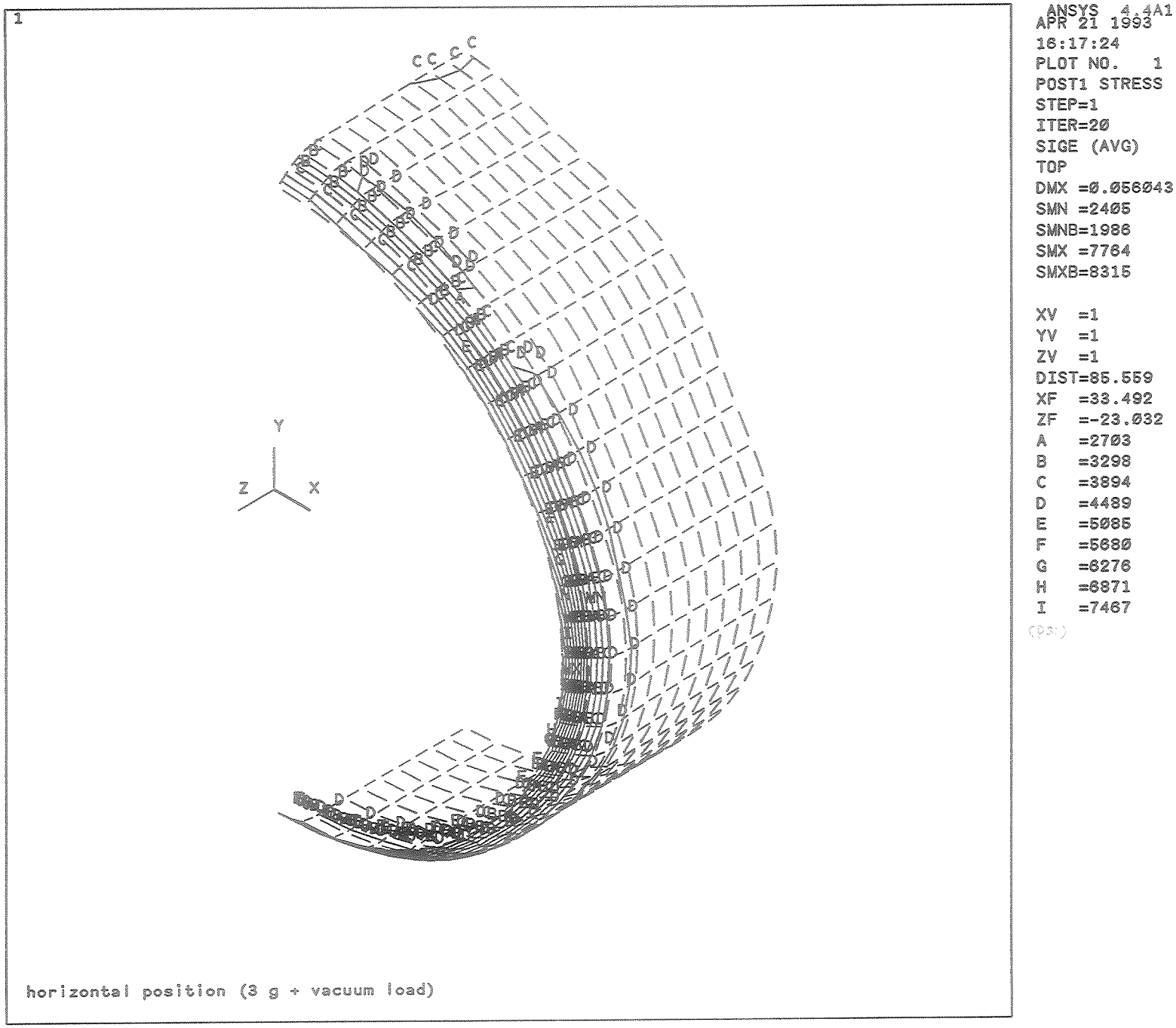

Figure 1-4 Stress plot for the inner shell for the case of the horizontal position.

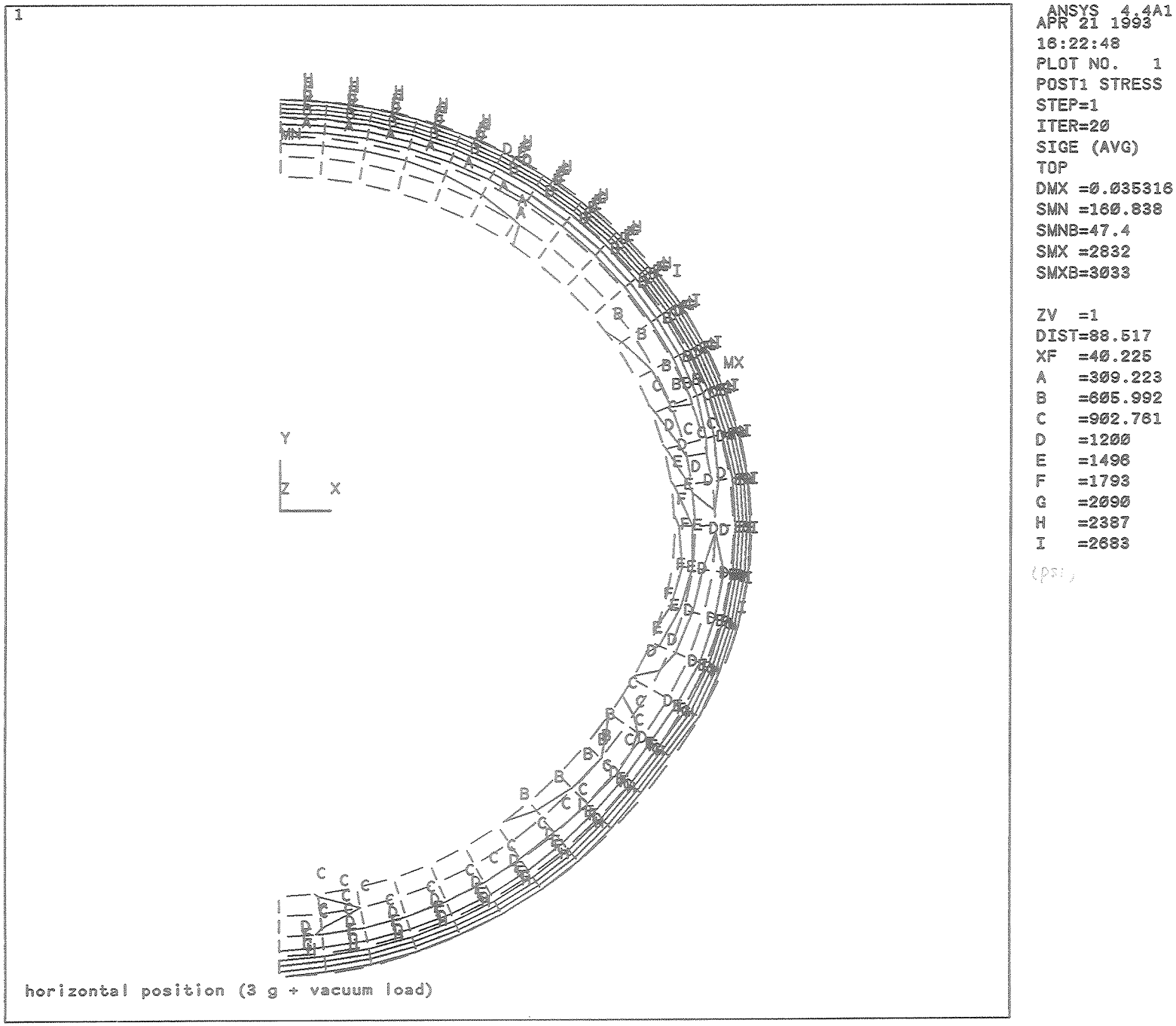

Figure 1-5 Stress plot for bulkhead for the case of the horizontal position.

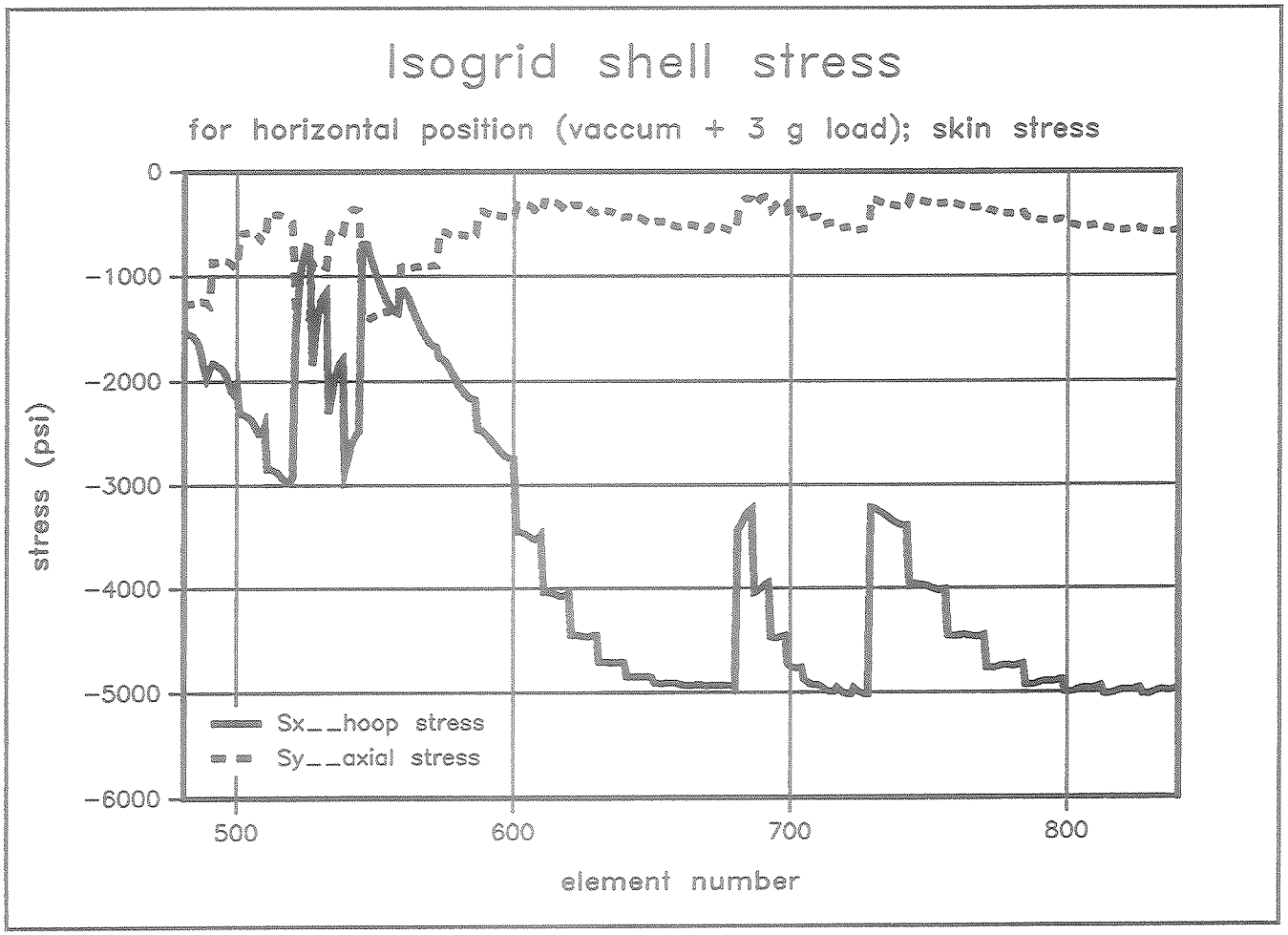

Figure 1-6 Isogrid shell skin stress for the case of the horizontal position.

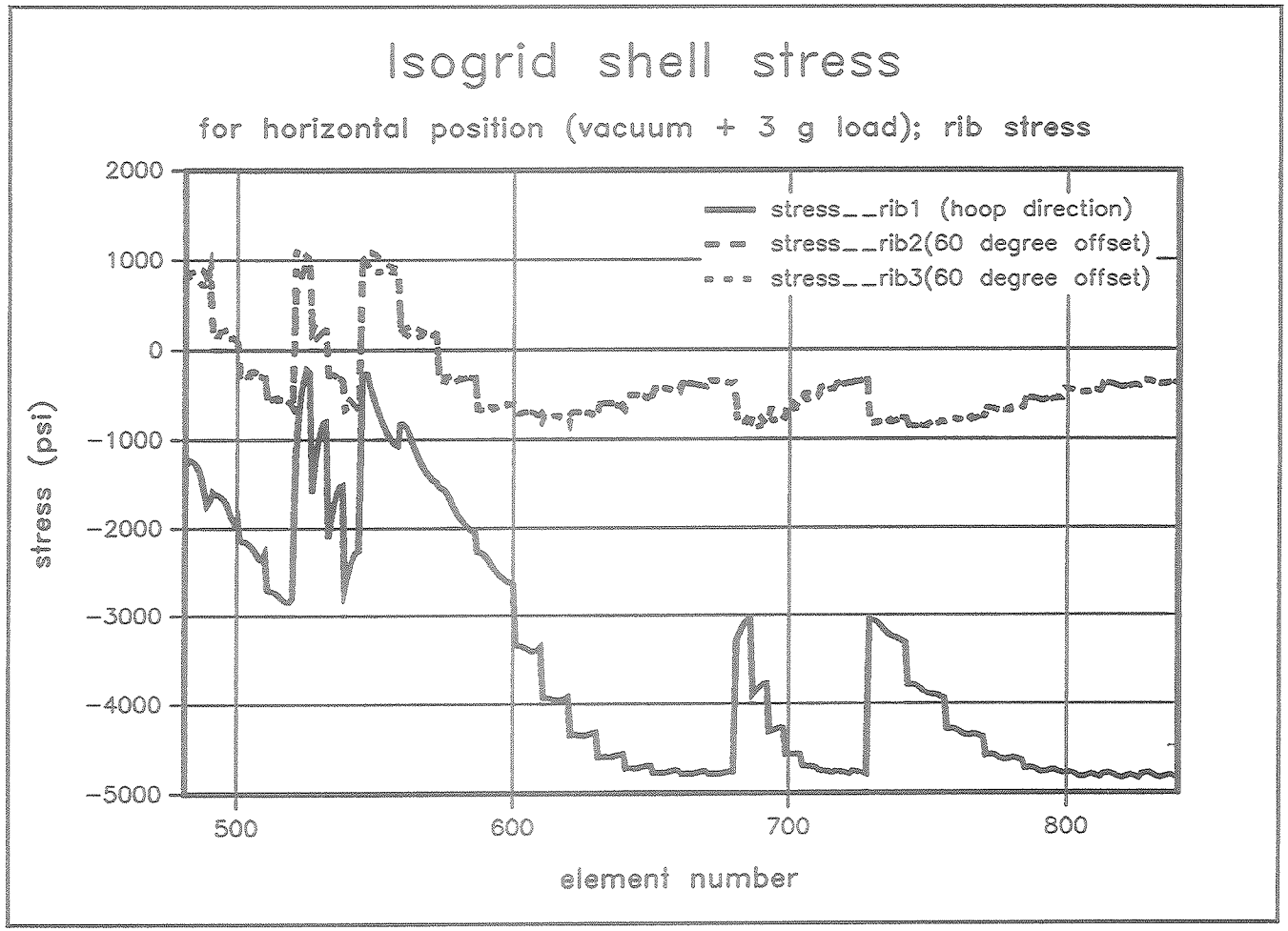

Figure 1-7 Isogrid shell rib stress for the case of the horizontal position.

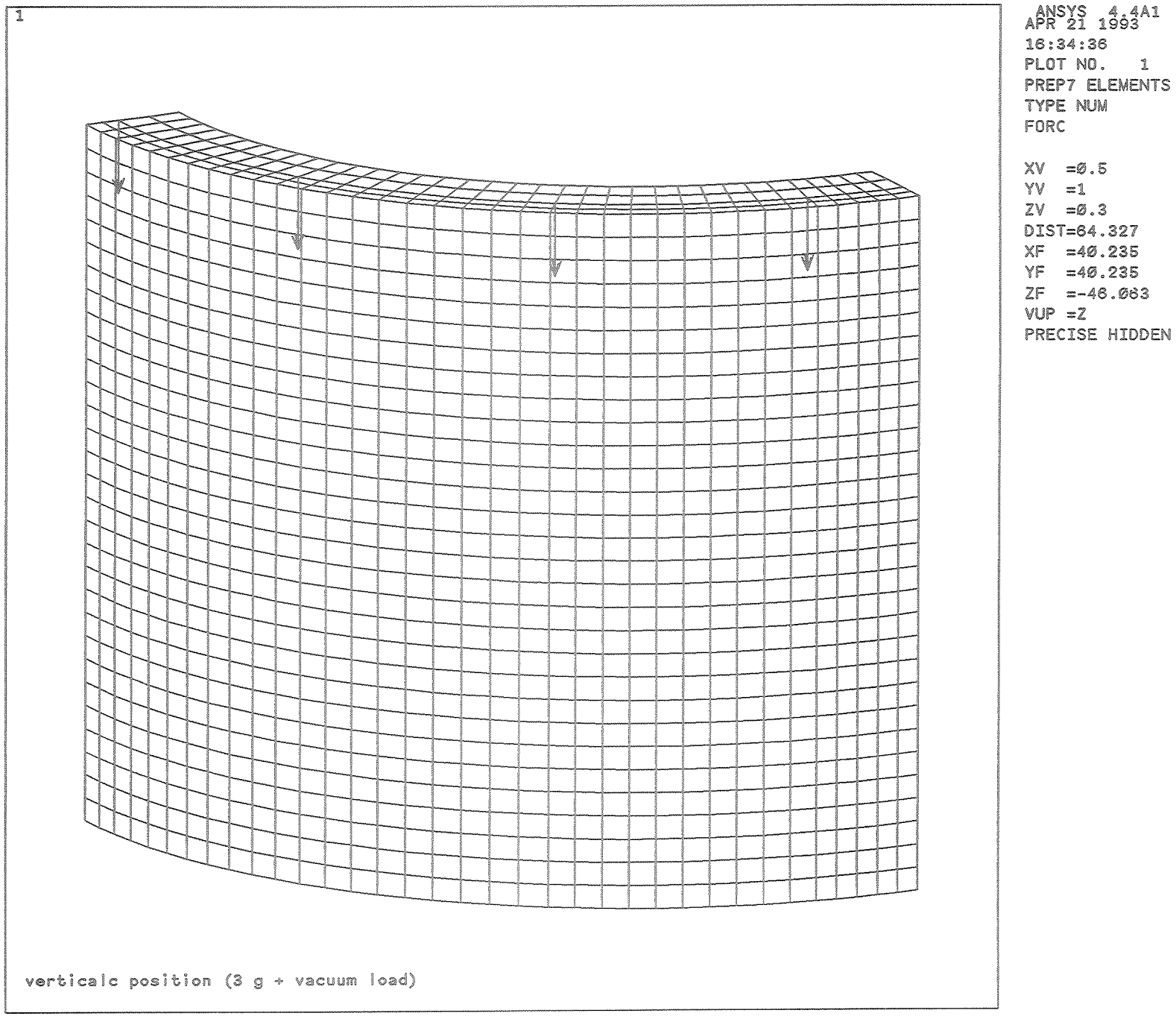

Figure 1-8 SDC solenoid prototype vacuum vessel for the case of the +Z position.

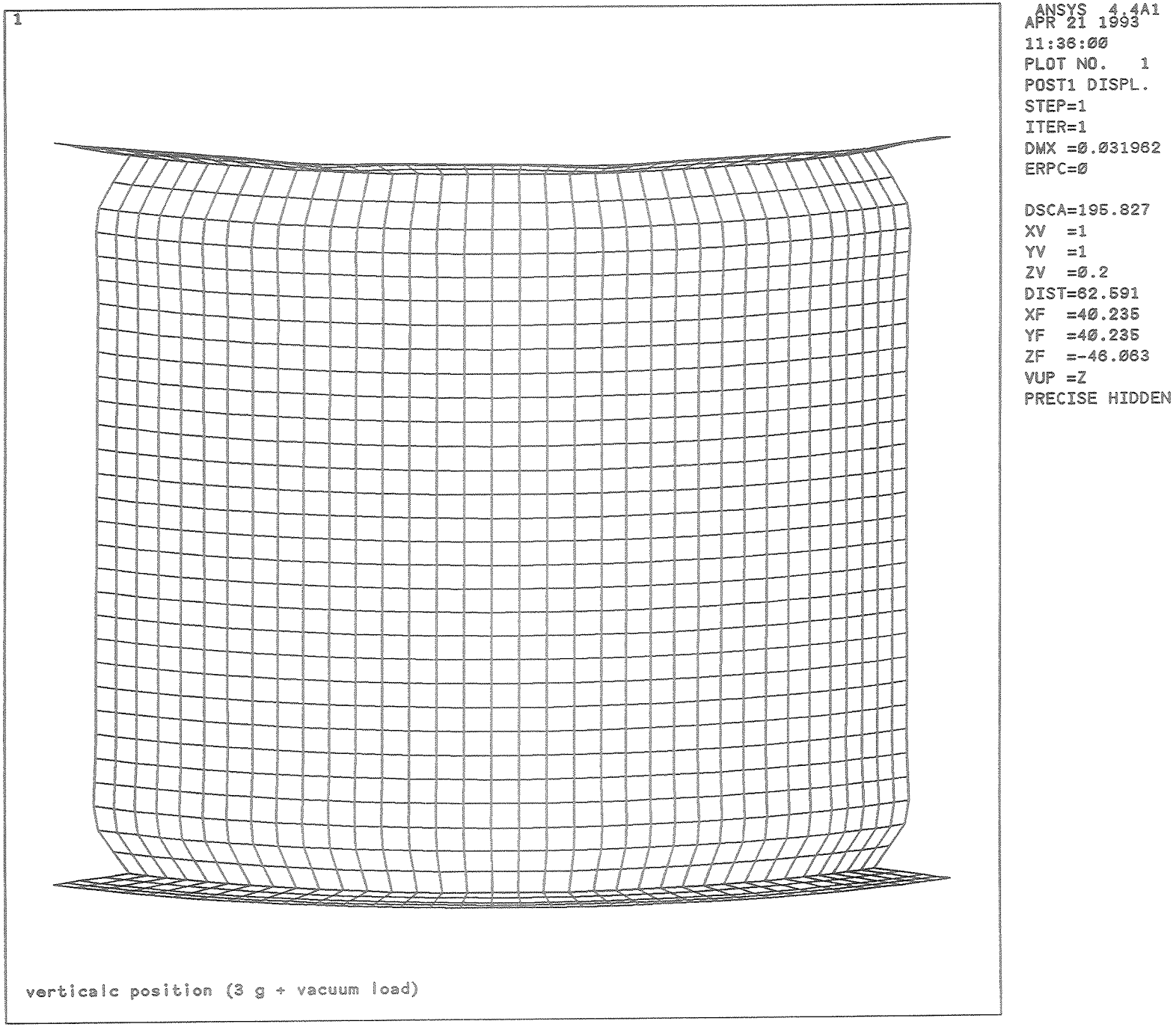

Figure 1-9 Deflection of SDC solenoid vacuum vessel for the case of the +Z position (without showing outer shell).

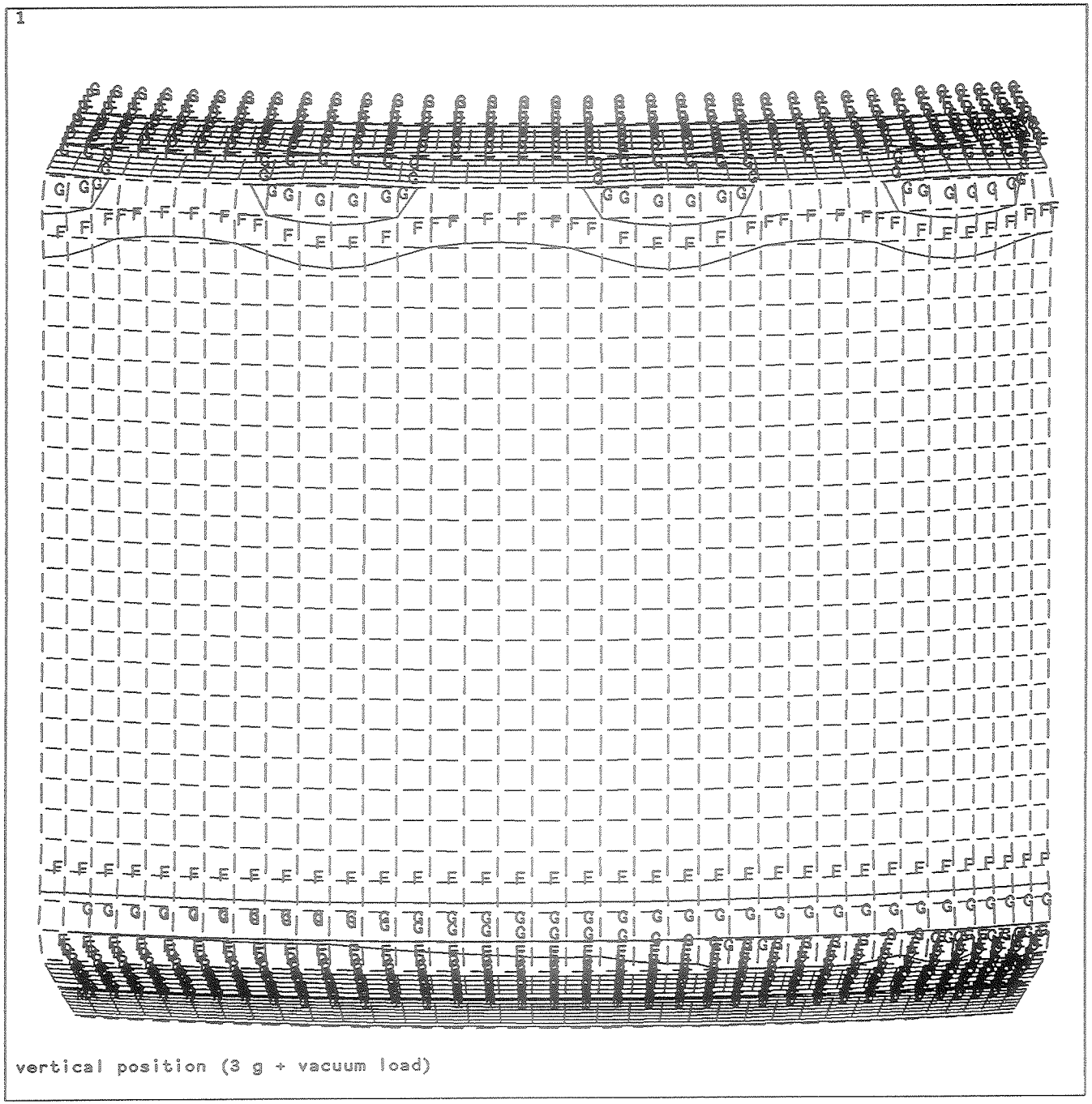

ANSYS 4.4A1
APR 21 1993
12:02:19
PLOT NO. 1
POST1 STRESS
STEP=1
ITER=1
SIGE (AVG)
TOP
DMX =0.031962
SMN =2312
SMNB=1797
SMX =5538
SMXB=6030

XV =1
YV =1
ZV =0.1
DIST=54.219
XF =33.5
YF =33.5
ZF =-46.063
VUP =Z
PRECISE HIDDEN
A =2492
B =2850
C =3208
D =3567
E =3925
F =4284
G =4642
H =5001
I =5359

Figure 1-10 Stress plot for the inner shell for the case of the +Z position.

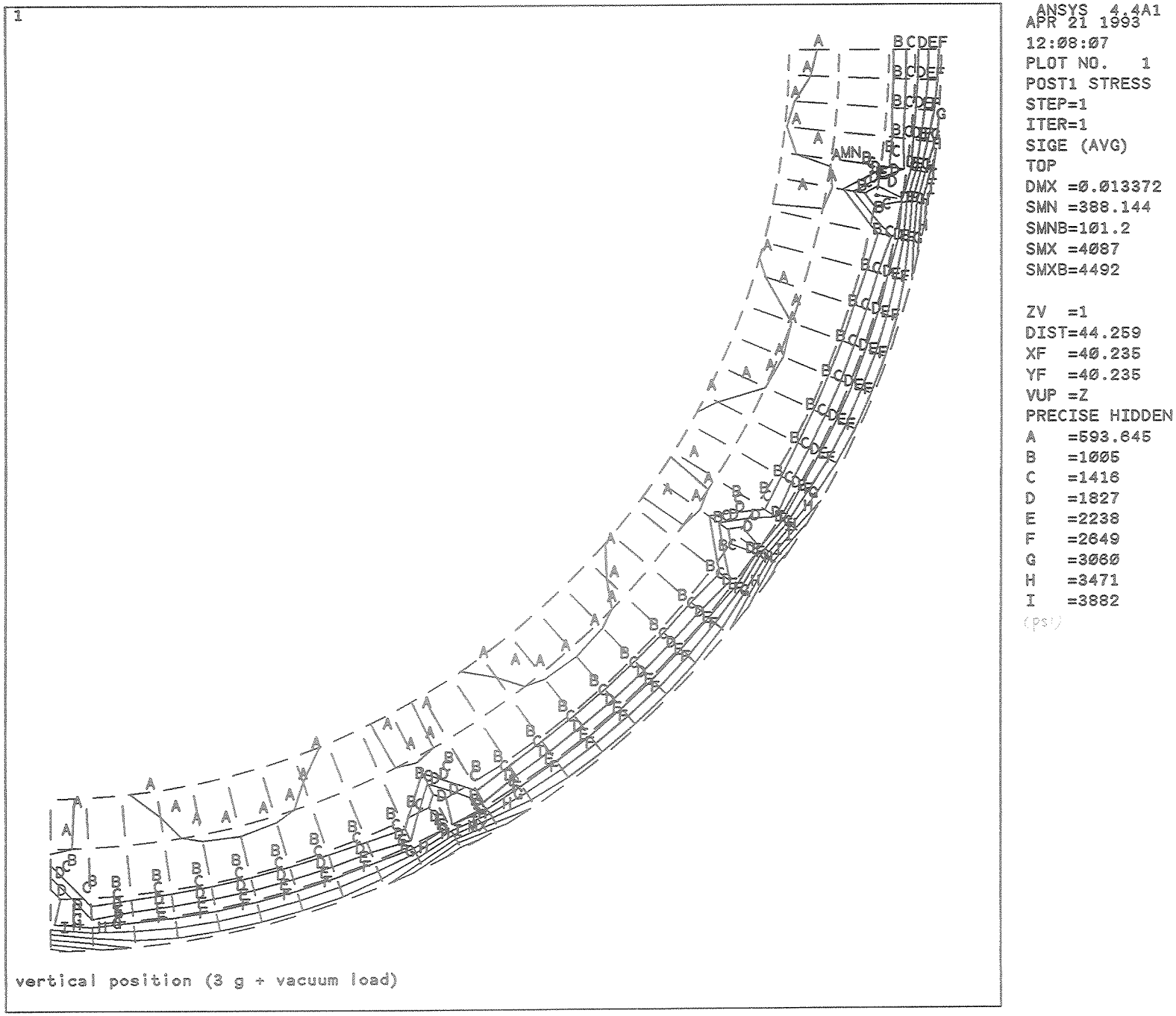

Figure 1-11 Stress plot for other-end bulkhead for the case of the+ Z position.

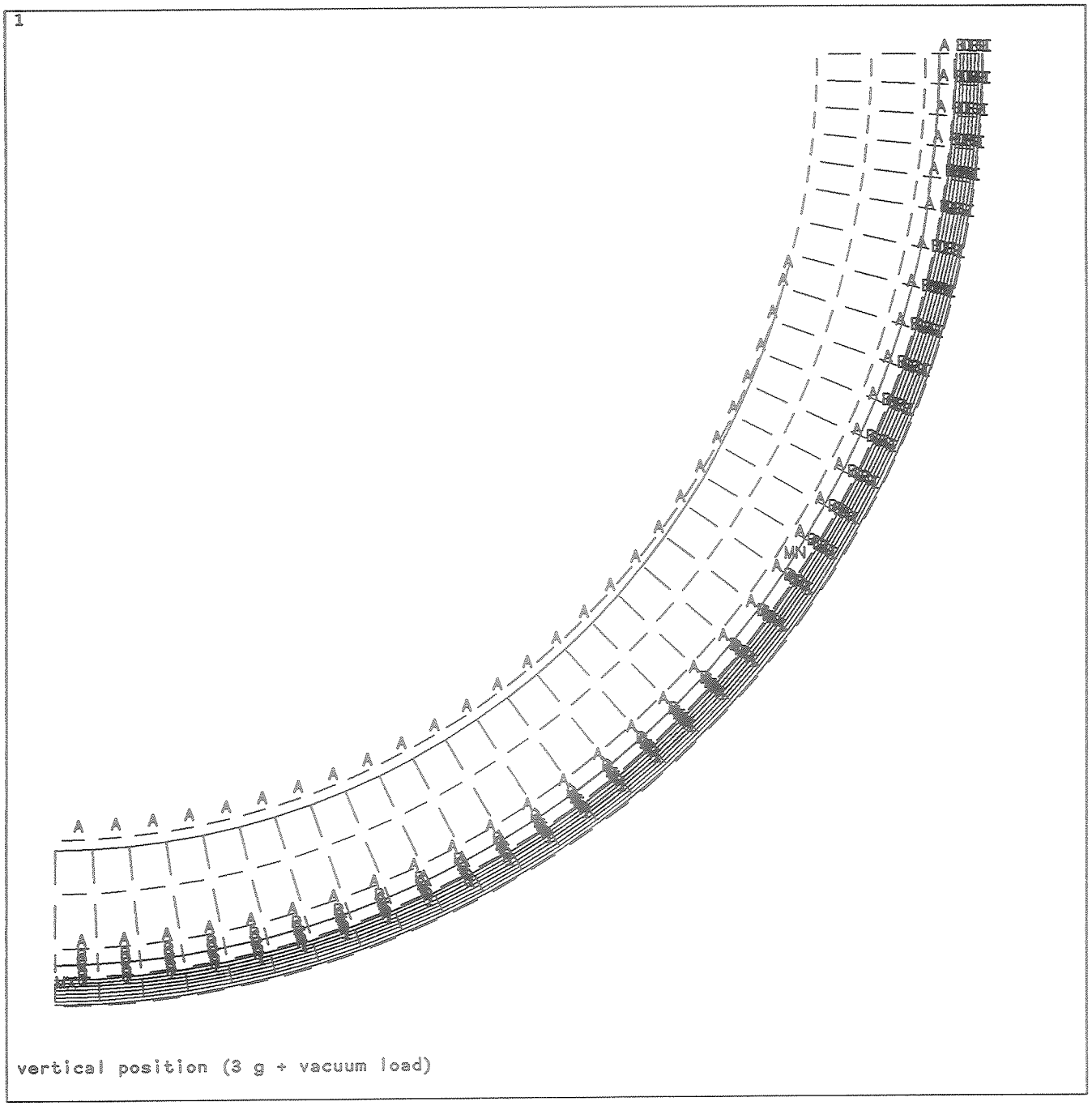

ANSYS 4.4A1
APR 21 1993
12:10:07
PLOT NO. 1
POST1 STRESS
STEP=1
ITER=1
SIGE (AVG)
TOP
DMX =0.003637
SMN =438.517
SMNB=350.396
SMX =2630
SMXB=2845

ZV =1
DIST=44.259
XF =40.235
YF =40.235
ZF =-92.126
VUP =Z
PRECISE HIDDEN
A =560.282
B =803.811
C =1047
D =1291
E =1534
F =1778
G =2021
H =2265
I =2509
(psi)

Figure 1-12 Stress plot for chimney-end bulkhead for the case of the+ Z position.

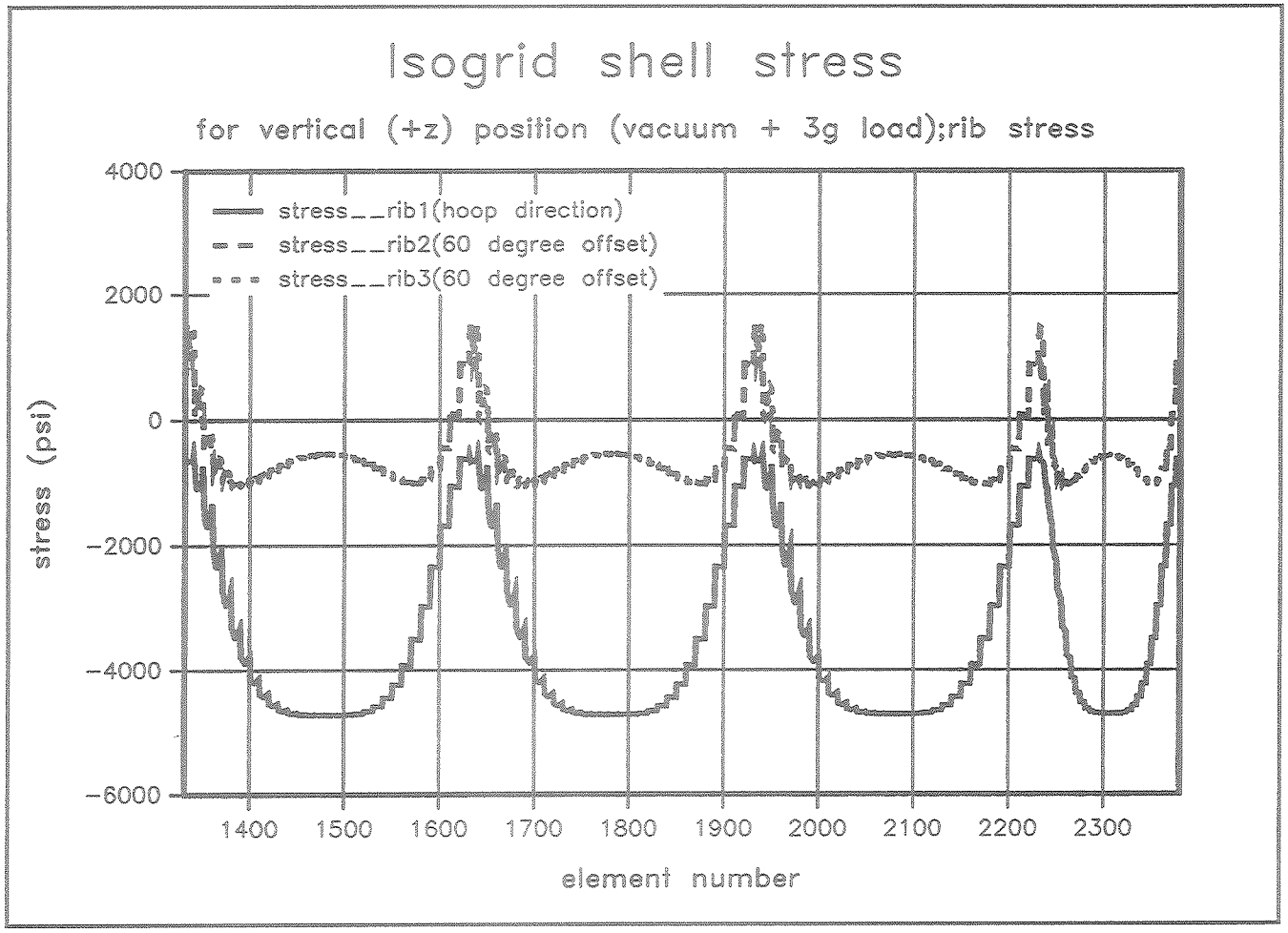

Figure 1-13 Isogrid shell skin stress for the case of the +Z position.

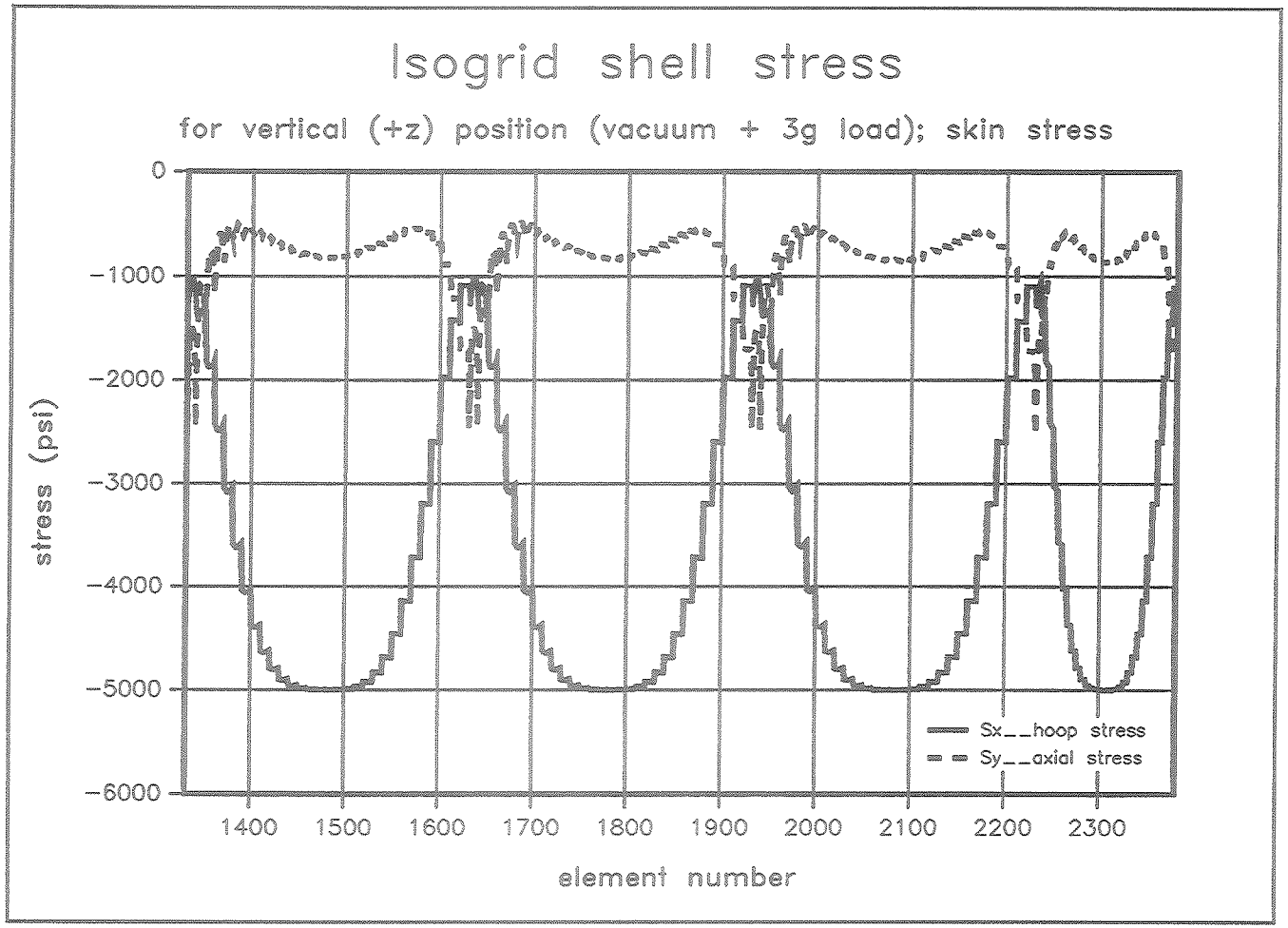

Figure 1-14 Isogrid shell rib stress for the case of the +Z position.

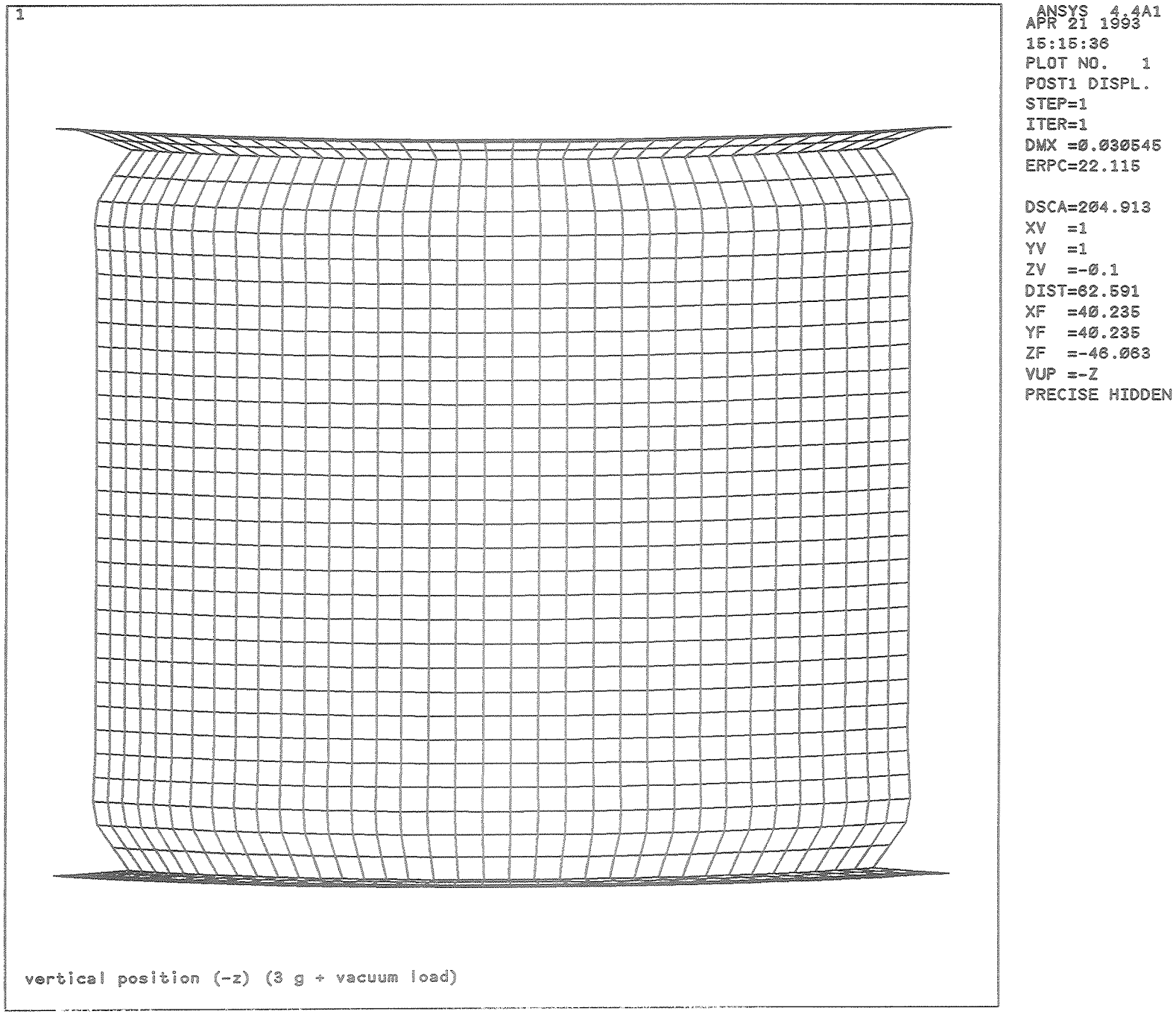

Figure 1-15 Deflection of SDC solenoid vacuum vessel for the case of the -Z position (without showing outer shell).

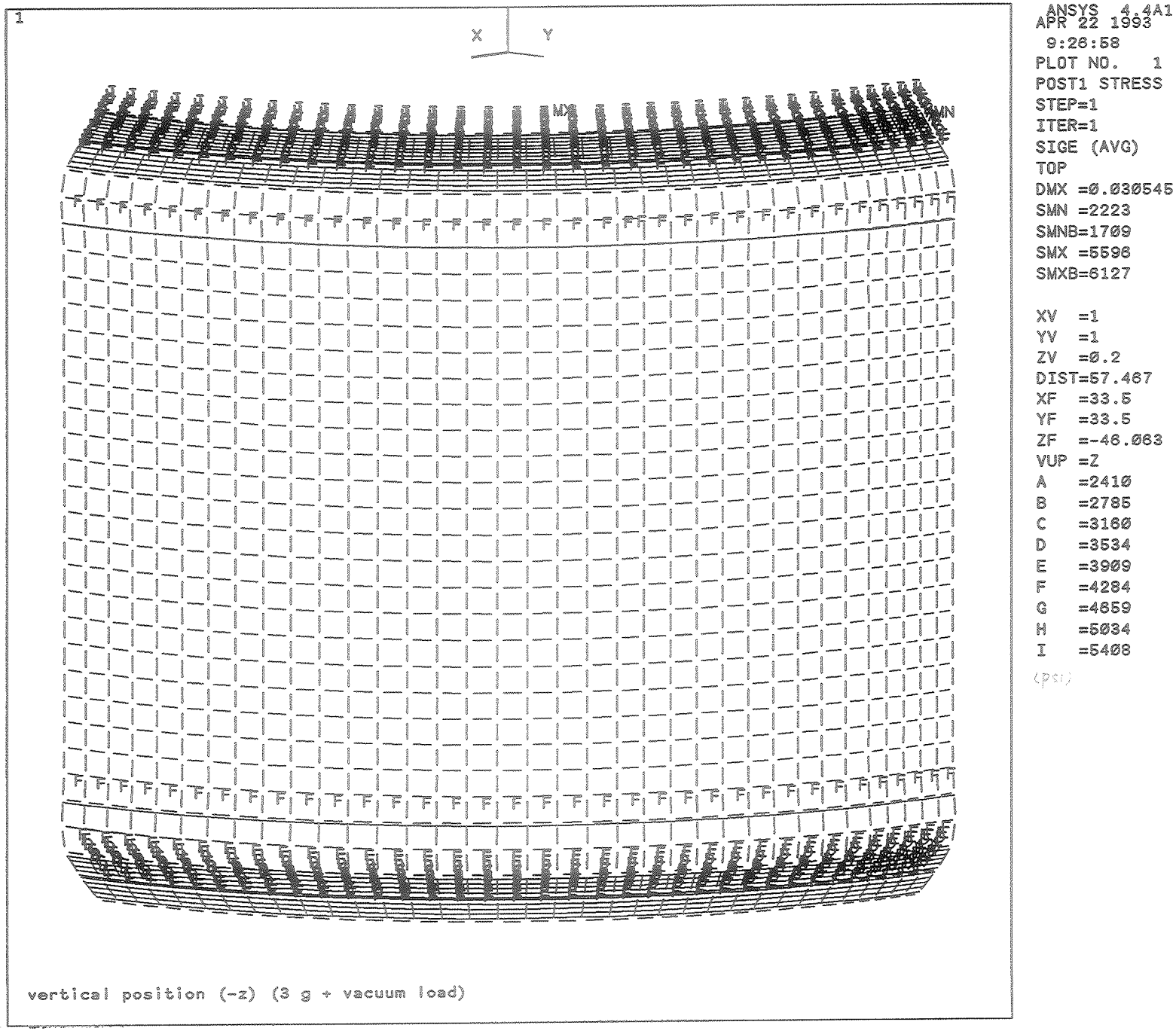

Figure 1-16 Stress plot for the inner shell for the case of the -Z position.

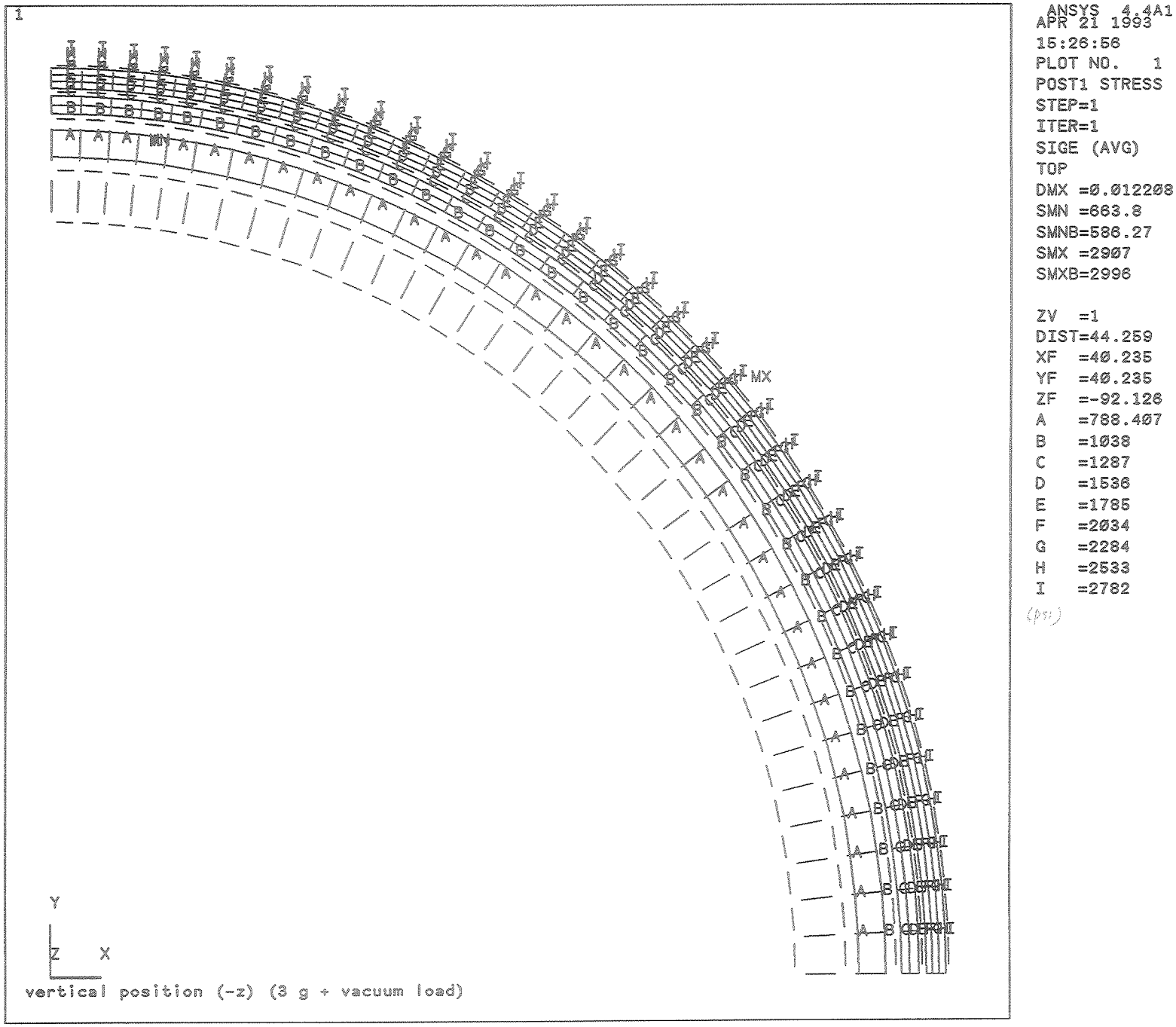

Figure 1-17 Stress plot for chimney-end bulkhead for the case of the -Z position.

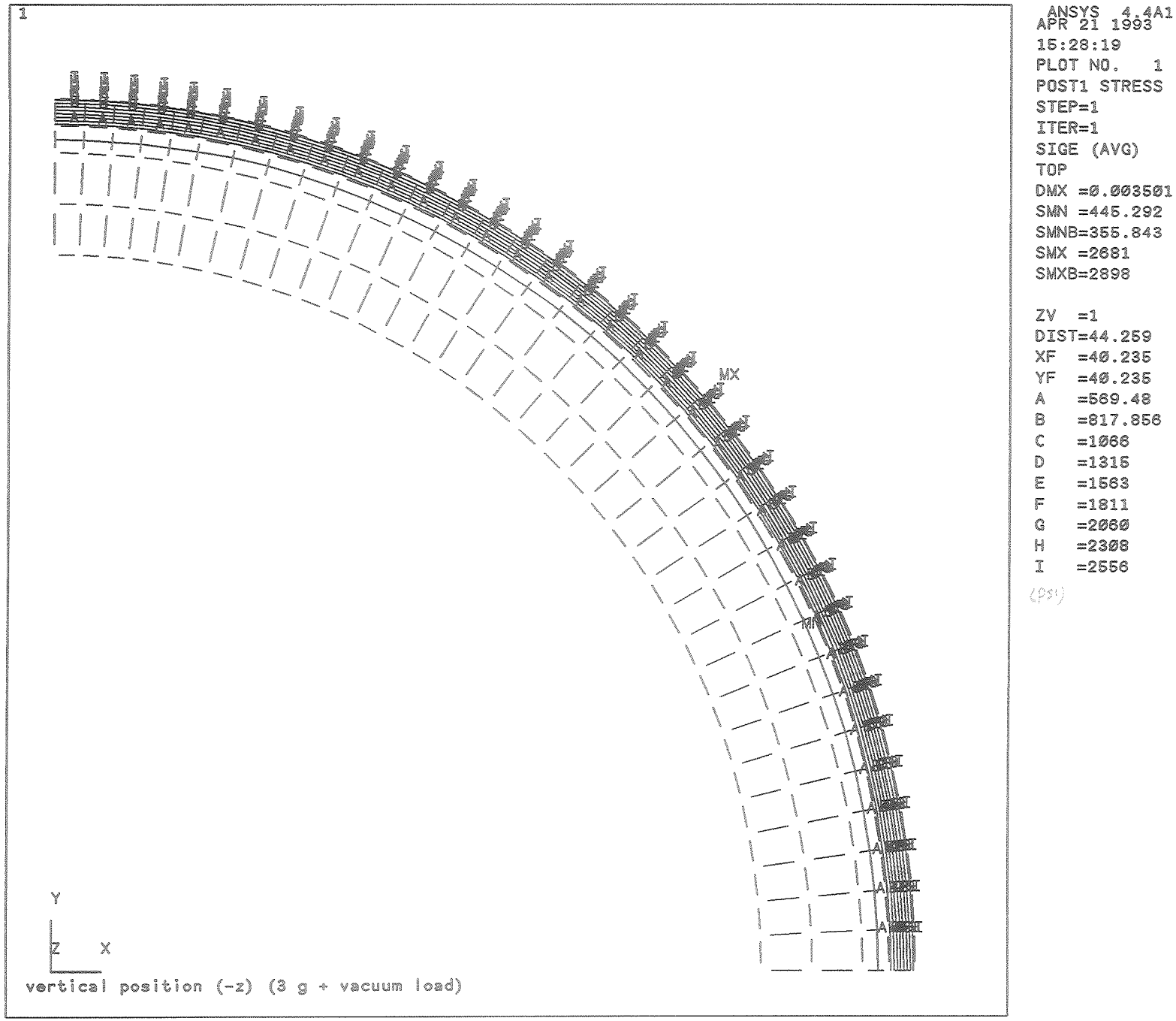

Figure 1-18 Stress plot for other-end bulkhead for the case of the - Z position.

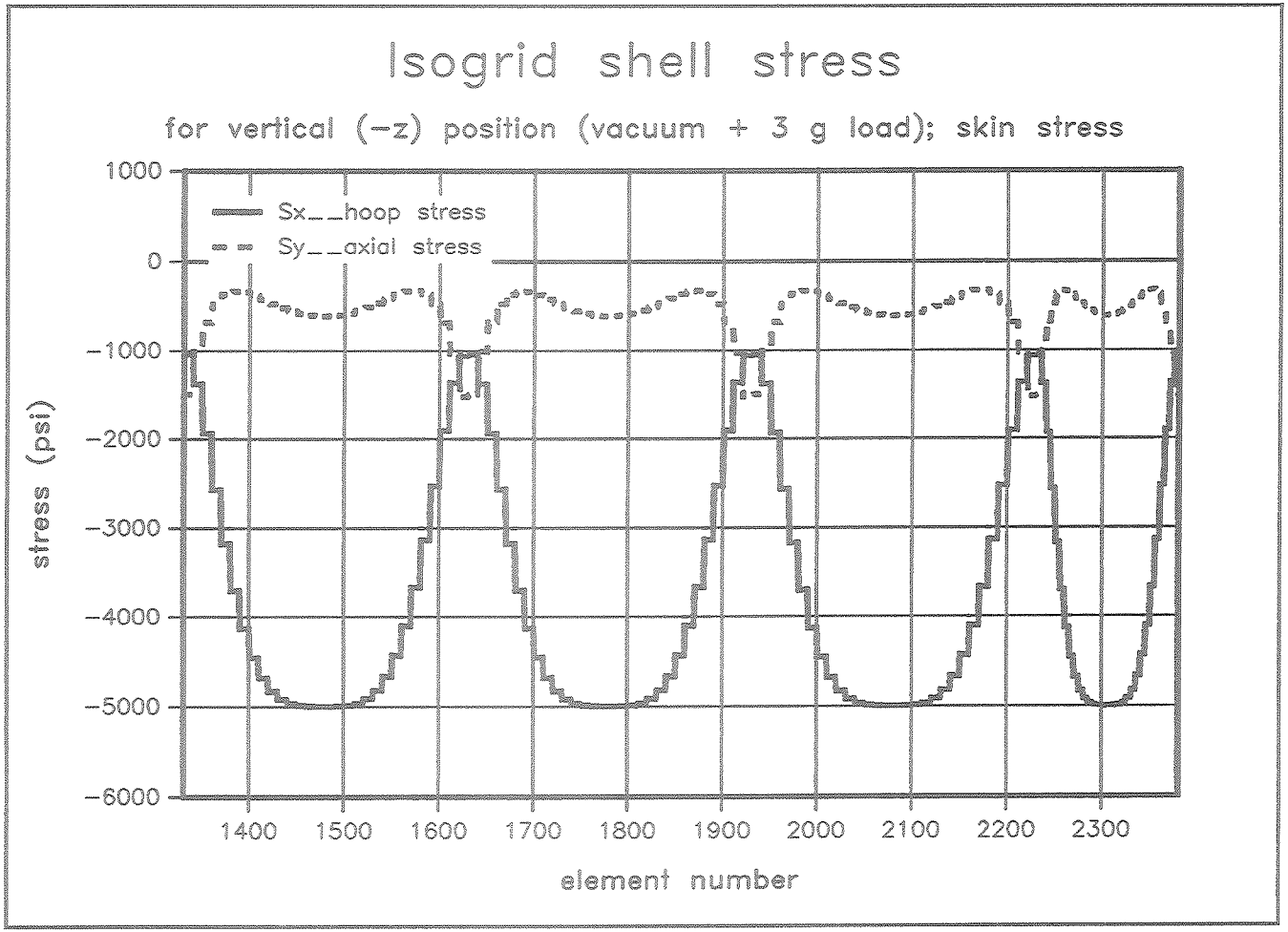

Figure 1-19 Isogrid shell skin stress for the case of the -Z position.

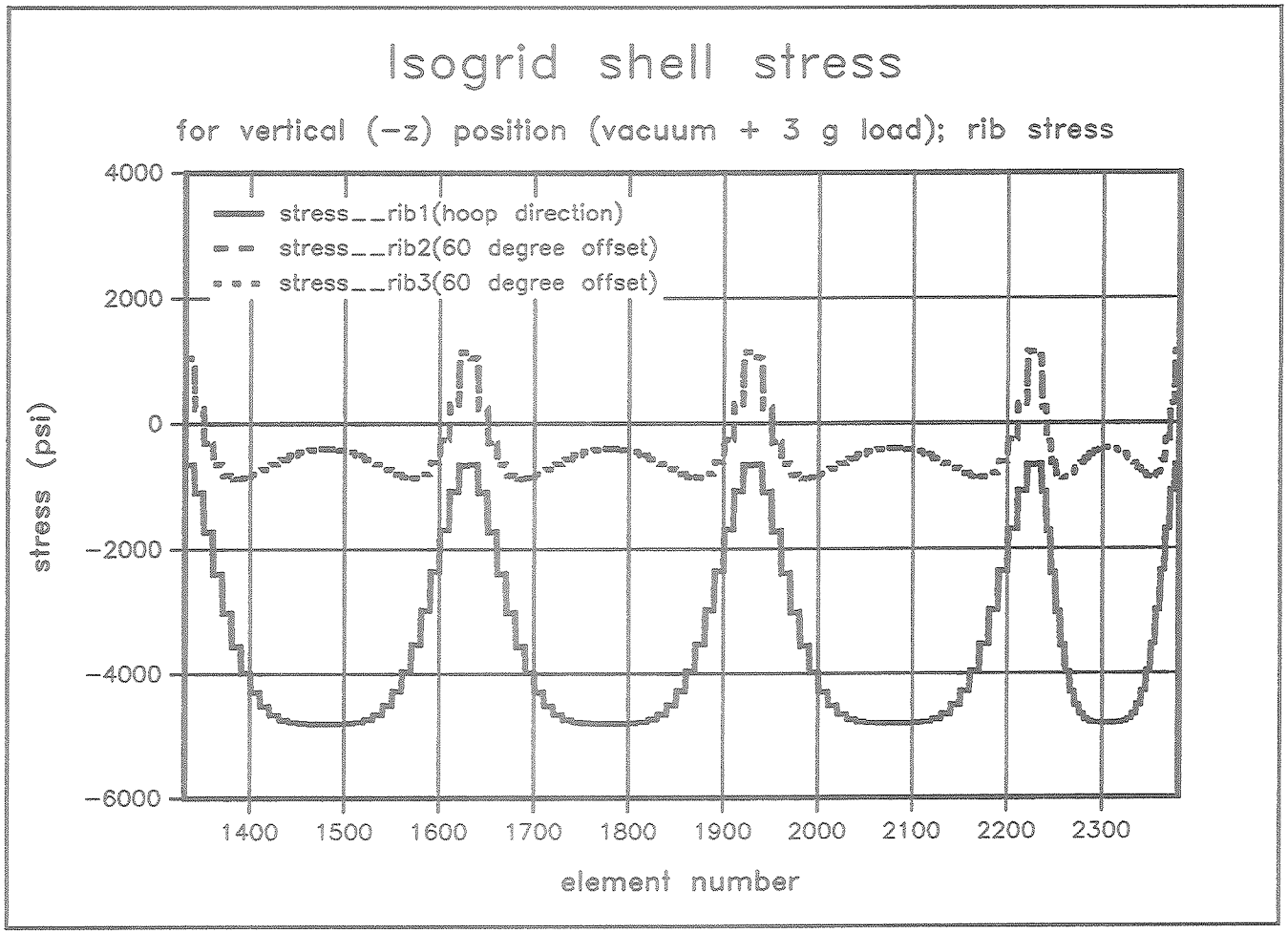

Figure 1-20 Isogrid shell rib stress for the case of the - Z position.

Chapter 2 Stress Analysis of the SDC Prototype Solenoid Vacuum Shell and Vertical Chimney

2.1 Geometry, Boundary Condition and Calculation

Chapter 2 presents results from a static stress analysis of the SDC solenoid prototype vacuum shell in the region where the vertical chimney penetrates the outer vacuum shell. The basic geometry for the prototype isogrid shell is same as in Chapter 1. The vertical chimney geometry is given as following:

Table 2-1 Chimney Pipe Geometry

Chimney Pipe Diameter:	12.75 in	(323.85 mm)
Chimney Length	6.00 in	(152.4 mm)
Chimney Pipe Wall Thickness	0.180 in	(4.572 mm)

Finite element model consisted of 2784 shell elements to model the shell and chimney pipe. A tootal of 48 beam elements is used to model the one-inch square reinforcement around the edge of chimney pipe. The isogrid shell is considered to be clamped at the chimney-end bulkhead as a fixed boundary condition following reference 2. Only one-half structure is needed for the purpose of the modeling because of symmetry. Four different load cases have been studied:

A) Vacuum load for isogrid shell and chimney pipe.

B) Vacuum load for isogrid shell and chimney pipe; plus 2000 lbf downward punching load on the top of chimney pipe; plus + X direction displacement (0.0125" on the top of the 6-inch long chimney pipe).

C) Vacuum load for isogrid shell and chimney pipe; plus 2000 lbf downward punching load on the top of chimney pipe; plus + Z direction displacement (0.035" on the top of the 6-inch long chimney pipe).

D) Vacuum load for isogrid shell and chimney pipe; plus 2000 lbf downward punching load on the top of chimney pipe; plus - Z direction displacement (0.0125" on the top of the 6-inch long chimney pipe).

Theresults of the calculation are summarized in Table 2-2

Table 2-2 Summary of Result

Load Case	Isogrid shell skin (psi)	Isogrid shell rib (psi)	Chimney pipe (max) (psi)
Case A (MPa)	3953 (27.26)	4064 (28.02)	3095 (21.34)
Case B (MPa)	4565 (31.47)	5343 (36.84)	7595 (52.37)
Case C (MPa)	4925 (33.96)	8603 (59.32)	14174 (97.73)
Case D (MPa)	3400 (23.44)	3717 (25.63)	8225 (56.71)

2.2 Discussion of Result

From Table 2-2 , it can be seen that Case C has a large stress for the chimney pipe at the vicinity of the intersection of the isogrid shell and chimney pipe (Fig. 2-11). Considering the fact that the boundary condition imposed on Case C is a most severe one, with the extra displacement in the same direction as the displacement resulting from the vacuum load, the high stress is not surprising. However, this stress decays very quickly as it goes away from edge as shown in Fig. 2-11. After one element, it goes down to about 5,000 psi (34.47 MPa) which is the primary membrane stress remote from

junction with the outer shell. This primary membrane stress is below to the allowable stress. In fact, in according to the ASME code[5], the total stress, including primary and secondary stress, can go as high as three times its allowable stress. Therefore, we concluded that all cases to be considered here satisfy the requirement of the ASME code.

Regarding an allowable displacement at the top of the 6-inch long chimney pipe, the result shows that 0.0125" on any of these +X, -Z and + Z direction with a combined punch and vacuum load cause no safety problem. Furthermore, if the total length of chimney is about 120", the maximum allowable displacement on the top surface(120") can be estimated as

Disp(120" high)=0.0125*120/6=0.25 in (6.35 mm)

This implies that displacement at the top of 120" (3 m) chimney should be limited to 0.25"(6.35 mm) envelope. However, this estimation gives an upper limit to the displacement at 120 in (3048 mm) In fact, the actual stiffness of the chimney from 6" to 120" is finite. The deflection curve is not a linear as was assumed above. As a result, one may expect a lower working stress than calculated. Nevertheless, by limiting the deflection to 0.25"(6.35 mm), we are on the safe side. As an extra comment, if this 0.25" limit is too restrictive, an analysis using the actual geometry of the chimney is recommended.

2.3 List of Figure Attached to the Chapter 2

Figure 2-1 Structure configuration of isogrid shell and vertical chimney pipe.
Figure 2-2 Structure deflection for Case A.
Figure 2-3 Stress plot of the chimney pipe for Case A.
Figure 2-4 Element arrangement and element coordinate for the shell-chimney collar region.
Figure 2-5 Isogrid shell skin stress of shell-chimney collar for the Case A.
Figure 2-6 Isogrid shell skin stress of shell-chimney collar for the Case A.
Figure 2-7 Structure deflection for Case B.
Figure 2-8 Stress plot of the chimney pipe for Case B.
Figure 2-9 Isogrid shell skin stress of shell-chimney collar for the Case B.
Figure 2-10 Isogrid shell skin stress of shell-chimney collar for the Case B.
Figure 2-11 Structure deflection for Case C.

Figure 2-12 Stress plot of the chimney pipe for Case C.
Figure 2-13 Isogrid shell skin stress of shell-chimney collar for the Case C.
Figure 2-14 Isogrid shell skin stress of shell-chimney collar for the Case C.
Figure 2-15 Structure deflection for Case D.
Figure 2-16 Stress plot of the chimney pipe for Case D.
Figure 2-17 Isogrid shell skin stress of shell-chimney collar for the Case D.
Figure 2-18 Isogrid shell skin stress of shell-chimney collar for the Case D.

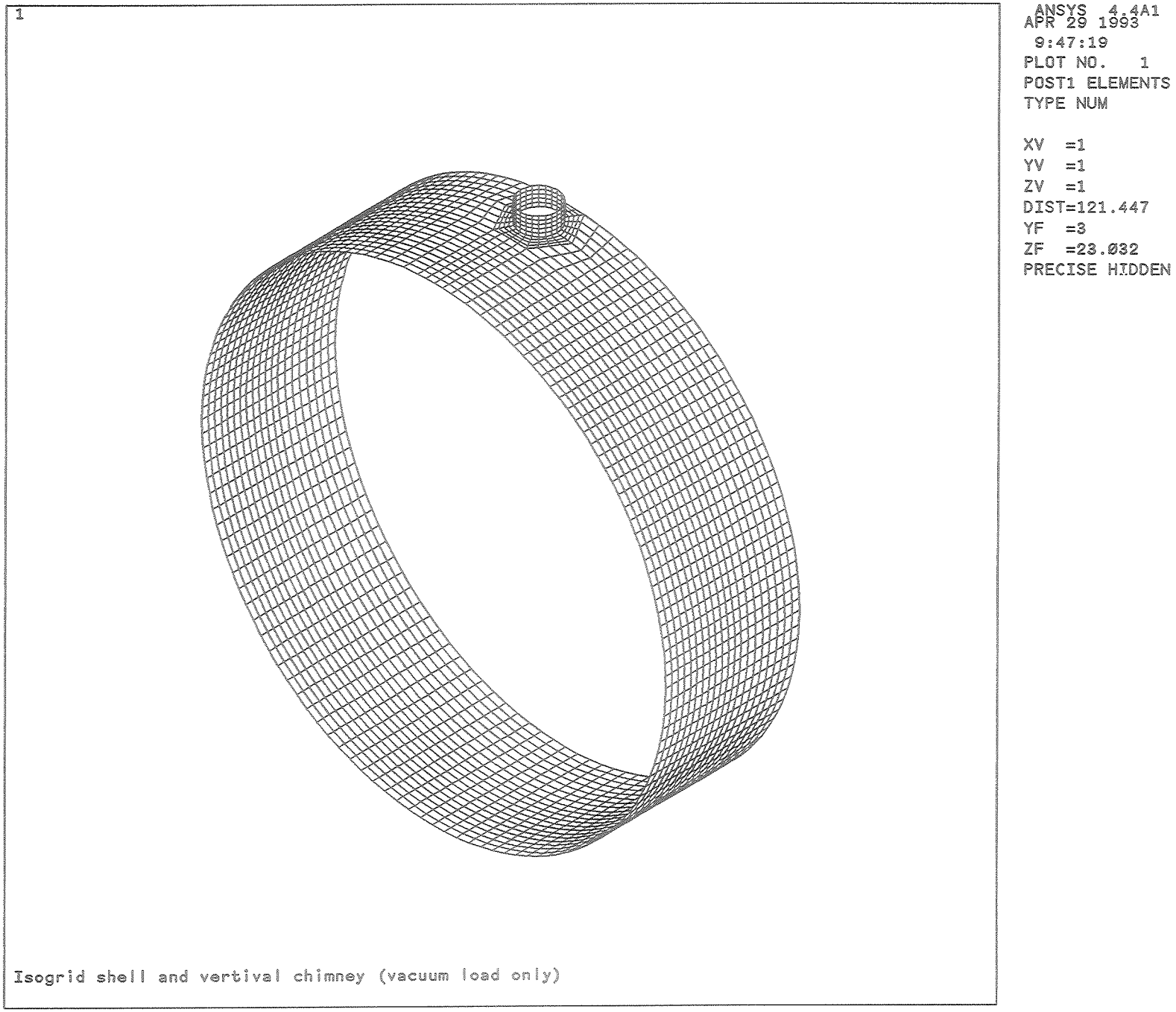

Figure 2-1 Structure configuration of isogrid shell and vertical chimney pipe.

Figure 2-2 Structure deflection for Case A.

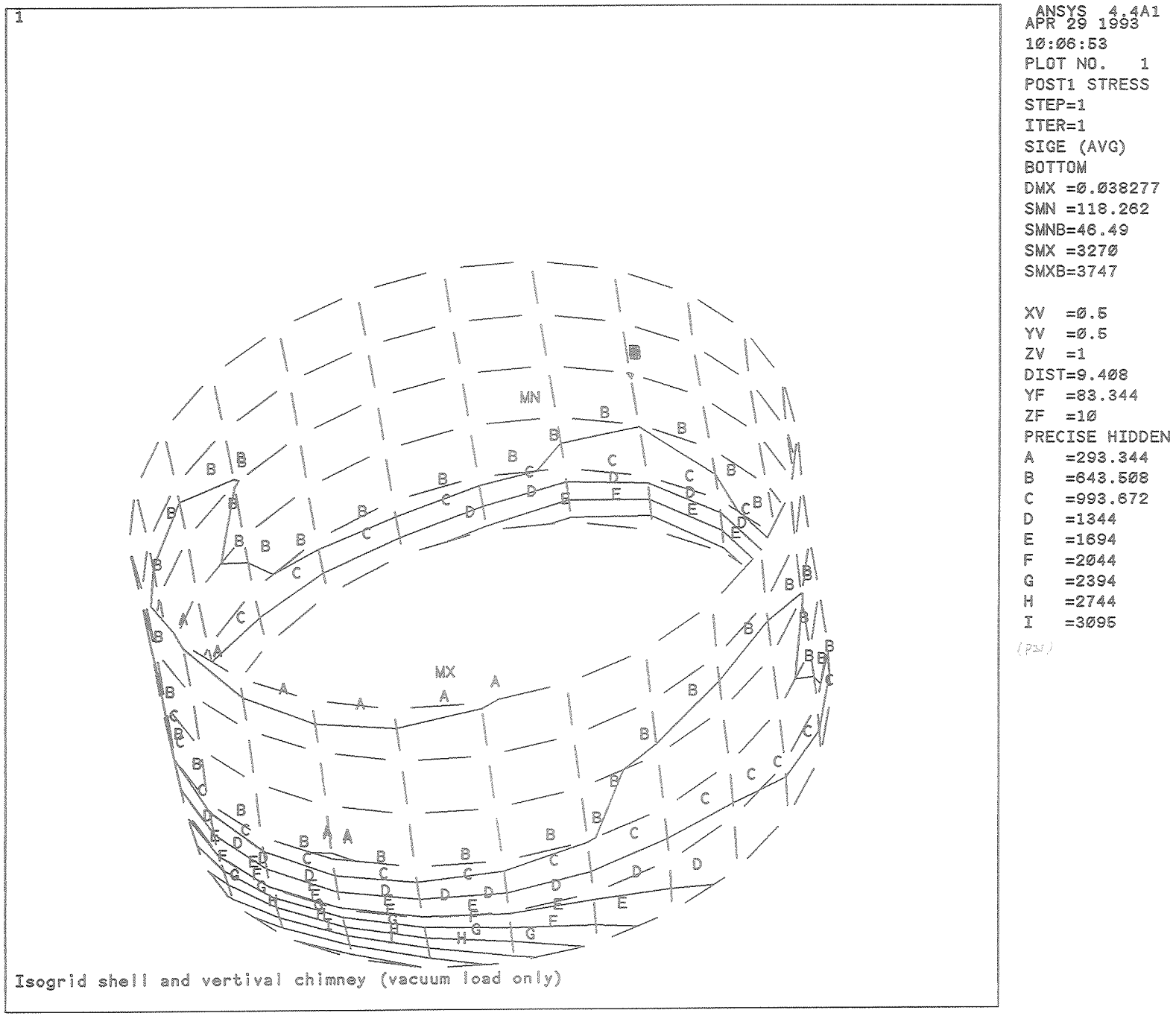

ANSYS 4.4A1
APR 29 1993
10:06:53
PLOT NO. 1
POST1 STRESS
STEP=1
ITER=1
SIGE (AVG)
BOTTOM
DMX =0.038277
SMN =118.262
SMNB=46.49
SMX =3270
SMXB=3747

XV =0.5
YV =0.5
ZV =1
DIST=9.408
YF =83.344
ZF =10
PRECISE HIDDEN
A =293.344
B =643.508
C =993.672
D =1344
E =1694
F =2044
G =2394
H =2744
I =3095
(psi)

Figure 2-3 Stress plot of the chimney pipe for Case A.

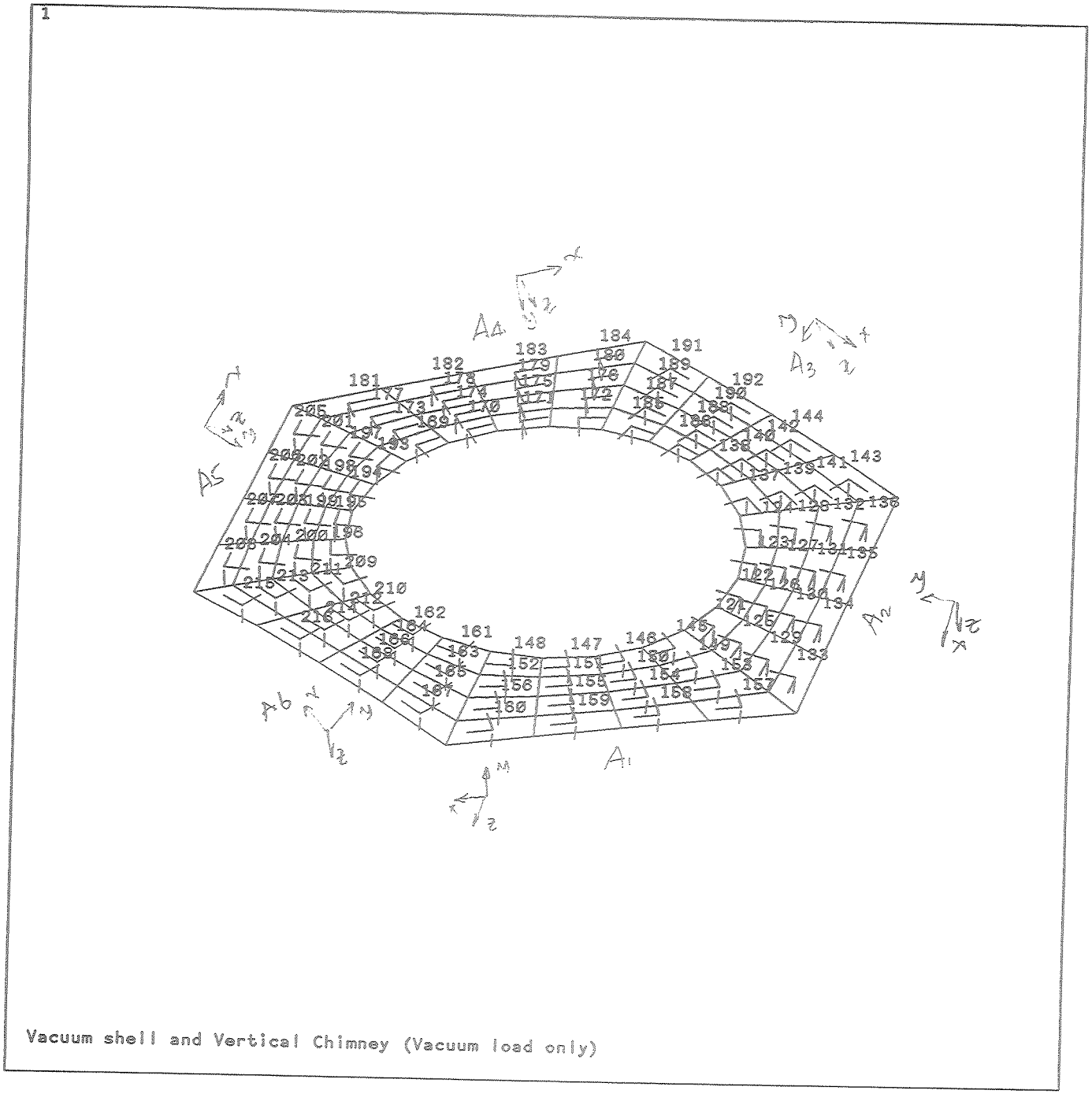

Figure 2-4 Element arrangement and element coordinate for the shell-chimney collar region.

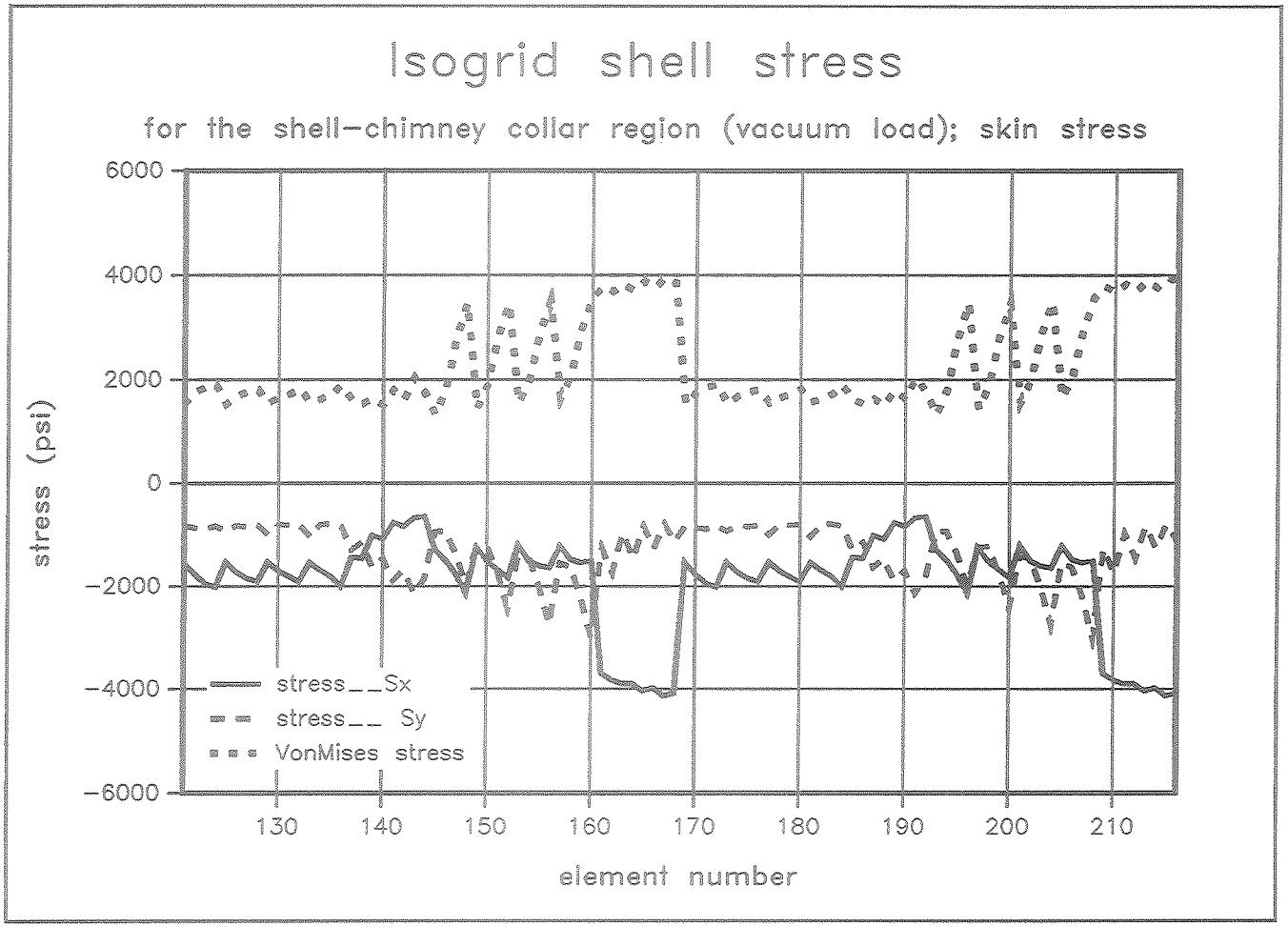

Figure 2-5 Isogrid shell skin stress of shell-chimney collar for the Case A.

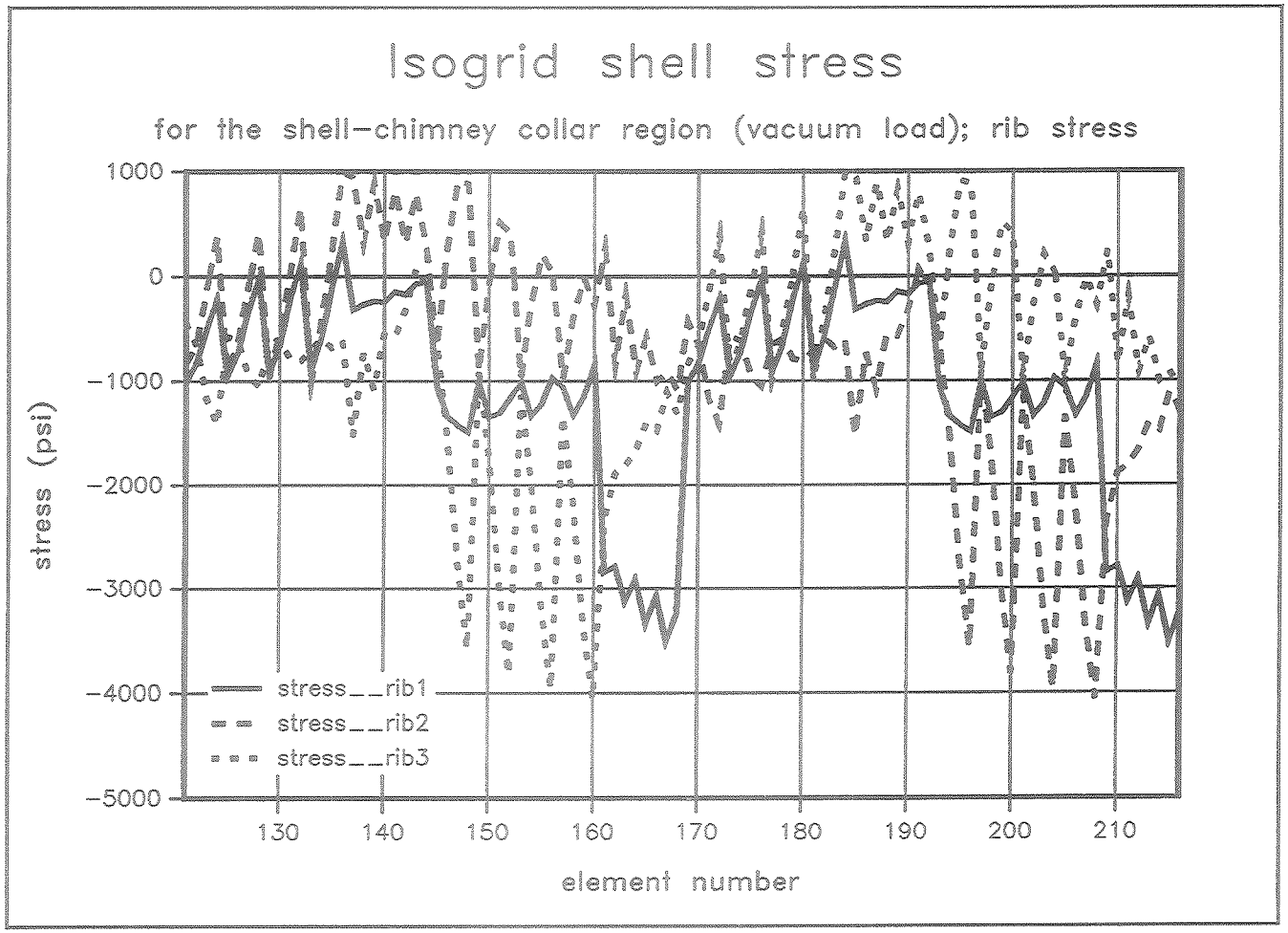

Figure 2-6 Isogrid shell skin stress of shell-chimney collar for the Case A.

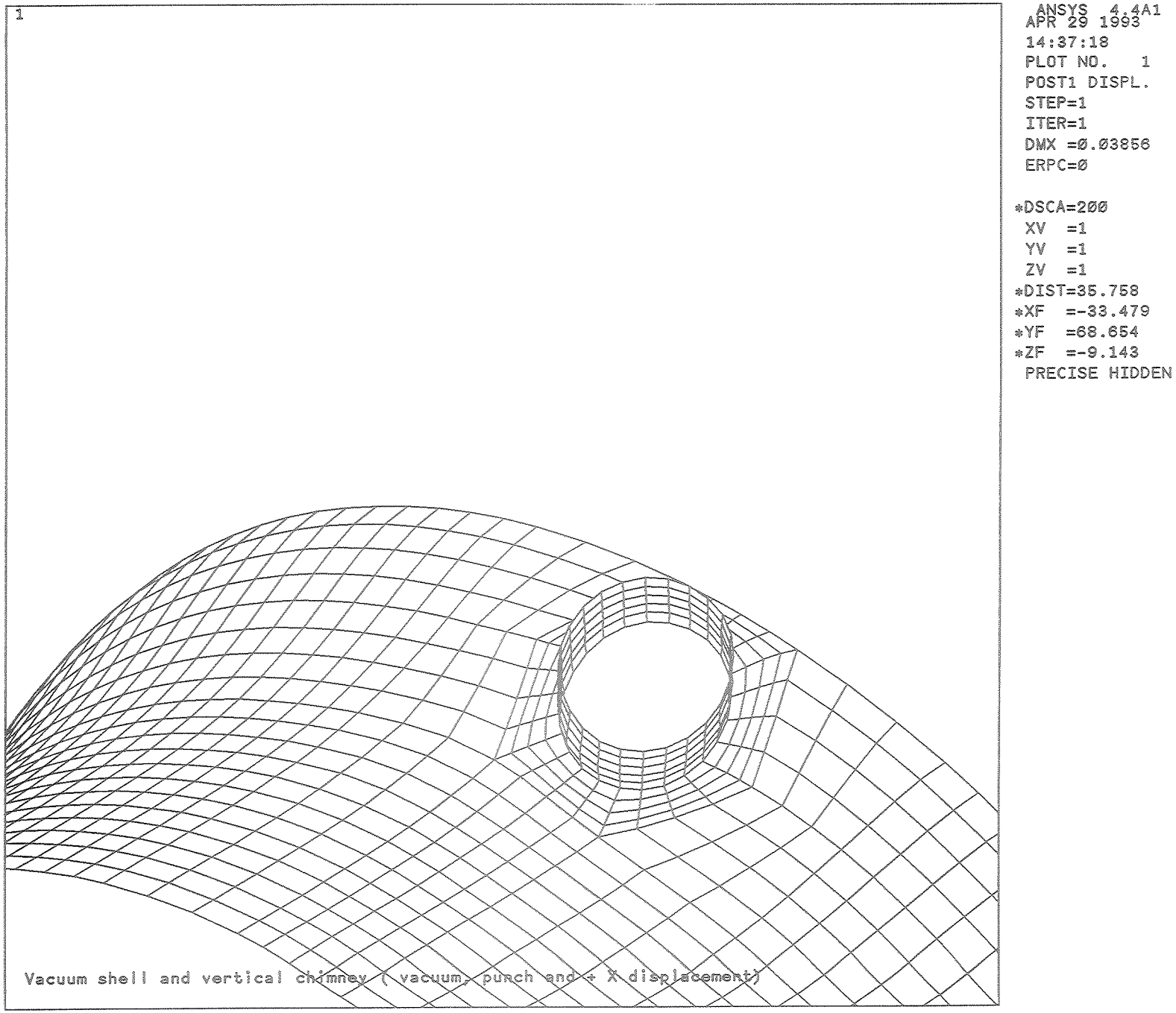

Figure 2-7 Structure deflection for Case B.

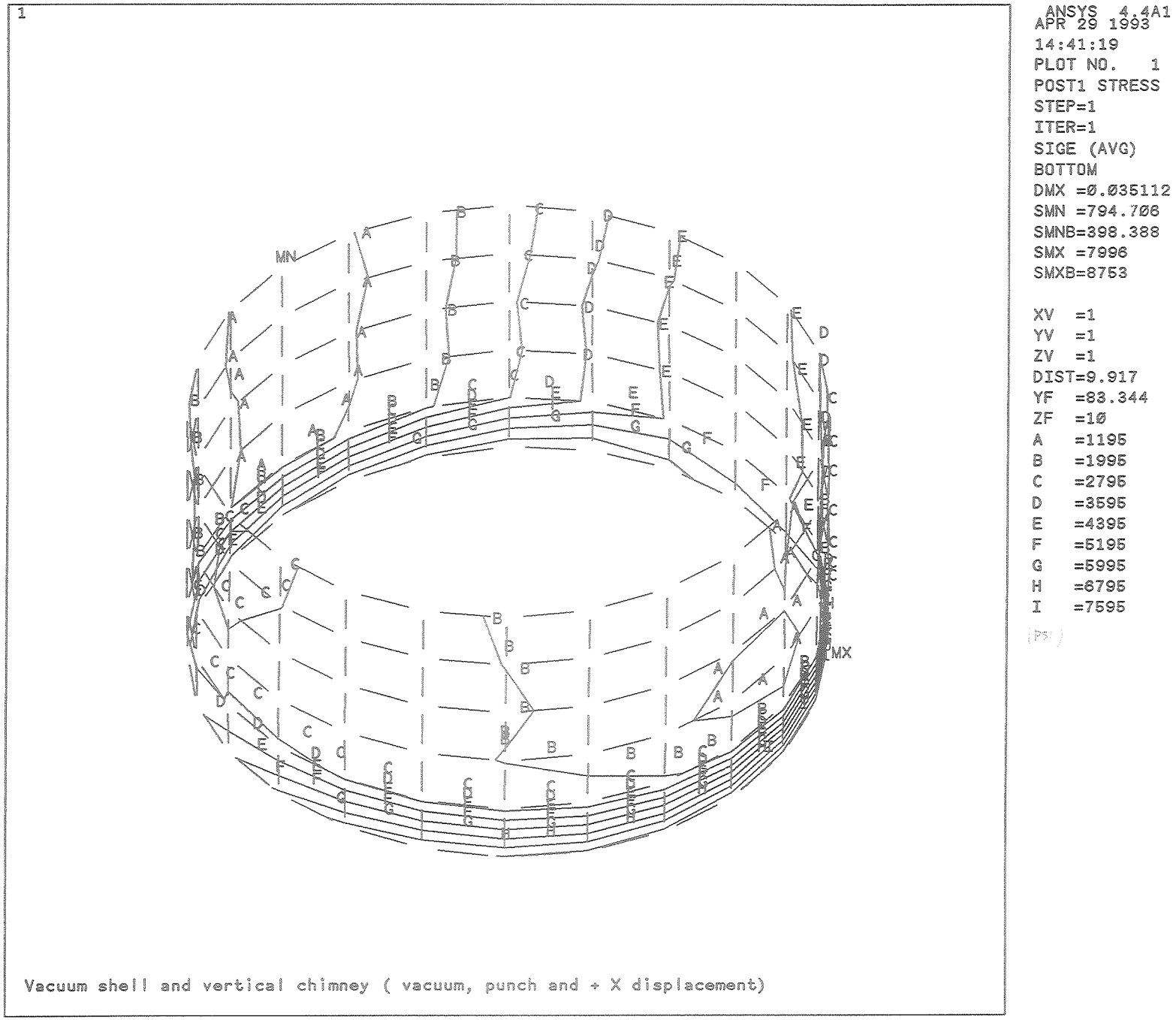

ANSYS 4.4A1
APR 29 1993
14:41:19
PLOT NO. 1
POST1 STRESS
STEP=1
ITER=1
SIGE (AVG)
BOTTOM
DMX =0.035112
SMN =794.706
SMNB=398.388
SMX =7996
SMXB=8753

XV =1
YV =1
ZV =1
DIST=9.917
YF =83.344
ZF =10
A =1195
B =1995
C =2795
D =3595
E =4395
F =5195
G =5995
H =6795
I =7595

Figure 2-8 Stress plot of the chimney pipe for Case B.

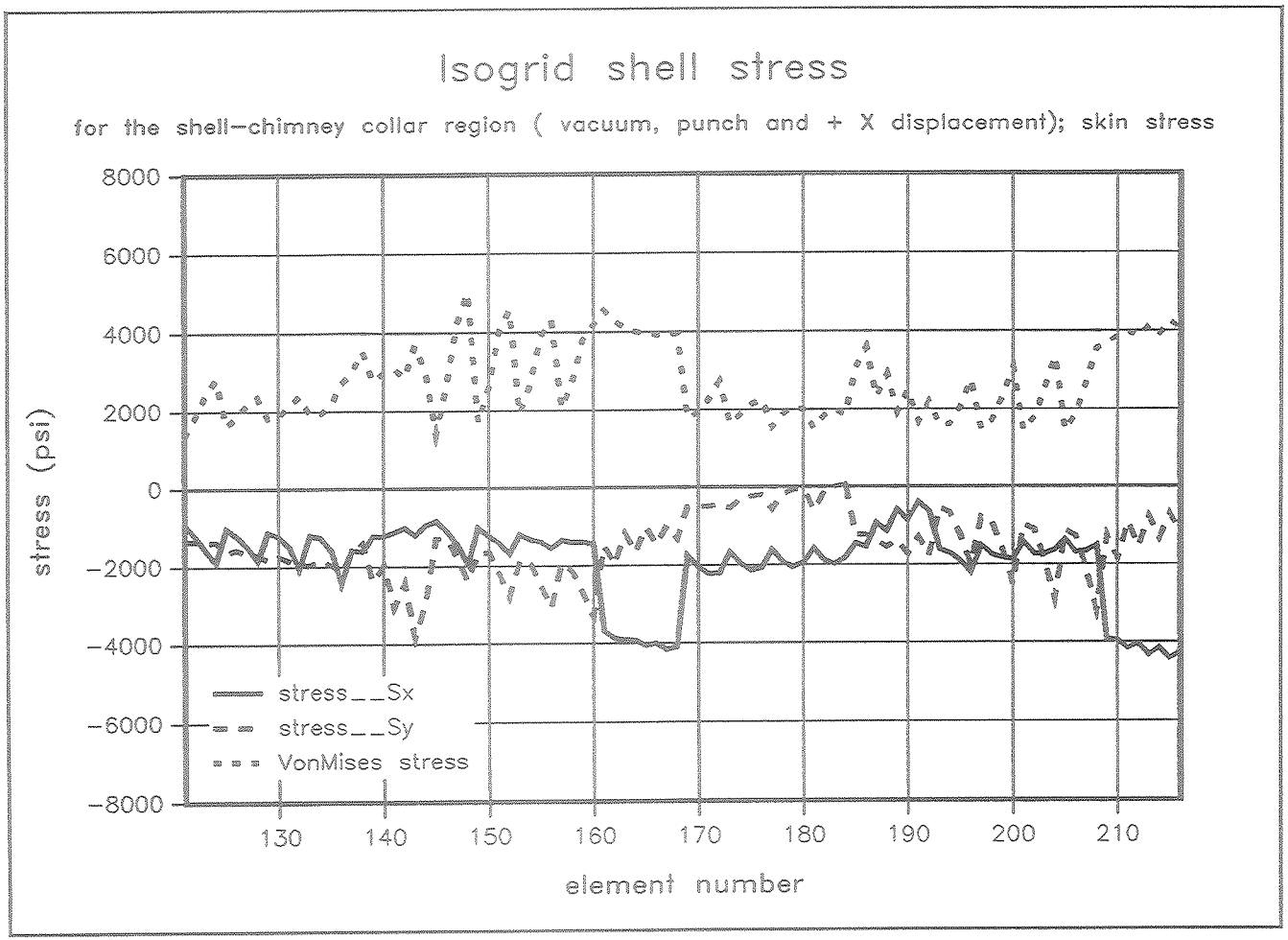

Figure 2-9 Isogrid shell skin stress of shell-chimney collar for the Case B.

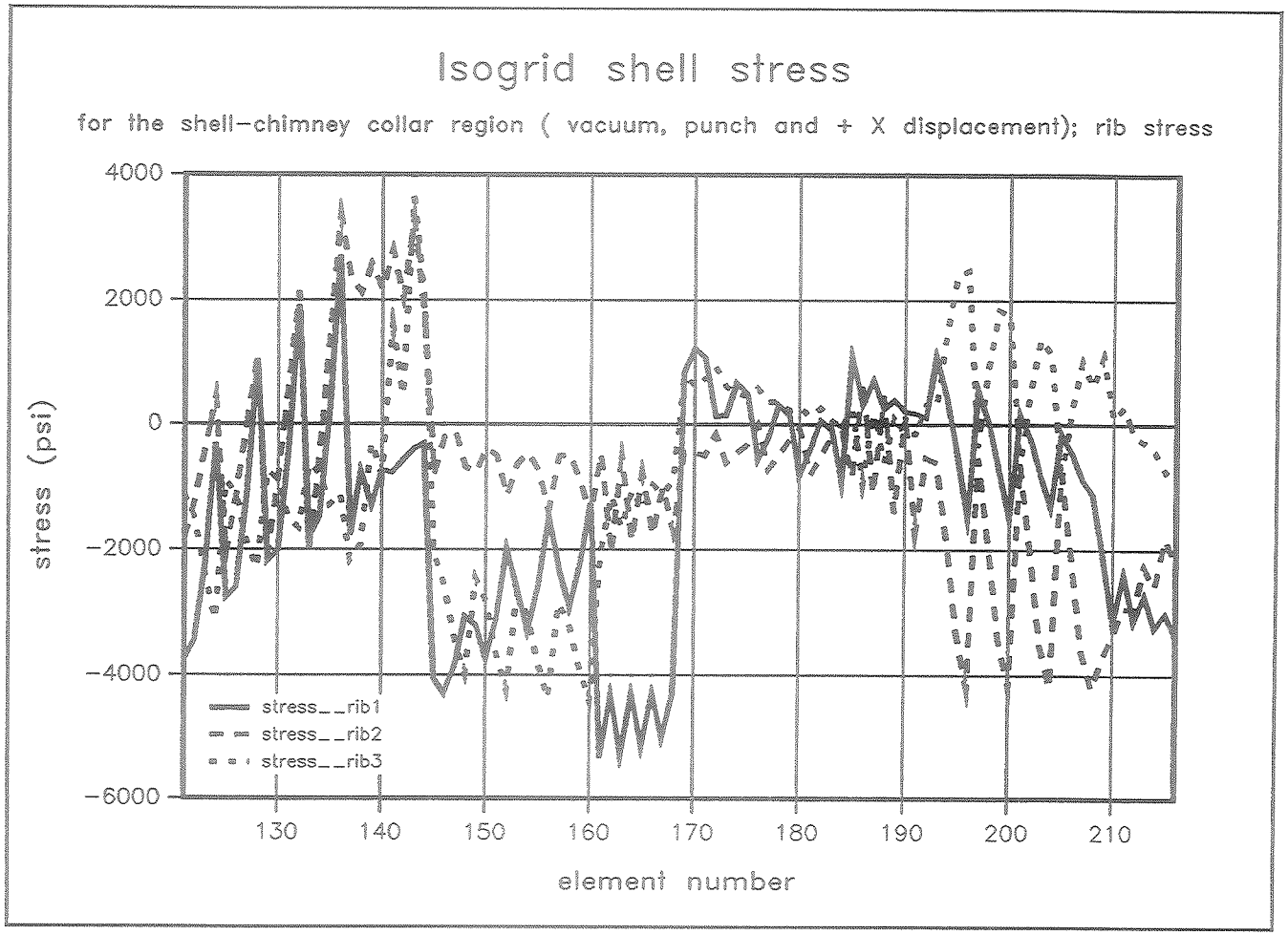

Figure 2-10 Isogrid shell skin stress of shell-chimney collar for the Case B.

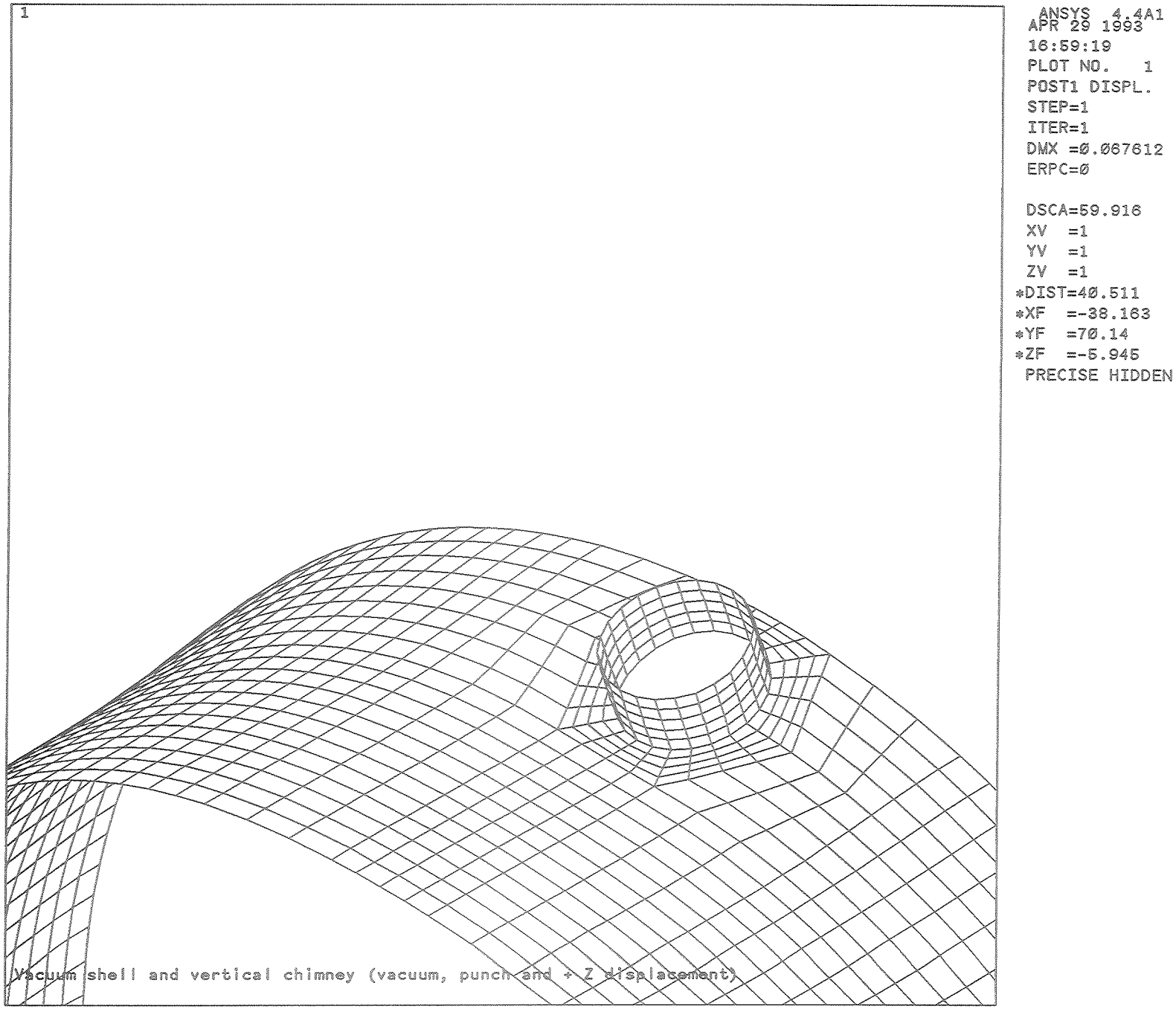

Figure 2-11 Structure deflection for Case C.

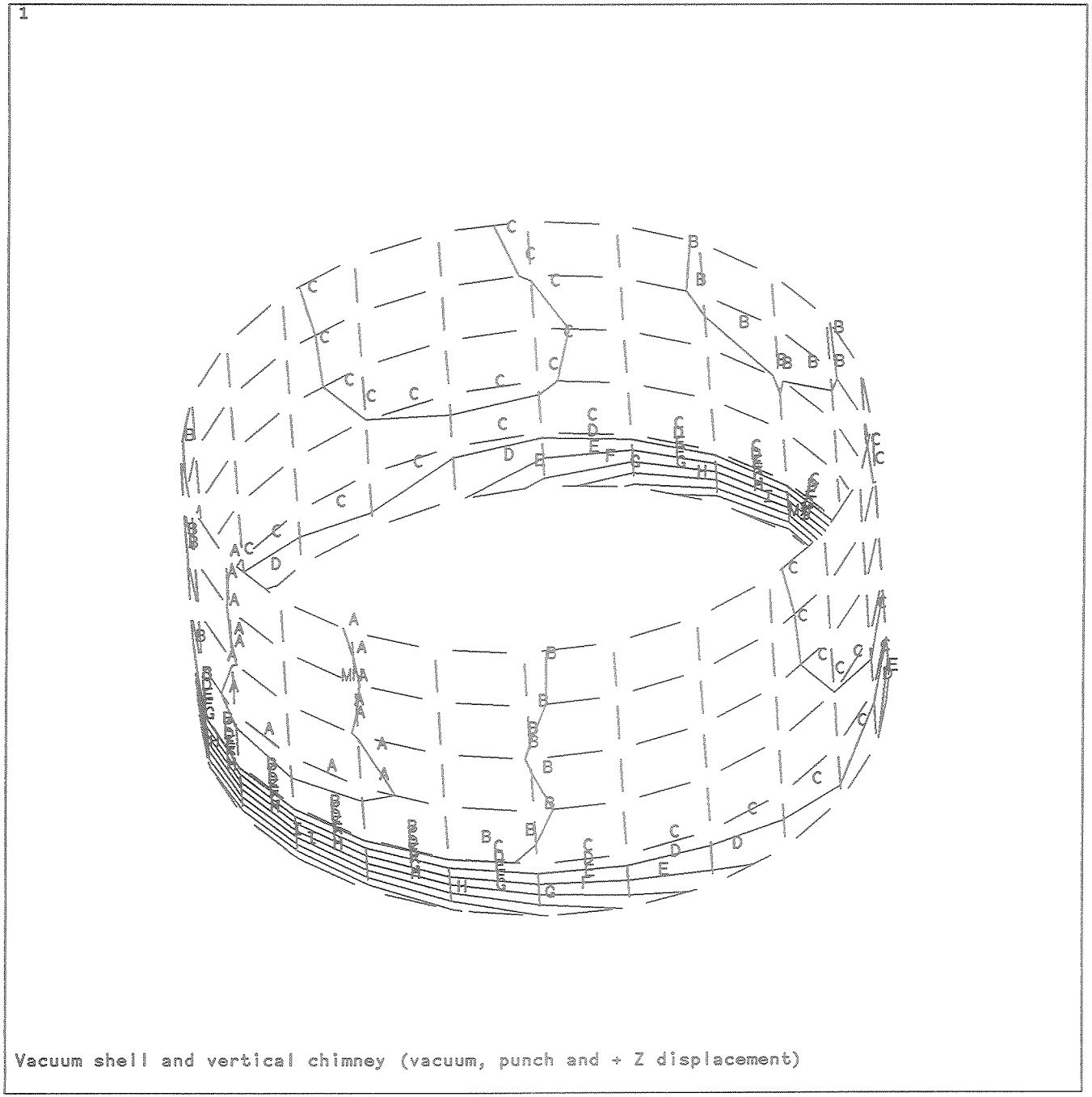

Figure 2-12 Stress plot of the chimney pipe for Case C.

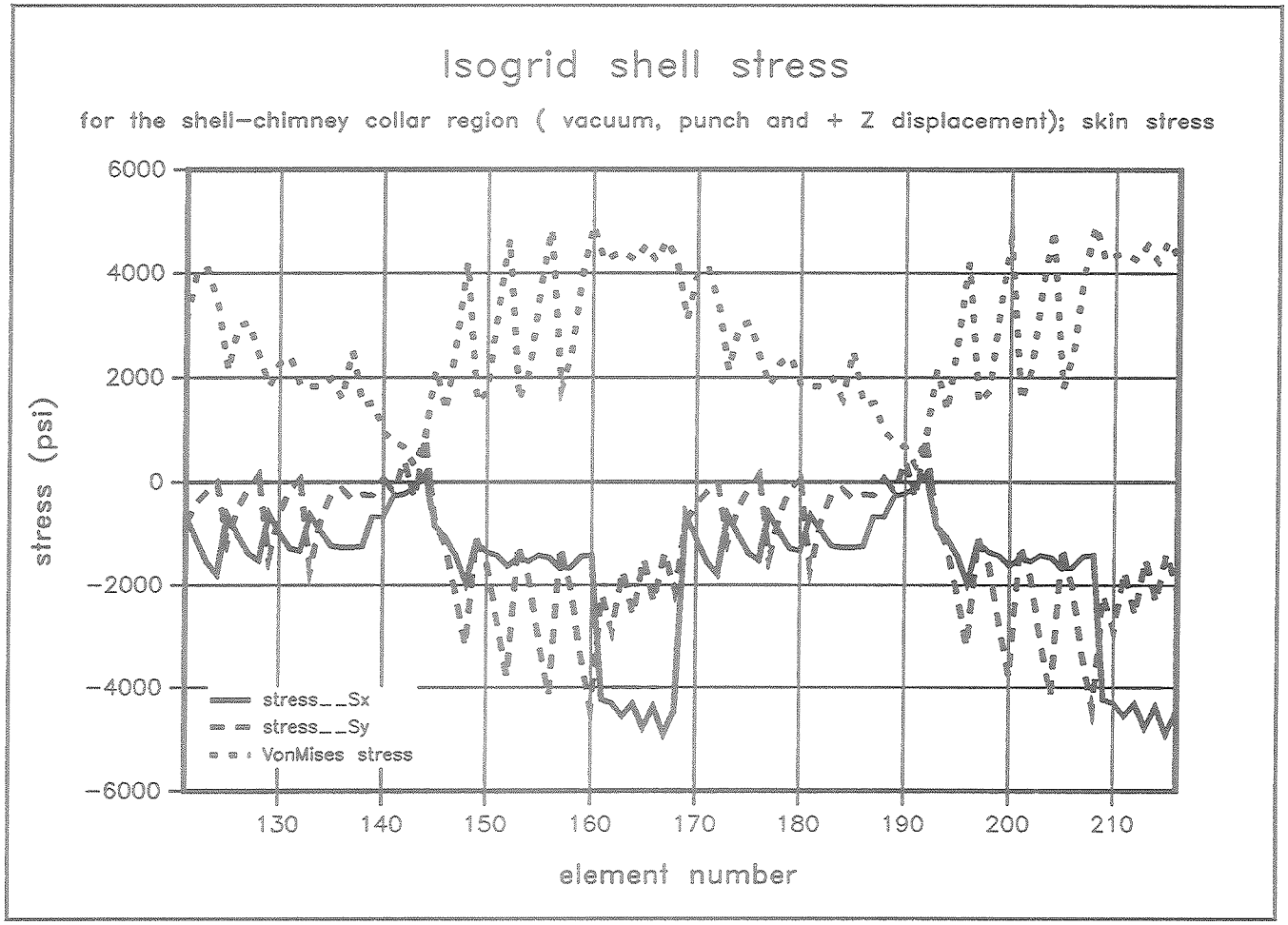

Figure 2-13 Isogrid shell skin stress of shell-chimney collar for the Case C.

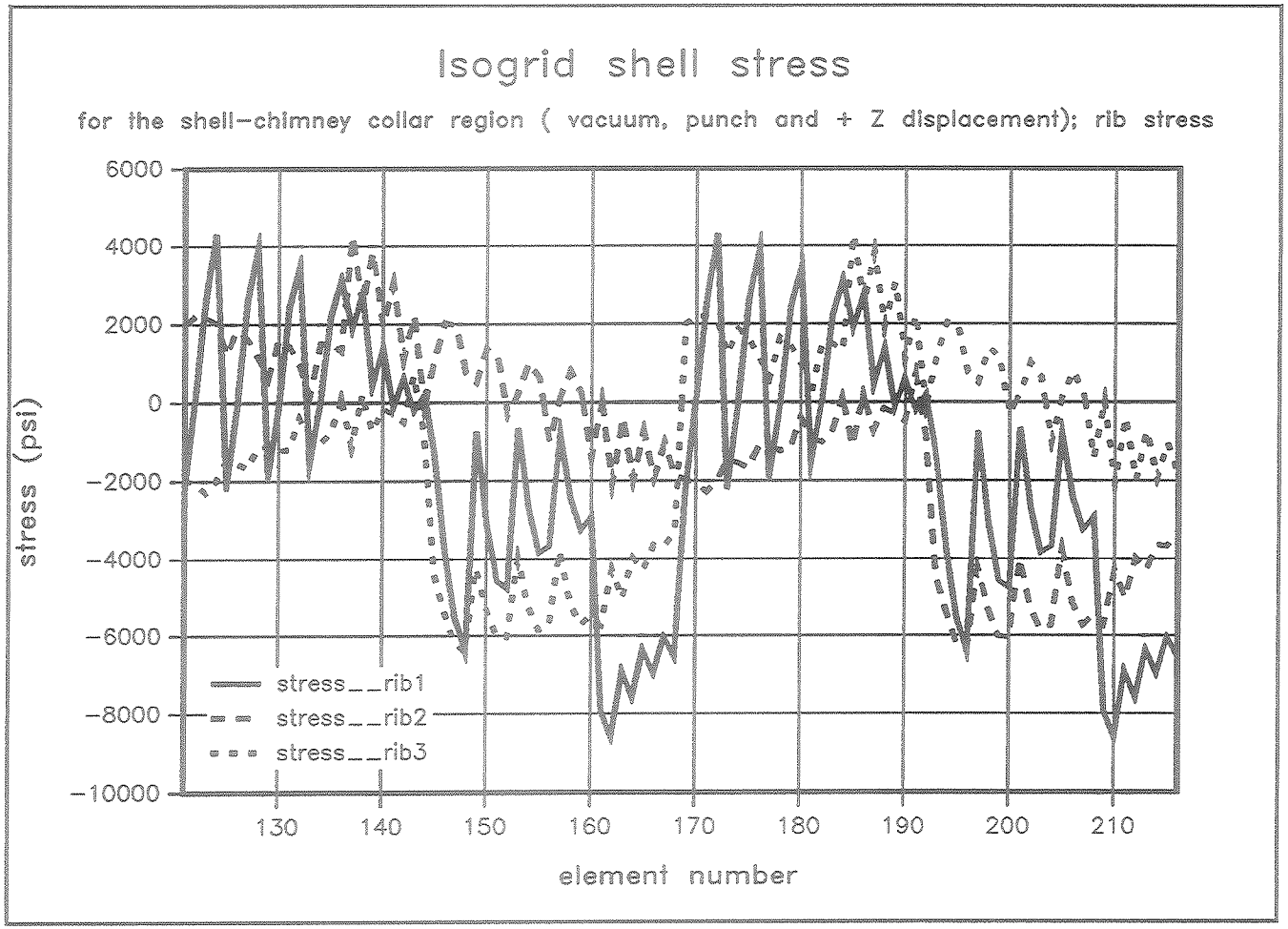

Figure 2-14 Isogrid shell skin stress of shell-chimney collar for the Case C.

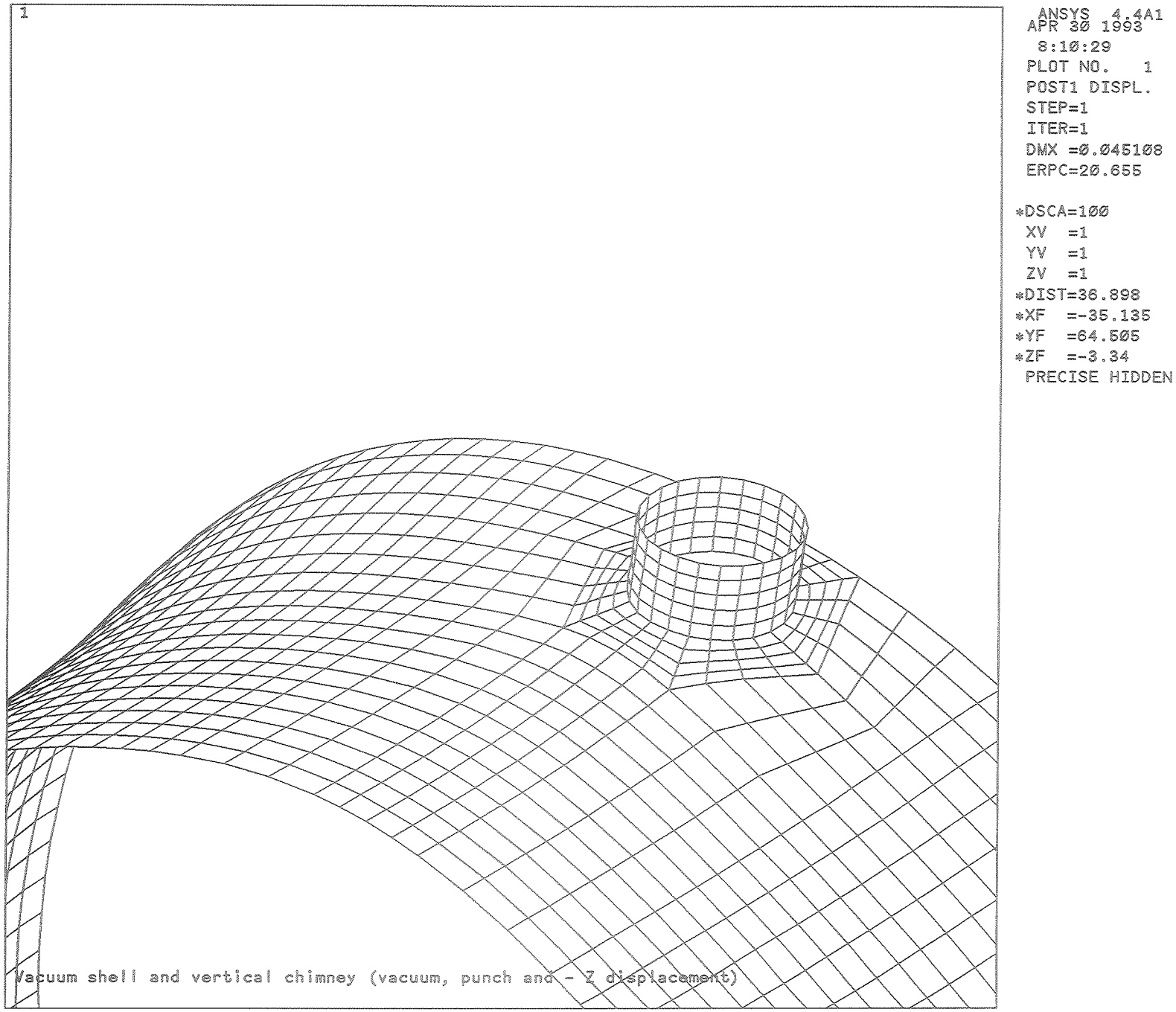

Figure 2-15 Structure deflection for Case D.

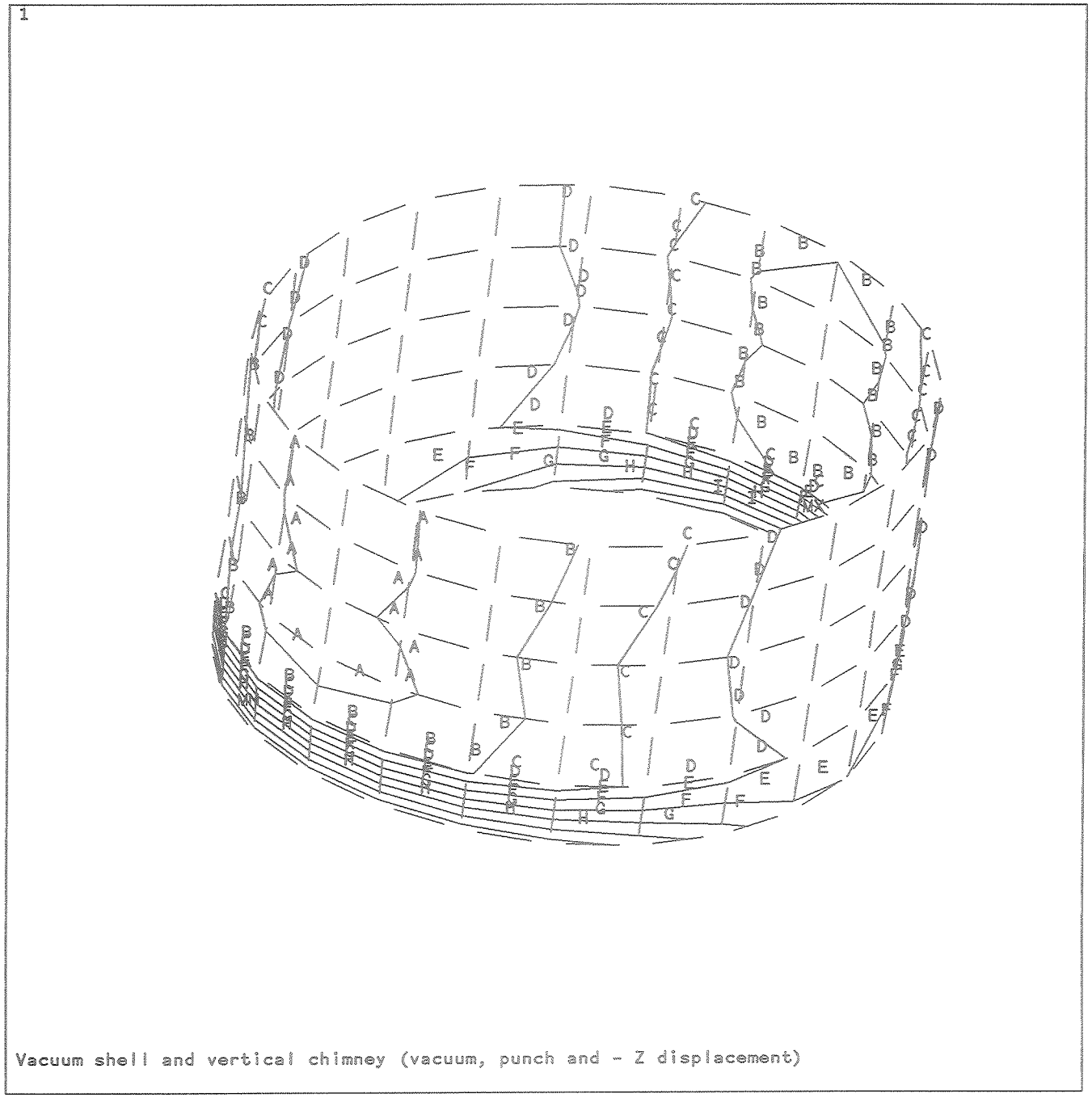

Figure 2-16 Stress plot of the chimney pipe for Case D.

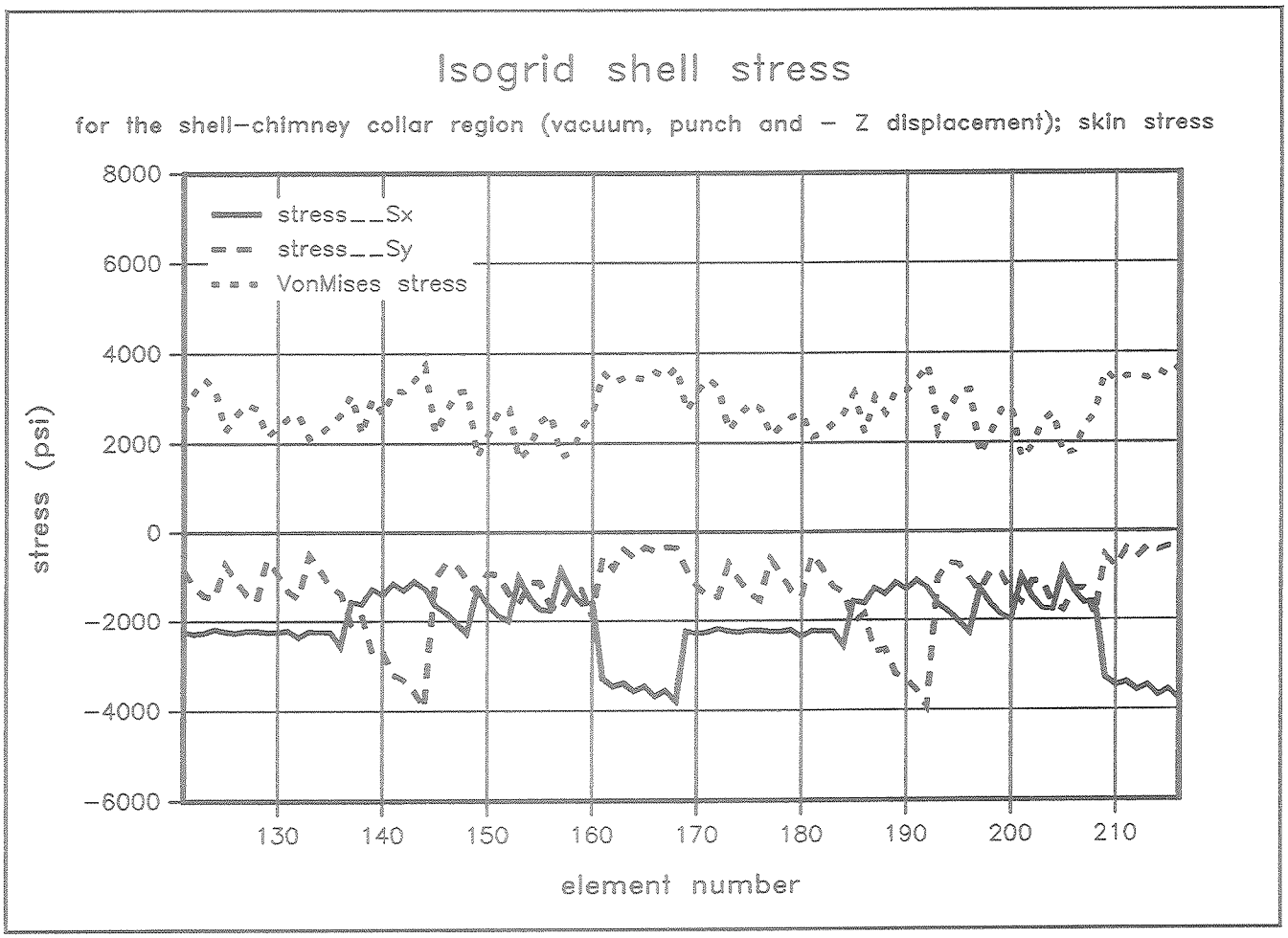

Figure 2-17 Isogrid shell skin stress of shell-chimney collar for the Case D.

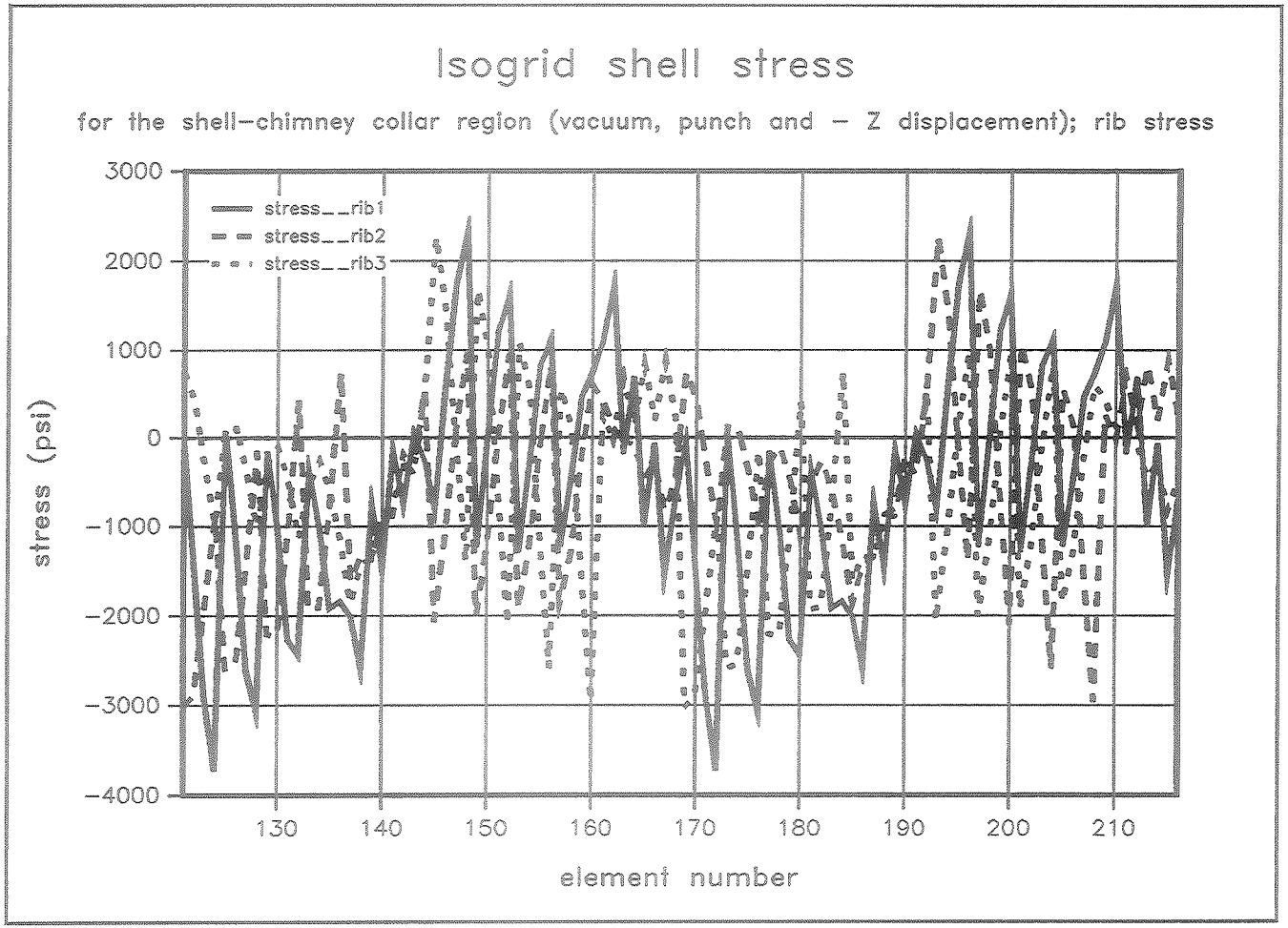

Figure 2-18 Isogrid shell skin stress of shell-chimney collar for the Case D.

Chapter 3 Stress Analysis of the SDC Vacuum shell and Panel Weld Joints

3.1 Geometry , Boundary Condition and Calculation

Chapter 3 presents a static stress analysis for the SDC prototype vacuum shell and the panel to panel weld joints. The basic geometry for the vacuum shell and panel is given as Table 3-1

Table 3-1 Prototype Vacuum Shell Geometry

Shell Diameter	162.2 in	(4120 mm)
Shell Length	92.126 in	(2340 mm)
Panel Length	92.126 in	(2340 mm)

Three 120 degree panels are welded to form the prototype vacuum shell as shown in Fig 3-1. The current isogrid design geometry is given in Table 1-2 through Table 1-4 in Chapter 1. Geometry for the panel joint cross section is shown in Figure 3-2 based on the drawings SSC-SDD-000365 and 375. Dimension values for this section are given in Table 3-2 and computed section properties are given in Table 3-3

Table 3-2 Panel Joint Geometry

Section Height	h	2.2000 in	(55.88 mm)
Flange Width	W_f	0.5750 in	(14.605 mm)
Flange Thickness	t_f	0.3125 in	(7.9375 mm)
Top Skin Thickness	t_p	0.1875 in	(4.7625 mm)
Top Skin Width	W_p	2.0000 in	(50.80 mm)
Rib Width	W_r	0.1500 in	(3.81 mm)
Rib Height	h_r	1.8000 in	(45.72 mm)
Skin Thickness	t_s	0.1875 in	(4.7625 mm)
Skin Doubler	t'_s	0.0625 in	(1.5875 mm)

Table 3-3 Panel Joint Section Properties

Area	A	1.8007 in^2	(1162 mm^2)
Centroid Position	C	1.178 in	(29.92 mm)
Moment of Inertia	I_y	1.5527 in^4	(6.46×10^5 mm^4)
Moment of Inertia	I_z	1.3527 in^4	(5.63×10^5 mm^4)

The SDC prototype vacuum shell and panel joint were modeled using a three-dimensional finite element representation with a shell element for isogrid shell and beam element for the panel joint section as shown in Fig. 3-1. The boundary condition for the vacuum isogrid shell is considered clamped at the bulkheads as same as reference3. The one end is fully restrained, while the another end as permitted to move longitudinally. Only vacuum load is considered in this analysis. The methodology of the stress calculation for the isogrid shell is same as chapter 1. The stress calculation for joint panel is obtained by extracting the resultant force and moment for each beam element such that stress at four corners can be correctly computed (Appendix D). Results are summarized in Table 3-4 .

Table 3-4 Summary of Result

	Isogrid vacuum shell		Joint Panel
	Skin	Rib	
Max. stress (psi) (MPa)	5075 (34.99)	5080 (35.03)	4704 (32.45)

3.2 Discussion of results

The maximum stress for isogrid shell is about 5,000 psi(34.47 MPa) which is well below to the allowable stress for the aluminum 5083. The stress for the panel joint is about 4,704 psi (32.45 Mpa). Compared with the allowable stress of 10,000 psi(68.95 MPa) for 5083, the joint is designed in accoding with the ASME code.

3.3 List of Figures included in this chapter

Figure 3-1. Structure configuration for three panels and weld joints.
Figure 3-2 Geometry of panel joint section.
Figure 3-3 Deflection of shell structure.
Figure 3-4 Deflection of the panel weld joint.
Figure 3-5 Skin stress of the isogrid shell.
Figure 3-6 Rib stress of the isogrid shell.

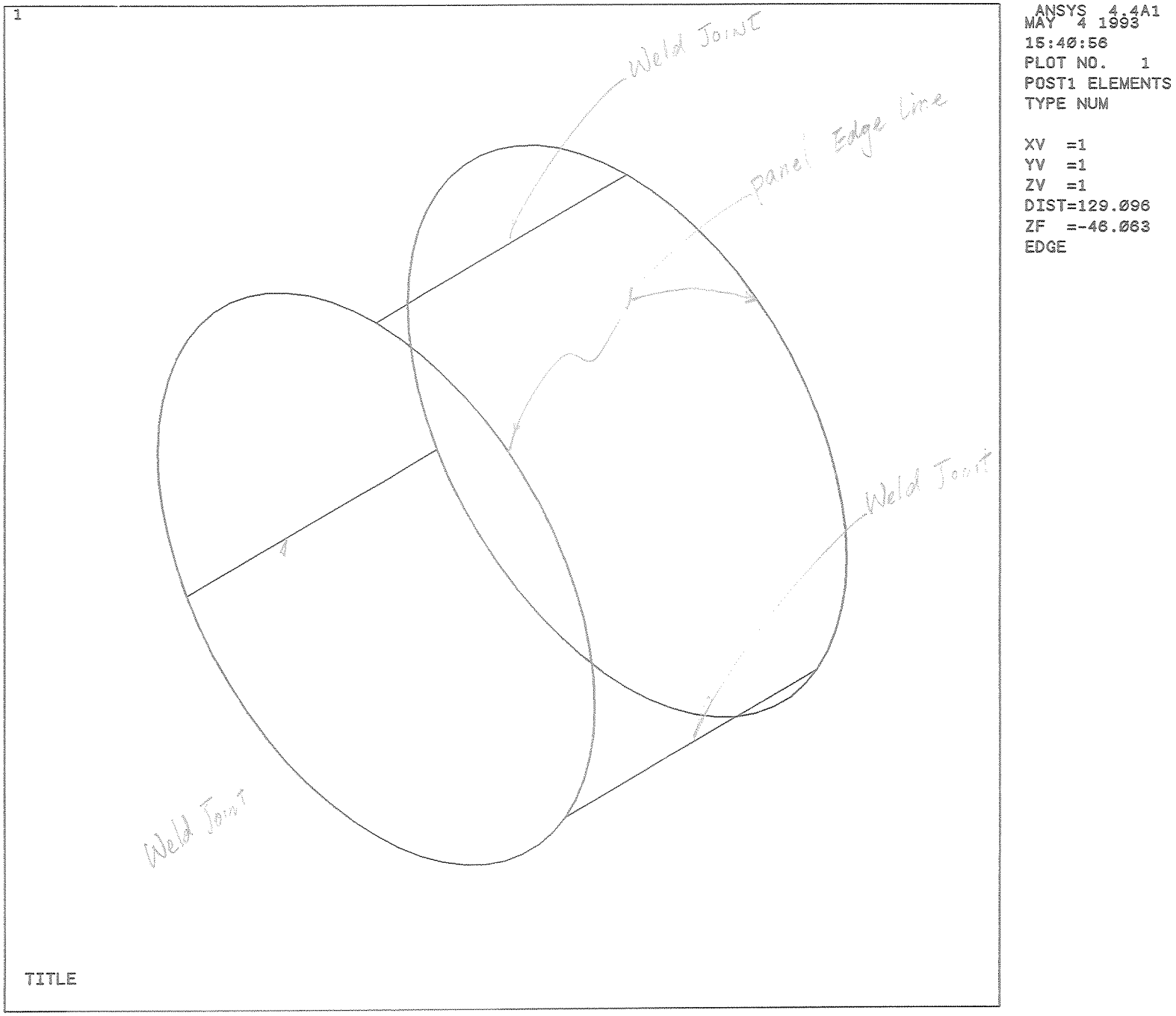

Figure 3-1. Structure configuration for three panels and weld joints.

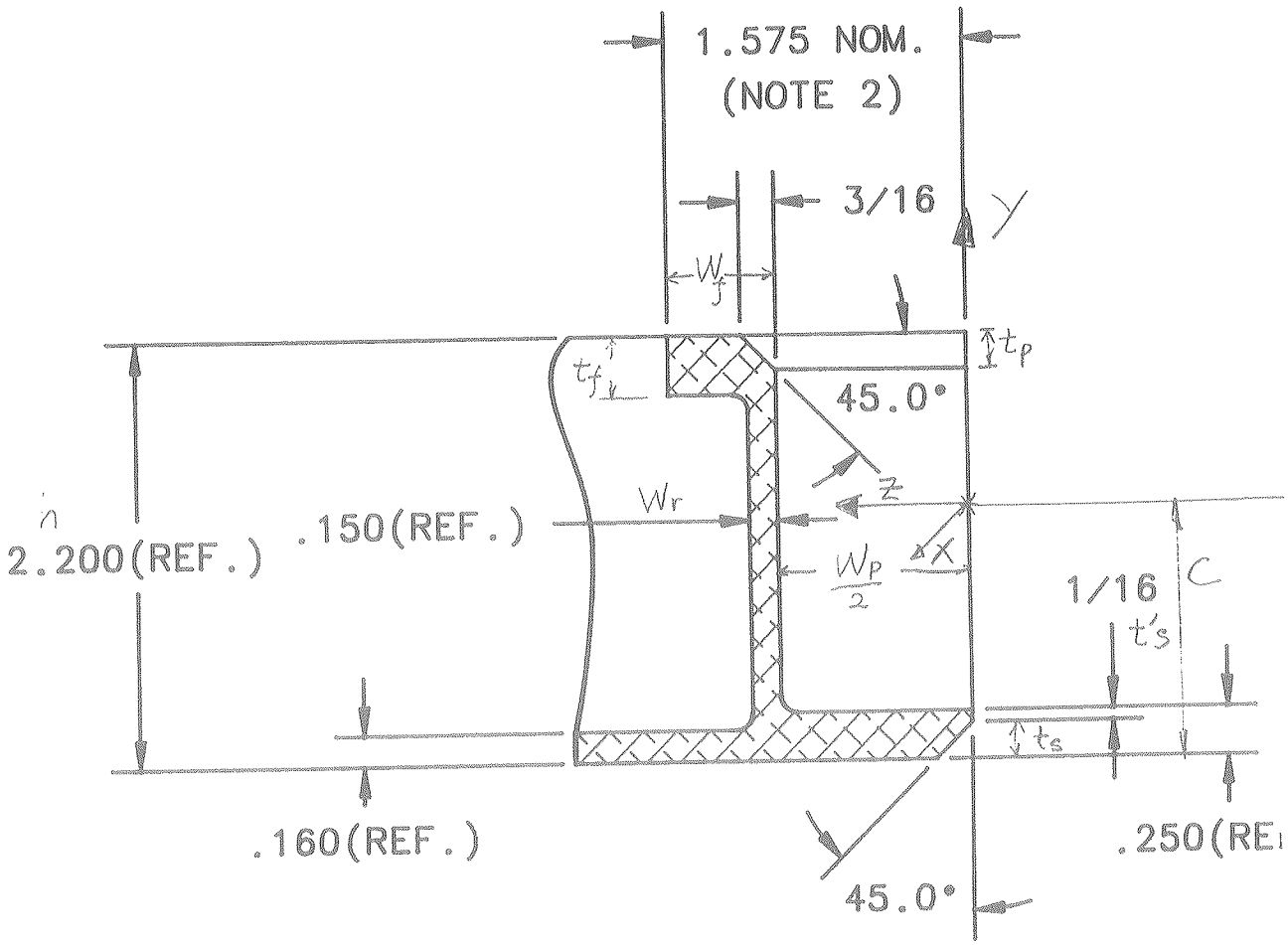

Figure 3-2 Geometry of panel joint section.

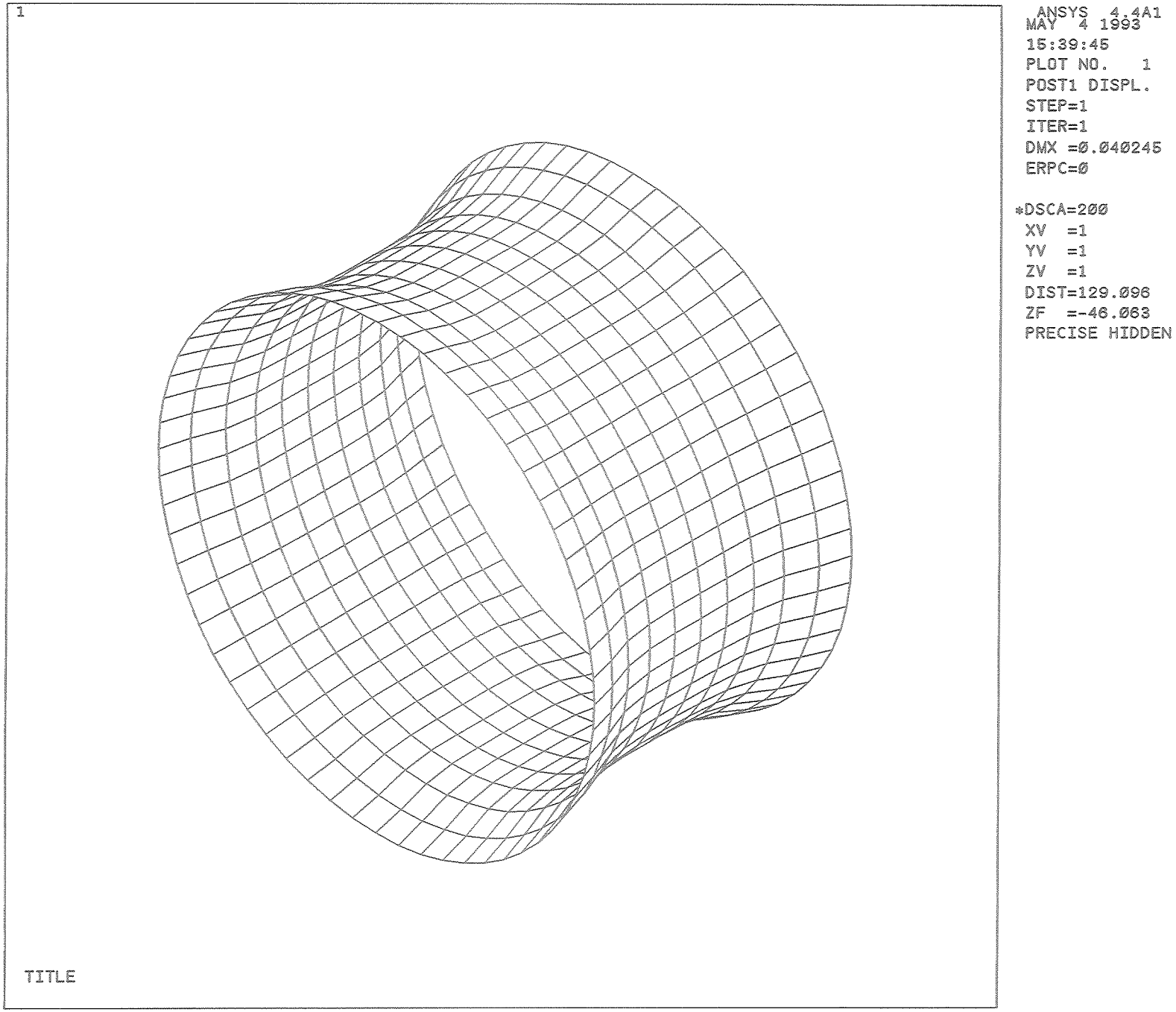

Figure 3-3 Deflection of shell structure.

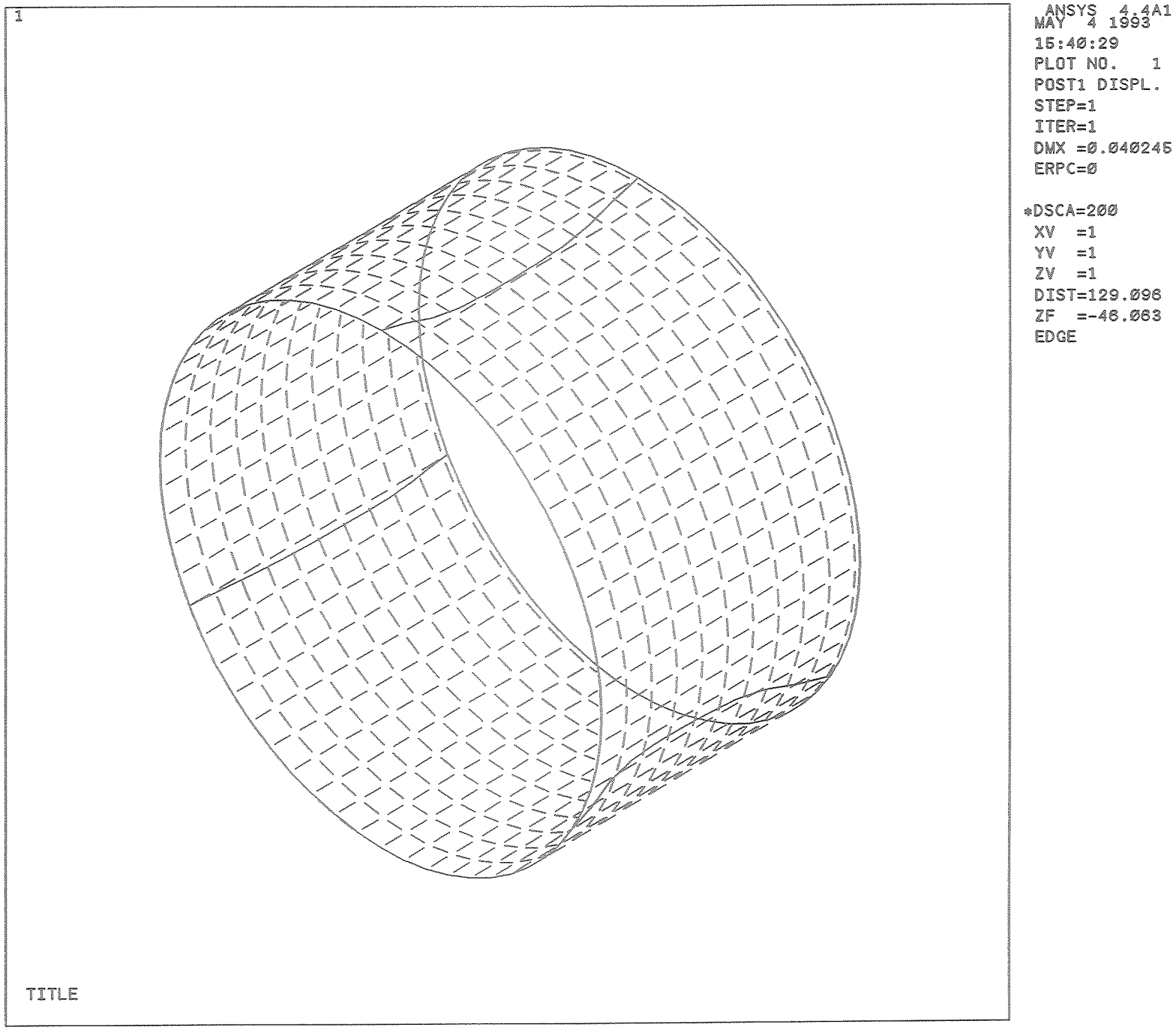

Figure 3-4 Deflection of the panel weld joint.

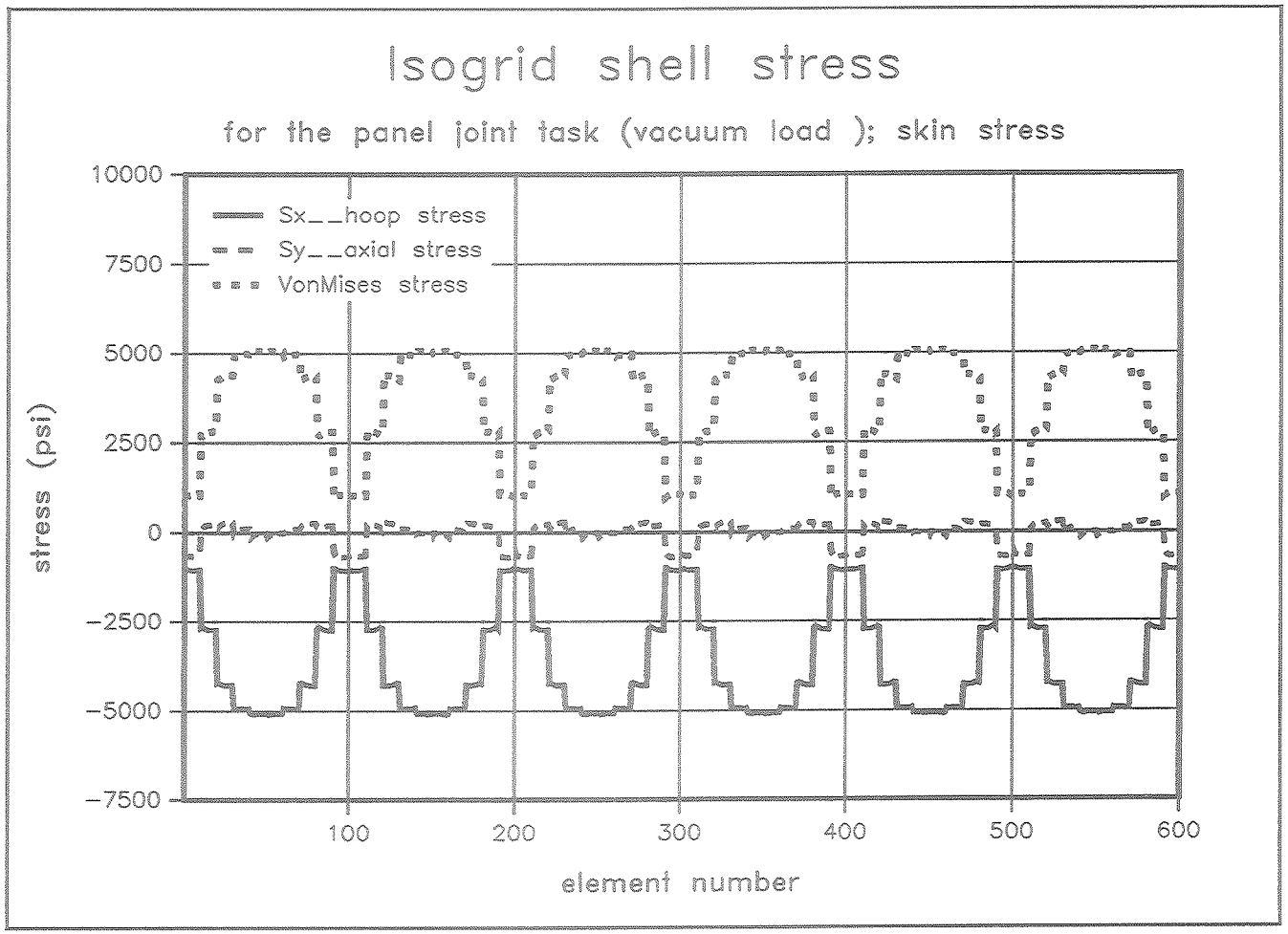

Figure 3-5 Skin stress of the isogrid shell.

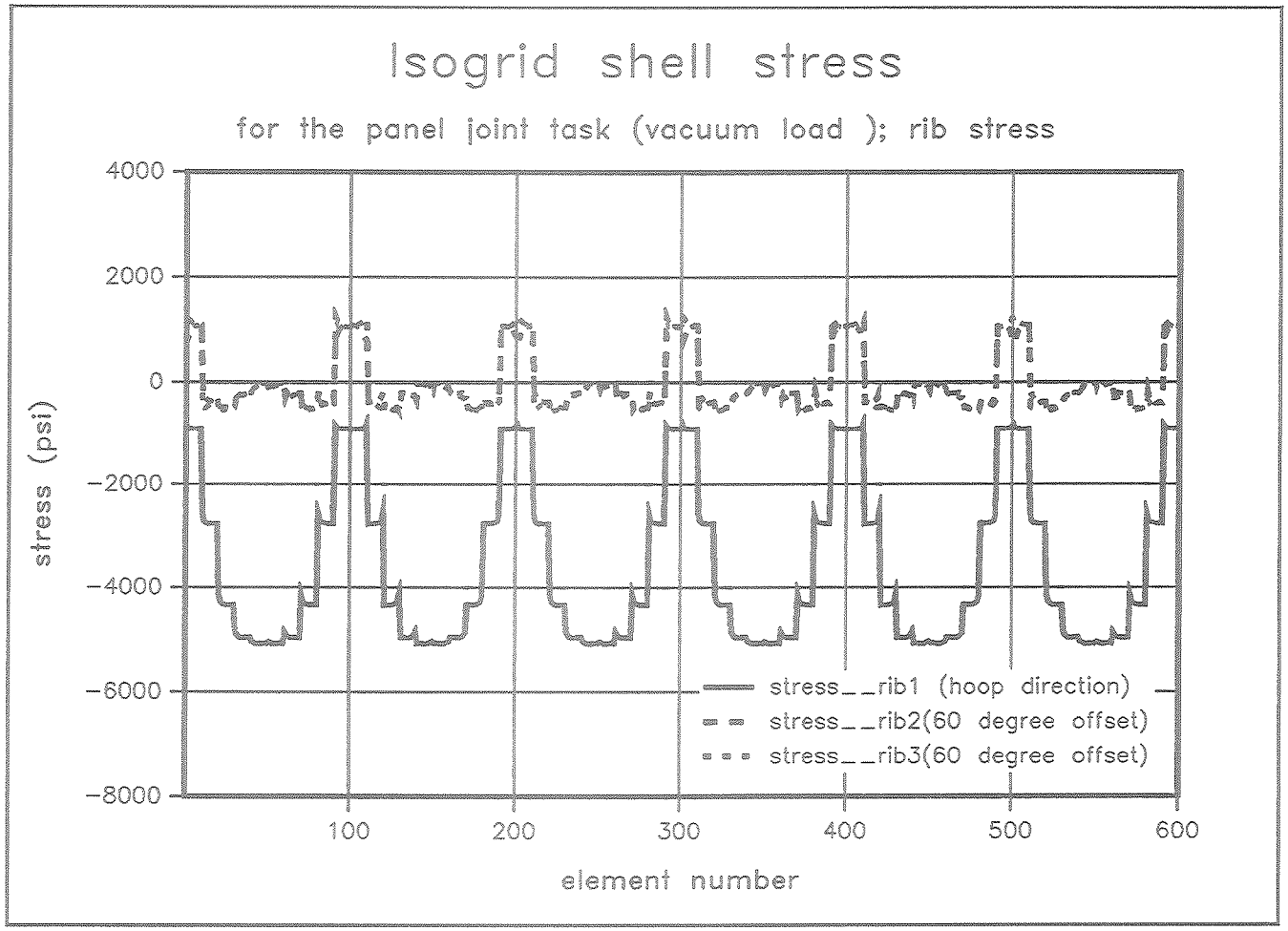

Figure 3-6 Rib stress of the isogrid shell.

References:

1). L.W. Swenson, Jr, " Buckling and Stress Analysis of the SDC (Isogrid)Vacuum Shell"(Task 1), SDC Solenoid Design Note # 154, Fermilab, Aug 30, 1991

2). L.W. Swenson, Jr, " Stress Analysis of the SDC Vacuum Shell and Vertical Chimney Penetration"(Task 2), SDC Solenoid Design Note # 157, Fermilab, September 6, 1991

3). L.W. Swenson, Jr, " Stress Analysis of the SDC Vacum Shell and Panel Weld Joints", SDC Solenoid Design Note # 158, Fermilab, September 11, 1991

4). CGA-341 " Standard for Insulated Cargo Tank Specification For Cryogenic Liquids", Compress Gas Association, Third Edition, 1987

5) ASME Boil and Pressure Vessel Code, Section Vlll, Div. 2, Appendix 4, 1989

Appendix:

A) Spread sheet for dimensions and material property of prototype vessel

B) Calculation of isogrid dimensionless parameters and section parameters

C) Stress Calculation for isogrid shell from reference 1

D) Section parameters and stress calculation for panel joint

A) Spread sheet for dimensions and material property of prototype vessel

ATTACHMENT

Table A-1 Materials for Prototype Vessel

Parameter	Outer shell	Inner shell	Inner shell flanges	Bulkheads	Ref.	Nozzle, nozzle flange, blind flange	Ref.
Alloy	5083-H321	5083-0	5083-H112	5083-H112		6061-T6 (all)	
Vendor	Alcoa	Ryerson	Ryerson	Ryerson	1	Fermilab	na
Supplier	Alcoa	Alcoa	Alcoa	Alcoa, Reynolds	2	na	
Young's molulus, Msi (GPa)	10.3 (71.0)	10.3 (71.0)	10.3 (71.0)	10.3 (71.0)	3	10.0 (68.95)	3
Poisson's ratio	0.33	0.33	0.33	0.33	na	0.33	na
Weight density lb/in2 (kg/m3)	0.096 (2657)	0.096 (2657)	0.096 (2657)	0.096 (2657)	4	0.098 (2713)	4
Min. tensile ultimate strength, ksi (MPa)	44.9 (309.6)	44.0 (303.4)	43.7 (301.3)	43.7 (301.3)	2	24.0 (165.5)	3
Min. tensile yield strength, ksi (MPa)	34.3 (236.5)	25.4 (175.1)	21.2 (146.2)	21.2 (146.2)	2	16.0 (110.3)	3
Allowable stress, ksi (MPa)	10.0 (69.0)	10.0 (69.0)	9.8 (76.6)	9.8 (76.6)	3	6.0 (41.4)	3
Note: All properties are at room temperature.							
References:							
1. Purchase Order							
2. Certified Inspection Report							
3. ASME Pressure Vessel Code, Section II, Part D (1992)							
4. Aluminum Standards and Data, Aluminum Association of America (1990)							

Table A-2 Geometry of Prototype Vacuum Vessel

a. Outer (isogrid) vacuum shell

Fermilab drawing number	SSC-SDD-000375 and 376
Outer shell material	5083-H321
Outer shell outer diameter	162.2 in (4120 mm)
Outer shell length	92.126 in (2340 mm)
Estimated weight	2100 lb (955 kg)

b. Inner vacuum shell

Fermilab drawing number	SSC-SDD-000381
Inner shell material	5083-0
Inner shell inner diameter	133.9 in (3400 mm)
Inner shell length	92.126 in (2340 mm)
Inner shell thickness	0.25 in (6.3 mm)
Estimated weight, including flanges	1250 lb (568kg)

c. Bulkheads

Fermilab drawing number	SSC-SDD-000382
Bulkhead material	5083-H112
Bulkhead outer radius	81.102 in (2060 mm)
Bulkhead inner radius	66.929 in (1700 mm)
Thickness	1.22 in (31 mm)
Estimated weight for two, w/o holes	1600 lb (727 kg)

d. Chimney nozzle assembly

Fermilab drawing number	SSC-SDD-000372
Nozzle pipe material	6061-T6
Nozzle flange material	6061-T6
Blind flange material	6061-T6
Nozzle pipe outer diameter	12.75 in (323.8 mm)
Nozzle pipe wall thickness	0.180 in (4.6 mm)
Nozzle flange thickness	0.875 in (22.2 mm)
Blind flange thickness	0.75 in (19.0 mm)
Weight of assembly	25 lb (11.4 kg)

e. Inner vessel fixture

Amro drawing number	
Estimated weight	1000 lb (455 kg)

f. Total weight rounded up to nearest 100 lb

Estimated weight of vessel	5000 lb (2273 kg)
Weight of vessel with fixture	6000 lb (2727 kg)
Internal (cold) mass	13200 lb (6000 kg)

Table A-3 Isogrid Geometry

a. Regular pattern

Fermilab drawing number		SSC-SDD-000365
Node spacing	a	7.092 in (180.1 mm)
Web width	b	0.150 in (3.81 mm)
Flange depth	c	0.310 in (7.87 mm)
Web depth	d	1.730 in (43.94 mm)
Triangle height	$h=a\sqrt{3}/2$	6.1419 in (156.0 mm)
Flange width	w	1.000 in (25.4 mm)
Skin thickness	t	0.160 in (4.06 mm)

b. Nozzle reinforcement pattern

Fermilab drawing number	SSC-SDD000413 Sh 2 of 4

c. Panel joint pattern

Fermilab drawing numbers	SSC-SDD-000365, -000375

B) Calculation of isogrid dimensionless parameters and section parameters

Appendix B:

Calculation of Isogrid dimensionless parameters and section parameters (Ref 1)

$a = 7.092''$

$b = 0.15''$

$c = 0.31''$

$d = 1.73''$

$w = 1''$

$t = 0.16''$

$$\alpha = \frac{b \cdot d}{h \cdot t} = 0.2641$$

$$\beta = 27.82749$$

$$\delta = \frac{d}{t} = 10.8125$$

$$\eta = \frac{e}{t} = 1.9875$$

$$\mu = \frac{w \cdot e}{h \cdot t} = 0.3155$$

$$t^* = t\frac{\beta}{1+\alpha+\mu} = 2.818''$$

$$E^* = E\frac{(1+\alpha+\mu)}{\beta} = 9.235\times10^5 \text{ psi}$$

$$A = t(1+\alpha+\mu)$$

$$= 0.16\,(1+0.2641+0.3155)$$

$$= 0.2527$$

$$Z_{bar} = t + \frac{d}{2} + \frac{t\,(1+\delta-\mu(\delta+\lambda))}{2\,(1+\alpha+\mu)}$$

$$= 0.6305$$

$$C_f = t + d + c - Z_{bar}$$

$$= 0.16 + 1.73 + 0.31 - 0.6305$$

$$= 1.5695$$

$$C_s = -Z_{bar} = -0.6305$$

$$I = \frac{t^3 \beta^2}{12}(1 + \alpha + \mu)$$

$$= \frac{0.16^3 \times 27.82749}{12}(1 + 0.264 + 0.255)$$

$$= 0.4175$$

$$D = \frac{9}{8} EI = \frac{9}{8} \times 10.3 \times 10^6 \times 0.4175$$

$$= 4.83778 \times 10^6$$

$$K = \frac{9}{8} EA = \frac{9}{8} \times 10.3 \times 10^6 \times 0.2527$$

$$= 2.92816$$

C) Stress Calculation for isogrid shell from reference 1

```
nums=1
numf=600
c********
:lp1
*get,nnx,tx,nums
*get,nny,ty,nums
*get,nnxy,txy,nums
*get,mmx,mx,nums
*get,mmy,my,nums
*get,mmxy,mxy,nums
nnxy=nnxy
mmxy=mmxy
c**********************
d=4.83778e6
i=0.4175
k=2.92816e6
cf=1.5695
cs=0.6305
a=0.2527
c*************
c*************
sx=(Nnx/a)+(cs*mmx/i)
sy=(nny/a)+(cs*mmy/i)
sxy=(-nnxy/a)+(cs*mmxy/i)
sss1=(sx+sy)/2
sss2=((sx-sy)/2)**2
sss2=(sss2+(sxy*sxy))**0.5
s1=sss1+sss2
s2=sss1-sss2
se=((s1*s1)+(s2*s2)-(2*0.333*s1*s2))**0.5
rib1=(nnx/a)-(nny/(3*a))-((cf/i)*(mmx-(mmy/3)))
rib2=(((2*nny/3)-(1.155*nnxy))/a)-((cf/i)*((2*mmy/3)+(1.155*mmxy)))
rib3=(((2*nny/3)+(1.155*nnxy))/a)-((cf/i)*((2*mmy/3)-(1.155*mmxy)))
c************
c************
/out,14
elem=nums
sx=sx
sy=sy
sxy=sxy
s1=s1
s2=s2
se=se
rib1=rib1
rib2=rib2
rib3=rib3
c**************
/out,6
nums=nums+1
*if,nums,le,numf,:lp1
```

D) Section parameters and stress calculation for panel joint

$A = 1.8007 \ in^2$

$C^* = 1.178 \ in$

$I_z = 1.3527 \ in^4$

$I_y = 1.5527 \ in^4$

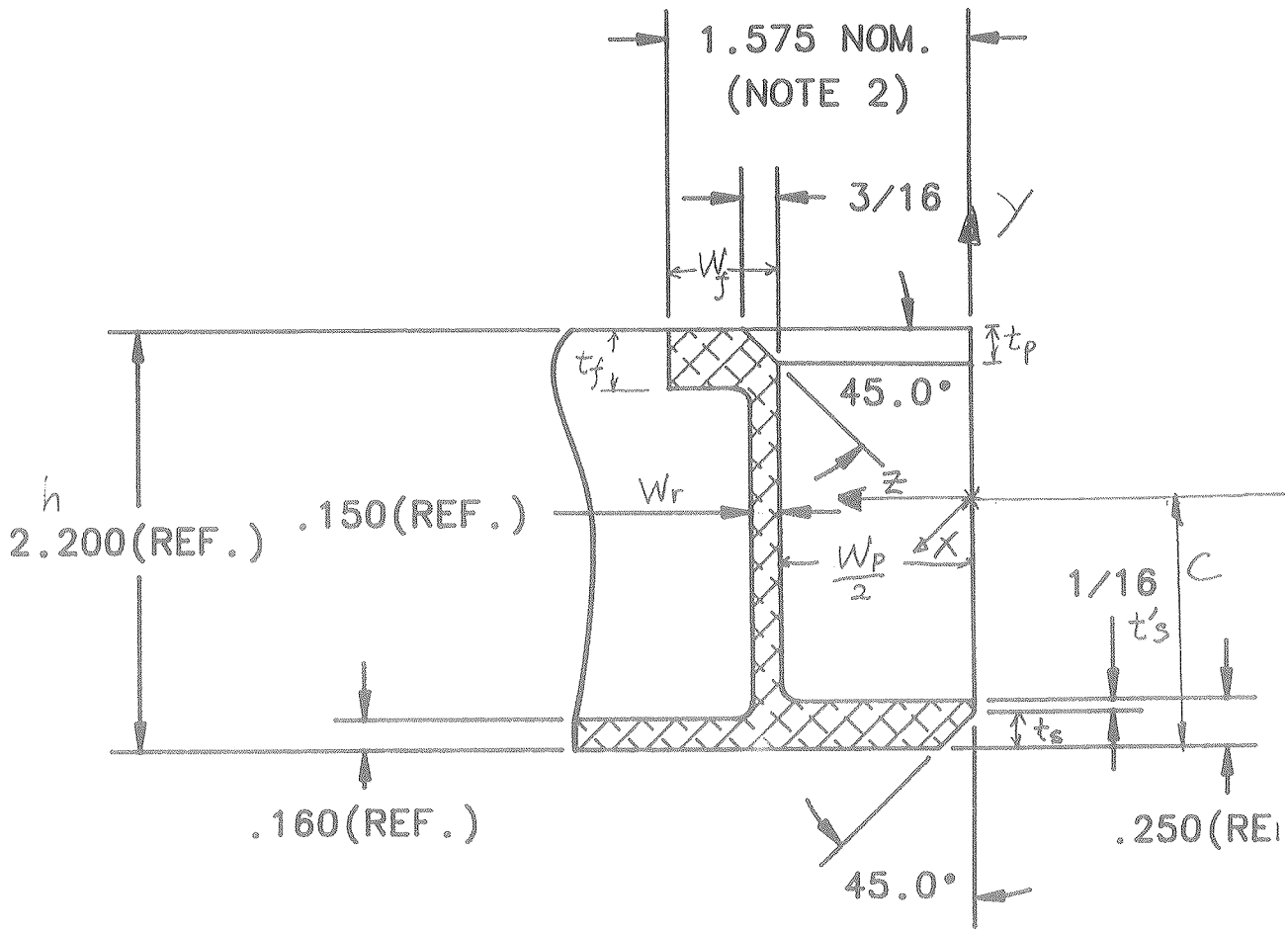
1.575 NOM.
(NOTE 2)
3/16
Y
W_f
t_p
t_f
45.0°
Z
W_r
h
2.200(REF.)
.150(REF.)
$\frac{W_p}{2}$
X
1/16
C
t'_s
t_s
.160(REF.)
.250(REF
45.0°

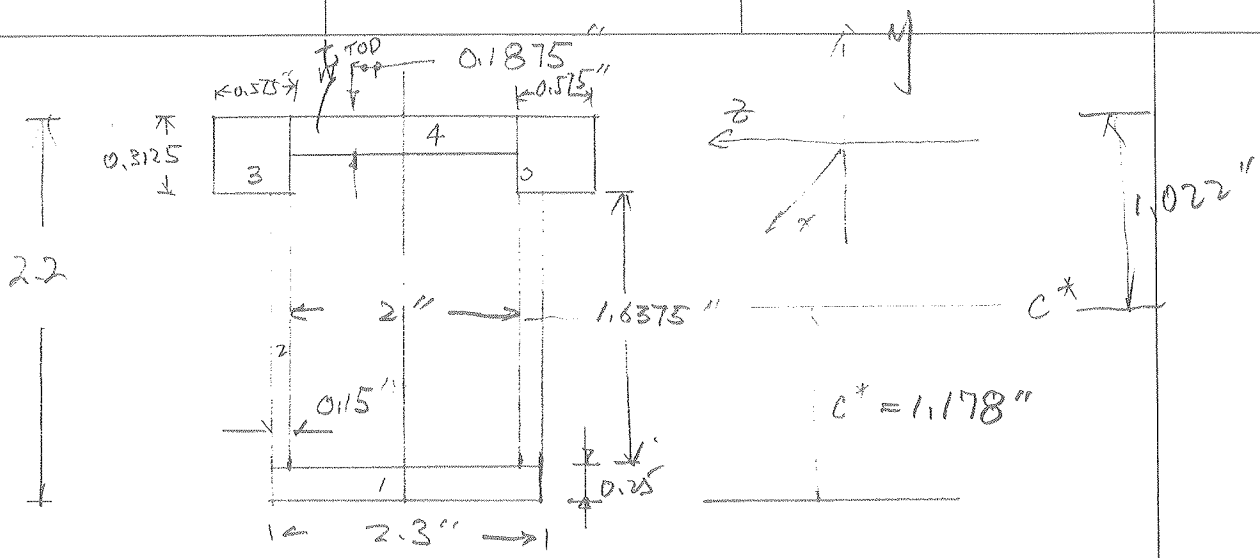

$$A = A_1 + A_2 + A_3 + A_4.$$

$$A_1 = 2.3'' \times 0.25'' = 0.575 \ (in^2)$$

$$A_2 = 2 \times (0.15'' \times 1.6375'') = 0.49125 \ (in)^2$$

$$A_3 = 0.575'' \times 0.3125 \times 2 = 0.3594 \ (in)^2$$

$$A_4 = 0.1875'' \times 2 = 0.375 \ (in)^2$$

$$A_T = 0.575 + 0.49125 + 0.3594 + 0.375$$

$$= 1.8007 \ in$$

centroid C^*

$$C^* A_T = A_1 \cdot C_1 + A_2 \cdot C_2 + A_3 \cdot C_3 + A_4 \cdot C_4$$

$$C^* = \frac{A_1 \cdot C_1 + A_2 C_2 + A_3 C_3 + A_4 C_4}{A_T}$$

$$= \Big[2.3 \times 0.125 \times \left(\frac{0.25}{2}\right) + 2 \times (0.115'' \times 1.6375'') \times \left(\frac{1.6375}{2} + 0.25\right)$$

$$+ 2 \times 0.575 \times 0.3125 \times \left(2.2 - \frac{0.3125}{2}\right)$$

$$+ 0.1875 \times 2 \times \left(2.2 - \frac{0.1875}{2}\right) \Big] \Big/ 1.8007$$

$$= \frac{0.07875 + 0.5250 + 0.7345 + 0.7898}{1.8007}$$

$$= 1.178''$$

Inertial Moment for I_z and I_y.

$$I_z = I_{z1} + I_{z2} + I_{z3} + I_{z4}.$$

$$I_{z1} = \frac{0.25^3 \times 2.3}{12} + 0.25 \times 2.3 \times \left(1.178 - \frac{0.25}{2}\right)^2$$

$$= 2.995 \; 10^{-3} + 0.63757$$

$$= 0.6406 \; in^4$$

$$I_{z2} = 2\left[\frac{(0.15 \times 1.6375^3)}{12} + (0.15 \times 1.6375) \times (1.178 - 1.06875)^2\right]$$

$$= 2 \times \left[0.054885 + 2.93167 \times 10^{-3}\right]$$

$$= 0.1156 \; in^4.$$

$$I_{z3} = 2 \times \left(\frac{0.575 \times 0.3125^3}{12} + 0.575 \times 0.3125 \times \left(1.022'' - \frac{0.3125}{2}\right)^2\right)$$

$$= 2 \times \left[1.4623 \times 10^{-3} + 0.1347\right]$$

$$= 0.2723 \; in^4$$

$$I_{z4} = \frac{0.1875^3 \times 2}{12} + \left(1.022'' - \frac{0.1875}{2}\right)^2 \times 0.1875 \times 2$$

$$= 1.0986 \times 10^{-3} + 0.3232$$

$$= 0.3242 \text{ in}^4$$

$$I_z = I_{z1} + I_{z2} + I_{z3} + I_{z4}$$

$$= 0.6406 + 0.1156 + 0.2723 + 0.3242$$

$$= 1.3527 \text{ in}^4.$$

Inertial Moment for I_y

$$I_y = I_{y1} + I_{y2} + I_{y3} + I_{y4}$$

$$I_{y1} = \frac{2.3^3 \times 0.25}{12} = 0.2535 \text{ in}^4.$$

$$I_{y2} = \frac{1.6325}{12}(2.3^3 - 2^3) = 0.5686.$$

$$I_{y3} = \frac{0.3125}{12}(3.15^3 - 2^3) = 0.6056.$$

$$I_{y4} = \frac{0.1875}{12} \cdot 2^3 = 0.125$$

$$I_y = 0.2535 + 0.5686 + 0.6056 + 0.125$$

$$= 1.5527 \text{ in}^4$$

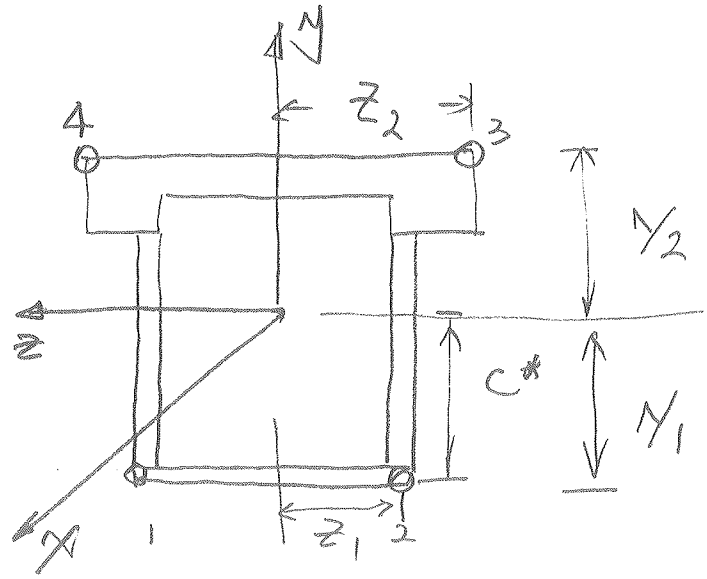

Stress at Four Corner:

$$\sigma_1 = \frac{F_x}{A} + \frac{M_z * y_1}{I_{zz}} + \frac{M_y * z_1}{I_{yy}}$$

$$\sigma_2 = \frac{F_x}{A} + \frac{M_z * y_1}{I_{zz}} - \frac{M_y * z_1}{I_{yy}}$$

$$\sigma_3 = \frac{F_x}{A} - \frac{M_z * y_2}{I_{zz}} - \frac{M_y * z_2}{I_{yy}}$$

$$\sigma_4 = \frac{F_x}{A} - \frac{M_z * y_2}{I_{zz}} + \frac{M_y z_2}{I_{yy}}$$

The section parameters given above are computed as follows:

$$
\begin{aligned}
A &= t\,(1 + \alpha + \mu) \\
Cf &= t + d + c - z_{bar} \\
Cs &= -z_{bar} \\
E^* &= E\,(1 + \alpha + \mu)^2/\beta \\
I &= t^3\,\beta^2/12(1 + \alpha + \mu) \\
D &= 9/8\,E\,I \\
K &= 9/8\,E\,A \\
t_{eff} &= A \\
t^* &= t\,\beta/(1 + \alpha + \mu) \\
t_{bar} &= t\,(1 + 3\alpha + 3\mu) \\
z_{bar} &= t + d/2 - t\,[1 + \delta - \mu\,(\delta+\tau)]/2(1 + \alpha + \mu)
\end{aligned}
\tag{1}
$$

From shell theory, the force and moment stress resultants are given by the following equations (note that for aluminum Isogrid, Poisson's ratio equals 1/3):

$$
\begin{Bmatrix} N_x \\ N_y \\ N_{xy} \end{Bmatrix} = K \begin{bmatrix} 1 & 1/3 & 0 \\ 1/3 & 1 & 0 \\ 0 & 0 & -1/3 \end{bmatrix} \begin{Bmatrix} \varepsilon_x^o \\ \varepsilon_y^o \\ \gamma_{xy}^o \end{Bmatrix}
\tag{2}
$$

and

$$
\begin{Bmatrix} M_x \\ M_y \\ M_{xy} \end{Bmatrix} = -D \begin{bmatrix} 1 & 1/3 & 0 \\ 1/3 & 1 & 0 \\ 0 & 0 & 1/3 \end{bmatrix} \begin{Bmatrix} \chi_x \\ \chi_y \\ 2\chi_{xy} \end{Bmatrix}
\tag{3}
$$

respectively. In these equations, ε^o and X are the centroidal axis strains and curvatures, respectively.

The shell strains at a distance z from the reference surface are given by:

$$
\begin{Bmatrix} \varepsilon_x \\ \varepsilon_y \\ \gamma_{xy} \end{Bmatrix} = \begin{Bmatrix} \varepsilon_x^o \\ \varepsilon_y^o \\ \gamma_{xy}^o \end{Bmatrix} - z \begin{Bmatrix} \chi_x \\ \chi_y \\ 2\chi_{xy} \end{Bmatrix}
\tag{4}
$$

If equations (1) and (2) are inverted,

$$\begin{Bmatrix} \varepsilon_x^0 \\ \varepsilon_y^0 \\ \gamma_{xy}^0 \end{Bmatrix} = \frac{9}{8K} \begin{bmatrix} 1 & -1/3 & 0 \\ -1/3 & 1 & 0 \\ 0 & 0 & -8/3 \end{bmatrix} \begin{Bmatrix} N_x \\ N_y \\ N_{xy} \end{Bmatrix} \tag{5}$$

and

$$\begin{Bmatrix} \chi_x \\ \chi_y \\ 2\chi_{xy} \end{Bmatrix} = \frac{-9}{8D} \begin{bmatrix} 1 & -1/3 & 0 \\ -1/3 & 1 & 0 \\ 0 & 0 & 8/3 \end{bmatrix} \begin{Bmatrix} M_x \\ M_y \\ M_{xy} \end{Bmatrix} \tag{6}$$

and substituted into equation (3), the shell strains can be written as:

$$\begin{Bmatrix} \varepsilon_x \\ \varepsilon_y \\ \gamma_{xy} \end{Bmatrix} = \frac{9}{8K} \begin{bmatrix} 1 & -1/3 & 0 \\ -1/3 & 1 & 0 \\ 0 & 0 & -8/3 \end{bmatrix} \begin{Bmatrix} N_x \\ N_y \\ N_{xy} \end{Bmatrix} + \frac{9z}{8D} \begin{bmatrix} 1 & -1/3 & 0 \\ -1/3 & 1 & 0 \\ 0 & 0 & 8/3 \end{bmatrix} \begin{Bmatrix} M_x \\ M_y \\ M_{xy} \end{Bmatrix} \tag{7}$$

or,

$$\begin{Bmatrix} \varepsilon_x \\ \varepsilon_y \\ \gamma_{xy} \end{Bmatrix} = \frac{1}{EA} \begin{bmatrix} 1 & -1/3 & 0 \\ -1/3 & 1 & 0 \\ 0 & 0 & -8/3 \end{bmatrix} \begin{Bmatrix} N_x \\ N_y \\ N_{xy} \end{Bmatrix} + \frac{z}{EI} \begin{bmatrix} 1 & -1/3 & 0 \\ -1/3 & 1 & 0 \\ 0 & 0 & 8/3 \end{bmatrix} \begin{Bmatrix} M_x \\ M_y \\ M_{xy} \end{Bmatrix} \tag{8}$$

Use of the definitions of A and I were made in equation (8).

Isogrid Skin Stresses

Isogrid skin stresses are computed using the constitutive relations for plane stress:

$$\begin{Bmatrix} \sigma_x \\ \sigma_y \\ \sigma_{xy} \end{Bmatrix} = \frac{9E}{8} \begin{bmatrix} 1 & 1/3 & 0 \\ 1/3 & 1 & 0 \\ 0 & 0 & 1/3 \end{bmatrix} \begin{Bmatrix} \varepsilon_x \\ \varepsilon_y \\ \gamma_{xy} \end{Bmatrix} \tag{9}$$

If the shell strains in equation (8) are substituted into equation (9), and the extreme shell fiber z = Cs is identified, then the skin stresses are given by:

$$\begin{Bmatrix} \sigma_x \\ \sigma_y \\ \sigma_{xy} \end{Bmatrix} = \frac{1}{A} \begin{Bmatrix} N_x \\ N_y \\ -N_{xy} \end{Bmatrix} + \frac{C_s}{I} \begin{Bmatrix} M_x \\ M_y \\ M_{xy} \end{Bmatrix} \tag{10}$$

Isogrid Rib Stresses

Isogrid rib stresses can be computed for strains as follows [5]:

$$\begin{Bmatrix} \sigma_1 \\ \sigma_2 \\ \sigma_3 \end{Bmatrix} = \frac{E}{4} \begin{bmatrix} 4 & 0 & 0 \\ 1 & 3 & \sqrt{3} \\ 1 & 3 & -\sqrt{3} \end{bmatrix} \begin{Bmatrix} \varepsilon_x \\ \varepsilon_y \\ \gamma_{xy} \end{Bmatrix} \tag{11}$$

If the shell strains in equation (8) are substituted into equation (11), and the extreme rib fiber z = -Cf is identified, then the rib stresses are given by:

$$\begin{Bmatrix} \sigma_1 \\ \sigma_2 \\ \sigma_3 \end{Bmatrix} = \frac{1}{A} \begin{bmatrix} 1 & -1/3 & 0 \\ 0 & 2/3 & -2/\sqrt{3} \\ 0 & 2/3 & 2/\sqrt{3} \end{bmatrix} \begin{Bmatrix} N_x \\ N_y \\ N_{xy} \end{Bmatrix} - \frac{C_f}{I} \begin{bmatrix} 1 & -1/3 & 0 \\ 0 & 2/3 & 2/\sqrt{3} \\ 0 & 2/3 & -2/\sqrt{3} \end{bmatrix} \begin{Bmatrix} M_x \\ M_y \\ M_{xy} \end{Bmatrix} \tag{12}$$

Subscripts on the rib stresses are indicated in Figure A.2.