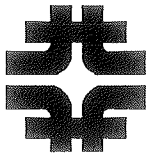

Fermilab

# SDC SOLENOID DESIGN NOTE #195

TITLE: Status of Cryogenic Design Study at KEK

AUTHOR: Y. Doi (KEK)

DATE: Dec. 10, 1992

---

This design note is one of a series which represents the proceedings of the SDC solenoid subgroup meeting held in Japan on December 8-11, 1992. The plan and purpose of the meeting was to:

- Look at the prototype coil winding and honeycomb vessel R&D in Japan
- Reports of technical progress from each group
- Plan and schedule for the prototype magnet assembly and test
- Discussions on design of the SDC solenoid power supply
- **Discussions on cryogenic design for the SDC solenoid**
- Discussions on responsibilities for the cryogenics fabrication
- Response to the report of the DOE review sub-committee
- Publications and presentations of the technical progress

SDC Solenoid Subgroup Meeting in Japan

# Status of Cryogenic Design Study at KEK

Y. Doi (KEK)

Dec. 10, 1992

# Status of Cryogenic System Design at KEK

- Outline system flow diagram.
- Estimate of refrigeration load.
- Recovery times to steady state operation after quench.
- Main specifications of the cryogenic system.
- Magnet flow diagram, Part 1.

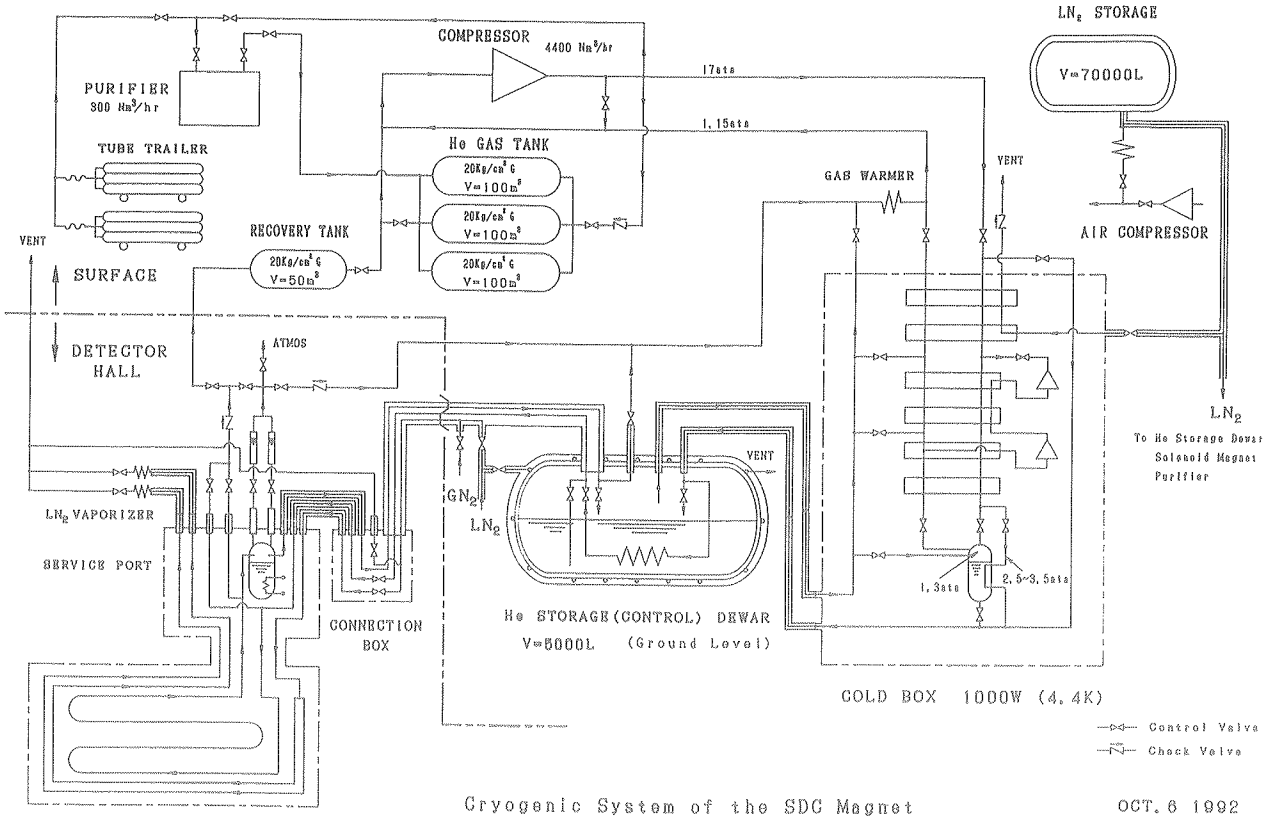


Cryogenic System of the SDC Magnet

option 1

OCT. 6 1992

KEK

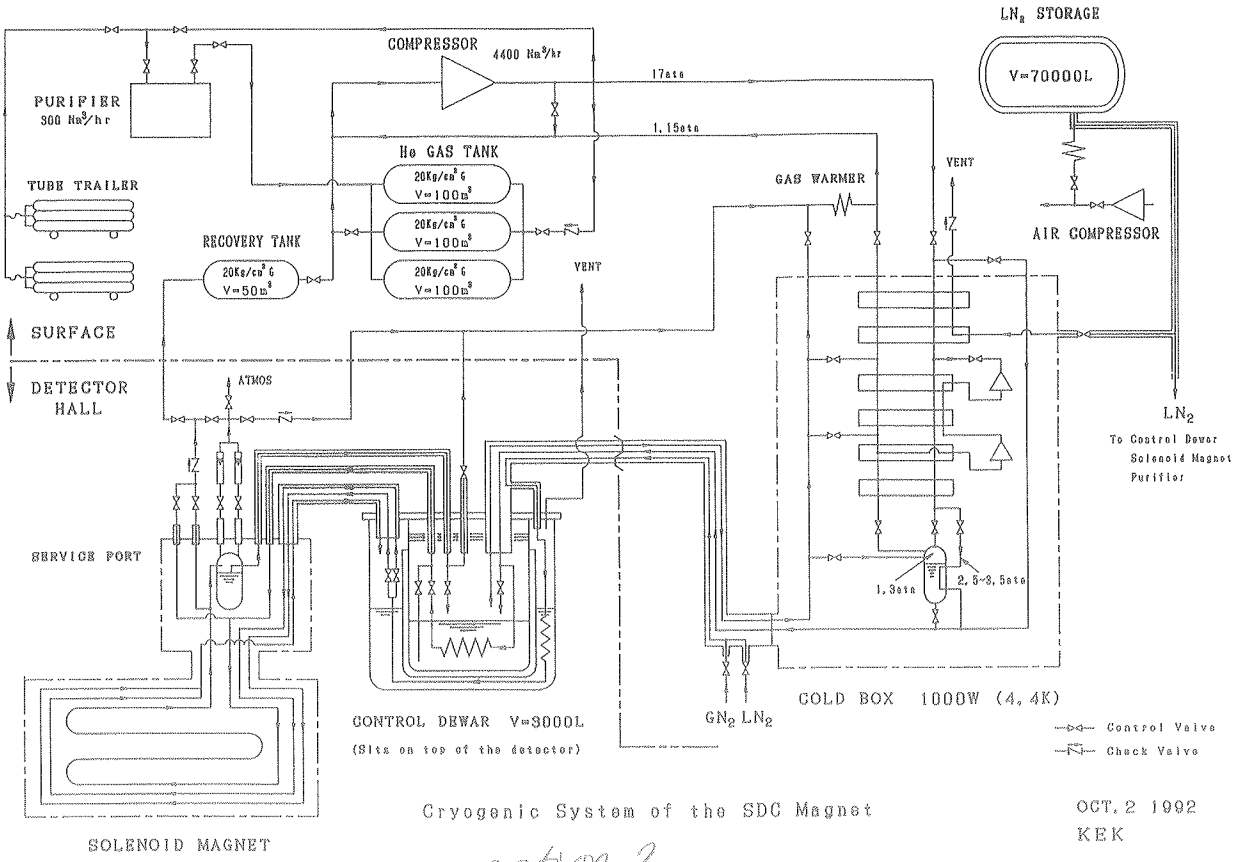


Cryogenic System of the SDC Magnet

option 2

OCT. 2 1992
KEK

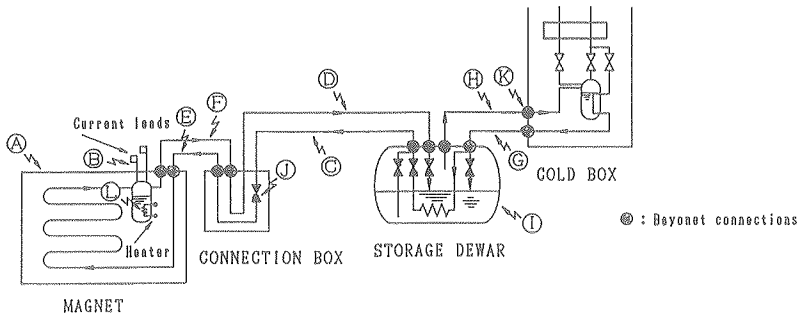


Estimate of refrigeration load for the SDC cryogenic system

| | Steady state operation | Note |
|---|---|---|
| (A) Steady load in magnet | 40W | |
| (B) Current leads | 90W(30L/hr) | 1L/hr=3W |
| (C) Transfer line (supply) | 5W | With $LN_2$ shield |
| (D) Transfer line (return) | 20W | With $LN_2$ shield |
| (E) Transfer line (supply) | 2.8W | 0.28W/mX10m(1B) |
| (F) Transfer line (return) | 3.7W | 0.37W/mX10m($1\frac{1}{2}$B) |
| (G) Transfer line (supply) | 7.4W | 0.37W/mX20m($1\frac{1}{2}$B) |
| (H) Transfer line (return) | 8.8W | 0.44W/mX20m(2B) |
| (I) Storage dewar | 3W | |
| (J) Control valves | 15W | 3WX5 valves |
| (K) Bayonet connections | 40W | 4WX10 sets |
| (L) Vaporizing heater | 70W | Flow rate=8 g/s |
| Total heat load | 305.7W | |

NOV. 25. 1992 KEK

# FACSIMILE MESSAGE

Ref.No.

宛先

高エネルギー物理学研究所
物理系

土井先生 殿

Fax. : 0298-64-2580

Date : 20 Nov 1992 | Page :


テイサン株式会社
播磨事業所
675-01
兵庫県加古郡播磨町新島16

☎ : 0794-37-2903
Fax. : 0794-37-0308
Telex : 5654515 TSHAR J
発信 : 機器事業本部
播磨システム開発部 山下直彦


SUBJECT : 侵入熱基準値の件

LHe用の標準的仕様として下記程度としております。

1) 配管直管部 (内管径) — Transfer tube straight section

| | | | |
|---|---|---|---|
| 1/2 B | 0.21 W/m | 2 B | 0.44 W/m |
| 3/4 B | 0.25 W/m | 2 1/2 B | 0.52 W/m |
| 1 B | 0.28 W/m | 3 B | 0.60 W/m |
| 1 1/2 B | 0.37 W/m | | |

2) 弁類 — Automatic control valve

Less than
3/4 B以下 : 2.5 W/ヶ
1 B以下 : 3 W/ヶ
2 B以下 : 4 W/ヶ

3) バイオネットジョイント — Bayonet Connection

Less than
1 B以下 : 2.5 W/組 (中圧系)
2 B以下 : 4 W/組 (低圧系)

B : Pipe Sizes 以上

## Transfer Line Heat Leak

The following per-foot heat leak values are representative of typical CVI piping installations. A total system heat leak is relative to all components collectively. Your system heat leak might average slightly less, but this would be indicated only by a thorough analysis.

CVI.

### Rigid Piping

Heat Leak: BTU/Hr.-Ft. = 0.961 W/m

| Inner Line Size | $LN_2$ | $LO_2$ | $LH_2$ | (W/m) |
|---|---|---|---|---|
| ¾" O.D. | 0.376 | 0.372 | 0.407 | = 0.39 |
| ¾" NPS | 0.433 | 0.427 | 0.462 | = 0.44 |
| 1" NPS | 0.479 | 0.472 | 0.515 | = 0.49 |
| 1½" NPS | 0.581 | 0.571 | 0.633 | = 0.61 |
| 2" NPS | 0.790 | 0.651 | 0.854 | = 0.82 |
| 3" NPS | 0.986 | 0.841 | 1.080 | = 1.03 |
| 4" NPS | 1.286 | 1.010 | 1.407 | = 1.35 |
| 6" NPS | 1.657 | 1.368 | 1.835 | = 1.76 |

(Tube Sizes)

### Flexible Piping

Heat Leak: BTU/Hr.-Ft.

| Inner Line Size | $LN_2$ | $LO_2$ | $LH_2$ | (W/m) |
|---|---|---|---|---|
| ½" Nom. I.D. | 0.977 | 0.967 | 1.058 | = 1.02 |
| ¾" Nom. I.D. | 1.212 | 1.195 | 1.293 | = 1.24 |
| 1" Nom. I.D. | 1.437 | 1.416 | 1.545 | = 1.48 |
| 1½" Nom. I.D. | 1.743 | 1.713 | 1.899 | = 1.82 |
| 2" Nom. I.D. | 2.370 | 1.953 | 2.562 | = 2.46 |

Each CVI transfer line system is fabricated, evacuated, tested and shipped in sections, or spools.

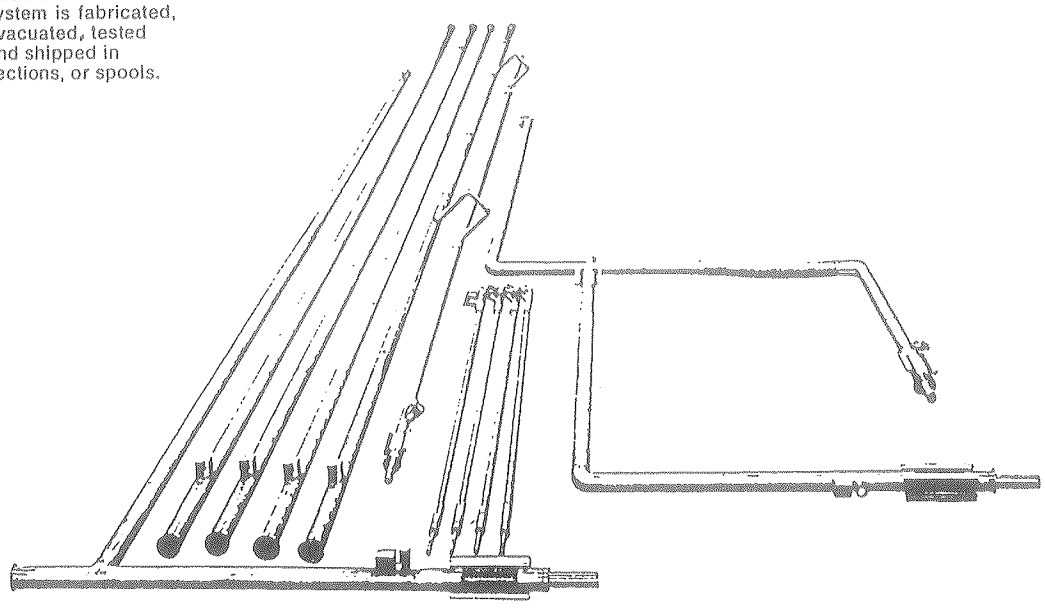

CVI

# V-1060, V-1070, V-1080

½" 4.6 W
¾" 4.6 W
1" 4.7 W
1½" 6.2 W
2" 8.1 W
3" 20.5 W
4" 25.3 W



## Performance data

| Calculated Cool-Down & Heat Leak Performance Information | | | | |
|---|---|---|---|---|
| Valve Size | Cool-Down Loss From Ambient to Cryogenic Temperature, in BTU. | | Steady-State Heat Leak From Ambient to Cryogenic Temp. BTU/HR | |
| | 80°K | 20°K | 80°K | 20°K |
| ½" | 117 | 123 | 13.8 | 15.7 |
| ¾" | 126 | 133 | 13.8 | 15.7 |
| 1" | 135 | 143 | 14.1 | 15.9 |
| 1½" | 270 | 285 | 18.9 | 21.2 |
| 2" | 396 | 418 | 24.6 | 27.6 |
| 3" | 1170 | 1235 | 63.6 | 69.8 |
| 4" | 1675 | 1765 | 78.8 | 86.2 |

| Size | $C_v$ Value* |
|---|---|
| ½" | 6 |
| ¾" | 8 |
| 1" | 14 |
| 1½" | 34 |
| 2" | 60 |
| 3" | 139 |
| 4" | 250 |

*These values are taken from actual tests conducted by a large Midwestern university.

| Total Weights and Cool-down Weights | | | |
|---|---|---|---|
| Valve Size | Unjacketed Total Weight | Jacketed Total Weight | Weight to Cool-down |
| ½" | 6.75# | 9.00# | 3.25# |
| ¾" | 6.75# | 9.00# | 3.50# |
| 1" | 7.25# | 11.25# | 3.75# |
| 1½" | 16.00# | 22.25# | 7.50# |
| 2" | 19.75# | 29.50# | 11.00# |
| 3" | 57.00# | 77.25# | 32.50# |
| 4" | 71.00# | 91.25# | 46.50# |

| Added weights for operated valves: | | |
|---|---|---|
| Sizes | Air Cylinder Operation | Positioner Operation |
| ½", ¾" & 1" | 9# | 13# |
| 1½" & 2" | 20# | 17# |
| 3" & 4" | 38# | 33# |

NOTE: Air cylinder or positioner operators do not affect cool-down weights of valves.

## Sizing the Valve for Your Application

By definition, $C_v$ for a valve is equal to the number of gallons per minute of water (specific gravity of 1.0) which will pass through the valve seat with a pressure drop of 1 psi.
Two relationships between $C_v$ and other pertinent flow parameters are as follows:

### Liquid Flow

$$C_v = \frac{Q_L\sqrt{G}}{\sqrt{\triangle P}} = \frac{7.2W_L}{\sqrt{G\triangle P}}$$

where:
$C_v$ = Valve Flow Coefficient
$\triangle P$ = Pressure Drop (psi)
$Q_L$ = Liquid Flow Rate (gpm)
$G$ = Specific Gravity = $\frac{\text{density of subject fluid}}{\text{density of water}}$
$W_L$ = Liquid Flow Rate (lbs/sec)

### Gaseous Flow

$$C_v = \left(\frac{\sqrt{T}}{22.8}\right)\frac{Q_g\sqrt{G}}{61\sqrt{P_2\triangle P}} = \frac{730\,W_g}{\sqrt{GP_2\triangle P}}\left(\frac{\sqrt{T}}{22.8}\right)$$

where:
$C_v$ = Valve Flow Coefficient
$\triangle P$ = Pressure Drop (psi)
$Q_g$ = Gaseous Flow Rate (scfh)
$G$ = Specific Gravity = $\frac{\text{density of subject gas at stp}}{\text{density of air}}$
$W_g$ = Gaseous Flow Rate (lbs/sec)
$P_2$ = Downstream absolute pressure (psia)
$T$ = Absolute Temperature (°R)
Note: When the pressure drop ($\triangle P$) is equal to or greater than ½ the absolute upstream pressure ($P_1$), substitute $\left(\frac{P_1}{2}\right)$ for $\sqrt{P_2\triangle 2}$

With these relationships, all factors except $C_v$ are known. The required $C_v$ value can be determined which, from the above table, will specify the required valve.

# Cryolab TECHNICAL DATA

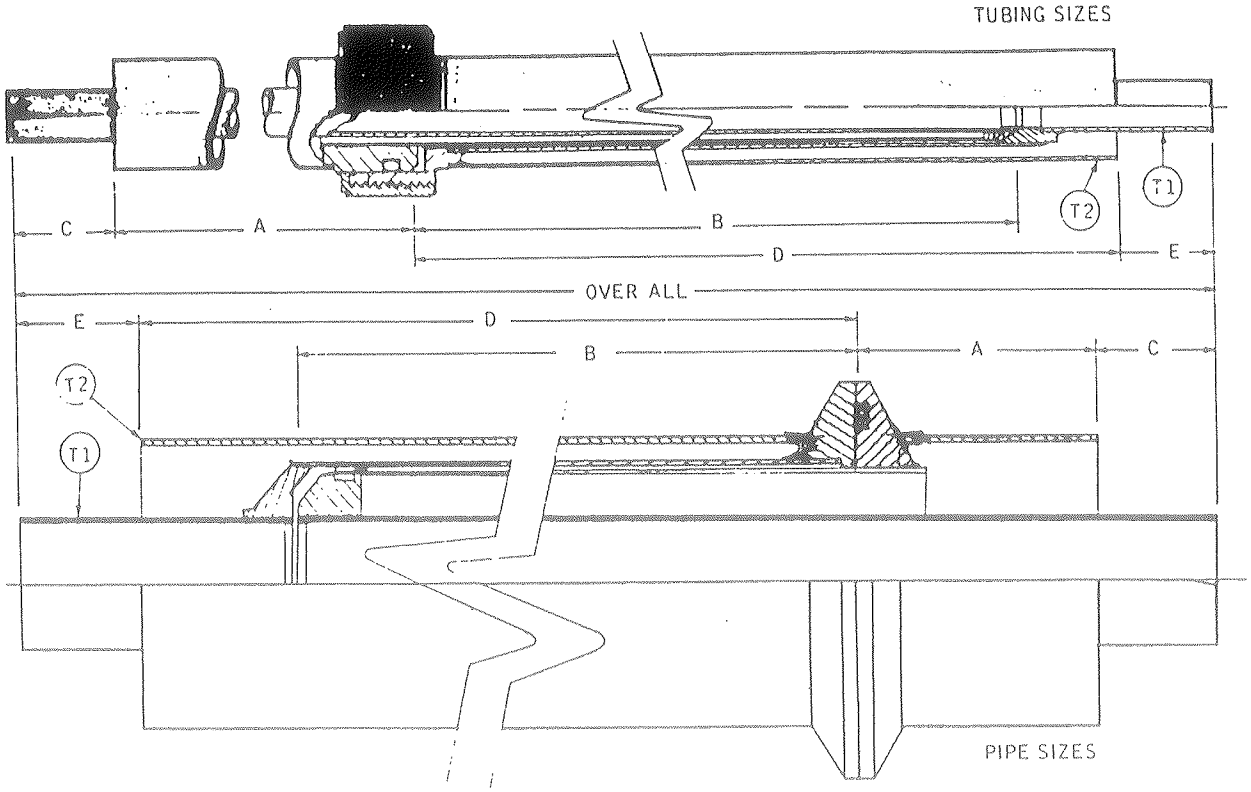


| SIZE | | PART NUMBER | OVER ALL | T1 | T2 | A | B | C | D | E | CONNECTION |
|---|---|---|---|---|---|---|---|---|---|---|---|
| TUBING SIZES | 1/4 | CC4-82-5W1 | 17 | 1/4 O.D. X .028 wall | 1 1/4 O.D. X .065 wall | 5 | 8 | 1 | 8 3/4 | 2 | 1 1/2-12 Thread |
| | 3/8 | CC4-83-5W1 | 17 | 3/8 O.D. X .035 wall | 1 1/4 O.D. X .065 wall | 5 | 8 | 1 | 8 3/4 | 2 | 1 1/2-12 Thread |
| | 1/2 | CC4-84-5W1 | 17 | 1/2 O.D. X .049 wall | 1 1/4 O.D. X .065 wall | 5 | 8 | 1 | 8 3/4 | 2 | 1 1/2-12 Thread |
| | 3/4 | CC4-86-5W1 | 17 | 3/4 O.D. X .049 wall | 1 3/4 O.D. X .065 wall | 5 | 8 | 1 | 8 3/4 | 2 | 2-12 Thread |
| PIPE SIZES | 3/4 | CC4-43-5W1 | 14 1/2 | 3/4 pipe sch. 5 | 1 1/2 pipe sch. 5 | 3 | 9 | 1 1/2 | 8 1/2 | 1 1/2 | MS27114-13 |
| | 1 | CC4-44-5W1 | 14 1/2 | 1 pipe sch. 5 | 2 pipe sch. 5 | 3 | 9 | 1 1/2 | 8 1/2 | 1 1/2 | MS27114-13 |
| | 1 1/2 | CC4-46-5W1 | 16 | 1 1/2 pipe sch. 5 | 3 pipe sch. 5 | 3 | 9 | 1 1/2 | 8 1/2 | 3 | MS27114-17 |
| | 2 | CC4-48-5W1 | 20 1/2 | 2 pipe sch. 5 | 3 pipe sch. 5 | 3 | 9 | 2 | 9 | 6 1/2 | MS27114-20 |
| | 3 | CC4-412-5W1 | 20 1/2 | 3 pipe sch. 5 | 5 pipe sch. 5 | 3 | 9 | 2 | 9 | 6 1/2 | MS27114-23 |
| | 4 | CC4-416-5W1 | 20 1/2 | 4 pipe sch. 5 | 6 pipe sch. 5 | 3 | 9 | 2 | 9 | 6 1/2 | MS27114-24 |

Tube Sizes 1/4 3/8 1/2 3/4

at 4K 0.7W 0.8W 1.3W 1.6W

## SPECIFICATIONS

SIZE: .250 inch Diameter through 4 inch Diameter
TEMPERATURE, WORKING:
Inner line: 0°K through 600°C
Outer line: -65°C through 150°C
PRESSURE, WORKING: 150 psig max.
HEAT LEAK in BTU/Hr:

| | "82" | "83" | "84" | "86" |
|---|---|---|---|---|
| at 4° K | 2.3 | 2.8 | 4.5 | 5.7 |
| 20° K | 2.2 | 2.6 | 4.1 | 5.3 |
| 76° K | 1.6 | 1.9 | 3.1 | 3.9 |

MATERIAL: 300 series (304 and 304L) cres;
coupling nut nickel plated brass

Cryolab
BOX 6008 · LOS OSOS, CA. 93402
(805) 528-1598

CVI



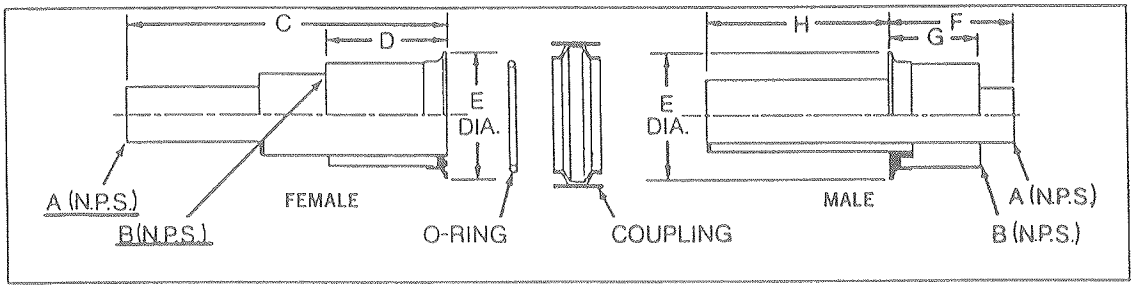


## BJ-Series Bayonet Connections

| Bayonet Assembly Model Numbers | Individual Model Numbers | | Bayonet Joint Size | N.P.S.** | | Dimensions (in inches) | | | | | | O-Ring | Coupling |
|---|---|---|---|---|---|---|---|---|---|---|---|---|---|
| | Male | Female | | A | B | C | D | E | F | G | H | | |
| BJA-075 | BJM-075 | BJF-075 | ¾" x 2" | ¾ | 2 | 10.00 | 3.00 | 3.375 | 4.50 | 3.00 | 7.98 | 30-0000 - 15229 | 11-0185 - 00210 |
| BJA-075-L* | BJM-075-L | BJF-075-L | ¾" x 2" | ¾ | 2 | 12.00 | 3.00 | 3.280 | 4.75 | 3.25 | 10.00 | - 15229 | - 00307 |
| BJA-100 | BJM-100 | BJF-100 | 1" x 2½" | 1 | 2½ | 10.00 | 3.00 | 3.375 | 4.00 | 3.00 | 7.98 | - 15231 | - 00210 |
| BJA-100-L* | BJM-100-L | BJF-100-L | 1" x 2½" | 1 | 2½ | 12.00 | 3.00 | 3.375 | 4.00 | 3.00 | 9.98 | - 15231 | - 00210 |
| BJA-150 | BJM-150 | BJF-150 | 1½" x 3" | 1½ | 3 | 11.50 | 3.00 | 4.375 | 4.50 | 3.00 | 8.03 | - 15238 | - 00212 |
| BJA-150-L* | BJM-150-L | BJF-150-L | 1½" x 3" | 1½ | 3 | 15.00 | 3.00 | 4.375 | 4.50 | 3.00 | 12.03 | - 15238 | - 00212 |
| BJA-200 | BJM-200 | BJF-200 | 2" x 4" | 2 | 4 | 11.50 | 3.00 | 5.375 | 4.50 | 3.00 | 8.03 | - 15246 | - 00214 |
| BJA-200-L* | BJM-200-L | BJF-200-L | 2" x 4" | 2 | 4 | 15.50 | 3.00 | 5.375 | 4.50 | 3.00 | 12.03 | - 15246 | - 00214 |
| BJA-300 | BJM-300 | BJF-300 | 3" x 5" | 3 | 5 | 11.50 | 3.00 | 6.625 | 5.00 | 3.00 | 8.03 | - 15254 | - 00217 |
| BJA-300-L* | BJM-300-L | BJF-300-L | 3" x 5" | 3 | 5 | 15.00 | 3.00 | 6.625 | 5.00 | 3.00 | 12.00 | - 15254 | - 00217 |
| BJA-400 | BJM-400 | BJF-400 | 4" x 6" | 4 | 6 | 11.00 | 3.00 | 7.875 | 5.00 | 3.00 | 7.87 | - 15261 | - 00111 |
| BJA-400-L* | BJM-400-L | BJF-400-L | 4" x 6" | 4 | 6 | 15.00 | 3.00 | 7.875 | 5.85 | 3.00 | 11.87 | - 15261 | - 00111 |
| BJA-600 | BJM-600 | BJF-600 | 6" x 10" | 6 | 10 | 15.00 | 3.00 | 11.875 | 5.00 | 3.00 | 11.87 | - 15274 | - 00101 |
| BJA-800 | BJM-800 | BJF-800 | 8" x 12" | 8 | 12 | 15.00 | 3.00 | 13.875 | 6.25 | 4.25 | 12.00 | 30-0000 - 15278 | 11-0185 - 00102 |

## Cool-Down and Heat Leak Performance Information

| Bayonet Size (Tube Sizes) | Regular Length | Long* | Cool-Down Loss from Ambient to Cryogenic Temperature, BTU | | Steady State Heat Leak from Ambient To Cryogenic Temp. BTU/Hr. | | |
|---|---|---|---|---|---|---|---|
| | | | 80°K | 20°K | 80°K | 20°K | (W) |
| ¾" x 2" | BJA-075 | | 26 | 27 | 16.5 | 18.0 | = 5.3 |
| ¾" x 2" | | BJA-075-L | 31 | 33 | 14.1 | 16.1 | = 4.7 |
| 1" x 2½" | BJA-100 | | 38 | 40 | 24.7 | 28.4 | = 8.3 |
| 1" x 2½" | | BJA-100-L | 46 | 48 | 20.8 | 23.8 | = 7.0 |
| 1½" x 3" | BJA-150 | | 48 | 50 | 27.6 | 31.8 | = 9.3 |
| 1½" x 3" | | BJA-150-L | 57 | 60 | 22.1 | 25.9 | = 7.6 |
| 2" x 4" | BJA-200 | | 60 | 63 | 35.0 | 40.2 | = 11.8 |
| 2" x 4" | | BJA-200-L | 70 | 73 | 19.3 | 21.9 | = 6.4 |
| 3" x 5" | BJA-300 | | 225 | 237 | 64.8 | 74.5 | = 21.8 |
| 4" x 6" | BJA-400 | | 217 | 228 | 122.9 | 141.8 | = 41.5 |
| 6" x 10" | BJA-600 | | 602 | 633 | 166.4 | 191.2 | = 56.0 |
| 8" x 12" | BJA-800 | | 854 | 898 | 228.4 | 263.5 | = 77.2 |

**Notes:**

Bayonet assembly model numbers include the male, female, O-ring and coupling. Each of these parts is available separately by its appropriate model number.

*The "L" suffix model numbers refers to extra length of male and female counterparts. Added length gives lower heat leak characteristics. The long bayonets are specifically recommended for applications at 20°K or below.

**Normally provided in schedule 5; other schedules available.

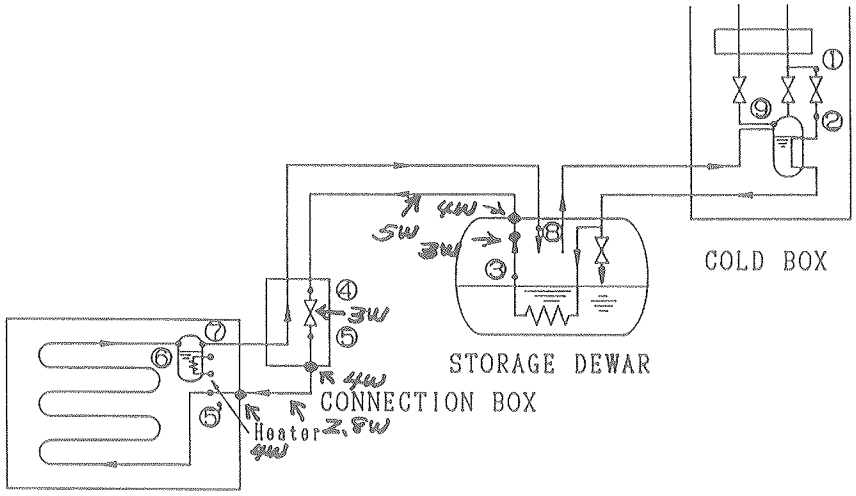


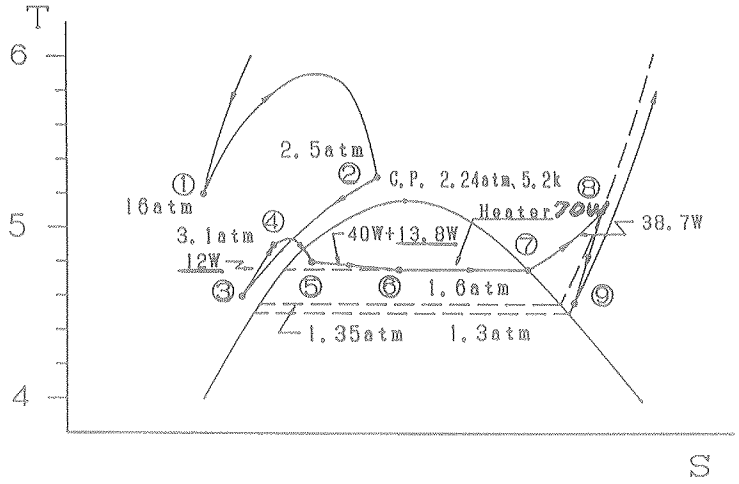


| State-point | T (K) | P (atm) | m (g/s) | ρ (Kg/L) | H (J/g) | Quality X |
|---|---|---|---|---|---|---|
| 1 | 5.2 | 16.0 | | 0.152 | 19.74 | —— |
| 2 | 5.3 | 2.5 | | 0.085 | 19.74 | —— |
| 3 | 4.6 | 2.5 | 8 | 0.124 | 11.92 | —— |
| 4[a] | 4.9 | 3.1 | 8 | 0.121 | 13.42 | —— |
| 5 | 4.8 | 1.65 | 8 | —— | 13.42 | 0.03 |
| 5' | 4.8 | 1.65 | 8 | —— | 15.15 | 0.13 |
| 6[b] | 4.76 | 1.6 | 8 | —— | 20.15 | 0.44 |
| 7 | 4.76 | 1.6 | 7 | 0.029 | 28.98 | —— |
| 8[c] | 5.1 | 1.35 | 7 | 0.02 | 34.51 | —— |

a: The transfer go line between statepoints 3 and 4 assumes a load of 12W.
b: The magnet thermal load is 40W.
c: The transfer returu line between statepoints 7 and 8 assumes a load of 38.7W.

Thermodynamics of the cryogenic system for the SDC magnet.

DEC. 2. 1992

KEK Revise. 1

# Recovery times to steady state operation after quench

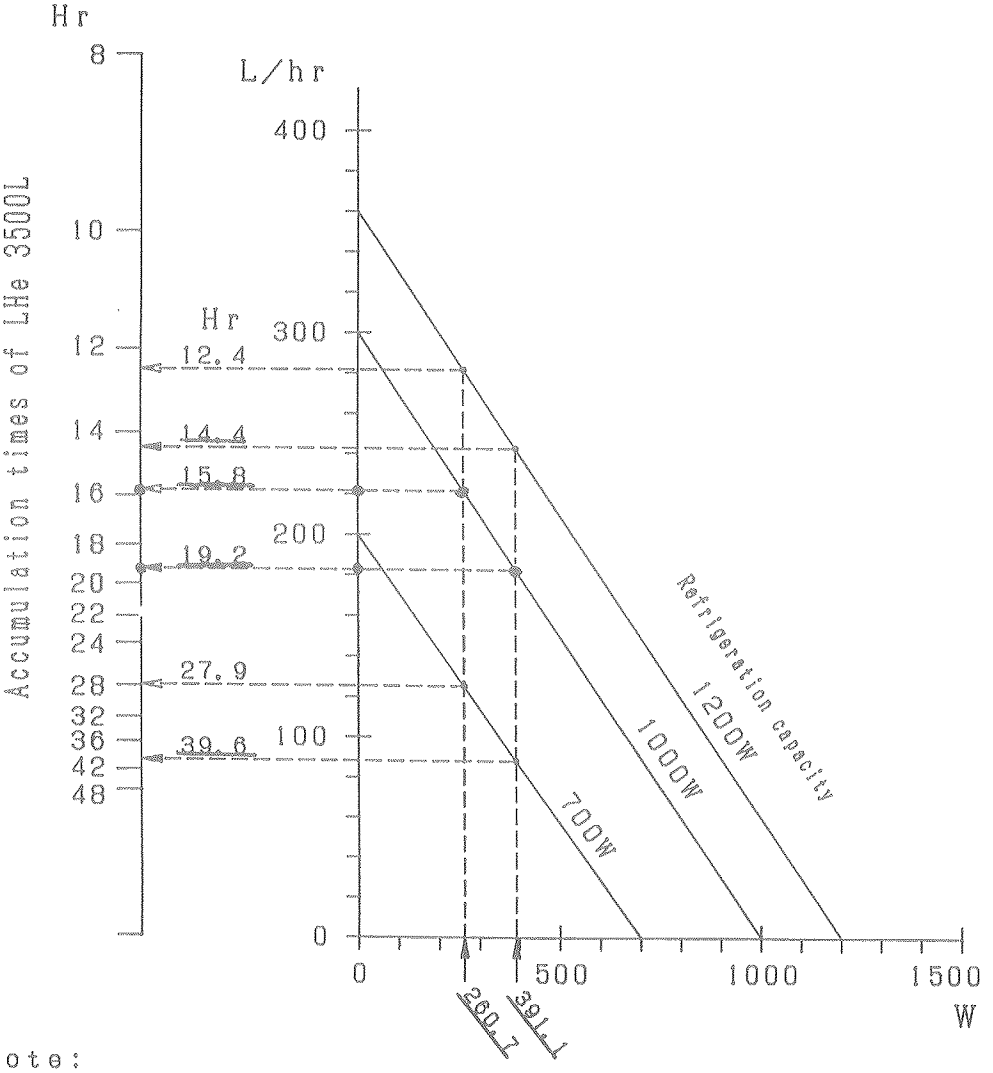


Note:

260.7W=305.7W-45W (0.5g/s ~ at current load flows)

391.1W=260.7WX1.5 (Safety factor)

NOV. 26. 1992

KEK

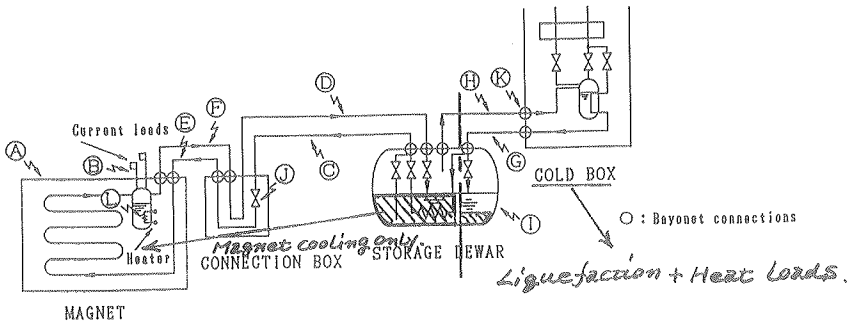


Estimate of refrigeration load for the SDC cryogenic system

| | Steady state operation | Note |
|---|---|---|
| (A) Steady load in magnet | 40W | → 45W (0.5g/s) ~ Avoid heat load to mag. |
| (B) Current leads | ~~98W (30L/hr)~~ | 1L/hr=3W |
| (C) Transfer line (supply) | 5W | With $LN_2$ shield |
| (D) Transfer line (return) | 20W | With $LN_2$ shield |
| (E) Transfer line (supply) | 2.8W | 0.28W/mX10m(1B) |
| (F) Transfer line (return) | 3.7W | 0.37W/mX10m($1\frac{1}{2}$B) |
| (G) Transfer line (supply) | 7.4W | 0.37W/mX20m($1\frac{1}{2}$B) |
| (H) Transfer line (return) | 8.8W | 0.44W/mX20m(2B) |
| (I) Storage dewar | 3W | |
| (J) Control valves | 15W | 3WX5 valves |
| (K) Bayonet connections | 40W | 4WX10 sets |
| (L) Vaporizing heater | 70W | Flow rate = 8 g/s |
| Total heat load | ~~385.7W~~ 260.7W | NOV. 25. 1992 KEK |

KEK ENGINEERING NOTE

CODE PAGE /

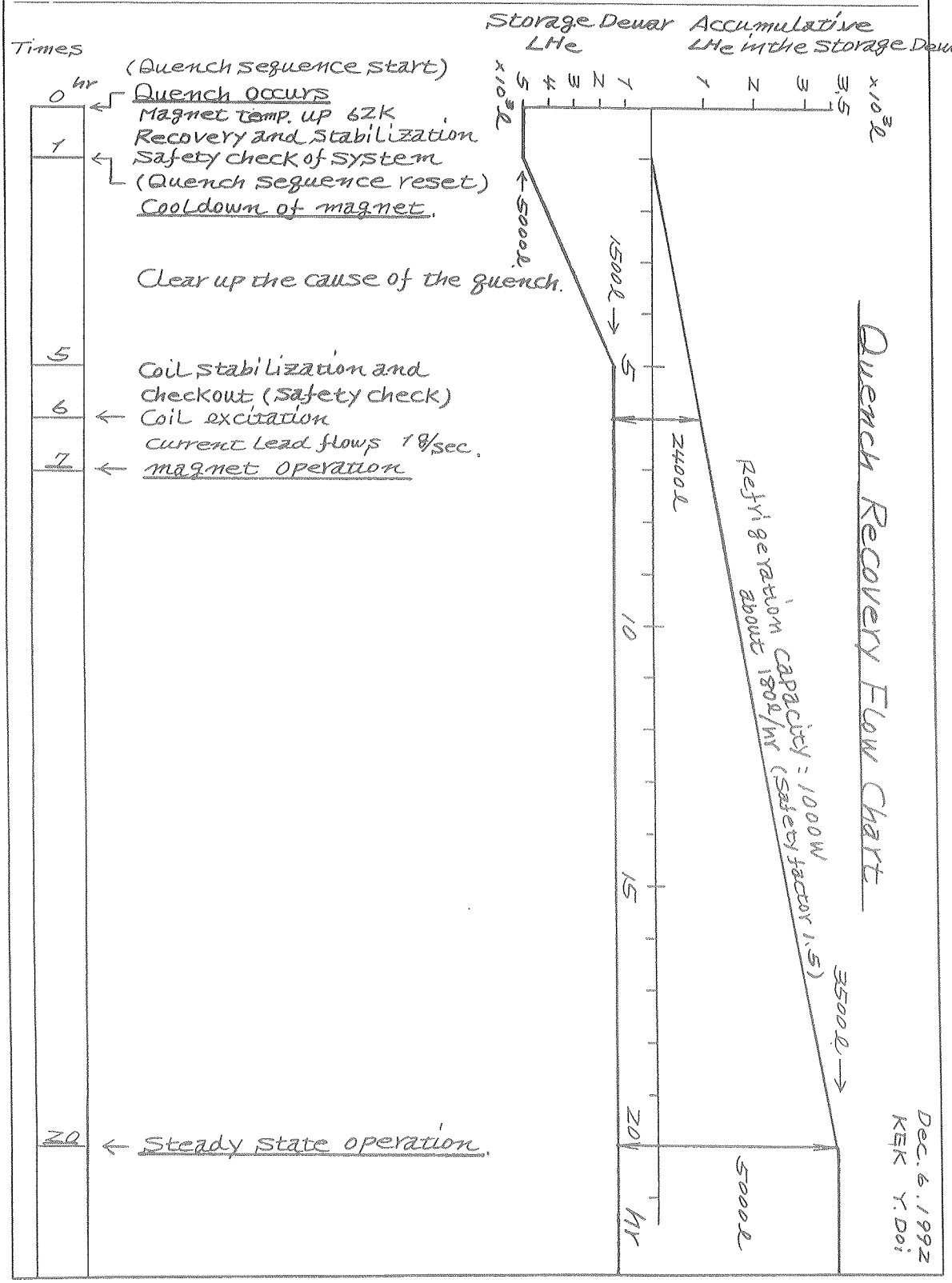

# Operation modes for the SDC magnet

1. Normal operation modes.
   - ① Initial state setting.
   - ② Compressor start.
   - ③ Cold box gas circulation.
   - ④ Circulating purification of the system.
   - ⑤ Magnet cool down. -1-
   - ⑥ Magnet cool down. -2-
   - ⑦ Steady state operation.
   - ⑧ LHe recovery.
   - ⑨ Magnet warm up.
   - ⑩ Operation stop.

2. Emergency modes.
   - C-1.(1) Magnet quench.
     (2) Magnet quench recovery.
   - C-2. Compressor emergency stop.
   - C-3. Turbine trip - Case 1.
     Turbine trip - Case 2.
   - C-4. Flow down of the current leads.

# Main Specifications of the Cryogenic Systems for the SDC Magnet

## • Cold Box

| | |
|---|---|
| Type | Claude cycle |
| Refrigeration capacity | 1,000 W (at 4.5 K) |
| Liquefaction rate | 300 L/h |
| Precooling | $LN_2$ |

## • Compressor

| | |
|---|---|
| Type | Oil lubricated screw compressor |
| Flow rate | 4400 $Nm^3/hr$ |
| Discharge pressure | 16 $kg/cm^2G$ (228 Psig) |
| Suction pressure | 0.15 $kg/cm^2G$ (2 Psig) |
| Motor power | 820 KW × 2P |

## • Purifier

| | |
|---|---|
| Type | Low temperature adsorption |
| Operation pressure | 16 $kg/cm^2G$ (228 Psig) |
| Flow rate | 300 $Nm^3/hr$ |
| Inlet impurity | Air component 1,000 PPM |
| | $H_2O$ 1,000 PPM |
| Outlet impurity | $O_2$ Below 1 PPM |
| | $H_2O$ Below 1 PPM |
| Operation length | 120 hr |

Automatic reactivation by sequencer

## • He Storage Dewar

| | |
|---|---|
| Type | Horizontal vacuum insulated vessel |
| Capacity | 5,000 L (1300 gal) |
| Design pressure | 2 $kg/cm^2G$ (28 Psig) |
| LHe loss per day | 0.8 % |

## • $LN_2$ Storage Tank

| | |
|---|---|
| Type | Horizontal vacuum insulated vessel |
| Capacity | 70,000 L (18,500 gal) |
| Design pressure | 10 $kg/cm^2G$ (142 Psig) |
| $LN_2$ loss per day | 0.35 % |

## • He Gas Buffer Tank

| | |
|---|---|
| Type | 3 sets |
| Capacity | Horizontal cylindrical vessel |
| Design pressure | 100 $m^3$ |
| | 20 $kg/cm^2G$ (284 Psig) |

## • Recovery He Gas Tank

| | |
|---|---|
| Type | 1 set |
| Capacity | Horizontal cylindrical vessel |
| Design pressure | 50 $m^3$ |
| | 20 $kg/cm^2G$ (284 Psig) |

## • Connection Box

| | |
|---|---|
| Type | Vertical vacuum insulated box |
| Inside element | Transfer tube Connection, control valve, Instrument. |

## • Magnet Valve Unit

| | |
|---|---|
| Type | 1 set |
| Setting element | Unit |
| | $LN_2$ vaporizer, control valve, manual valve, safety value, instrument. |

## • He Gas Warmer

| | |
|---|---|
| Type | Ambient - Air heated warmer |
| Flow rate | 800 $Nm^3/hr$ |
| Design pressure | 6 $kg/cm^2G$ (85 Psig) |
| Inlet temperature | -196 °C (77K) |