Fermilab

SDC SOLENOID DESIGN NOTE #189

TITLE: Conceptual Design Study of the SDC Solenoid Power Supply

AUTHOR: N. Kimura (KEK)

DATE: Dec. 9, 1992

This design note is one of a series which represents the proceedings of the SDC solenoid subgroup meeting held in Japan on December 8-11, 1992. The plan and purpose of the meeting was to:

- Look at the prototype coil winding and honeycomb vessel R&D in Japan
- Reports of technical progress from each group
- Plan and schedule for the prototype magnet assembly and test
- **Discussions on design of the SDC solenoid power supply**
- Discussions on cryogenic design for the SDC solenoid
- Discussions on responsibilities for the cryogenics fabrication
- Response to the report of the DOE review sub-committee
- Publications and presentations of the technical progress

SDC Solenoid Subgroup Meeting in Japan

Conceptual Design Study of the SDC Solenoid P/S

N. Kimura (KEK)

Dec. 9, 1992

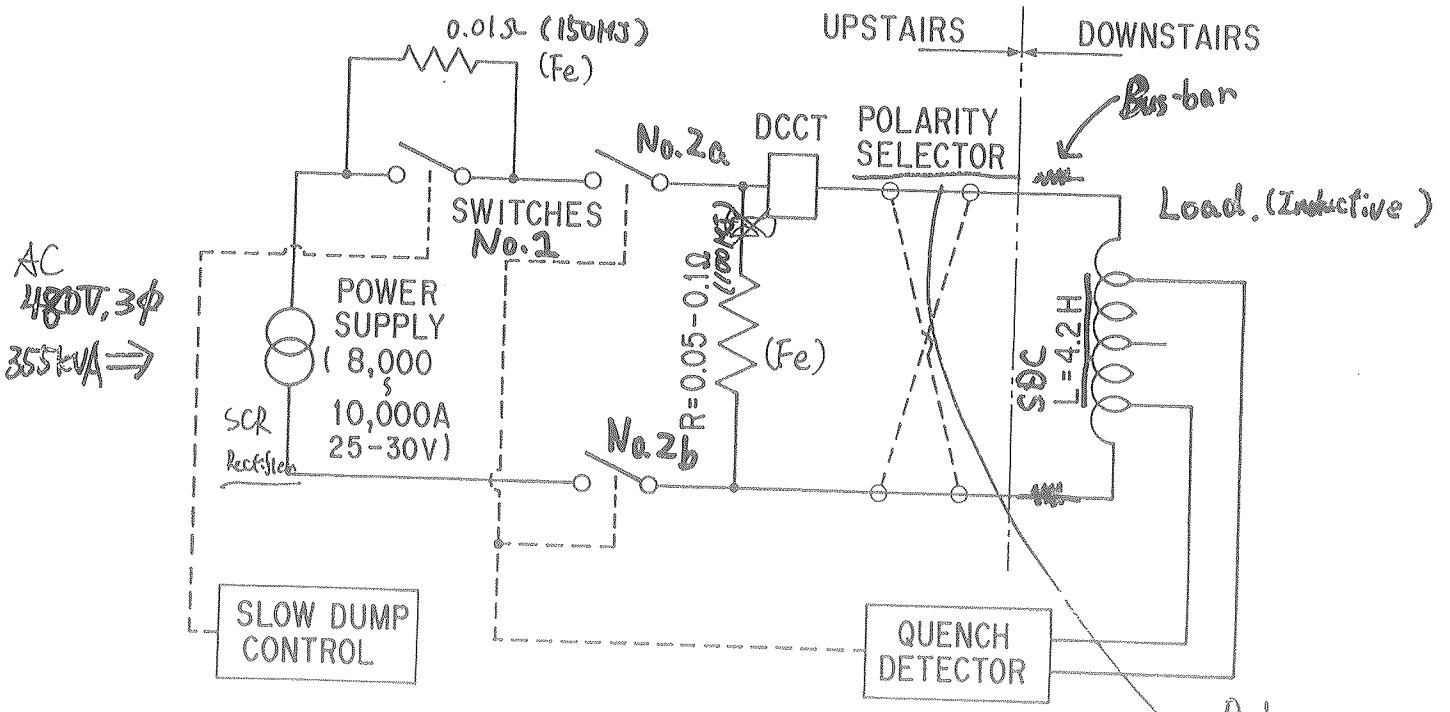

DCCT : DC Current transformer

Polarity ~~Selec~~ change by Bus-bar working

Basic circuit of Power Supply for SDC

Parameters of SDC Power Supply

AC. input	:4~~2~~80V±10%,3phases,~~50~~60Hz,355kVA
Maximum DC. output	:±30V/8400A
Current ripple	:<±1×10^{-2} at resistive load
	<±1×10^{-4} at inductive(4.2H) load
Current drift	:<±1×10^{-4} p-p/4hr
Inductance voltage (1mT/s)	:±17V
Bus-bar voltage drop	:10V
Ramp rate	:1-10A/s
Fast discharge time cons.	:45s
Slow discharge time cons.	:500s
DC. switching time	:<1s
DC. circuit breaker	:500V/8400A×2 (less SW.No.2b) 500V/3400A×3 (with SW. No.2b)
Energy dump resistor	:R_{01} 10mΩ(Fe) 150MJ
	R_{02} 50mΩ(Fe) 100MJ
Dimensions (minimum size)	:6000W×1800D×2100H(11kW/m^3) ← less Switch No.2b
Cooling Water	:pure water (10kΩ.cm minimum) 7.0W×1.8D×2.1H (m)
Cooling System.	60l/min.,30°C ~~maximum~~ at inlet (4.5kW/m^3 with No.2b
	30°C inlet 45°C outlet maximum ΔT 15°C
	Supply Pressure <10 kg/cm^2G, Pressure Drop<5 kg/cm^2G

3

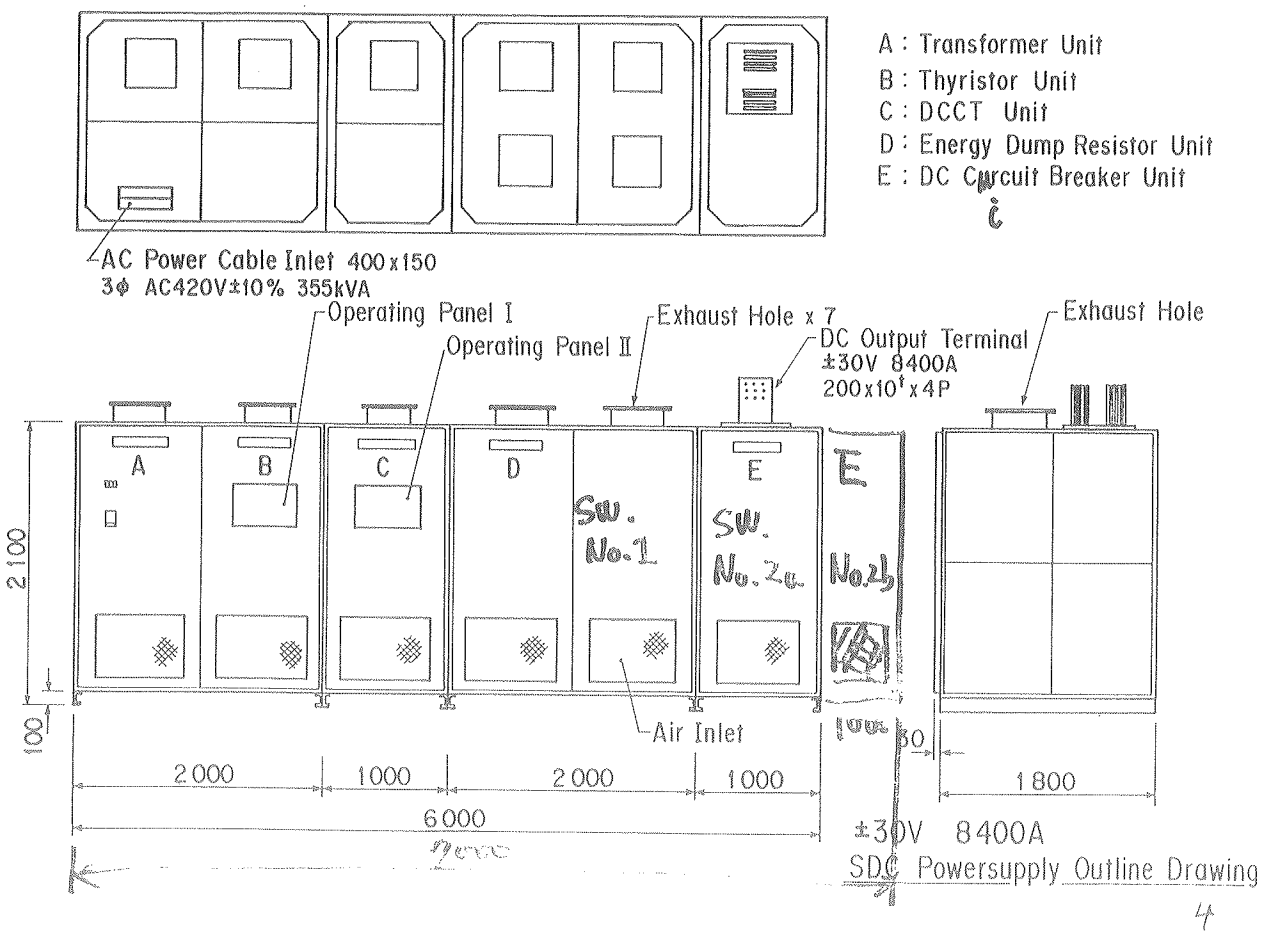
A : Transformer Unit
B : Thyristor Unit
C : DCCT Unit
D : Energy Dump Resistor Unit
E : DC Circuit Breaker Unit
AC Power Cable Inlet 400x150
3φ AC420V±10% 355kVA
Operating Panel I
Operating Panel II
Exhaust Hole x 7
DC Output Terminal
±30V 8400A
200x10t x 4P
Exhaust Hole
A
B
C
D
E
Sw. No.1
Sw. No.2
Air Inlet
2100
100
2000
1000
2000
1000
6000
1800
±30V 8400A
SDC Powersupply Outline Drawing

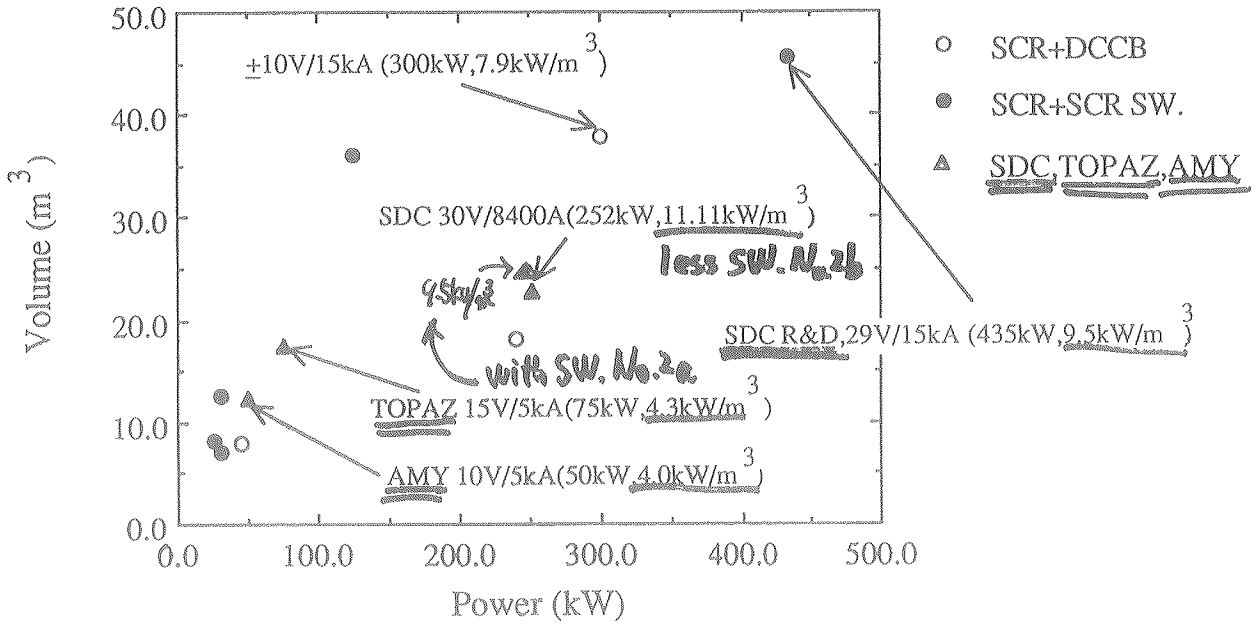
50.0
40.0
30.0
20.0
10.0
0.0
Volume (m3)
0.0
100.0
200.0
300.0
400.0
500.0
Power (kW)
±10V/15kA (300kW,7.9kW/m3)
SDC 30V/8400A(252kW,11.11kW/m3)
less SW. No.2b
9.5kW/m3
with SW. No.2a
SDC R&D,29V/15kA (435kW,9.5kW/m3)
TOPAZ 15V/5kA(75kW,4.3kW/m3)
AMY 10V/5kA(50kW,4.0kW/m3)
SCR+DCCB
SCR+SCR SW.
SDC,TOPAZ,AMY

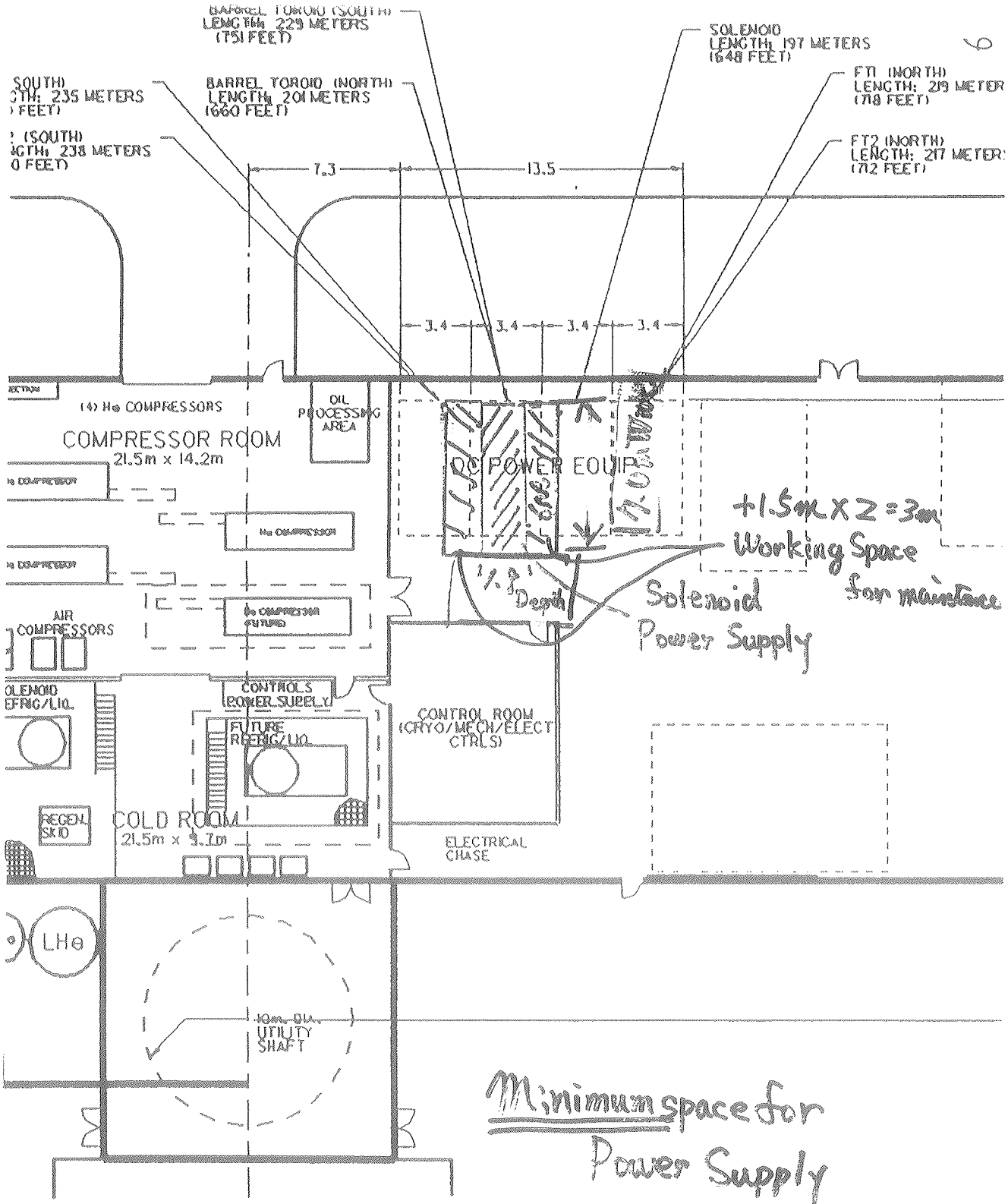

Minimum space for Power Supply

7.0W X 4.8D X 2.1H (m)

LDING - COLD ROOM AND
SOR ROOM FLOOR PLAN

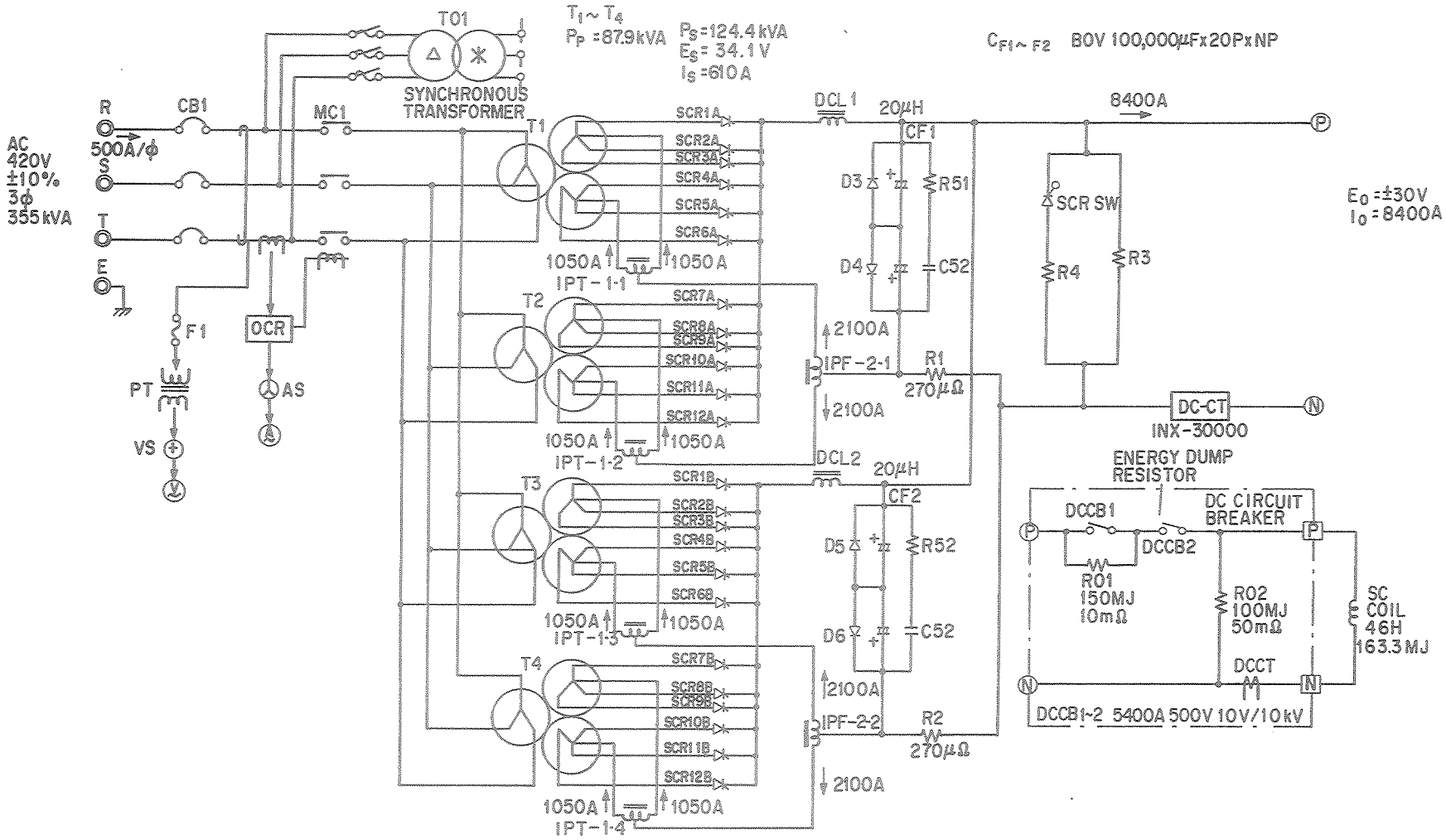
AC
420V
±10%
3φ
355kVA
R
S
T
E
500A/φ
CB1
MC1
TO1
SYNCHRONOUS
TRANSFORMER
T1~T4
Pp =87.9kVA
Ps=124.4kVA
Es= 34.1V
Is =610A
CF1~F2 80V 100,000μF×20P×NP
T1
T2
T3
T4
SCR1A
SCR2A
SCR3A
SCR4A
SCR5A
SCR6A
SCR7A
SCR8A
SCR9A
SCR10A
SCR11A
SCR12A
SCR1B
SCR2B
SCR3B
SCR4B
SCR5B
SCR6B
SCR7B
SCR8B
SCR9B
SCR10B
SCR11B
SCR12B
1050A
IPT-1-1
IPT-1-2
IPT-1-3
IPT-1-4
DCL1
20μH
CF1
D3
D4
R51
C52
2100A
IPF-2-1
R1
270μΩ
DCL2
CF2
D5
D6
R52
IPF-2-2
R2
F1
OCR
PT
AS
VS
8400A
SCR SW
R4
R3
DC-CT
INX-30000
E0 =±30V
I0 =8400A
ENERGY DUMP
RESISTOR
DCCB1
DCCB2
DC CIRCUIT
BREAKER
R01
150MJ
10mΩ
R02
100MJ
50mΩ
DCCT
SC
COIL
46H
163.3MJ
DCCB1~2 5400A 500V 10V/10kV

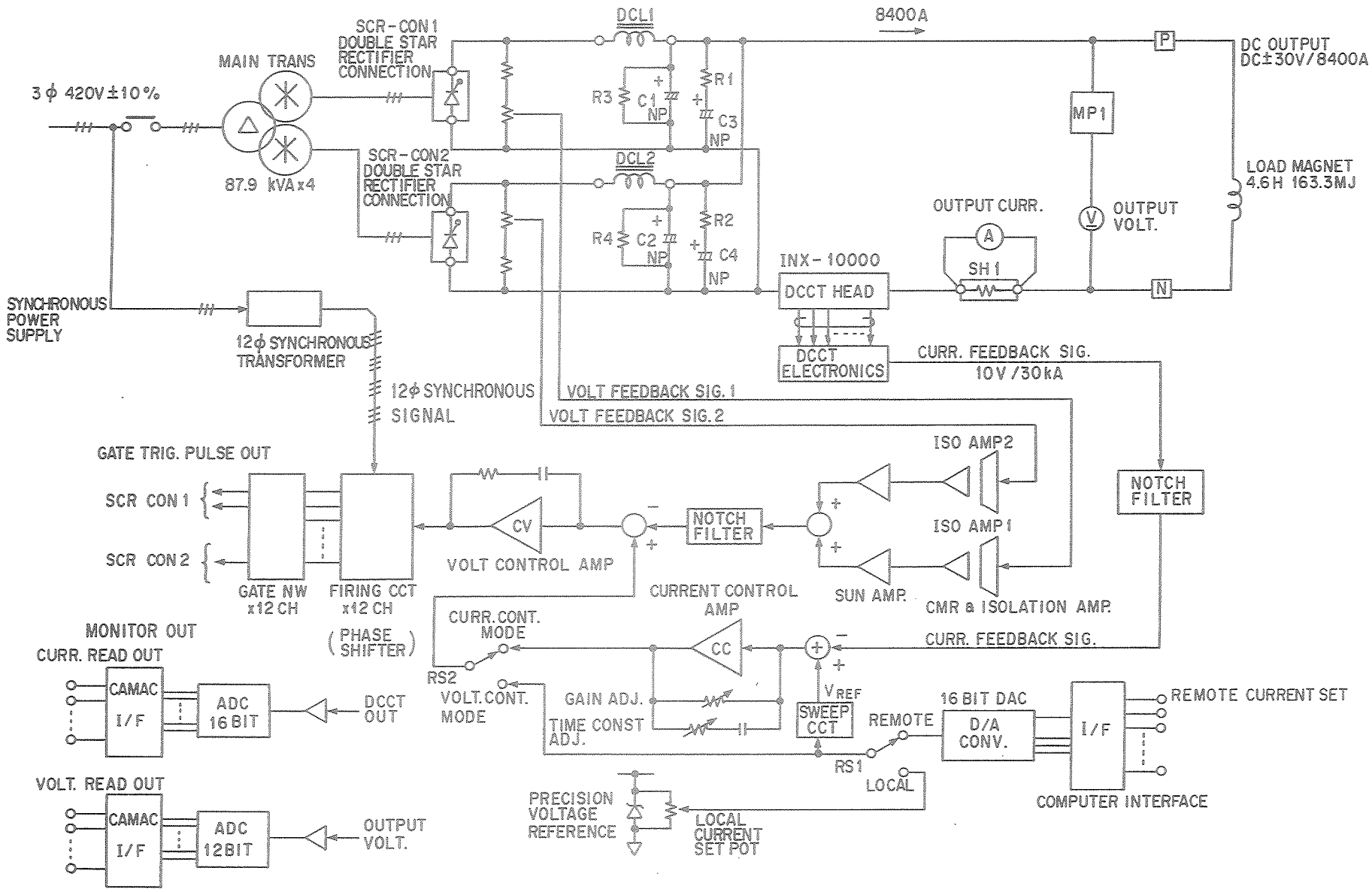
3φ 420V±10%
MAIN TRANS
87.9 kVA x4
SCR-CON1
DOUBLE STAR
RECTIFIER
CONNECTION
SCR-CON2
DOUBLE STAR
RECTIFIER
CONNECTION
DCL1
DCL2
R3
C1
NP
R1
C3
NP
R4
C2
NP
R2
C4
NP
8400A
P
N
DC OUTPUT
DC±30V/8400A
MP1
LOAD MAGNET
4.6H 163.3MJ
OUTPUT CURR.
A
SH1
V
OUTPUT
VOLT.
INX-10000
DCCT HEAD
DCCT
ELECTRONICS
CURR. FEEDBACK SIG.
10V/30kA
SYNCHRONOUS
POWER
SUPPLY
12φ SYNCHRONOUS
TRANSFORMER
12φ SYNCHRONOUS
SIGNAL
VOLT FEEDBACK SIG. 1
VOLT FEEDBACK SIG. 2
ISO AMP2
ISO AMP1
NOTCH
FILTER
GATE TRIG. PULSE OUT
SCR CON 1
SCR CON 2
GATE NW
x12 CH
FIRING CCT
x12 CH
(PHASE
SHIFTER)
CV
VOLT CONTROL AMP
NOTCH
FILTER
SUN AMP.
CMR & ISOLATION AMP.
CURRENT CONTROL
AMP
CC
CURR. FEEDBACK SIG.
CURR.CONT.
MODE
RS2
VOLT.CONT.
MODE
GAIN ADJ.
TIME CONST
ADJ.
V REF
SWEEP
CCT
REMOTE
RS1
LOCAL
16 BIT DAC
D/A
CONV.
I/F
REMOTE CURRENT SET
COMPUTER INTERFACE
PRECISION
VOLTAGE
REFERENCE
LOCAL
CURRENT
SET POT
MONITOR OUT
CURR. READ OUT
CAMAC
I/F
ADC
16 BIT
DCCT
OUT
VOLT. READ OUT
CAMAC
I/F
ADC
12BIT
OUTPUT
VOLT.