Fermilab

Particle Physics Division

Mechanical Department Engineering Note

Number: MD-ENG-465 Date: 01APRIL2013

Project: ----------NOvA ND DETECTOR

Project Internal Reference: -- DWG # 493588

Title: ----------ND 3X2 MUON CATCHER MODULE

Author(s): ----------VILLEGAS

Reviewer(s): Bob Wands RWWo 6/18/13

Key Words:

Abstract/Summary: HORIZ TWO MODULE PLANE & VERT THREE MODULE PLANE WILL BE ATTACHED TO THE STEEL PLATE WITH REUSED ALUMINUM CLIPS.

Applicable Codes: AISC MANUAL OF STEEL CONSTRUCTION
9TH EDITION.
WELDING IN ACCORDANCE TO STRUCTURAL STEEL CODE ANSI/AWS D.1

Muon Catcher Weld Analysis – On Cart and Lift from Horizontal

Bob Wands
June 14, 2013

Lift from Horizontal - Spreader Bar Adapter Plate to 4 inch Steel Plate Weld

Spreader bar adapter plates are the primary lifting point for muon catcher. The total weight of the muon catcher is assumed to 30000 lbs (actual weight is 19700 lbs). There are two adapter plates, evenly sharing the load.

The weld of the adapter plate to the 4 inch thick steel plate is shown in Fig. 1.

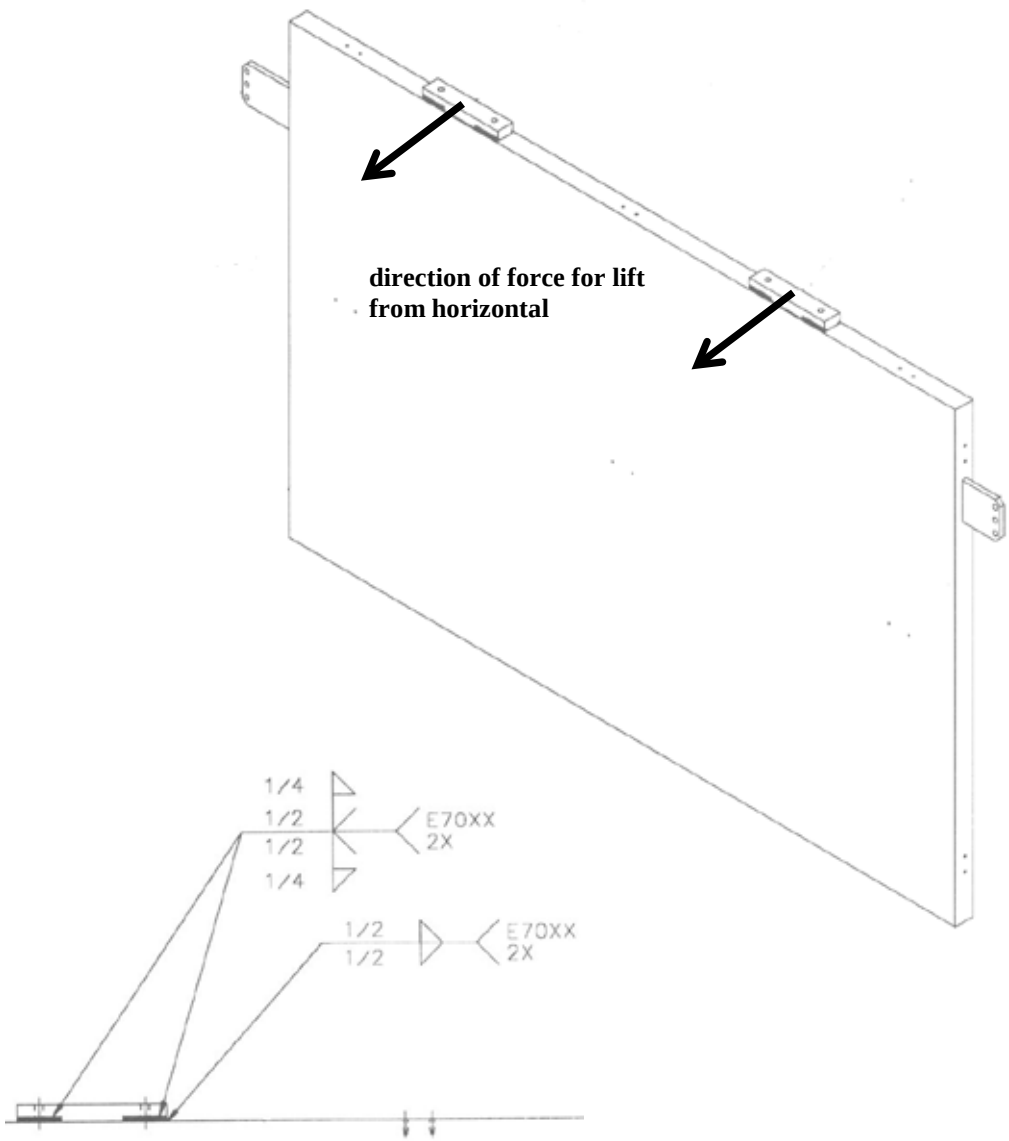

Figure 1. Weld between Spreader Bar Adapter and 4 inch Plate

The specified weld is a ½ inch groove weld with a ¼ inch cover fillet along the long edges, and a ½ inch fillet weld along each of the short edges. For the stress analysis, it is assumed that only the ½ inch groove weld is present. There are four of these welds on a single adapter plate, and each is five inches long

The total weld length is 20 inches. With a 45 degree chamfer for weld prep, the effective throat is 0.707(0.5) = 0.353 inches. The total stress area of the weld on a single adapter plate is then 4(5)(0.353) = 7.06 in^2. For a load of 15000 lbs, the resulting weld stress is 2125 psi.

This weld is on the load, and not the spreader bar, and therefore the requirements of BTH-1-2005 or ASME-2030 do not have to be met. The maximum allowable shear stress on the weld for E70 rod is taken as the AISC allowable of 0.3(70) = 21000 psi. This is well above the calculated weld stress.

The tensile stress area on the base metal is 4(5)(0.5) = 10 in^2. The normal tensile stress on the base metal is 15000/10 = 1500 psi. This is less than the allowable of $0.6F_y$, where F_y = the yield stress of the base metal = 36000 psi (A36 steel). Therefore, the allowable stress is 21600 psi, well above the calculated stress of 1500 psi.

<u>Lift from Horizontal - Welds at Base</u>

An FE half-model was created to look in detail at the weld stresses in the components attached to the bottom of the 4 inch iron. It is through these components that load passes in bending and shear during the lift to horizontal. The FE model is shown in Fig. 2

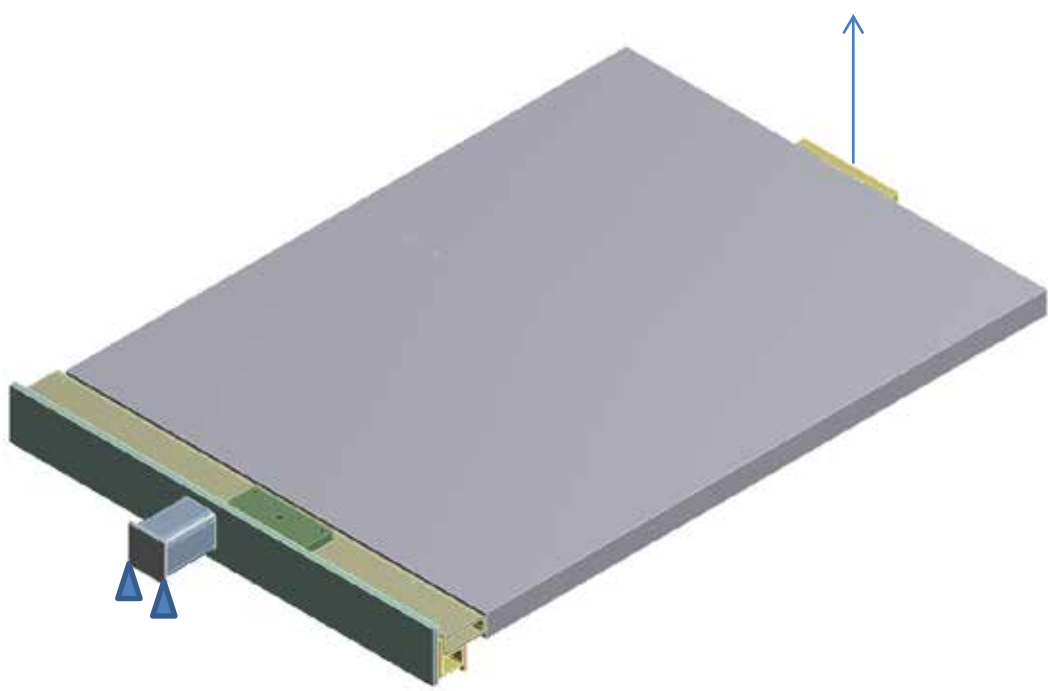

Figure 2. Muon catcher positioned for lift to vertical

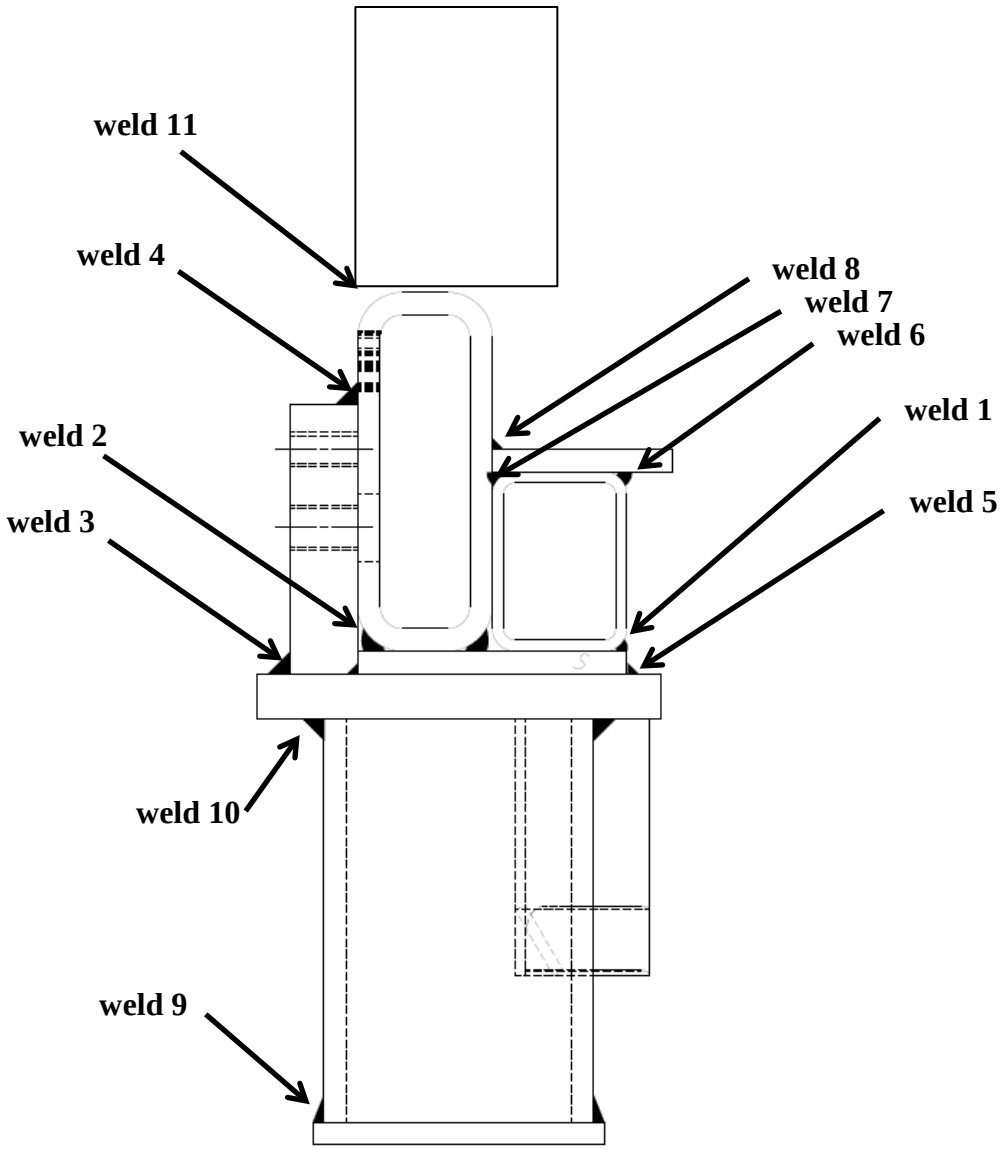

Figure 3. Weld Locations

The welds locations are identified in Fig. 3. The forces and moments on each weld were extracted from the FEA and applied to standard weld-as-a-line analysis. Table I shows the forces and moments on each weld. Table II gives the maximum force, in lbs/in, on each weld, as well as the available capacity. All weld forces are below the available capacity of the weld.

The base metal stress in shear is taken as 0.4(36000) = 14400 psi. Given that the full leg of the fillet welds can used for this calculation, then the available strength of the weld considering base metal shear can be scaled from the weld shear available strength by multiplying by (1/0.707)(14400/21000) = 0.96. This means that the available strength considering base metal shear is 96% of the available capacity considering weld shear. All weld forces remain below the available capacity of the weld for the condition of base metal shear.

Table II. Forces and Moments on Welds

Weld	FX (lbs)	FY (lbs)	FZ (lbs)	MX (lb-in)	MY (lb-in)	MZ (lb-in)	Force (vector sum, lbs)	Moment (vector sum, lb-in)
1	-1912	607	-328	0	-2263	14889	2033	15060
2	885	2713	-4740	42077	679	10281	5533	43320
3	2596	2106	-509	0	-3754	-17254	3381	17658
4	-2596	-2106	544	0	-141	1677	3387	1683
5	3064	2106	-4477	34268	-1507	-6073	5819	34835
6	1446	-607	395	-2052	634	-8109	1617	8388
7	828	1179	-5903	0	21653	-3146	6077	21880
8	211	0	4189	-2096	1719	-272	4194	2724
9	-211	0	-4163	39678	-1719	-1627	4168	39749
10	-379	0	-3557	75378	-6285	-2281	3577	75674
11	-219	1786	-6341	0	22260	4469	6591	22704

Table II. . Comparison of Required and Available Weld Capacity

Weld	Force on Weld (lbs/in) from forces	Force on Weld (lbs/in) from moments	Maximum Force on Weld (lbs/in)	Capacity of Weld (lbs/in)
1	54	245	299	5565
2	74	396	470	5565
3	242	3,812	4054	7420
4	242	364	606	7420
5	78	165	243	5565
6	43	35	78	5565
7	320	0	320	5565
8	175	49	224	5565
9	174	861	1034	7420
10	72	1,016	1088	5565
11	347	707	1053	5565

Frame Welds for Cart Load Case

Seventeen frame welds were checked. These welds are identified Figs. 5-8.

And FEA was performed, using the model shown in Fig. 4.

The forces and moments at each weld were extracted from the FE model, and conventional weld-as-a-line analysis was used to determine the required capacity in lbs/in of each weld. This was then compared to the actual capacity of a 0.25 inch fillet weld made with a E70xx rod. This capacity is 0.25(0.707)(0.3)(70000) = 3711 lbs/in

Table II shows the forces and moments on the weld. Table III shows the total weld force in lbs/in, and compares that with the weld capacity. In all cases, the welds have sufficient strength.

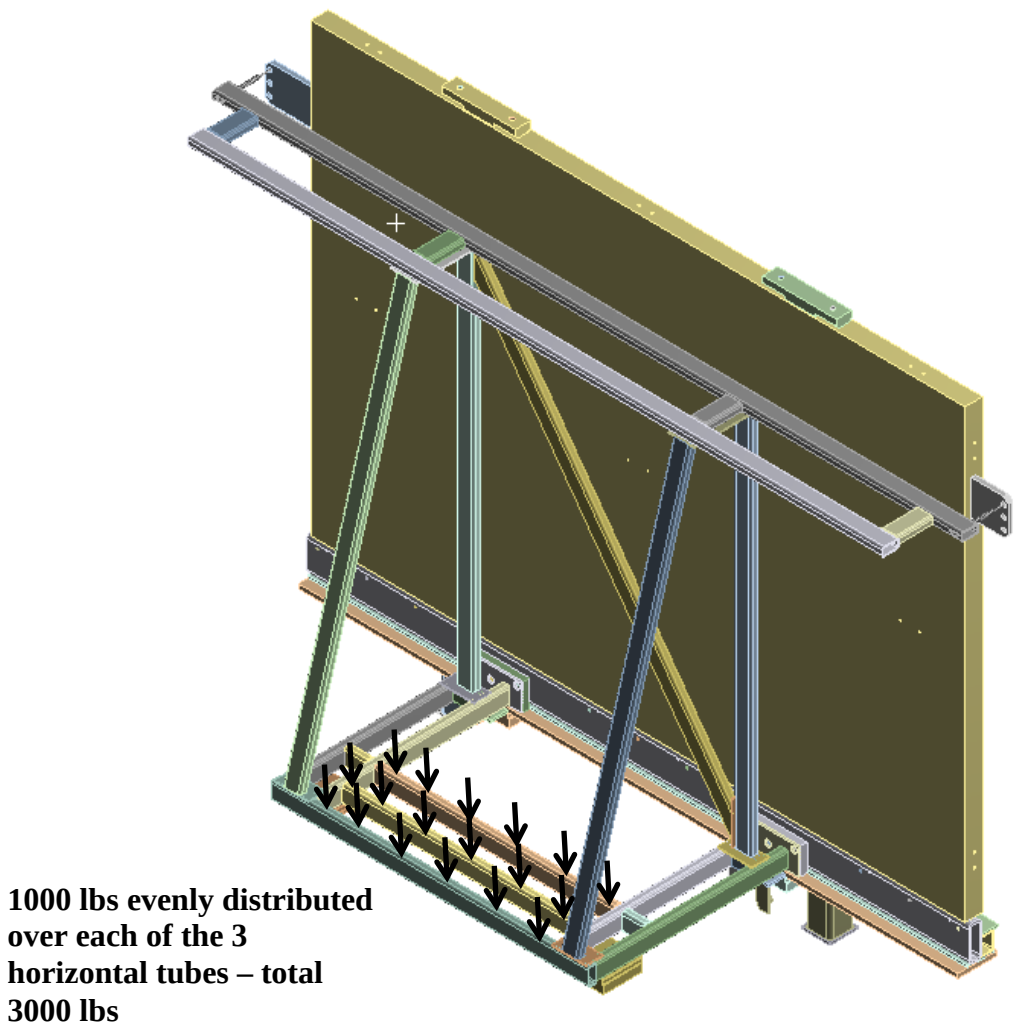

Figure 4. FE Model

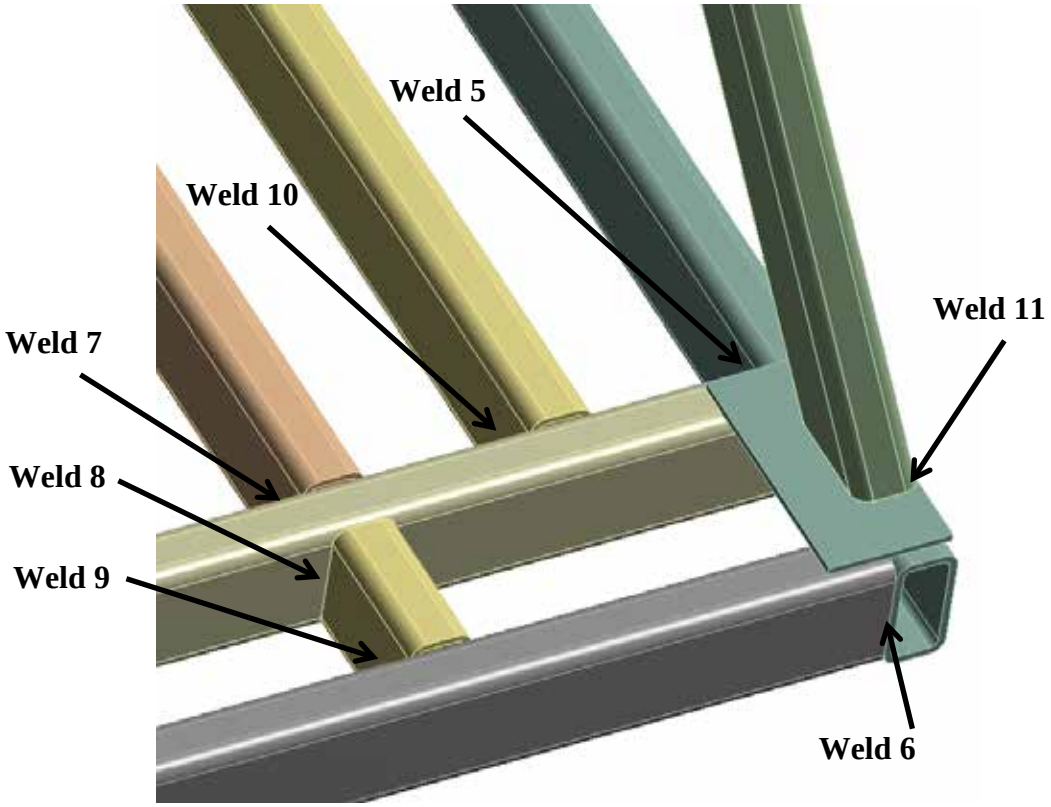

Figure 5.

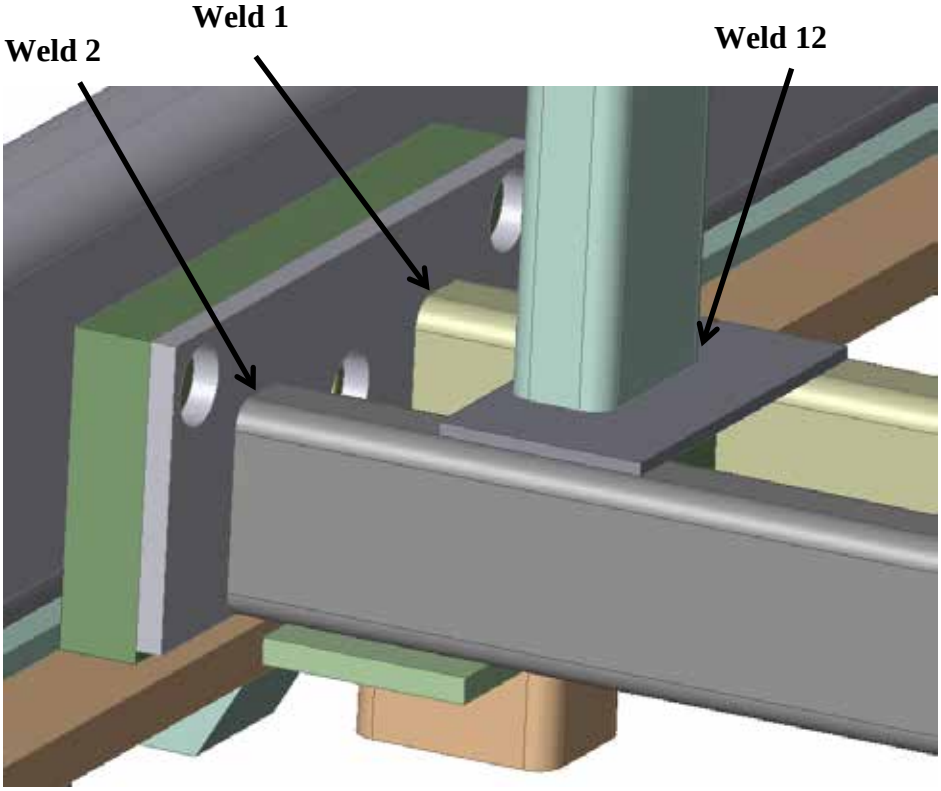

Figure 6.

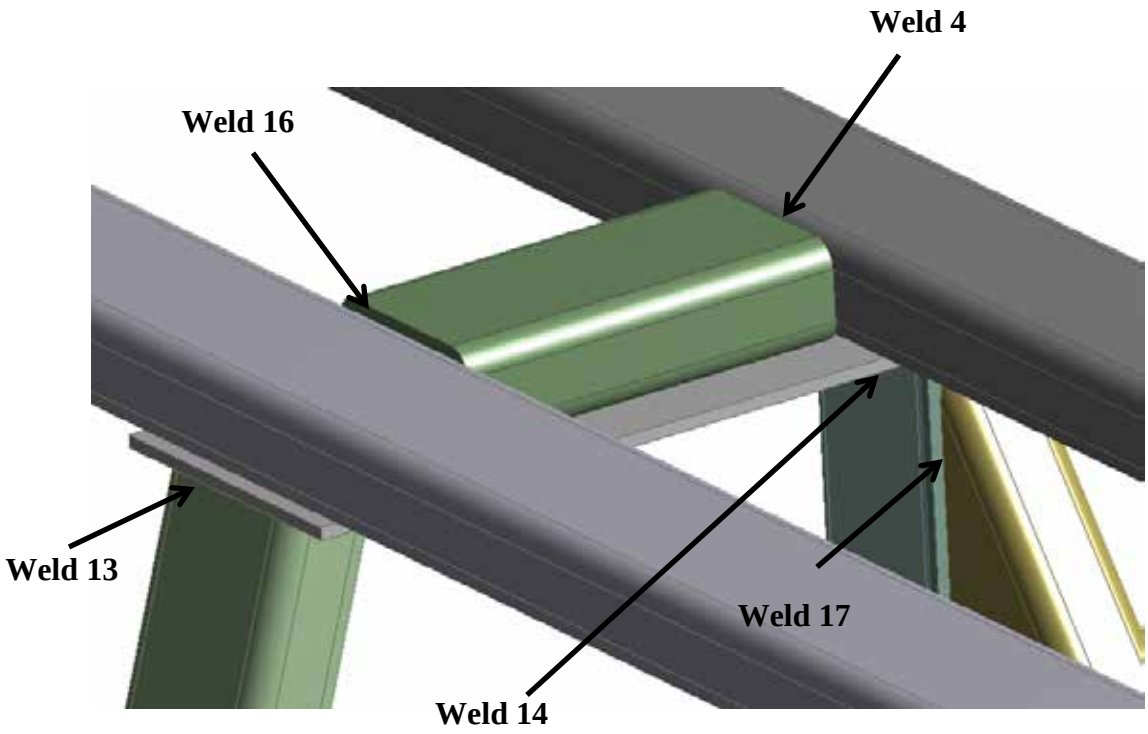

Figure 7.

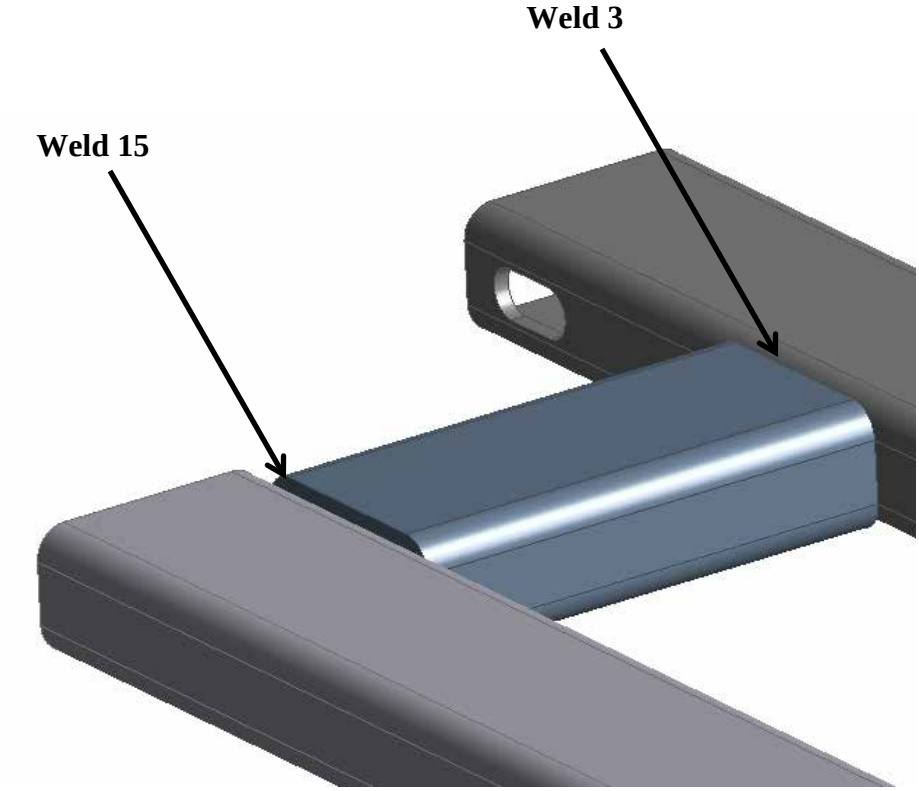

Figure 8

Table III. Forces and Moments on Welds

Weld	Fx (lbs)	Fy (lbs)	Fz (lbs)	Mx (lb-in)	My (lb-in)	Mz (lb-in)	Force (vector sum, lbs)	Moment (vector sum, lb-in)
1	24	-400	-15	3038	195	-345	401	3064
2	32	-115	427	1246	256	-627	444	1418
3	35	-7	8	17	186	-79	37	203
4	-72	-30	304	136	109	226	314	286
5	-259	-280	-20	-348	-145	-1279	382	1333
6	-200	642	-76	103	7	-88	677	136
7	-44	527	-4	-24	162	2076	529	2082
8	174	240	27	-11	238	-1545	298	1563
9	-174	-236	-27	11	-102	353	295	368
10	-191	-530	2	24	-34	-2060	563	2060
11	-17	-43	-11	-544	321	1384	47	1521
12	2	-315	-14	-474	-7	41	316	476
13	14	-28	8	-481	76	-54	32	490
14	-62	245	6	-752	-123	-1324	252	1527
15	-35	1	-8	13	96	79	36	125
16	50	67	178	77	101	-267	196	296
17	11	-72	3	-272	-138	-943	73	991

Table IV. Comparison of Required and Available Weld Capacity

Weld	Force on Weld (lbs/in) from forces	Force on Weld (lbs/in) from moments	Total Force on Weld (lbs/in)	Capacity of Weld (lbs/in)
1	33	270	304	3700
2	55	377	433	3700
3	18	123	142	3700
4	157	479	636	3700
5	48	121	169	3700
6	113	50	163	3700
7	44	175	219	3700
8	25	142	167	3700
9	49	155	204	3700
10	47	160	207	3700
11	4	182	186	3700
12	39	150	190	3700
13	4	164	168	3700
14	32	464	496	3700
15	18	97	115	3700
16	98	356	455	3700
17	9	239	248	3700

Stresses on Base Metal

All members are A36 steel or better. The maximum allowable shear stress on the base metal is taken as $0.4F_y$, or 14400 psi. The allowable force on the base metal based on shear stress is 0.25(14400) = 3600 lbs/in. This is nearly the same as the weld metal capacity, and greater than the load on any weld. This approach is very conservative, since it neglects that most members are A500 steel, and that the normal stress allowable for the base metal is considerably larger than its shear allowable.

Bolted Connection – Frame to Iron

The bolted connection between the muon catcher and the frame base is shown in Fig. 9. Forces and moments on the connection are given in Table III.

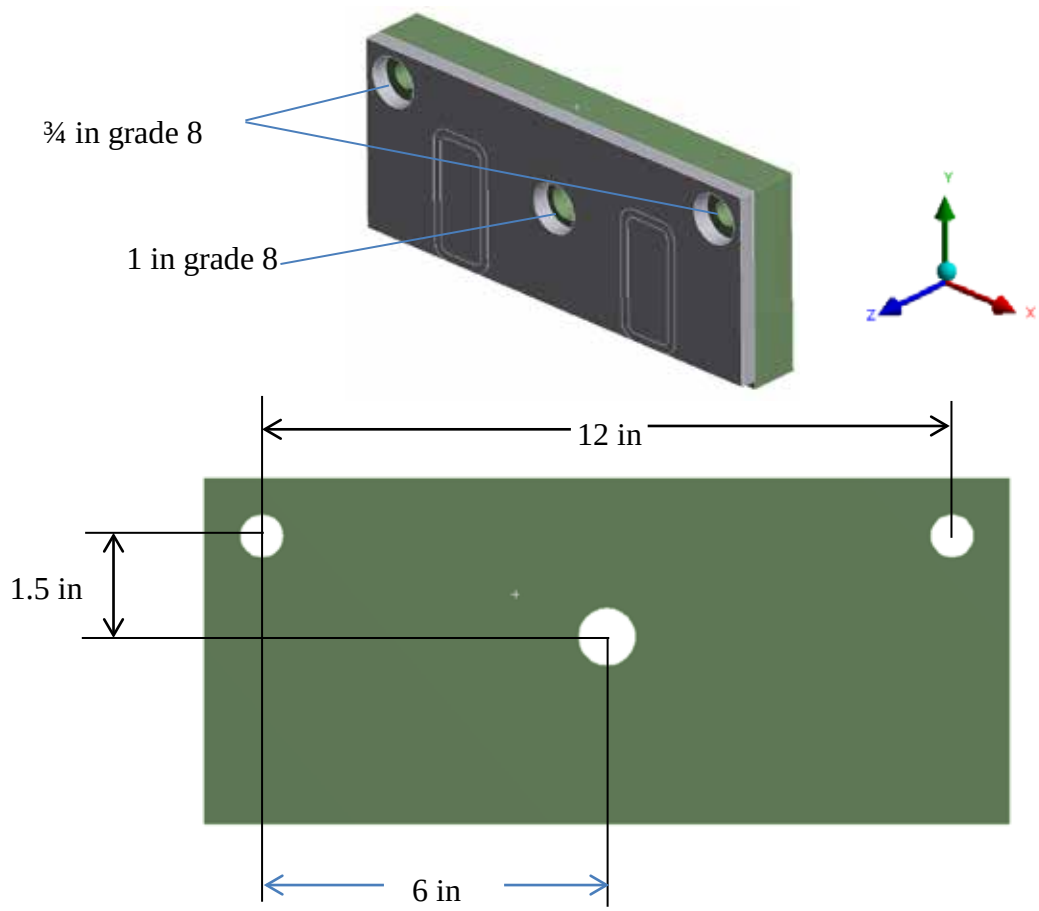

Figure 9. Bolted connection between muon catcher and frame

Table V. Force and Moments on Bolted Connections

Fx (lbs)	Fy (lbs)	Fz (lbs)	Mx (lb-in)	My (lb-in)	Mz (lb-in)
825	**2470**	**390**	**5500**	**13520**	**13455**

The stress areas of the 1 inch and ¾ inch grade 8 bolts are 0.606 in^2 and 0.334 in^2, respectively, giving a total area of 1.94 in^2.

The in-plane shear force is the vector sum of Fx and Fz, or 2604 lbs. The shear stress on the bolts in the XY plane is then 2604/1.94 = 1342 psi. Per AISE, the maximum allowable shear on an A490 bolt (identical steel to the Grade 8) when threads are not excluded from the shear plane is 28 ksi.

Fz produces tension/compression in the bolts. The tensile stress resulting from the Fz is 390/1.94 = 201 psi. This is negligible.

Additional shear stress is produced by the torque Mz. Assuming that the center moment takes no moment, and represents the centroid about which the torque acts, the shear on the bolts may be calculated. The moment arm of each bolt is sqrt($6^2 + 1.5^2$) = 6.18 in. Letting F_s be the shear force, then the torque produced by the bolts is $T_b = 2(6.18)F_s$. Setting T_b = 13520 lb-in gives F_s = 1094 lbs on each bolt. This produces a stress of 1094/0.334 = 3275 psi. Combined with the shear stress from the in-plane forces, the total shear on the bolt is 4617 psi. This is well below the allowable of 28 ksi.

The moments Mx and My produces additional tension/compression in the bolts. If the center hole is used as the moment summation point, then $Mx = 2(1.5)F_t$, where F_t is the tension in one ¾ in bolt. Substituting for Mx gives F_t = 1833 lbs, for a stress of 1833/0.334 = 5488 psi.

Again using the center hole as the summation point, $My = 2(6)F_t$. Substituting for My give F_t = 1127 lbs, for a bolt stress of 1127/0.334 = 3374 psi.

Summing the two tensile stresses gives a total tensile stress of 3374 + 5488 = 8862 psi. Per AISC, the maximum allowable tension in an A490 bolt is 54 ksi.

Muon Catcher Steady Rest

The steady-rest consists of two triangular frames which bolt to the ears on the muon catcher and provide support during short-time operations such as detaching the crane hook, and attaching the cart.

E. Villegas has calculated a maximum force of 309 lbs on each ear. The ears are welded to the muon catcher iron with a 3/8 inch fillet weld around the perimeter. The total length of weld is then 18 inches.

Considering the weld as two 8 inch lines, separated by 1 inch, the primary moment produced by the 309 lbs will act on a weld with a section modulus of 8 in^2. For a lever arm of 7.5 inches (the offset from the steady rest bolt to the ear weld), a moment of 309(7.5) = 2317 lb-in acts on the weld. Dividing this by the section modulus gives a required weld strength of 2317/8 = 290 lbs/in. This is well below the available weld strength of 5565 lbs/in.

The triangular frames consist of three 4x4x0.25 A36 steel angles. These angles have a cross sectional area of 1.94 in^2. The joints are fully welded along all available perimeter with ¼ inch fillet welds.

The axial force in the 60 degree leg is 309/cos(60) = 618 lbs. This produces a stress of 618/1.94 = 318 psi. From inspection it is clear that the steady rest and its wells have more than sufficient strength for the loads anticipated.

I-DEAS 12 NX Series m4: I-DEAS Visualizer

465_ND_3X2_MC_FRAME_WDNT_FEM
CRANE_SUSPENDED_VERT_1125_LB_PVC_LOAD
STRESS Von Mises Averaged Top shell
Min: 4.80E-02 lbf/in^2 Max: 9.80E+02 lbf/in^2
B.C. 1,DISPLACEMENT_1,LOAD SET 1
DISPLACEMENT XYZ Magnitude
Min: 0.00E+00 in Max: 9.29E-04 in
Part Coordinate System

SPREADER BAR PICK POINTS
(4) 1-8 TAPPED HOLES

STRESS AT WELD LINES
fvm = 980 PSI
w = fvm/Fw = 980/21600 = .045"

BASED ON 4" THICK STEEL PLATE, WELD SIZE WILL BE 1/2" AND LENGTH 4" ON EACH CORNER

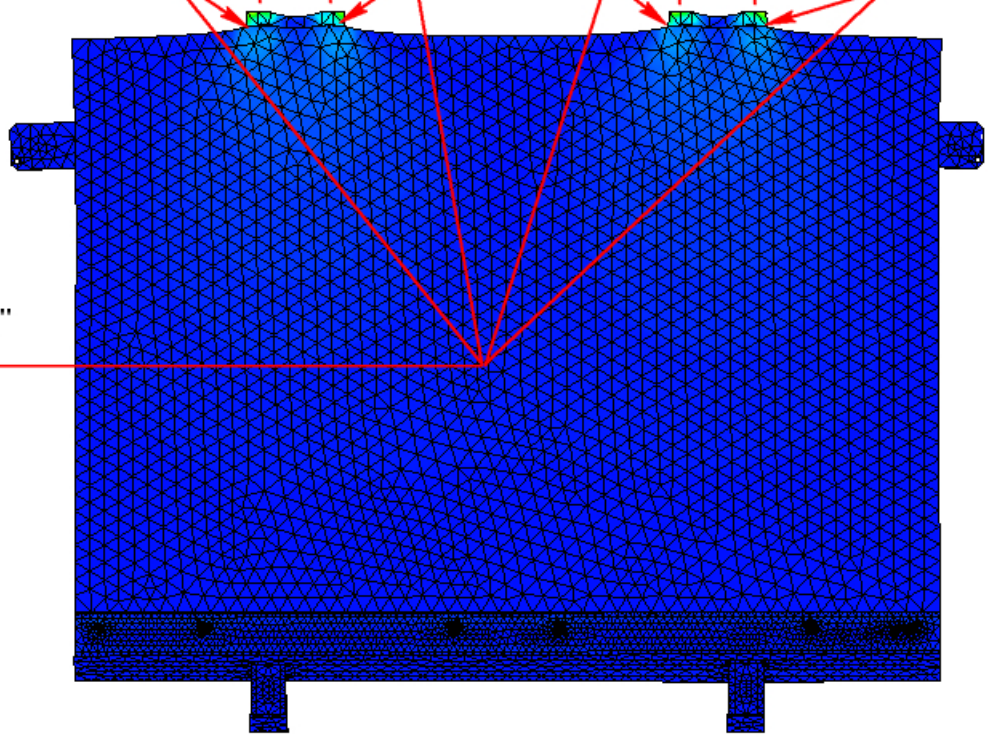

lbf/in^2
9.80E+02
9.31E+02
8.82E+02
8.33E+02
7.84E+02
7.35E+02
6.86E+02
6.37E+02
5.88E+02
5.39E+02
4.90E+02
4.41E+02
3.92E+02
3.43E+02
2.94E+02
2.45E+02
1.96E+02
1.47E+02
9.80E+01
4.90E+01
4.80E-02

ND 3X2 MC FRAME WELDMENT
CRANE SUSPENDED 1125# PVC
#493558
PAGE #2

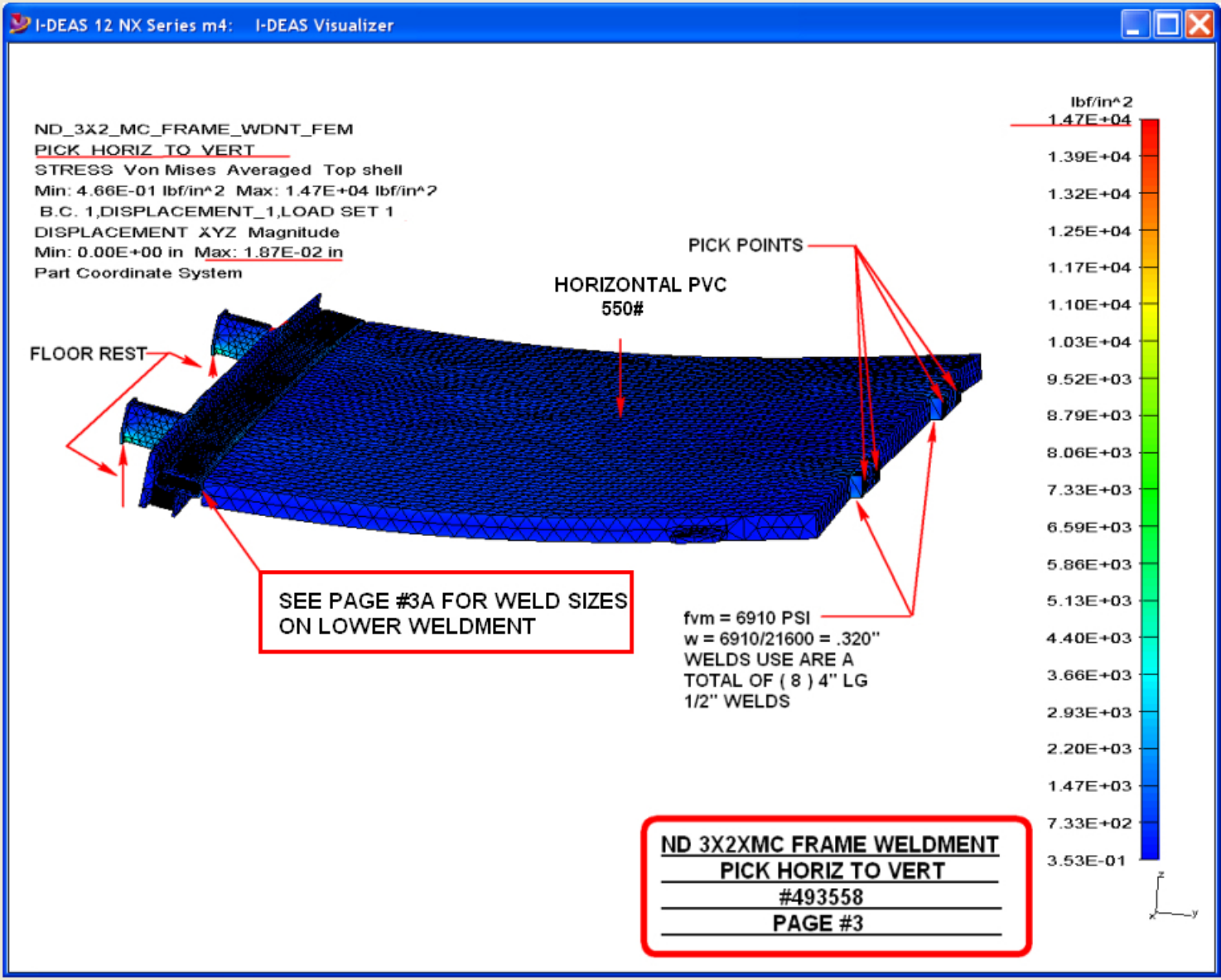
I-DEAS 12 NX Series m4: I-DEAS Visualizer
ND_3X2_MC_FRAME_WDNT_FEM
PICK HORIZ TO VERT
STRESS Von Mises Averaged Top shell
Min: 4.66E-01 lbf/in^2 Max: 1.47E+04 lbf/in^2
B.C. 1,DISPLACEMENT_1,LOAD SET 1
DISPLACEMENT XYZ Magnitude
Min: 0.00E+00 in Max: 1.87E-02 in
Part Coordinate System
PICK POINTS
HORIZONTAL PVC
550#
FLOOR REST
SEE PAGE #3A FOR WELD SIZES
ON LOWER WELDMENT
fvm = 6910 PSI
w = 6910/21600 = .320"
WELDS USE ARE A
TOTAL OF (8) 4" LG
1/2" WELDS
lbf/in^2
1.47E+04
1.39E+04
1.32E+04
1.25E+04
1.17E+04
1.10E+04
1.03E+04
9.52E+03
8.79E+03
8.06E+03
7.33E+03
6.59E+03
5.86E+03
5.13E+03
4.40E+03
3.66E+03
2.93E+03
2.20E+03
1.47E+03
7.33E+02
3.53E-01
ND 3X2XMC FRAME WELDMENT
PICK HORIZ TO VERT
#493558
PAGE #3

I-DEAS 12 NX Series m4: I-DEAS Visualizer

ND_3X2_MC_FRAME_WDNT_FEM
PICK_HORIZ_TO_VERT
STRESS Von Mises Averaged Top shell
Min: 4.66E-01 lbf/in^2 Max: 1.47E+04 lbf/in^2
B.C. 1,DISPLACEMENT_1,LOAD SET 1
DISPLACEMENT XYZ Magnitude
Min: 0.00E+00 in Max: 0.00E+00 in
Part Coordinate System

MATERIAL: ASTM A500 GR B TUBING
F = 0.6 X 47000 = 27,600 PSI
ALLOWED

ASTM A36 STEEL BARS
F = 0.6 X 36000 = 12,000 PSI
ALLOWED

WELD METAL: E70XX
Fw = 0.3 X 72000 = 21,600 PSI
ALLOWED

WELD SIZE:
wc = fvm/Fw

CENTER DISTANCE:
CL = Lw x Fw X w / fvm

WHERE wc = CONTINUOUS WELD
w = WELD SIZE USED
Lw = WELD LENGTH
fvm = DESIGN STRESS
CL = SKIP WELD
CENTER DISTANCE

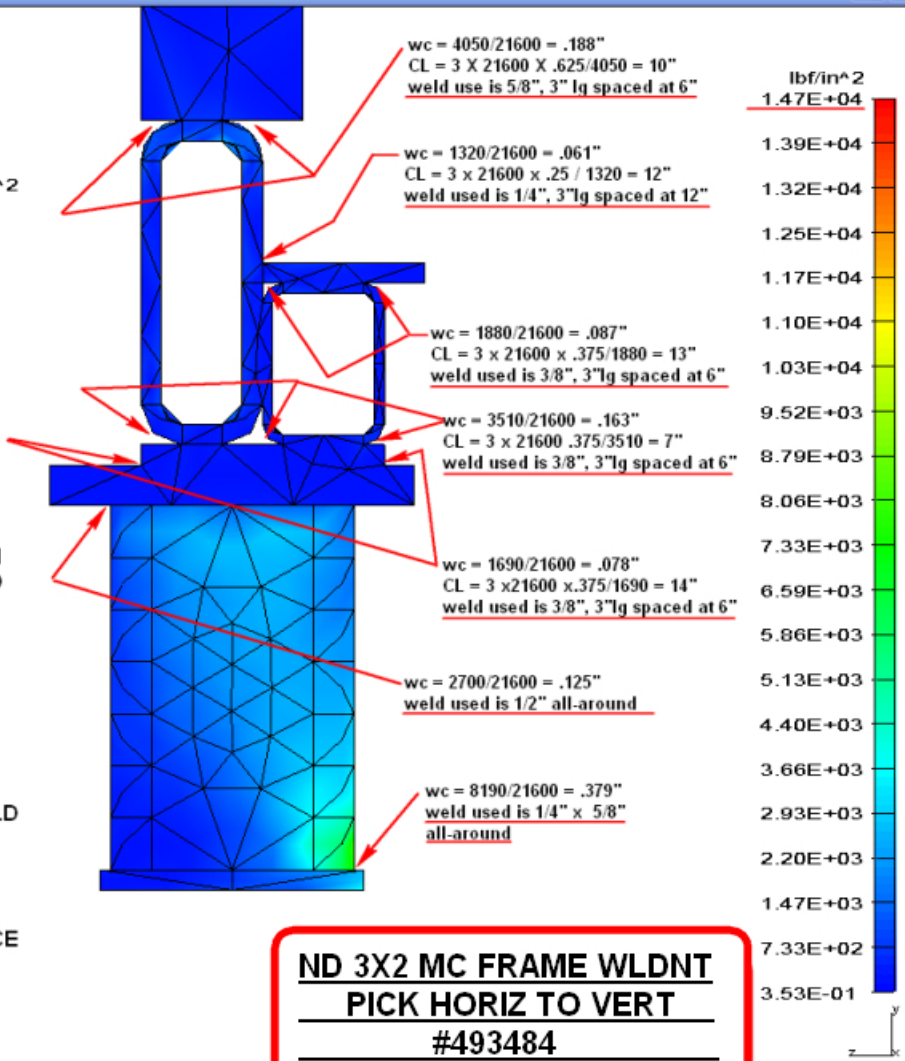

ND 3X2 MC FRAME WLDNT
PICK HORIZ TO VERT
#493484
PAGE #3A

I-DEAS 12 NX Series m4: I-DEAS Visualizer

465_ND_3X2_MC_FRAME_WDNT_FEM
FREE_STANDING
STRESS Von Mises Averaged Top shell
Min: 1.87E-03 lbf/in^2 Max: 3.87E+03 lbf/in^2
B.C. 1,DISPLACEMENT_1,LOAD SET 1
DISPLACEMENT XYZ Magnitude
Min: 0.00E+00 in Max: 3.30E-03 in
Part Coordinate System

HORIZONTAL & VERTICAL MODULE LOAD = 3355#

STABILIZING EARS
RESTAINED IN Z
DIRECTION ONLY

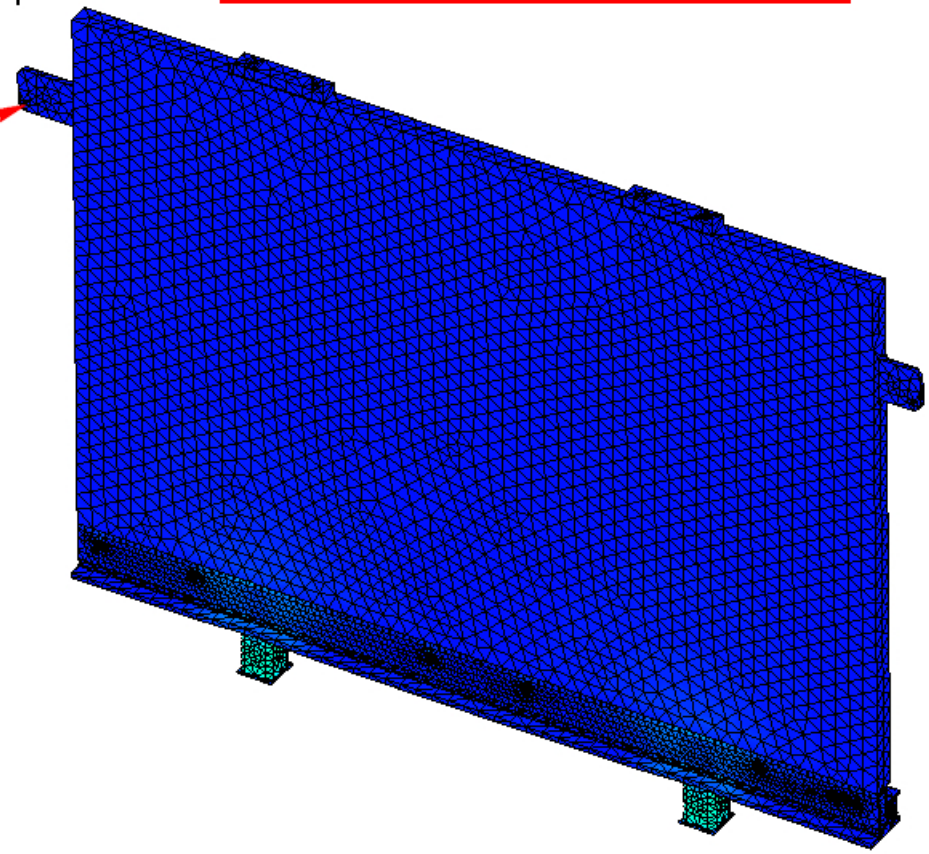

lbf/in^2
3.87E+03
3.68E+03
3.48E+03
3.29E+03
3.10E+03
2.90E+03
2.71E+03
2.52E+03
2.32E+03
2.13E+03
1.94E+03
1.74E+03
1.55E+03
1.35E+03
1.16E+03
9.68E+02
7.74E+02
5.81E+02
3.87E+02
1.94E+02
1.87E-03

ND 3X2 MC FRAME WELDMENT
FREE STANDING
#493558
PAGE #4

I-DEAS 12 NX Series m4: I-DEAS Visualizer

465_ND_3X2_MC_FRAME_WDNT_FEM
10%_SEISMIC_LOAD_2198_LB
STRESS Von Mises Averaged Top shell
Min: 6.66E-02 lbf/in^2 Max: 1.43E+04 lbf/in^2
B.C. 1,DISPLACEMENT_1,LOAD SET 1
DISPLACEMENT XYZ Magnitude
Min: 0.00E+00 in Max: 1.71E-01 in
Part Coordinate System

STABILIZING EARS
RESTRAINED IN
Z DIRECTION ONLY

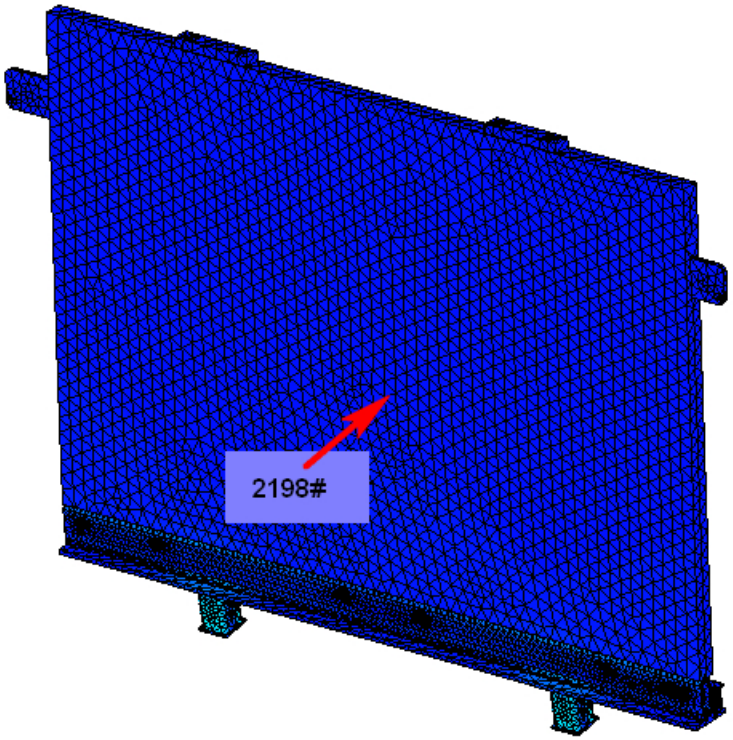

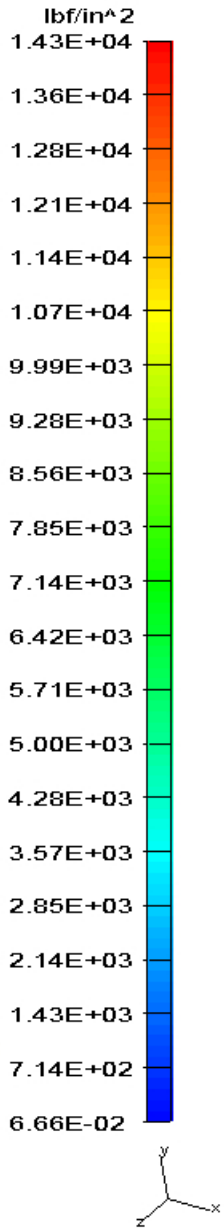

STEELWT==========18,625#
HORIZONTAL PVC========= 550
HORIZ SCINTILLATOR====== 1,098
VERTICAL PVC========== 575
VERT SCINTILLATOR====== 1132
21,980#

.10 X 2198 = 2,198# IN Z DIRECTION

ND 3X2XMC FRAME WELDMENT
FREE STANDING PLUS SEISMIC LOAD
3493558
PAGE #5

I-DEAS 12 NX Series m4: I-DEAS Visualizer

ND_3X2_MC_FRAME_WDNT_FEM
EAR_PICK HORIZ TO VERT
STRESS Von Mises Averaged Top shell
Min: 5.32E+00 lbf/in^2 Max: 7.01E+04 lbf/in^2
B.C. 1,DISPLACEMENT_1,LOAD SET 1
DISPLACEMENT XYZ Magnitude
Min: 0.00E+00 in Max: 8.69E-02 in
Part Coordinate System

fvm = 20,600 PSI AT STABILIZING EAR WELD LINES

DO NOT PICK FROM EARS

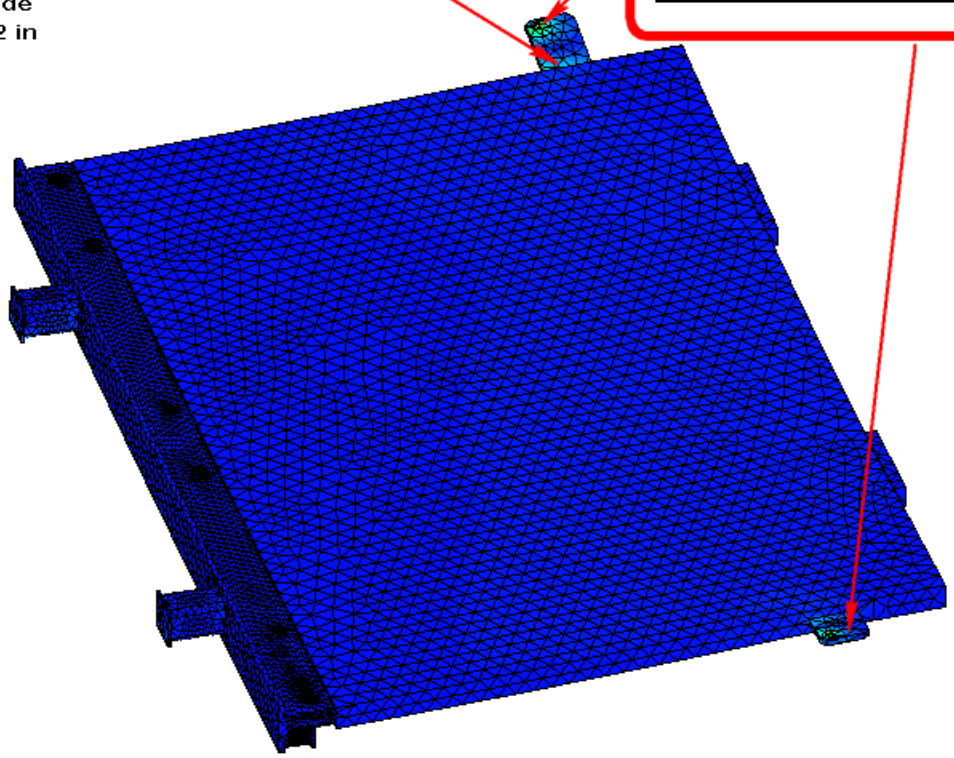

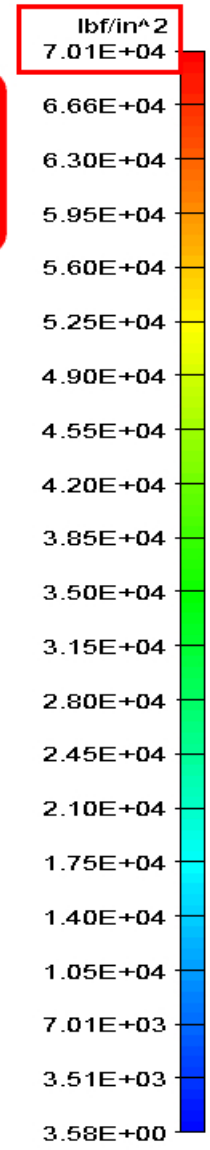

ND 3X2 MC FRAME WELDMENT
EAR PICK HORIZ TO VERT
NOT GOOD
#493558
PAGE #6

I-DEAS 12 NX Series m4: PPD TDM : 1_MODELFILES : C:\PPD_IDM_PPD-117870\EMV_NOvA_ND_27_MARCH_2013.mf1

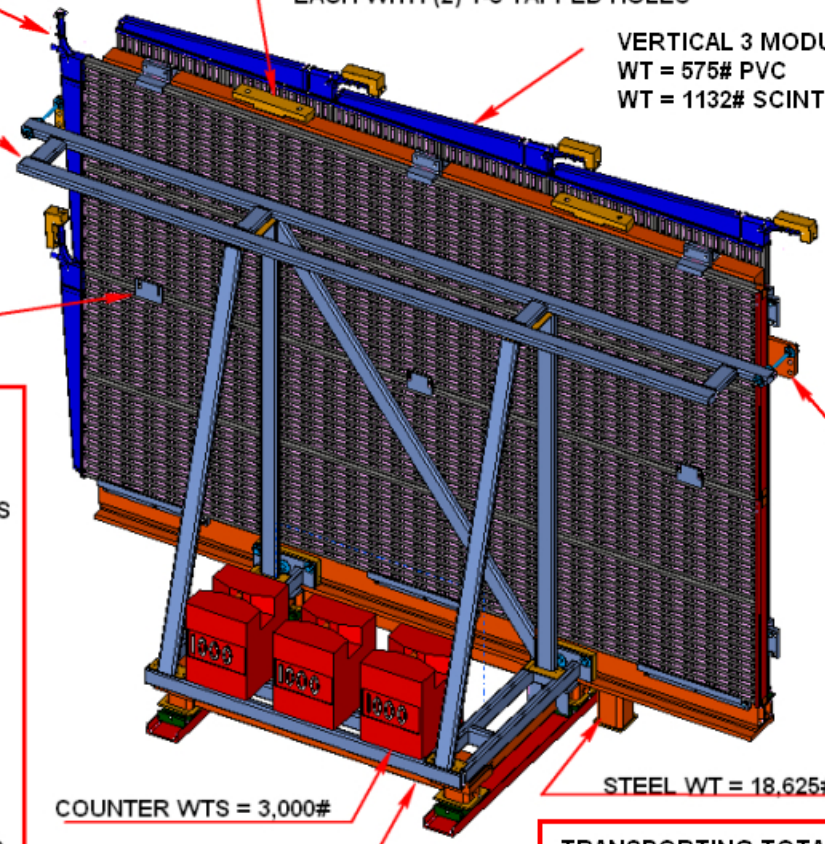

MATERIAL:
ASTM A500 GR B TUBING
F = 0.6 X 46000 = 27,000 PSI
ALLOWED
ASTM A36 STEEL PLATE & BARS
F = 0.6 X 36000 = 21,600 PSI
ALLOWED

WELD METAL:
E70XX
Fw = 0.3 X 72000 = 21,600 PSI
ALLOWED

SEE BELOW FOR DIFFERENT
LOADING CONDITIONS

CRANE SUSPENDED=========PG#2
PICK HORIZ TO VERT======== PG#3
FREE STANDING==========PG#4
10% SIESMIC LOAD==========PG#5
EAR PICK HORIZ TO VERT==== PG#6
UPPER FRAME WELDNT======PG#7
TRNSPORT'G LOWER FRAME==PG#8

TRANSPORTING TOTAL WT = 23,790#
OPERATIONAL TOTAL WT = 21,980#

TRANSPORTING ND 3X2 MC MODULE
#493588
PAGE #1

I-DEAS 12 NX Series m4: I-DEAS Visualizer

465_TRANSPORTING_HALF_LOWER_FRAME_FEM

STRESS Von Mises Averaged Top shell
Min: 2.11E-01 lbf/in^2 Max: 6.37E+03 lbf/in^2
B.C. 1,DISPLACEMENT_1,LOAD SET 1
DISPLACEMENT XYZ Magnitude
Min: 0.00E+00 in Max: 2.07E-04 in
Part Coordinate System

MATERIAL: ASTM A500 GR B TUBING
F = 0.6 X 46000 = 27,000 PSI
ALLOWED
ASTM A36 STEEL PLATES
F= 0.6 X 36000 = 21,600 PSI
ALLOWED

WELD METAL: E70XX
Fw = 0.3 X 72000 = 21,600 PSI
ALLOWED

STRESS AT WELDED AREAS, fvm = 2060 PSI
w = fvm/Fw = 2060/21600 = .095"

ALL WELDS CALLED OUT ARE 1/4"

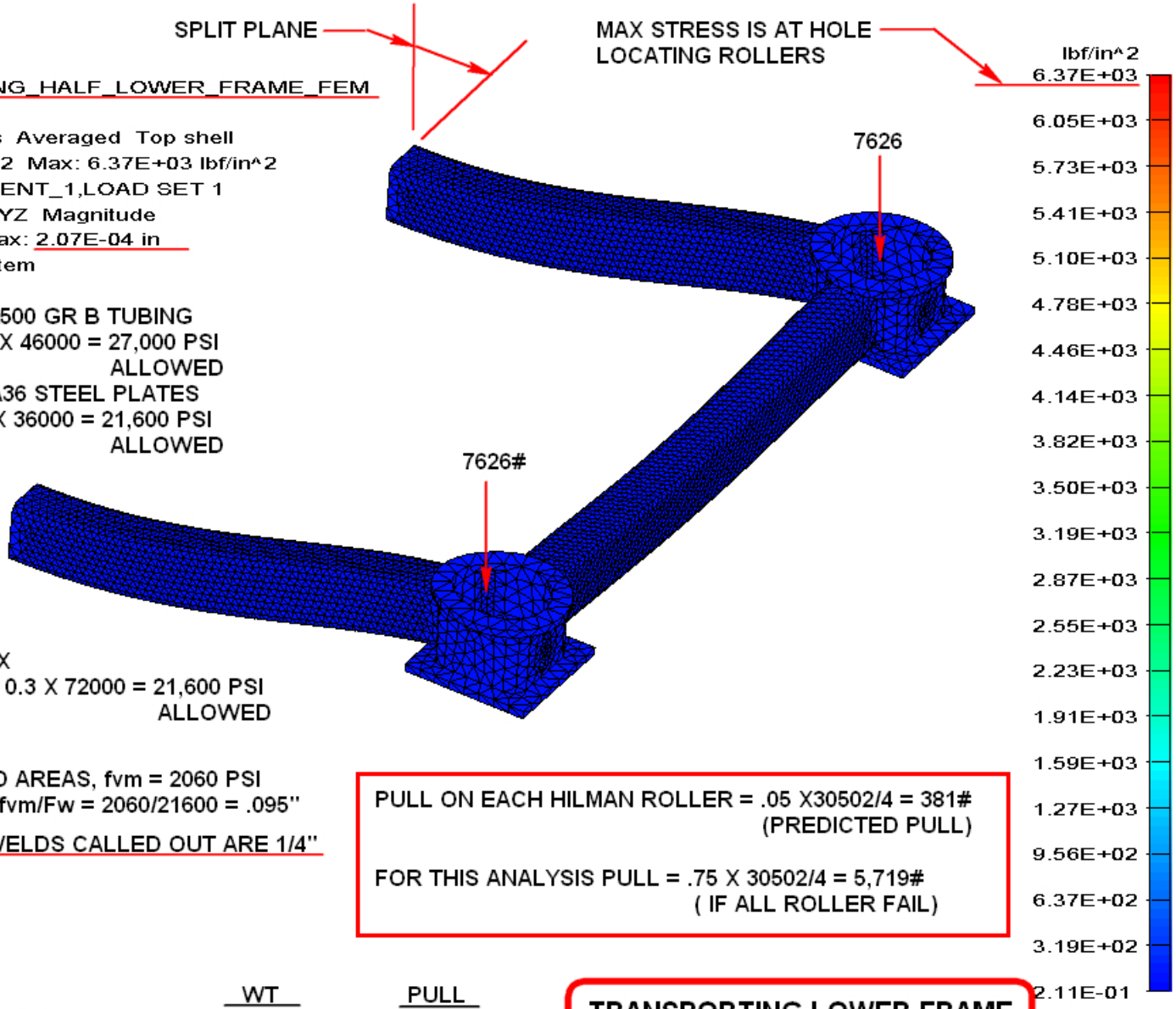

PULL ON EACH HILMAN ROLLER = .05 X30502/4 = 381#
(PREDICTED PULL)

FOR THIS ANALYSIS PULL = .75 X 30502/4 = 5,719#
(IF ALL ROLLER FAIL)

	WT	PULL
TRANSPORTING BLOCK	30,502#	1,525#
TRANSPORTING MUON CATCHER	24,515#	1,226#

TRANSPORTING LOWER FRAME
#489941
PAGE #8

I-DEAS 12 NX Series m4: I-DEAS Visualizer

465 TRANSPORTING UPPER FRAME FEM
1_DEG_SLOPE_NEG_Z_DIRECTION
STRESS Von Mises Averaged Top shell
Min: 1.26E-02 lbf/in^2 Max: 1.57E+04 lbf/in^2
B.C. 1,DISPLACEMENT_1,LOAD SET 1
DISPLACEMENT XYZ Magnitude
Min: 0.00E+00 in Max: 6.02E-02 in
Part Coordinate System

MATEREIAL:
ASTM A500 GR B
F = 0.6 X 46000 = 27,000 PSI
ALLOWED
ASTM A36 STEEL PLATES
F = 0.6 X 36000 = 21,600 PSI
ALLOWED

WELD METAL:
E70XX
Fw = 0.3 X 72000 = 21,600 PSI

WELD SIZE: w = fvm/Fw

NOTE: ALL WELDS CALLED OUT
ARE 1/4" EXCEPT IN THE
AREA CIRCLED IN RED

STEEL =========18,625#
HORIZ PVC====== 550
VERT PVC======= 575
19,750#

SAY 20,000#

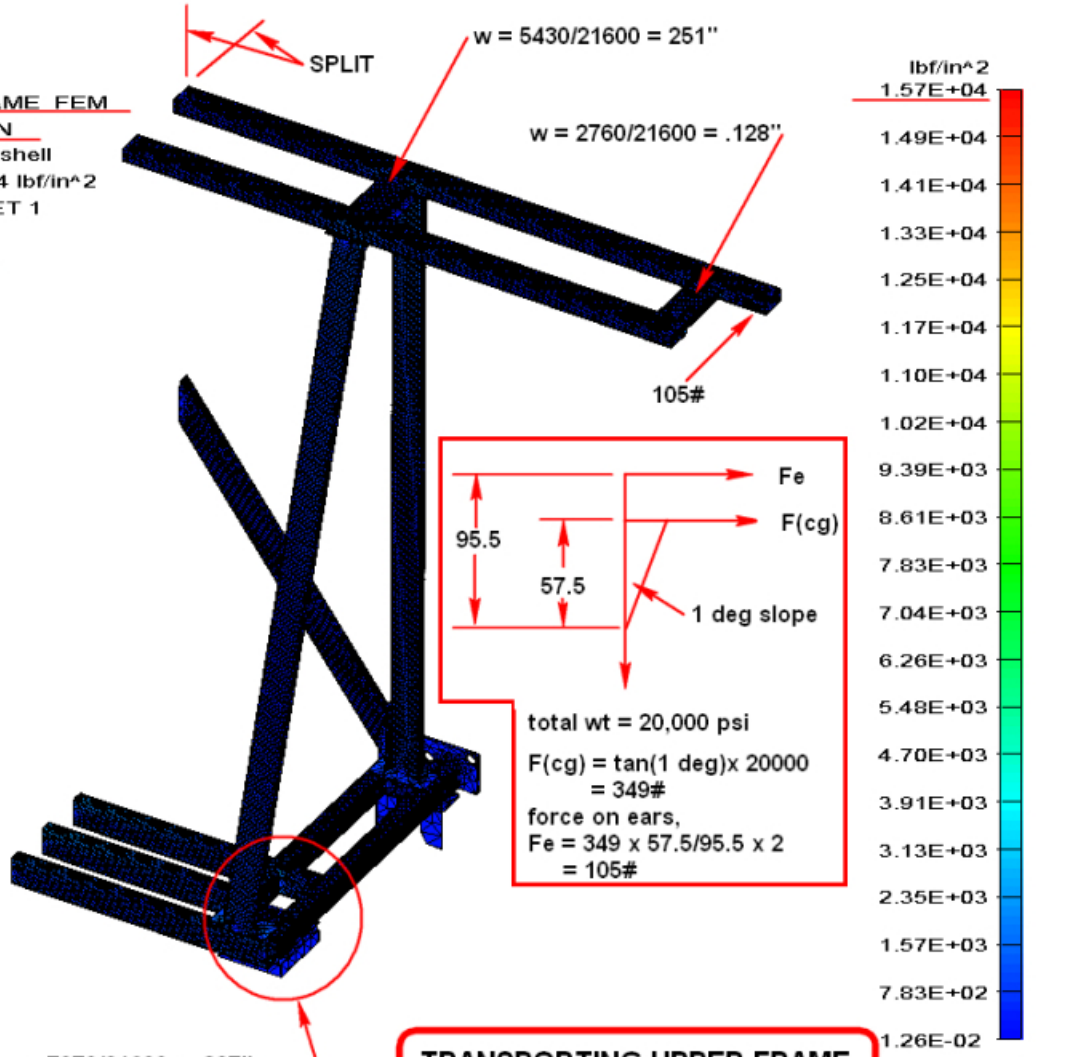

TRANSPORTING UPPER FRAME
#489943
PAGE #7