Fermilab

SDC SOLENOID DESIGN NOTE #185

TITLE: Report of the Honeycomb Vessel Buckling Test Result

AUTHOR: I. Ohno, IHI

DATE: Dec. 8, 1992

This design note is one of a series which represents the proceedings of the SDC solenoid subgroup meeting held in Japan on December 8-11, 1992. The plan and purpose of the meeting was to:

- Look at the prototype coil winding and honeycomb vessel R&D in Japan
- Reports of technical progress from each group
- Plan and schedule for the prototype magnet assembly and test
- Discussions on design of the SDC solenoid power supply
- Discussions on cryogenic design for the SDC solenoid
- Discussions on responsibilities for the cryogenics fabrication
- Response to the report of the DOE review sub-committee
- Publications and presentations of the technical progress

SDC Solenoid Subgroup Meeting in Japan

Report of the Honeycomb Vessel Bucking Test Result

I. Ohno (IHI)

Dec. 8, 1992

Contents

- Introduction of Honeycomb Vessel R&D
  - Honeycomb R&D Vessel
  - Fabrication Flow
  - Outline of Buckling Strength Tests

(Tour of Honeycomb Vessel)

- Fabrication & Test Results
  - Bending of Honeycomb Panels
  - Tolerance in Diameter of Outer Vessel
  - Stiffness Test
  - Buckling Strength Test

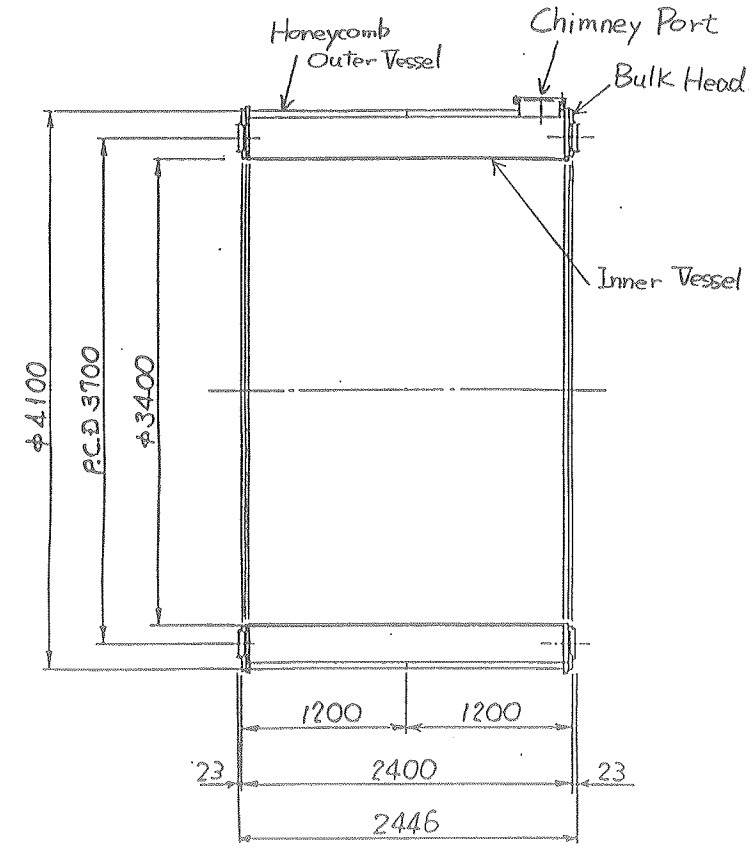

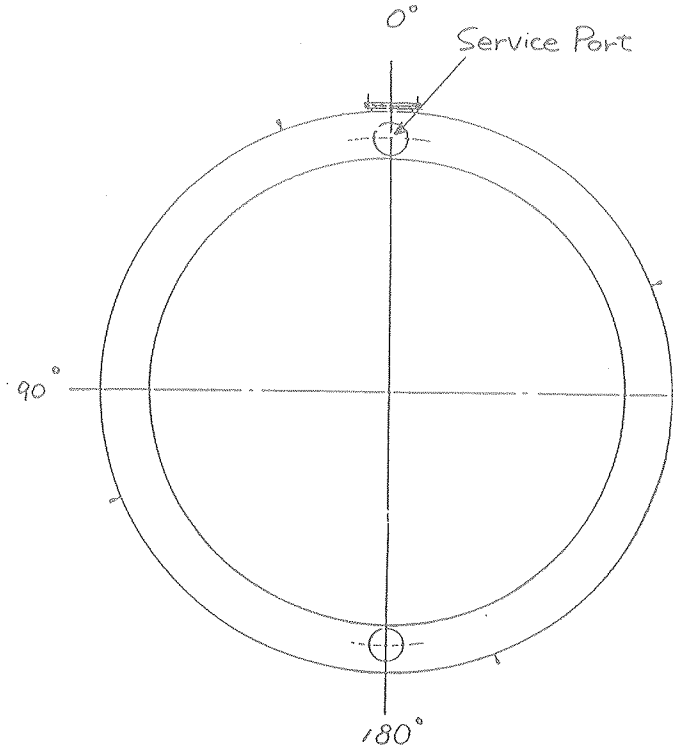

Honeycomb R&D Vessel

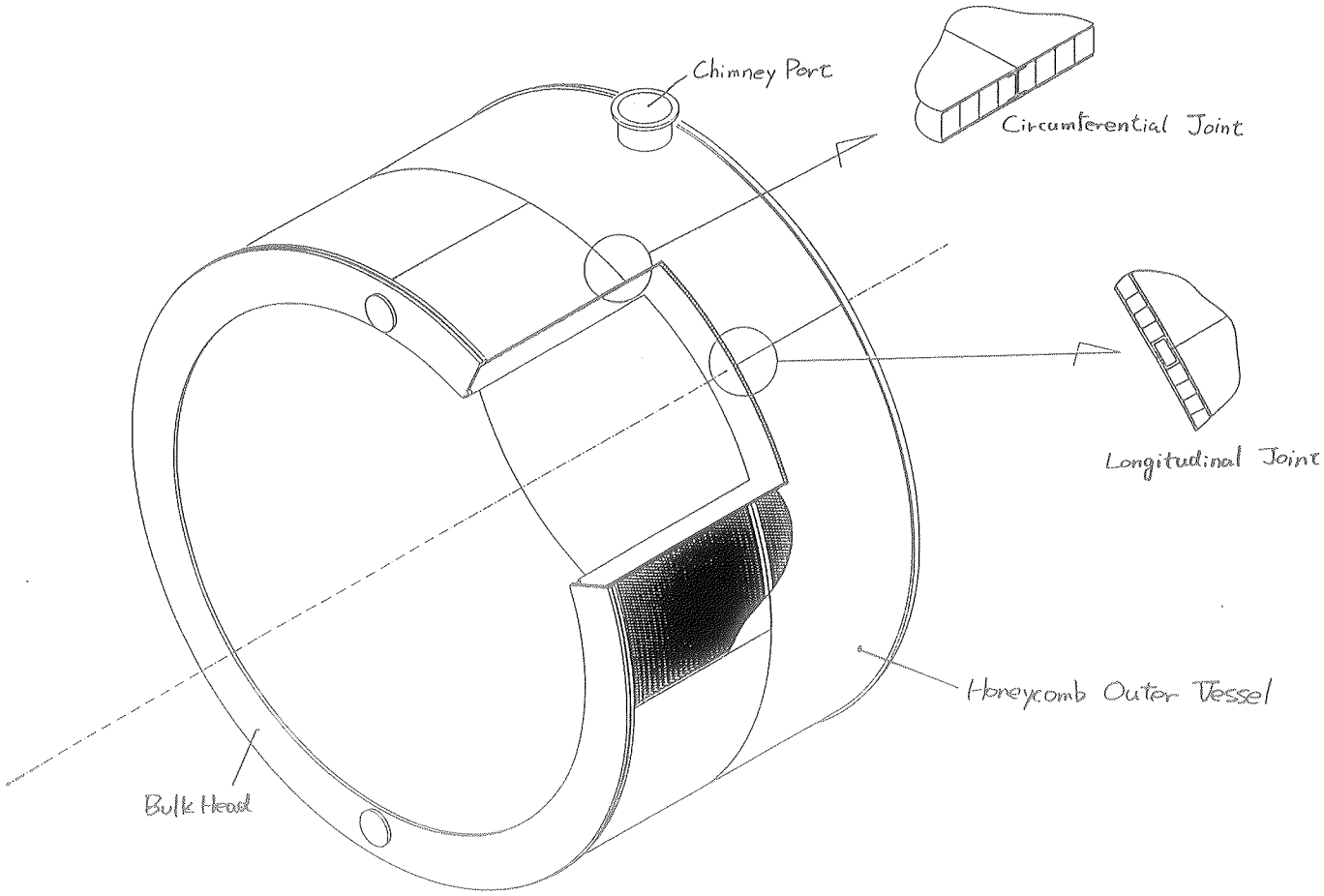

Honeycomb R&D Vessel

Chimney Port Detail

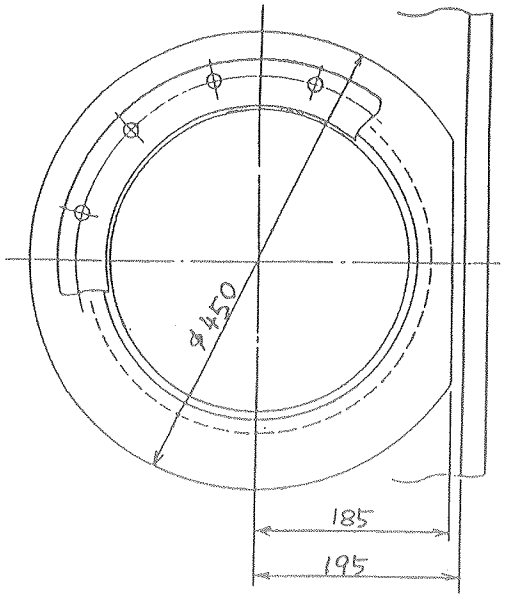

D-D 矢視

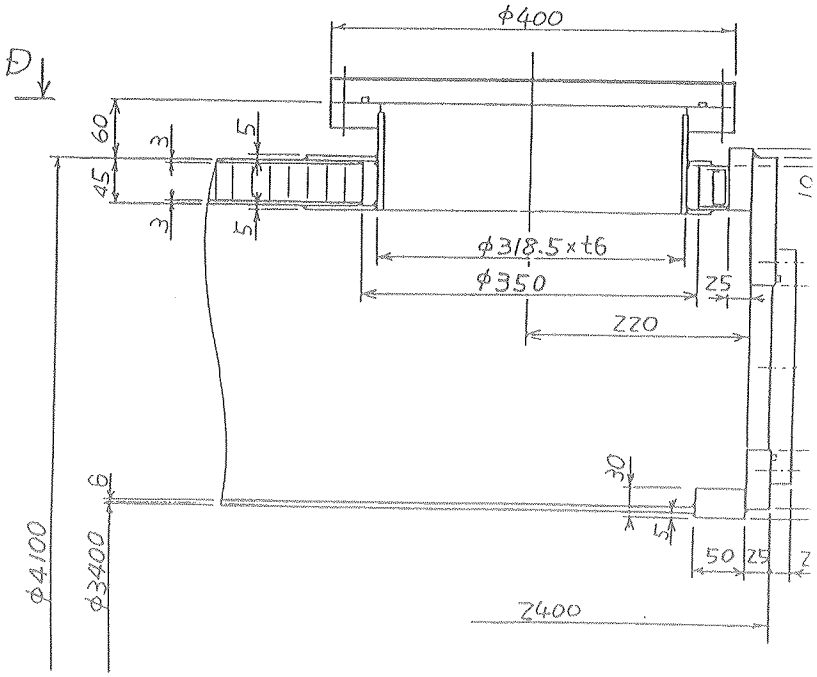

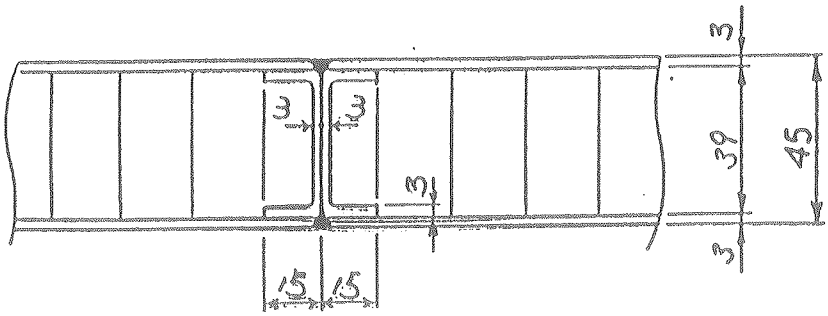

Circumferential Joint

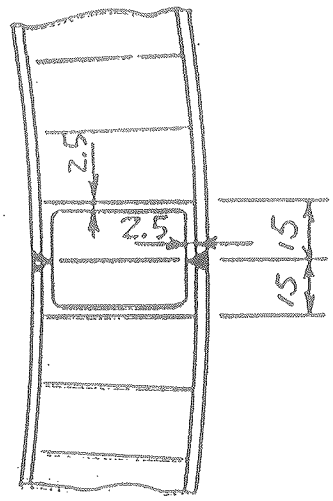

Longitudinal Joint

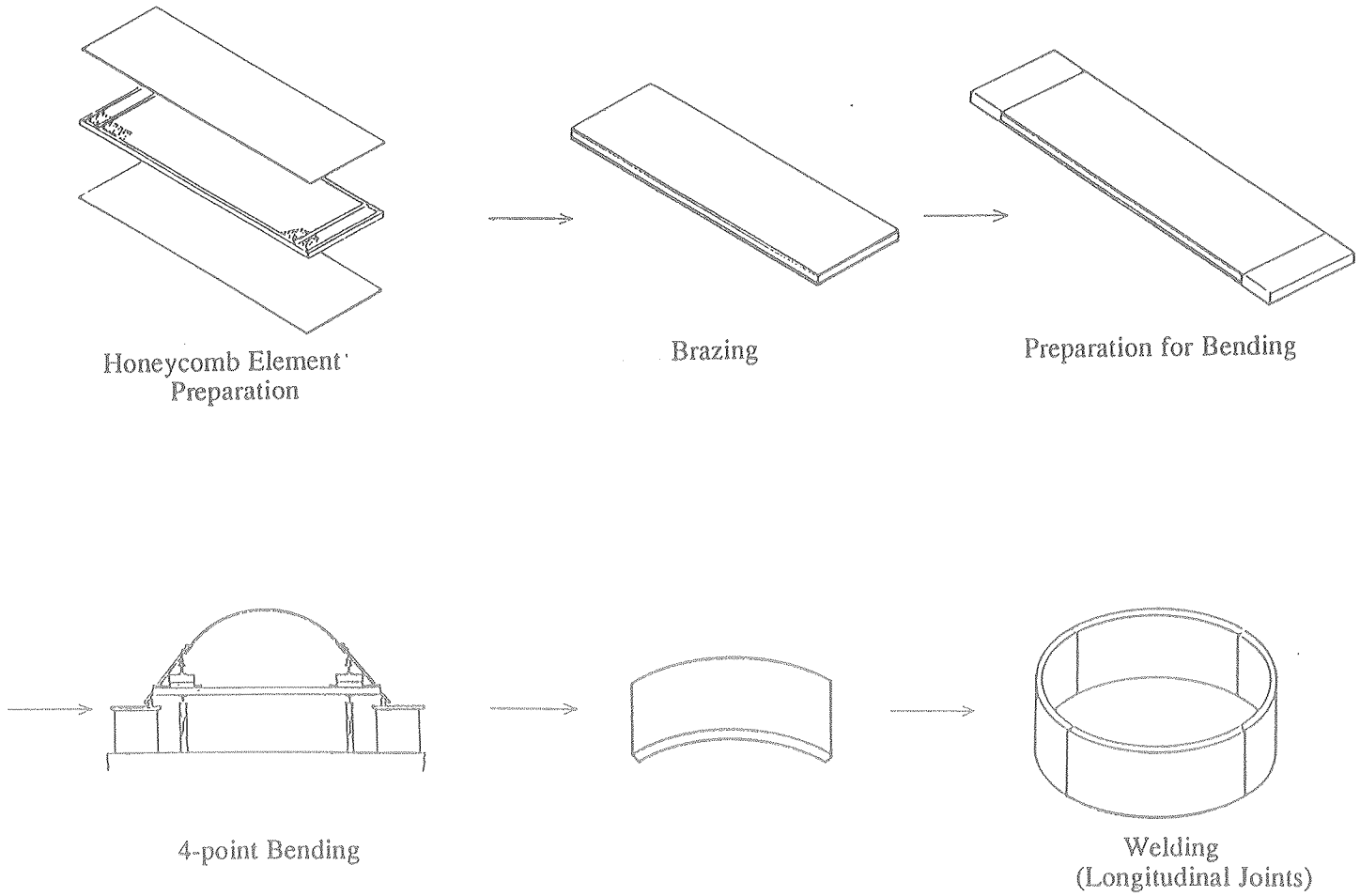

Fabrication Flow Chart
for the Honeycomb Outer Vacuum Wall (1/2)

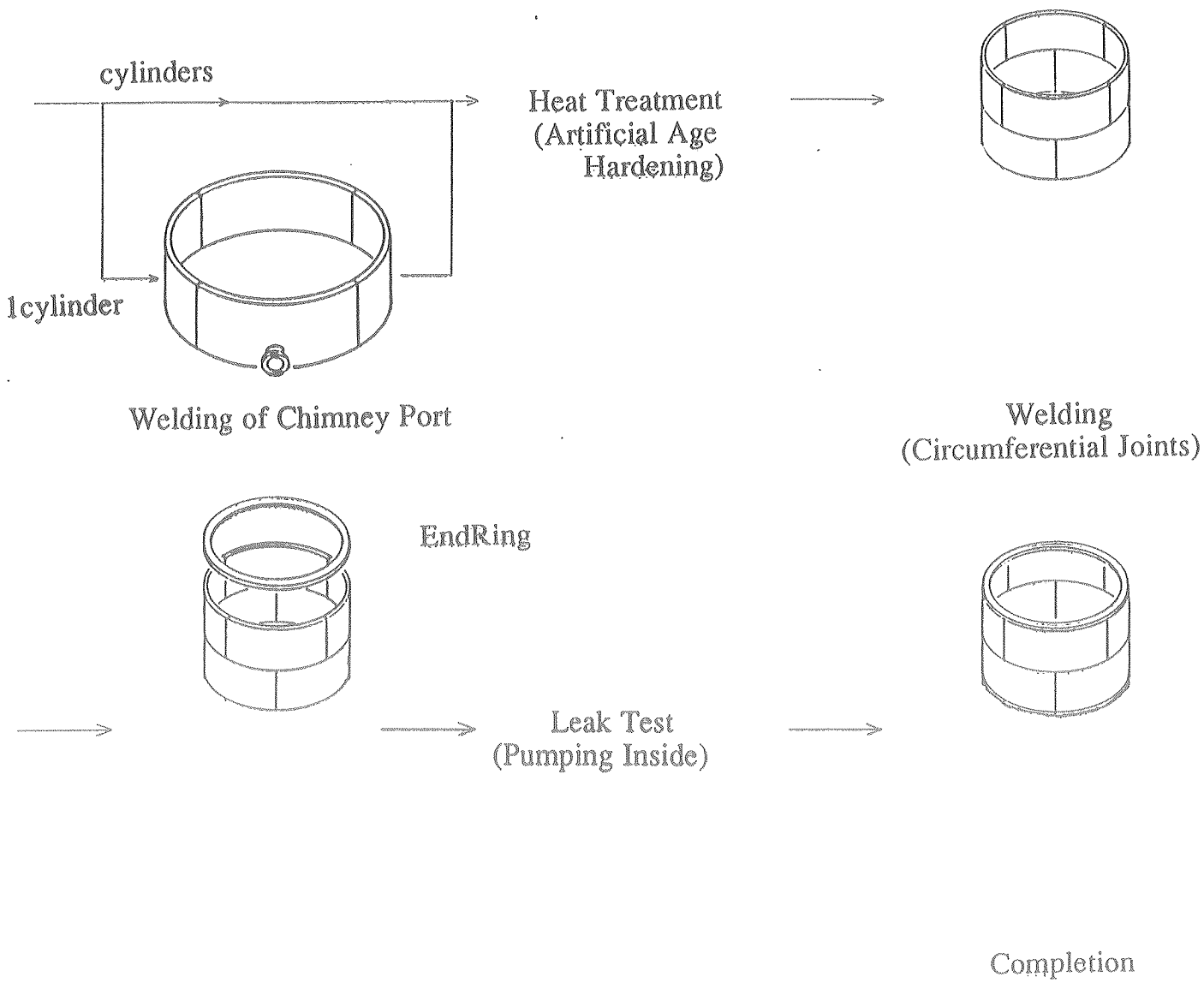

Fabrication Flow Chart
for the Honeycomb Outer Vacuum Wall (2/2)

	3 POINT BENDING with Bending Roller	4 POINT BENDING
Concept	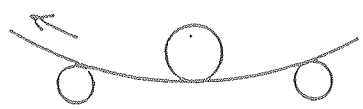	
Shearing Force Distribution	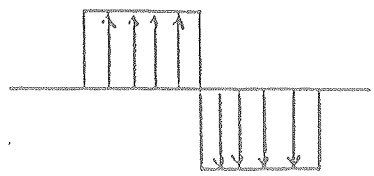	
Bending Moment Distribution	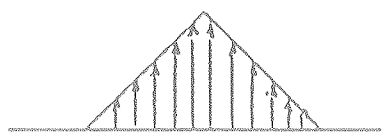	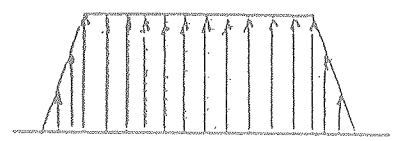
Possibility of Cores Collapsed	Expected	None
Possibility of Shearing Deformation	Expected	None
Bending Size	Long	Limited

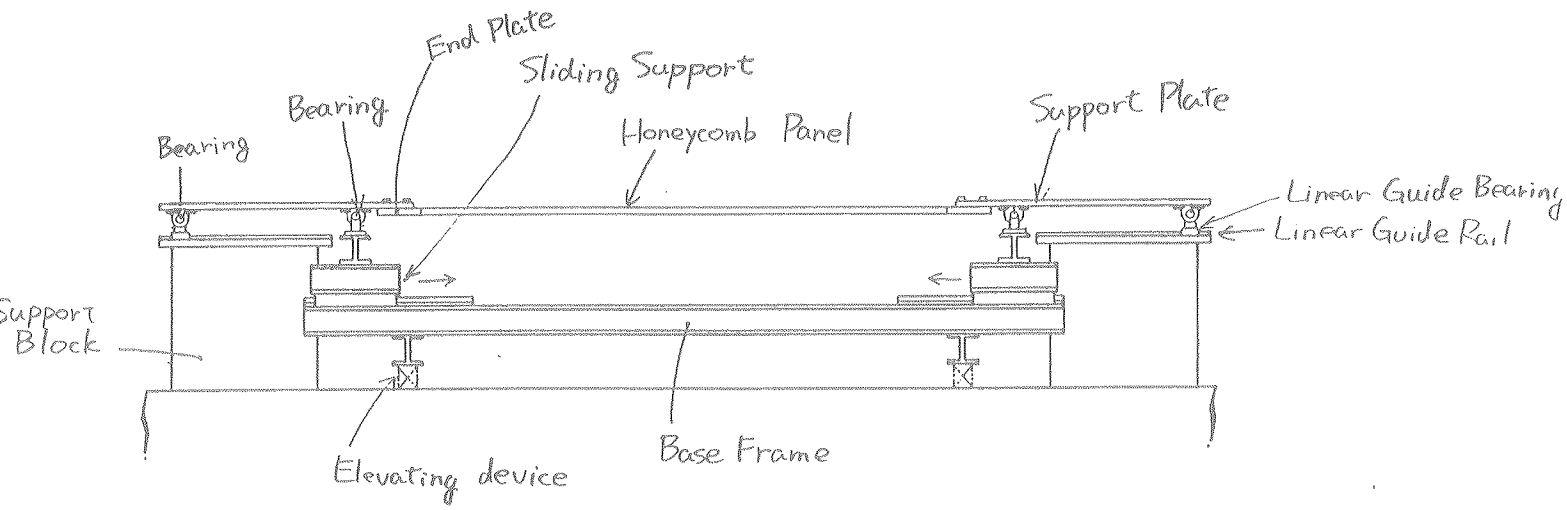

4 point Bending Jig

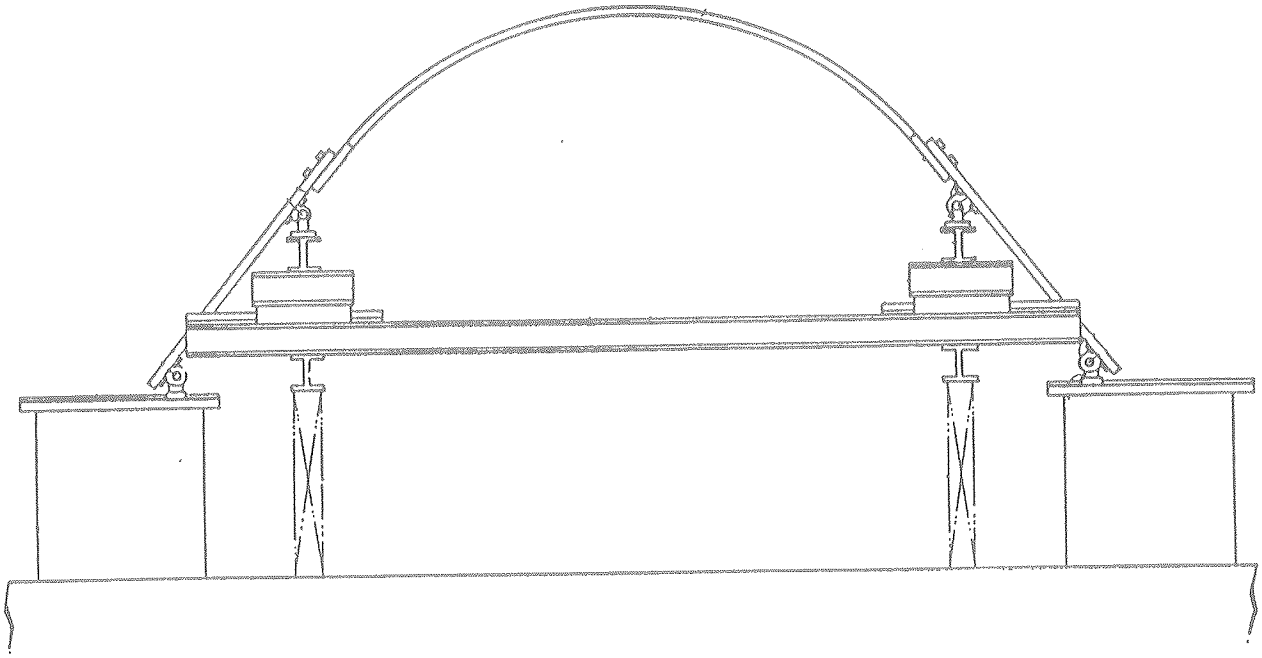

In Bending

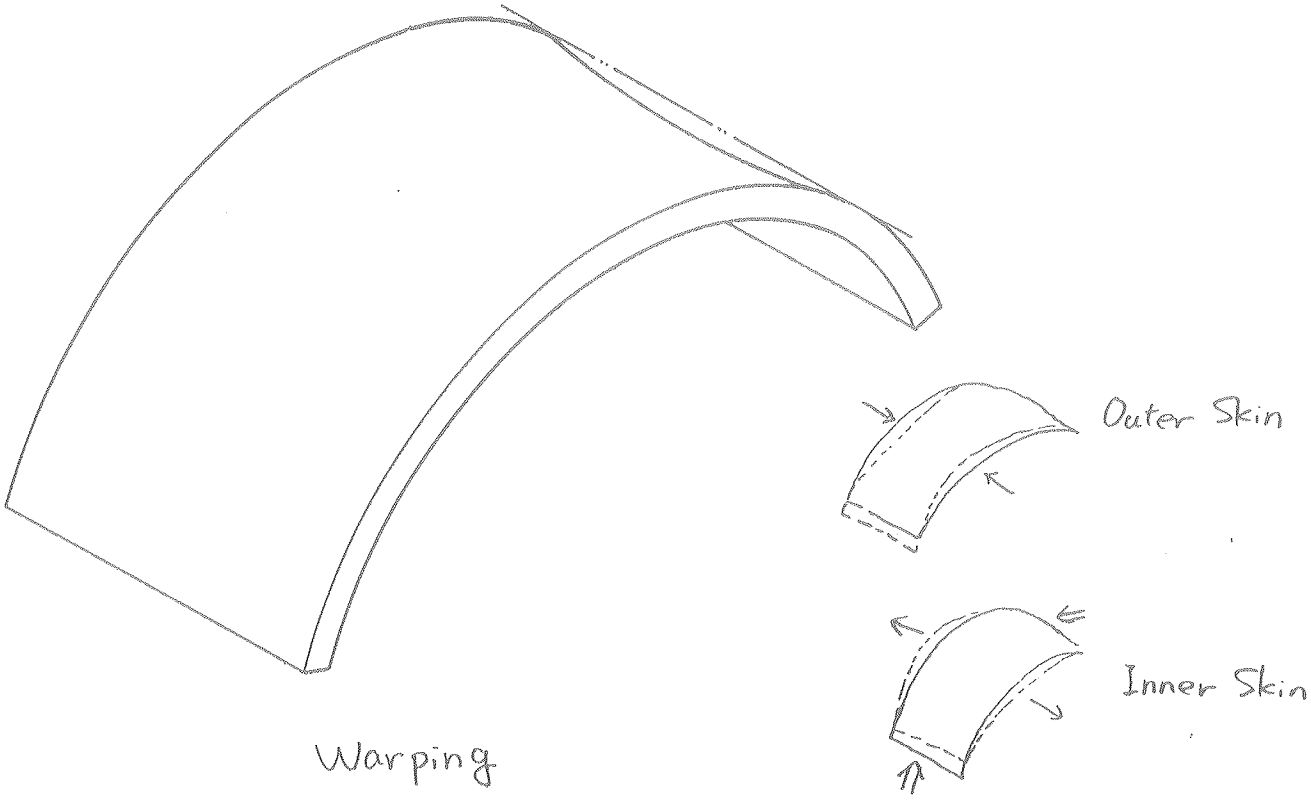
Outer Skin
Inner Skin
Warping

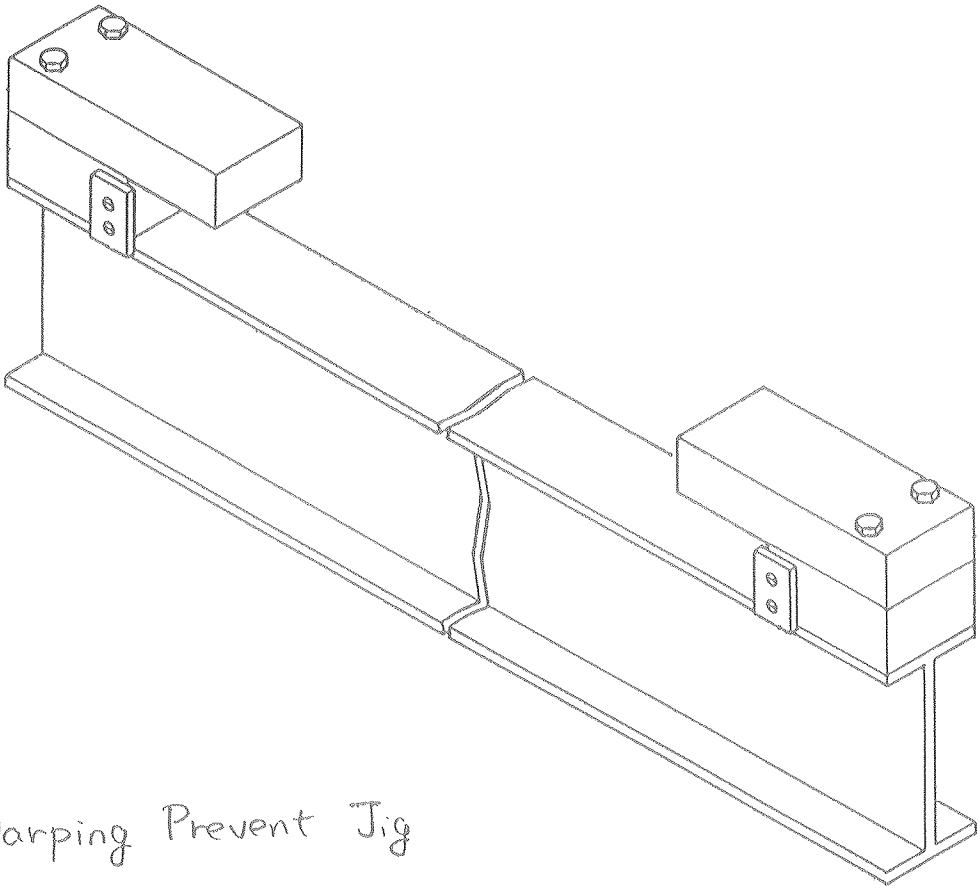

Warping Prevent Jig

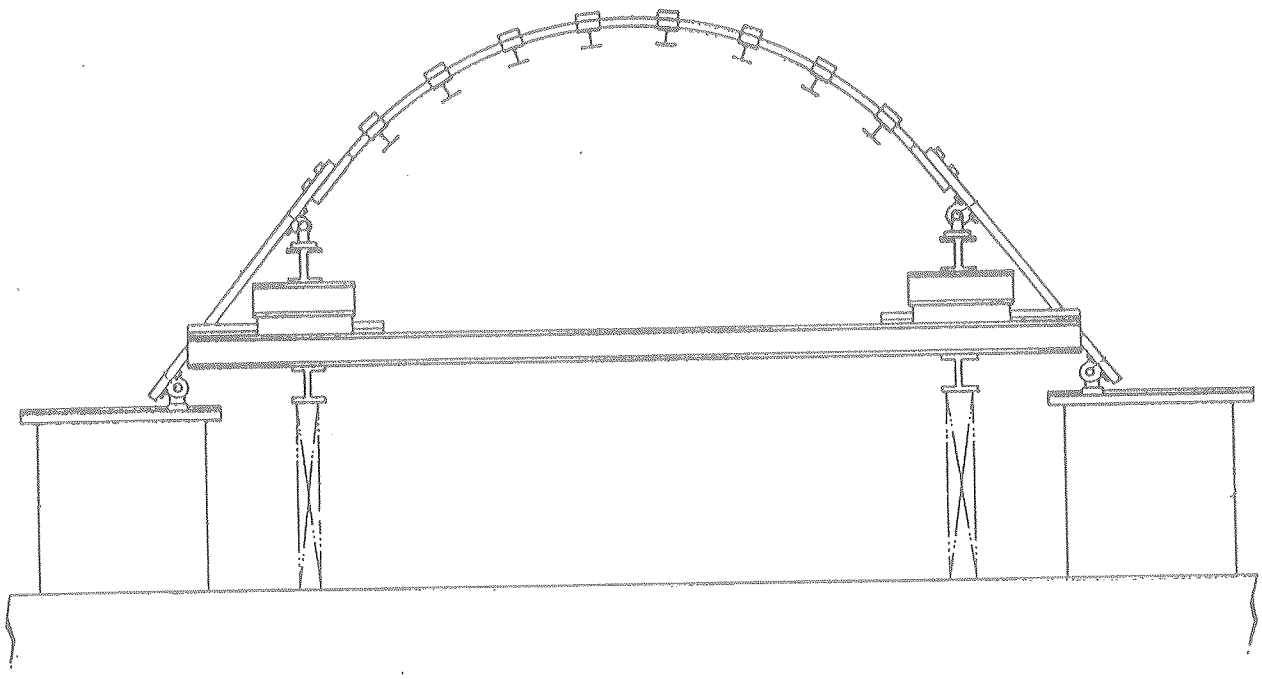

4 point Bending device

with Warping Prevent Jig

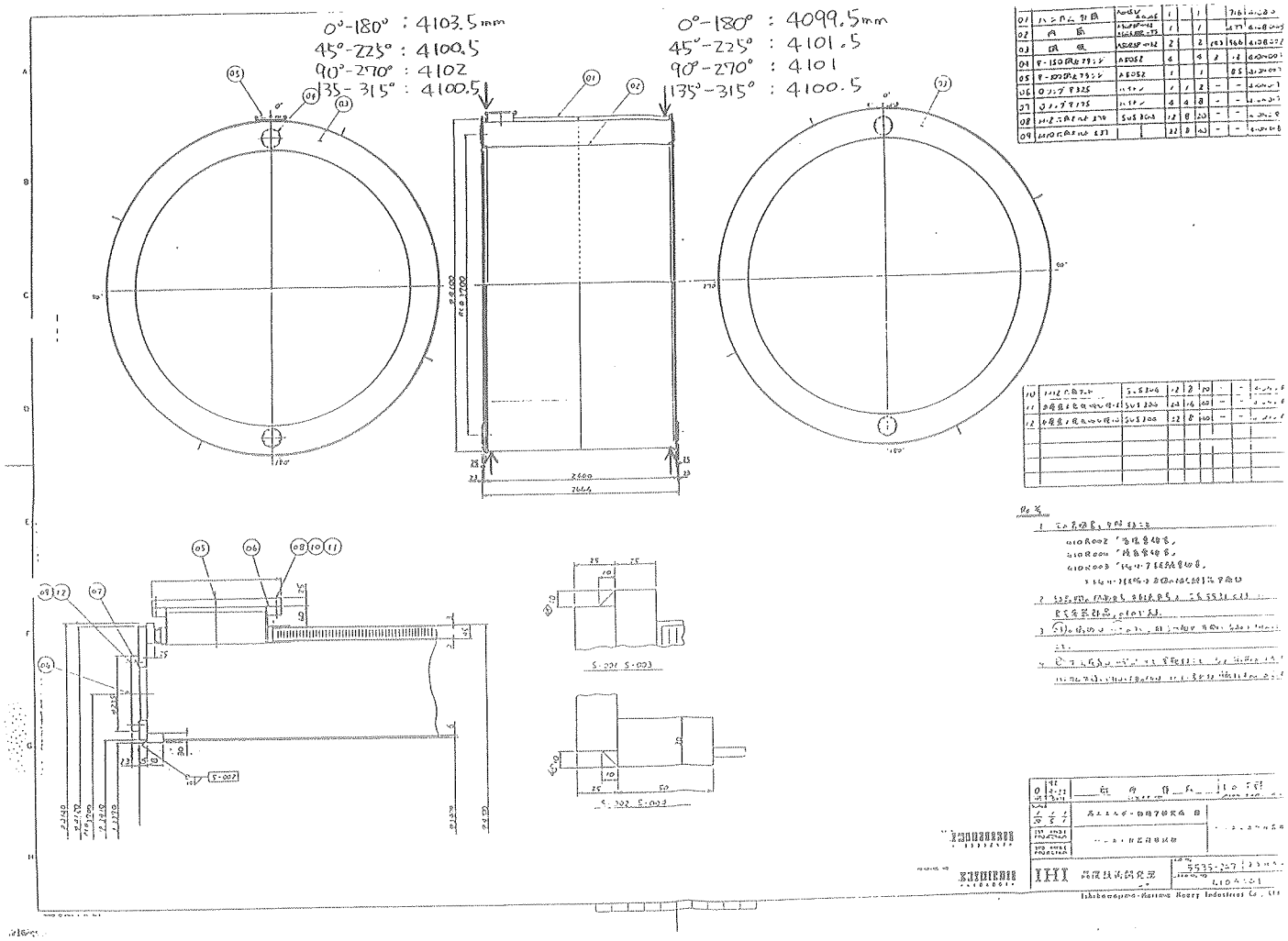
0°-180° : 4103.5mm
45°-225° : 4100.5
90°-270° : 4102
135°-315° : 4100.5
0°-180° : 4099.5mm
45°-225° : 4101.5
90°-270° : 4101
135°-315° : 4100.5
2660
2664
Ishikawajima-Harima Heavy Industries Co., Ltd.

Honeycomb Outer Vessel

Outer Diameter Measurement Results

unit : mm

		Chimney Side	Other Side
Nominal Value		4100	
Measured Values	0° – 180°	4103.5	4099.5
	45° – 225°	4100.5	4101.5
	90° – 270°	4102	4101
	135° – 315°	4100.5	4103

Purpose: Verity the propriety of estimating Cylindrical Stiffness of Honeycomb Vessel

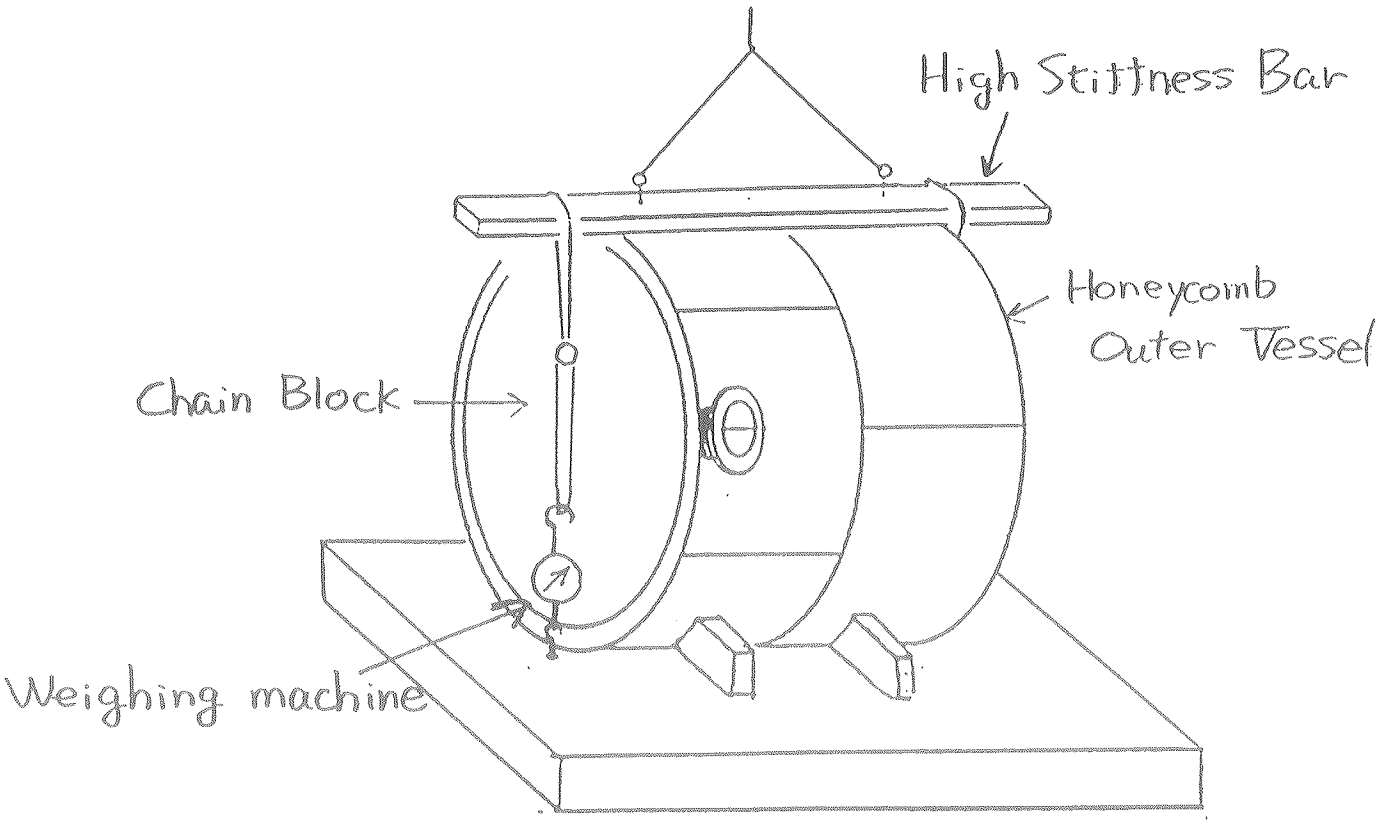

Stiffness Test Configuration

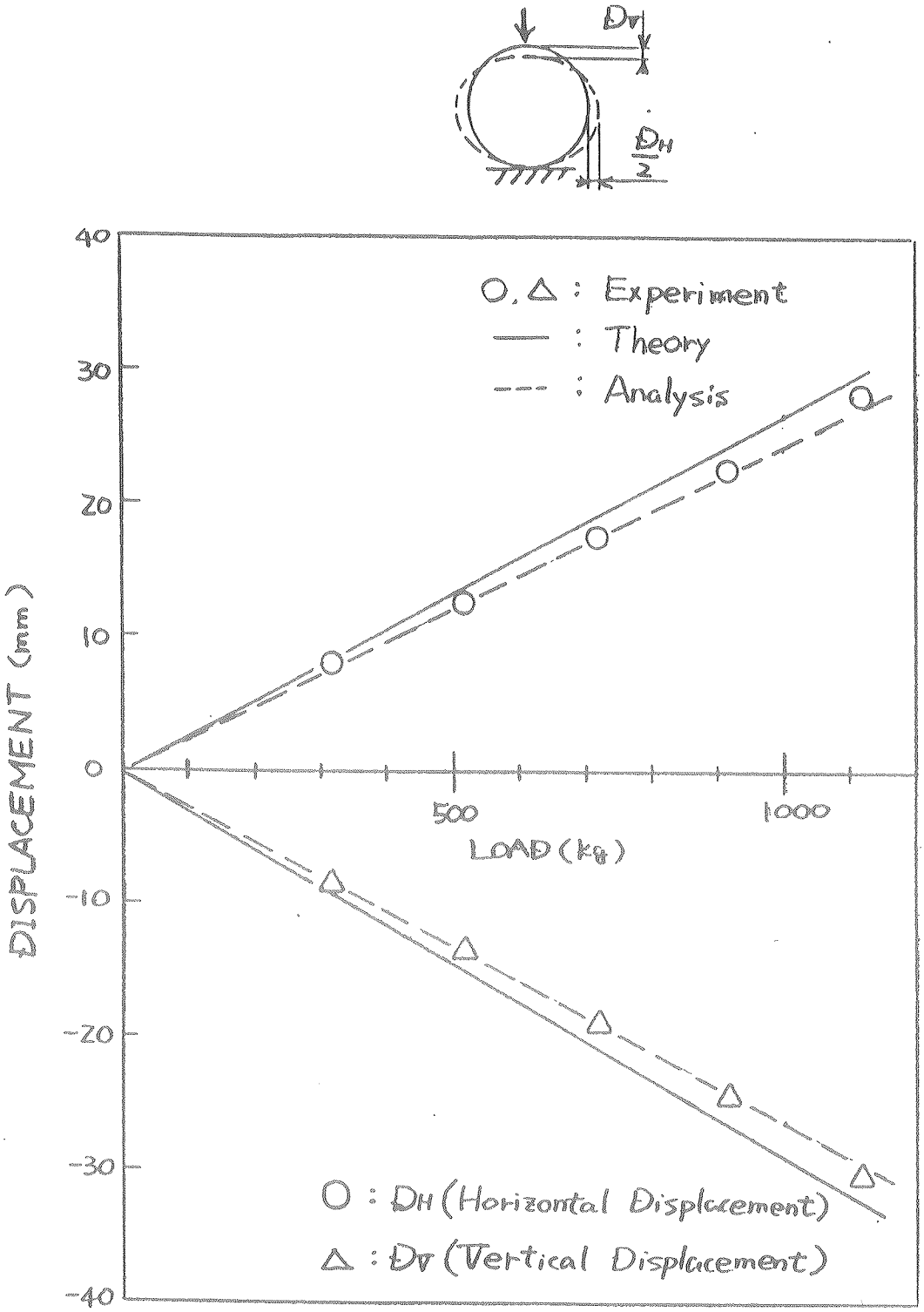

Honeycomb Outer Vessel

Stiffness Test Results

Test Results

- good agreement with Stress Analysis

Analysis details

- Finite Element Method
- Model (Special Technique)

Honeycomb Skin ⇒ Isotropic Solid Element

Core ⇒ Orthotropic Solid Element

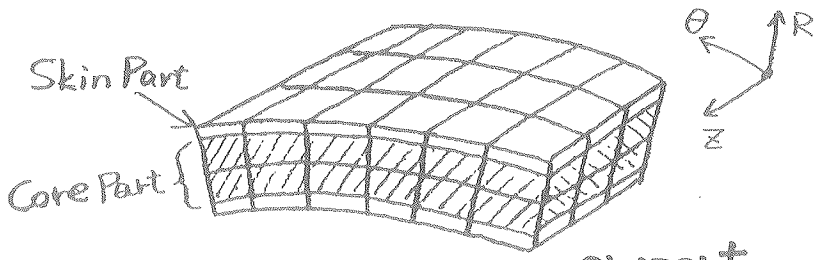

property

Skin : $E_R = E_\theta = E_z = 7000\ kg/mm^2$

Core : $E_R = 197\ kg/mm^2$

$E_\theta = E_z = 0$

$G_{R\theta} = 28.3\ kg/mm^2$

$G_{\theta z} = 0$

$G_{Rz} = 42.5\ kg/mm^2$

- almost agreement with Theory

Theory Detail (Formulas for Stress & Strain)
by R. J. Roark

$$D_H = \frac{WR^3}{EI}\left(\frac{2}{\pi} - \frac{1}{2}\right)$$

$$D_V = -\frac{WR^3}{EI}\left(\frac{\pi}{4} - \frac{2}{\pi}\right)$$

a little difference occured
because of <u>Effect of Core</u>

Purpose (Buckling Strength Test)

- Check the Buckling Strength against Operating Load Level, and Verity the propriety of designing Vacuum Vessel using Honeycomb Structure.

Applied Load

- External Pressure : 1atm
  (vacuum in the vessel)
- Axial Compression Load : 563 TON

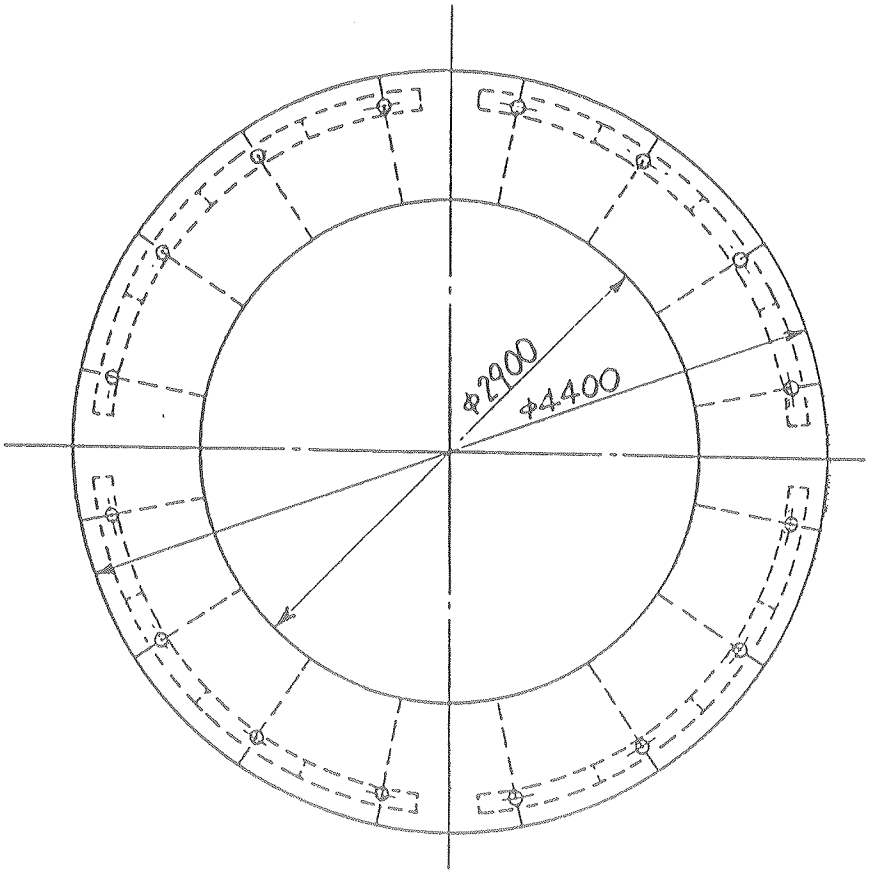

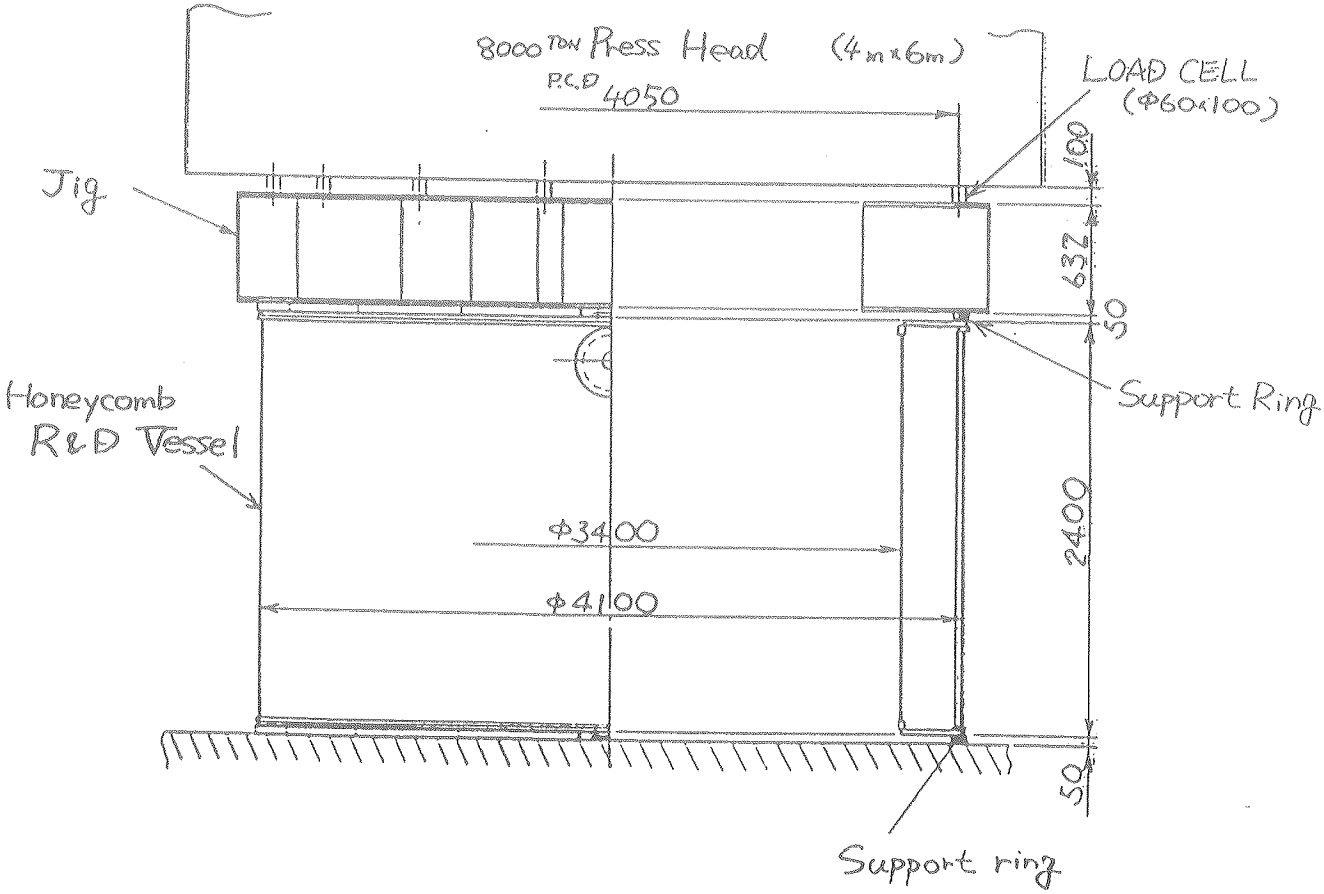

Buckling Strength Test Configuration

Buckling Criteria

under combined axial compression & external pressure

$$\frac{P}{P_{cr}} + \frac{F}{F_{cr}} < 1$$

where

P : External Pressure

P_{cr} : External Buckling Pressure

F : Axial Load

F_{cr} : Axial Buckling Load

for Main Vessel (L = 8726 mm)

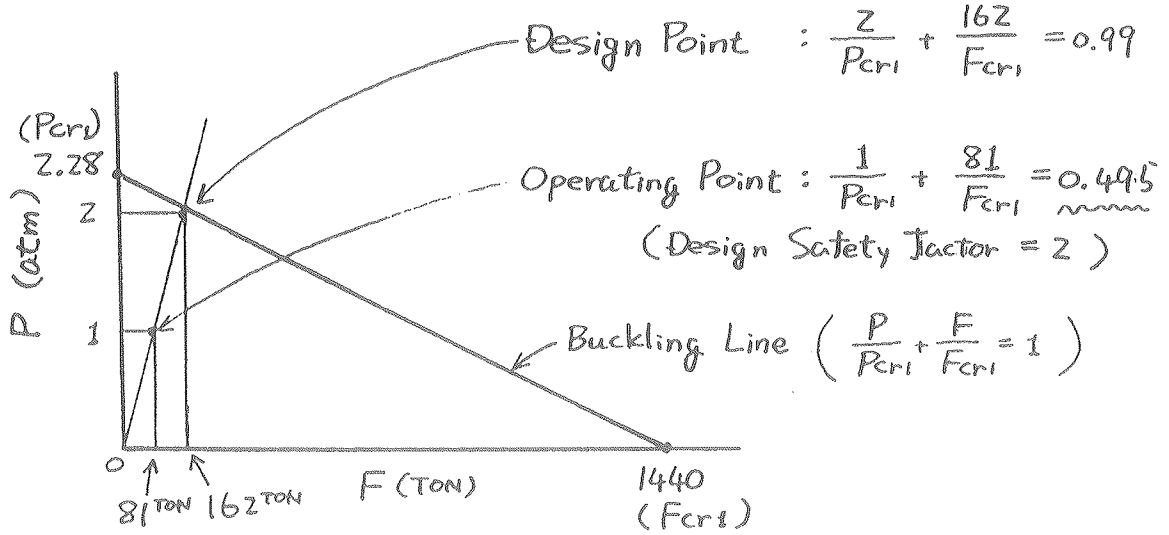

for R&D Vessel (L = 2300 mm)

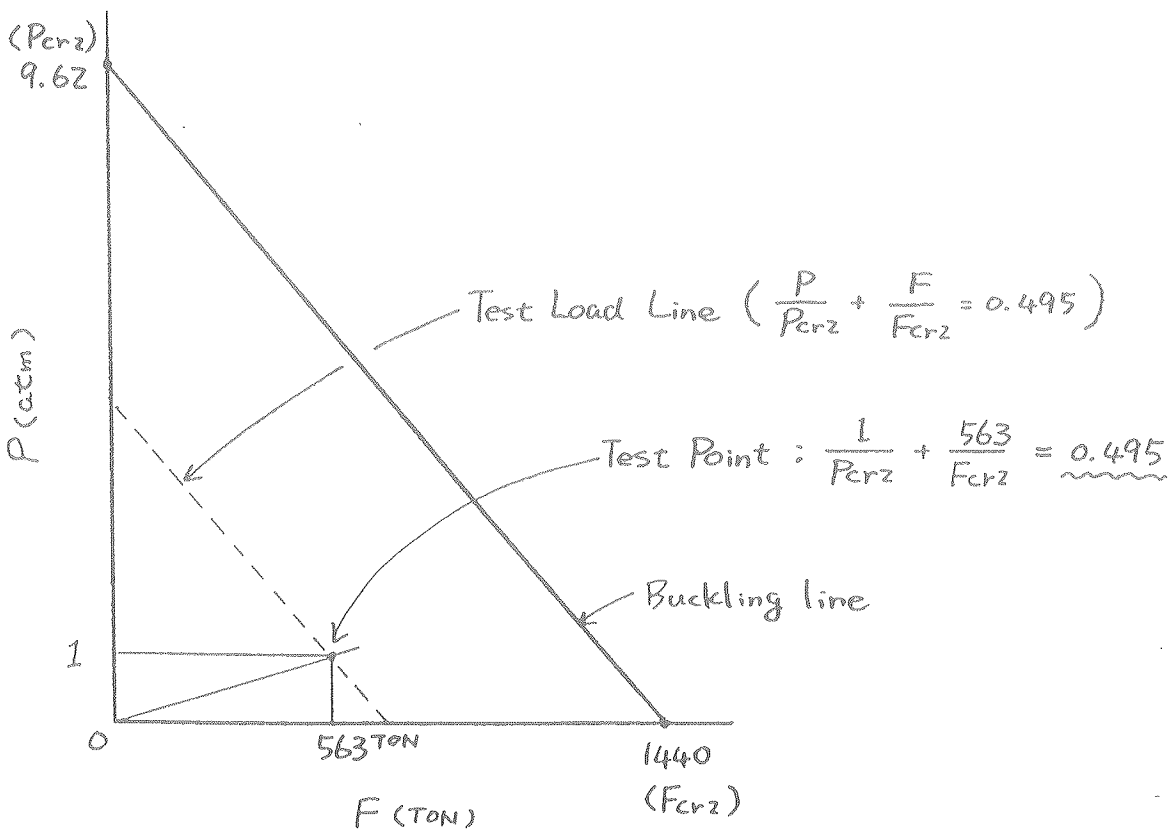

Buckling - Load Interaction curve
under combined axial compression & external pressure

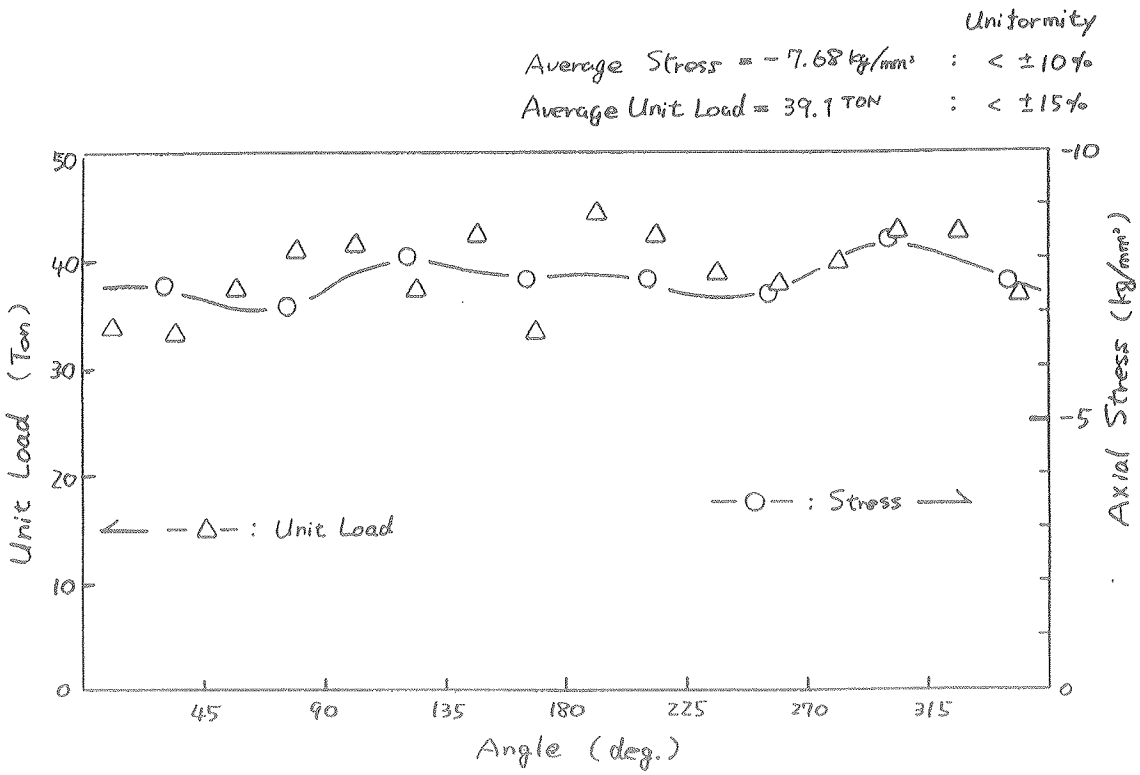

Distribution of Unit Load and Axial Stress in circumferential direction at Load of 626 TON

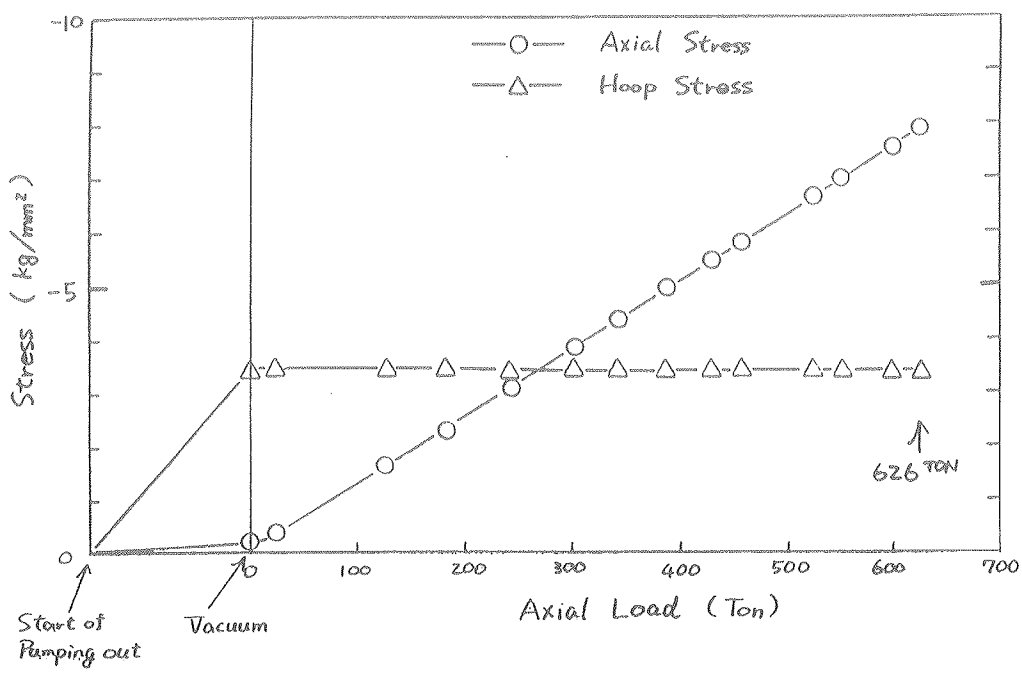

Stress of Honeycomb Outer Vessel

(Buckling Strength Test)

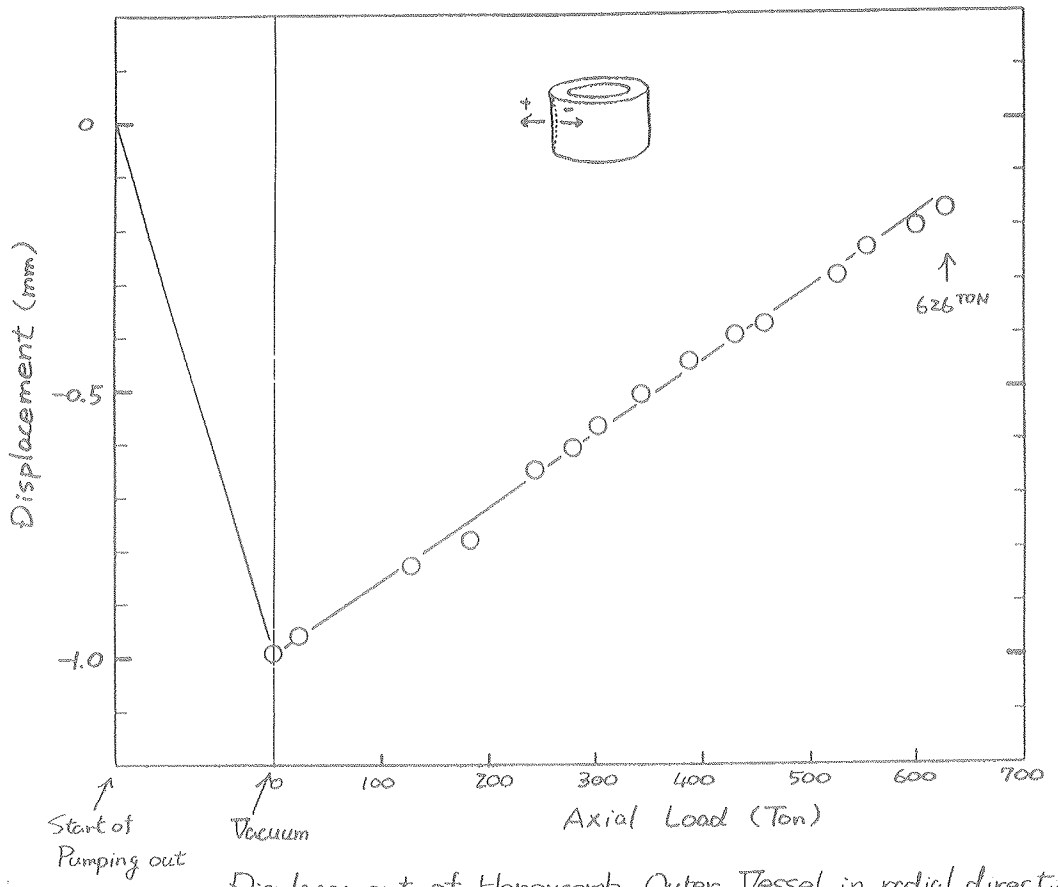

Displacement of Honeycomb Outer Vessel in radial direction

(Buckling Strength Test)

Results (Buckling Strength Test)

- No buckling phenomenon was observed througout this buckling Strength Test.

- We obtained the linear relation between applied load and Stress/Displacement.

Summary

We were able to

- develop bending method of honeycomb panel without Core collapsed or buckled.

- fabricate honeycomb vacuum cylinder with small disturbance in dimension.

- establish effective design method of honeycomb structure.

- and verify the reliability of brazed honeycomb structure as vacuum vessel against buckling load.