Fermilab

SDC SOLENOID DESIGN NOTE #181

TITLE: Viewgraphs of presentation at SDC Collaboration Meeting, Aug 4, 1992

AUTHOR: Bob Kephart

DATE: Aug 31, 1992

These are the viewgraphs Bob showed during his presentation at the Collaboration meeting on August 4, 1992.

R. Kephart , Aug 4, 1992
for SDC magnet
working group

STATUS OF PROTOTYPE SUPERCONDUCTING COIL

Introduction:

The work presented today is the result of the efforts of the SDC Magnet Working Group. (US - Japanese collaborative effort.) [other work in progress --- eg SPEC Cryosystem/refrigerator ⇒ Not discussed.

Magnet Working Group

Co-leaders: A. Yamamoto (KEK) / R. Kephart (FNAL)

Contributors:

Ron. Fast	FNAL
John Grimson	FNAL
Chuck Grozis	FNAL
Bob Kephart	FNAL
Ang Lee	FNAL
Rich Stanek	FNAL
Andy Stefanik	FNAL
Bob Wands	FNAL

Yosikuni Doi	KEK
Nobuhiro Kimura	KEK
Taka Kondou	KEK
Yasuhiro Makida	KEK
Ken-ichi Tanaka	KEK
Akira Yamamoto	KEK
Hiroshi Yamaoka	KEK

Charles Collins	SSCL
Jim Krebs	SSCL (FNAL)
Bob Richardson	SSCL
Matt Wilson	SSCL

Industrial Participants:

Paul Slysh Assoc.	USA
Toshiba	Japan
Sumitomo Light metal	Japan
IHI	Japan
Furakawa Electric	Japan
DIAL Machine Tool	USA
AMROL	USA

Goals of the SDC PROTOTYPE Solenoid Magnet

1. THE SDC SOLENOID DESIGN HAS BEEN OPTIMIZED TO PROVIDE:

   B = 2 Tesla
   VOLUME = 3.8 m dia x 8.8 m length
   $\lesssim 1.2\ \lambda_r$ (at $\eta = 0$)
   $0.25\ \lambda_i$

2. DESIGNED TO WITHSTAND LARGE EM FORCES (>1200 T compressive , > 40 T axial decentering) RESULT FROM THE FLUX RETURN GEOMETRY (STEEL HADRON CALORIMETER RADIATOR PLATES)

3. TO MINIMIZE MATERIAL IN THE SOLENOID , THE FOLLOWING <u>TECHNICAL IMPROVEMENTS</u> HAVE BEEN INCLUDED IN THE SOLENOID DESIGN:

SAVINGS

- HIGH E/M RATIO OF 7.5 KJ/KG

$.4\ \lambda_R$

- HIGH SPEED QUENCH PROPAGATION USING PURE AL-STRIP QUENCH PROPAGATORS TO SUPPRESS LOCAL TEMPERATURE RISE.
- HIGH STRENGTH ALUMINUM STABILIZER (Y.S.> 65 MPa, RRR = 500)

$.2\ \lambda_R$

- HONEYCOMB OR ISO-GRID OUTER VACUUM WALL FOR CRYOSTAT

To "Validate" These improvements + Test final Construction Techiques a 1/4 Length full diameter Prototype is being built. (Test all important Features) GOAL =

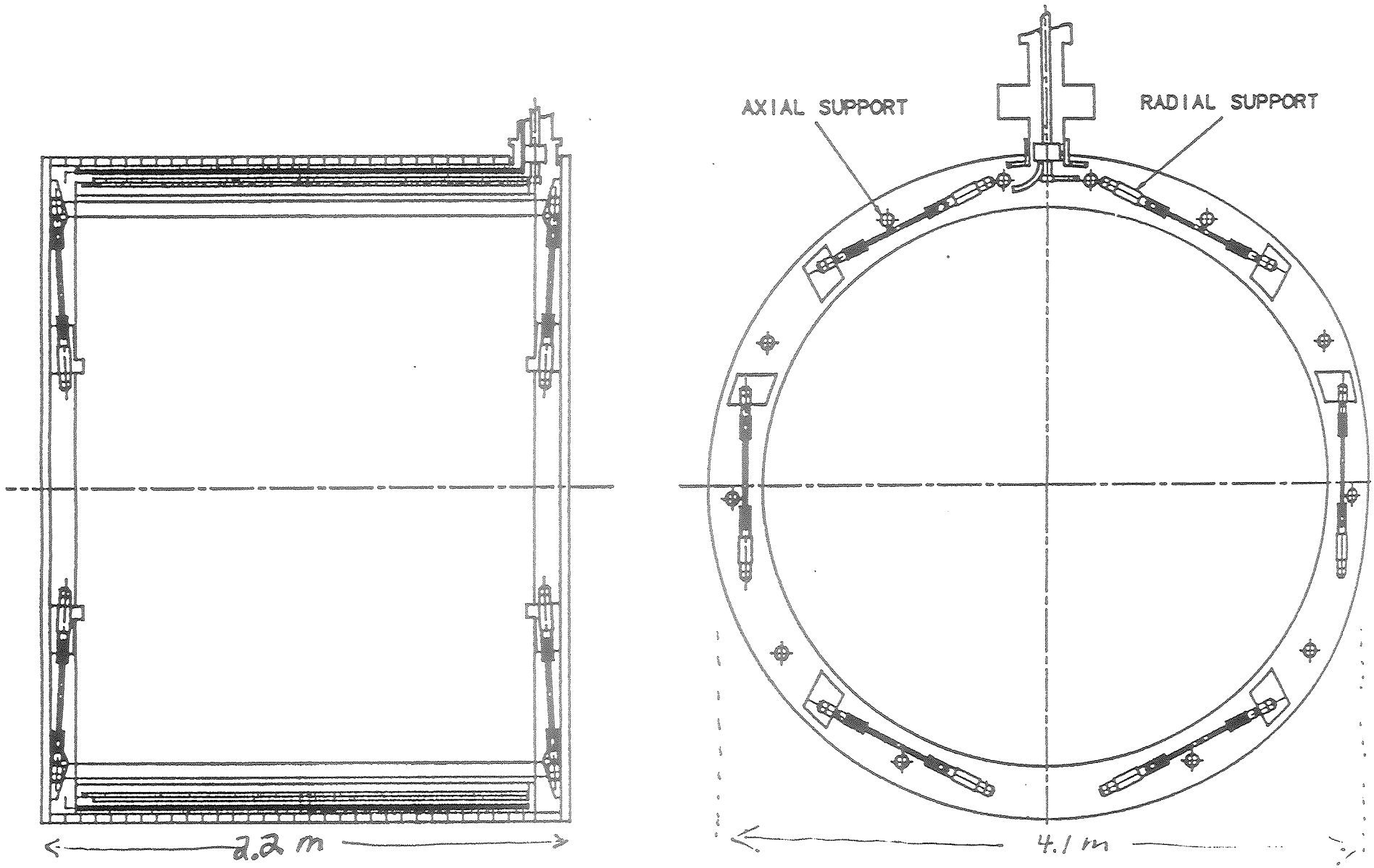

FIG. 5-16. SDC prototype solenoid. Dimensions are given in Table 5-16.

1.5 T, 11,200 Amps, 48 MJ

Prototype Superconducting Magnet

- started in 1991 and will be completed in 1993
- one quarter length with a full diameter
- joint work by KEK and FNAL

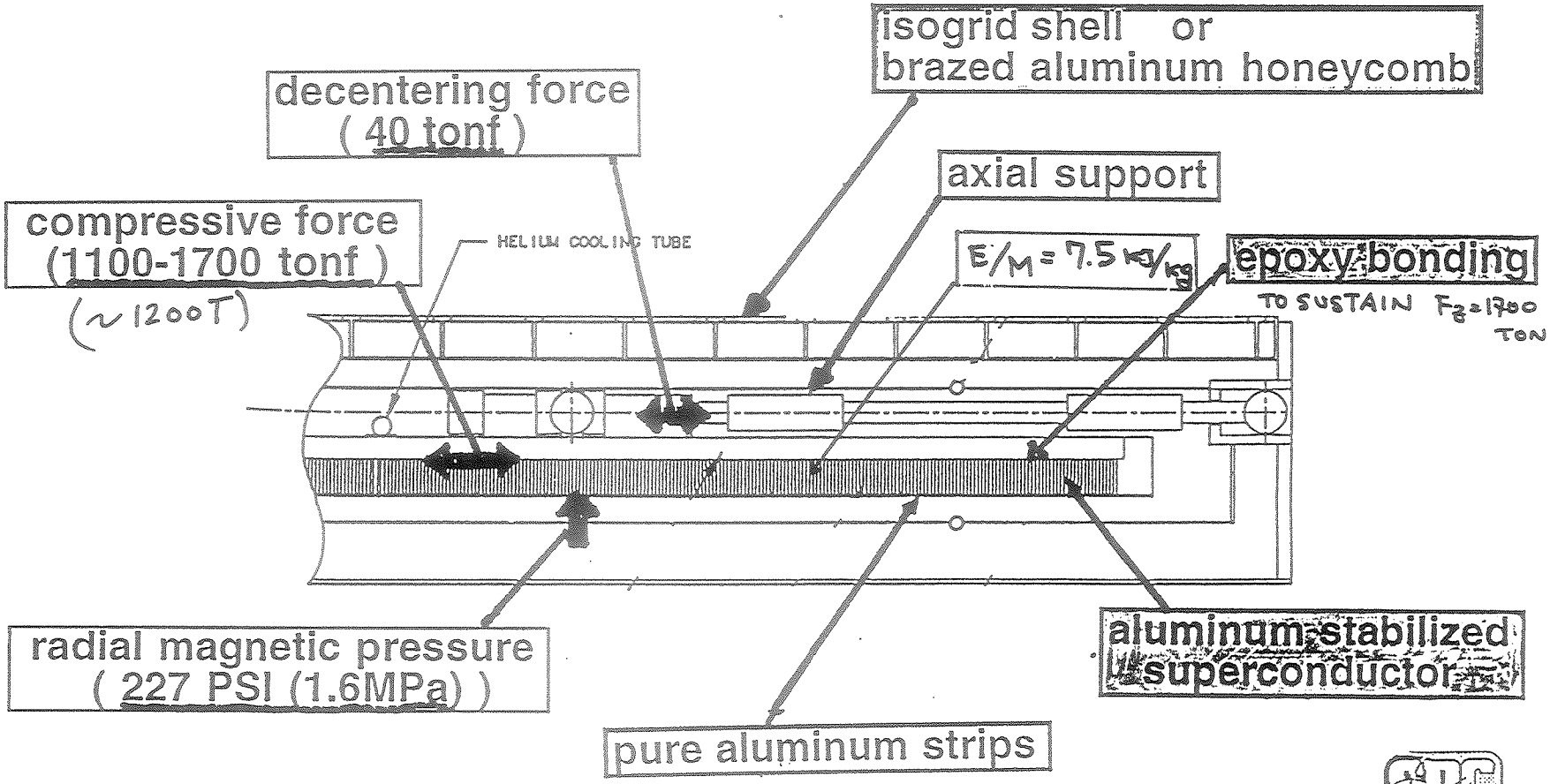

DEVELOPMENT OF

HIGH STRENGTH AL STABILIZED SUPERCONDUCTOR

WHY IS IT NECESSARY?

- Present superconductors used in CDF, TOPAZ etc. are mechanically too weak to sustain electromagnetic force at B = 2 T.

- Mechanical design under elastic boundary conditions is desired in the SDC thin solenoid. (loaded with combined stress in terms of hoop and axial components)($2\tau_{\cdot} = S_{\phi} - S_z$)

GOAL OF DEVELOPMENT

- Yield Strength (0.2%) at 4.2 K	> 60 MPa (min) > 70 MPa (desired)

HOW TO IMPROVE MECHANICAL STRENGTH?

- Specially Additional Impurity	Zn (200 ppm)
- Mechanical Cold Work	Drawing and/or Rolling (10 - 20 %)

Also SDC Requires a Large Aspect

Ratio Conductor. (10/1)

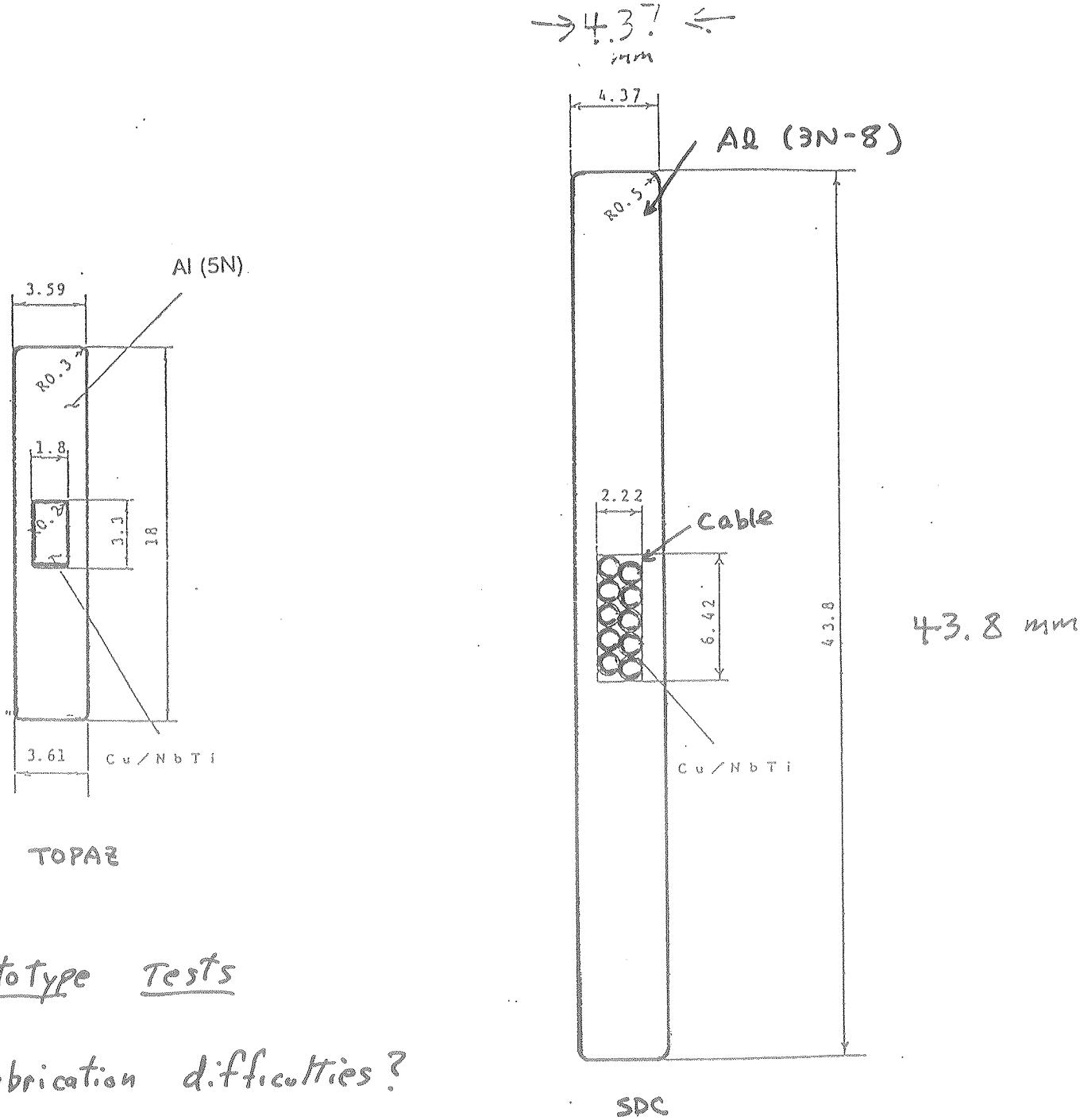

Prototype Tests

- Fabrication difficulties?
- WINDING Properties?

etc

CROSS SECTIONS OF (a)
TOPAZ AND (b) SDC SUPERCONDUCTOR

6 Km of Conductor has now been fabricated at Furakawa Electric in Japan

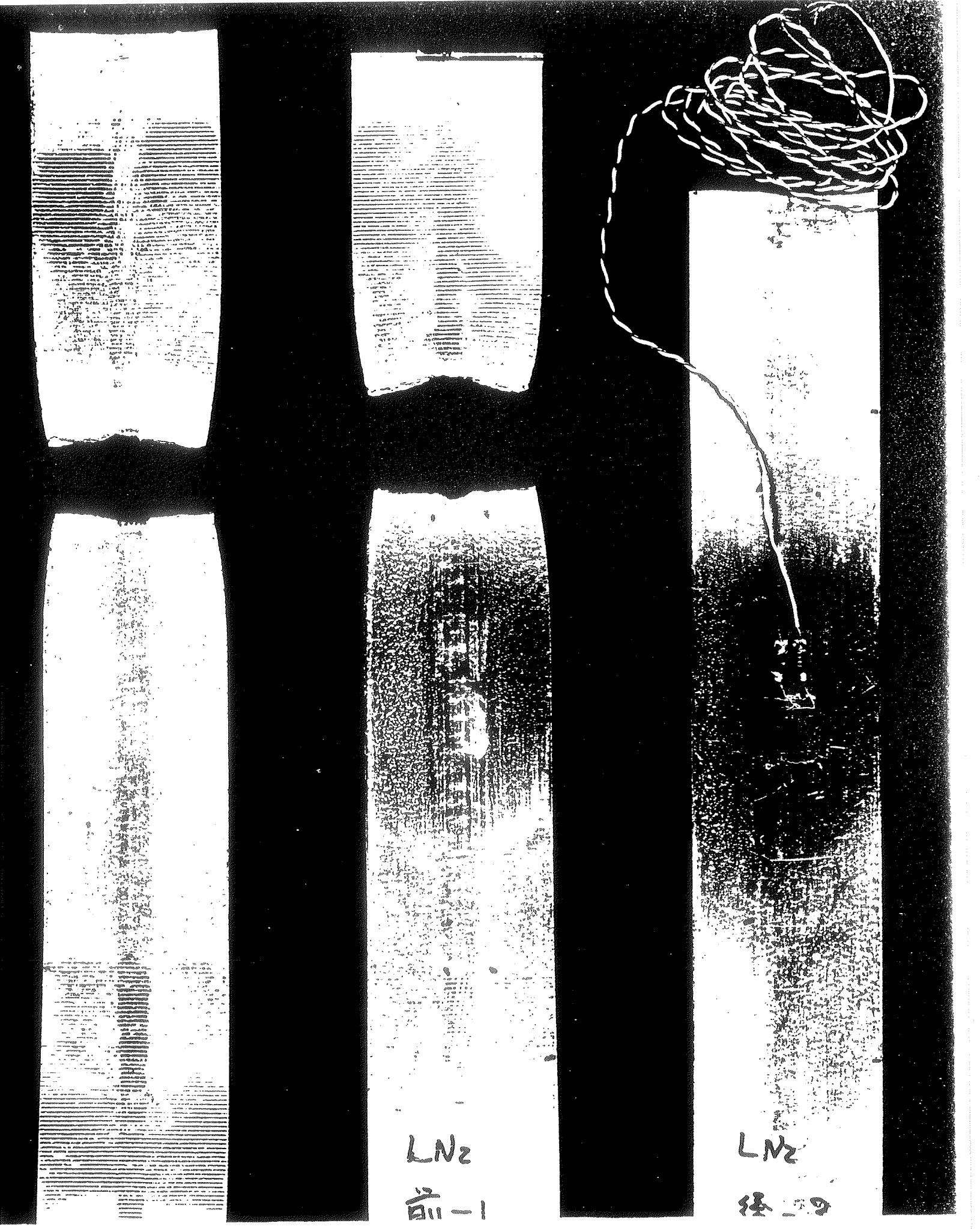
LN2
前-1
LN2
後-1

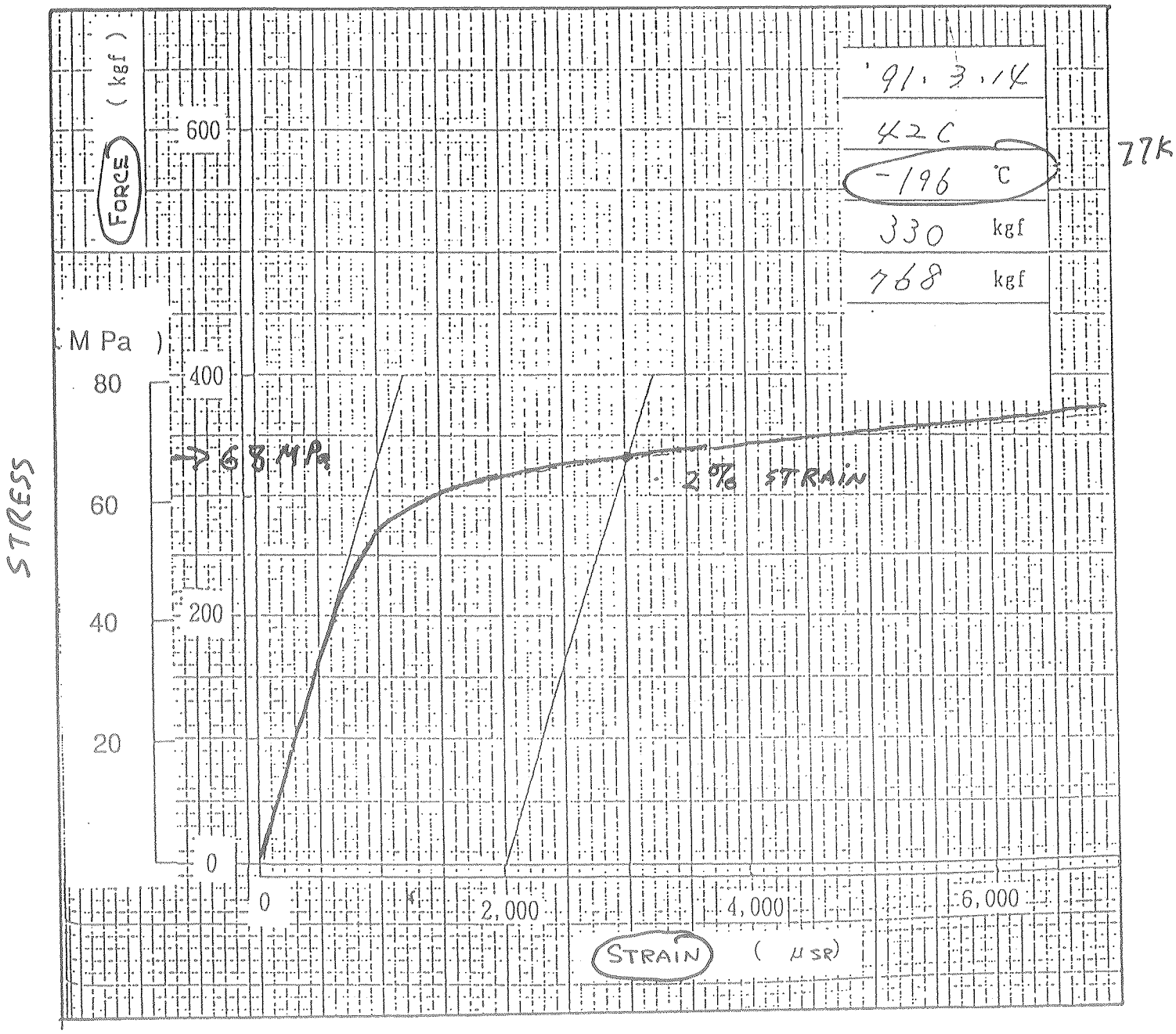

A STRESS- STRAIN CURVE OF HIGH STRENGTH PURE Al (4N)

COIL WINDING R&D

WHAT DO WE HOPE TO LEARN ?

- How to wind such a high strength conductor
(σ_{ys} = 68 MPa ===> high spring back effect)

- How do we apply internal pressure during winding. Can we maintain it afterwards ?

- Effects due to epoxy bonding/curing process

PLAN:

1) Gnd plane insulation completed before winding begins.

2) Preform conductor on a temporary madrel

3) Inner winding with hoop and axial compression on the inner surface of outer support cylinder (Gnd insulation)

4) cure with appropriate axial force applied

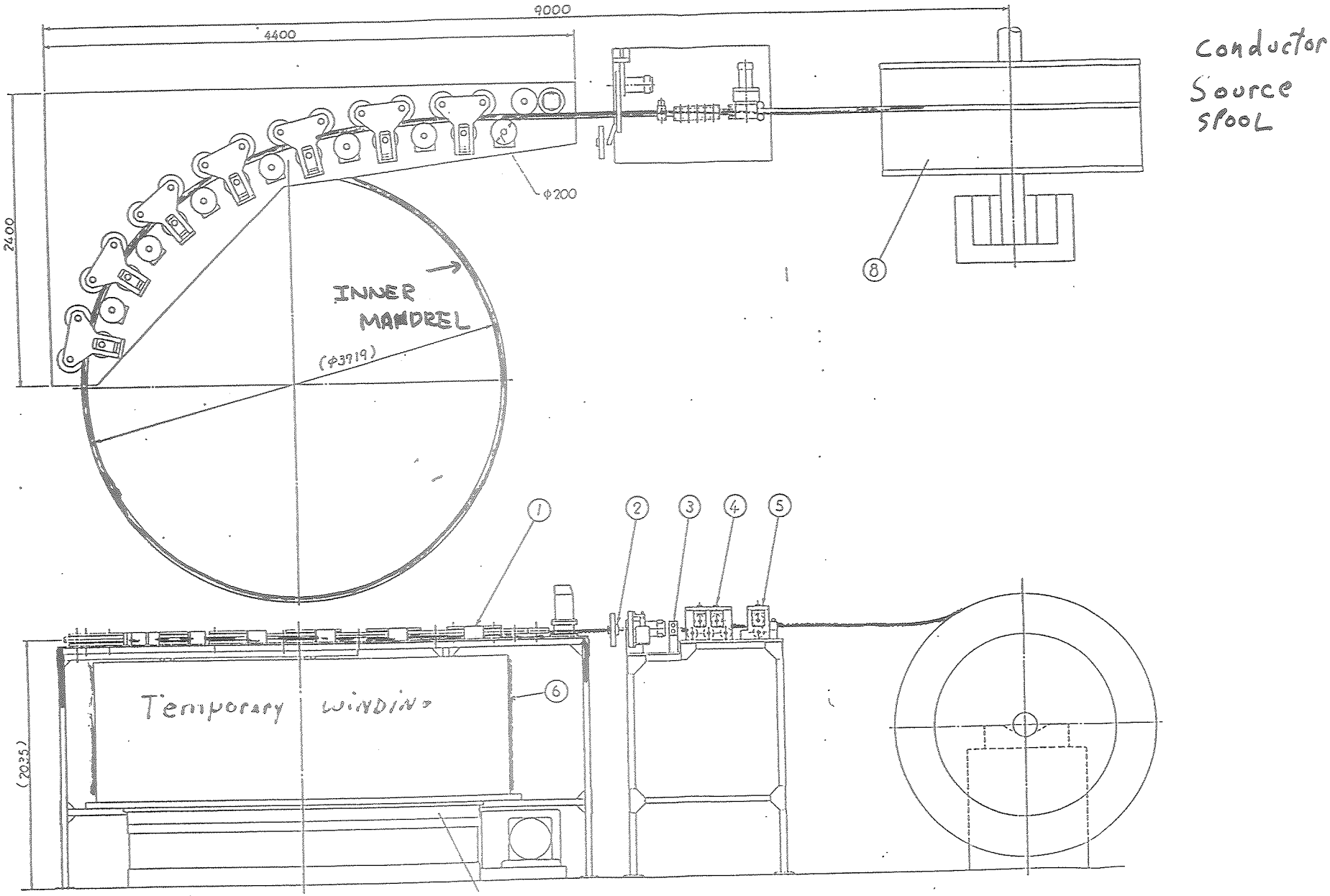

PREWINDING TO HAVE APPROPRIATE CURVATURE

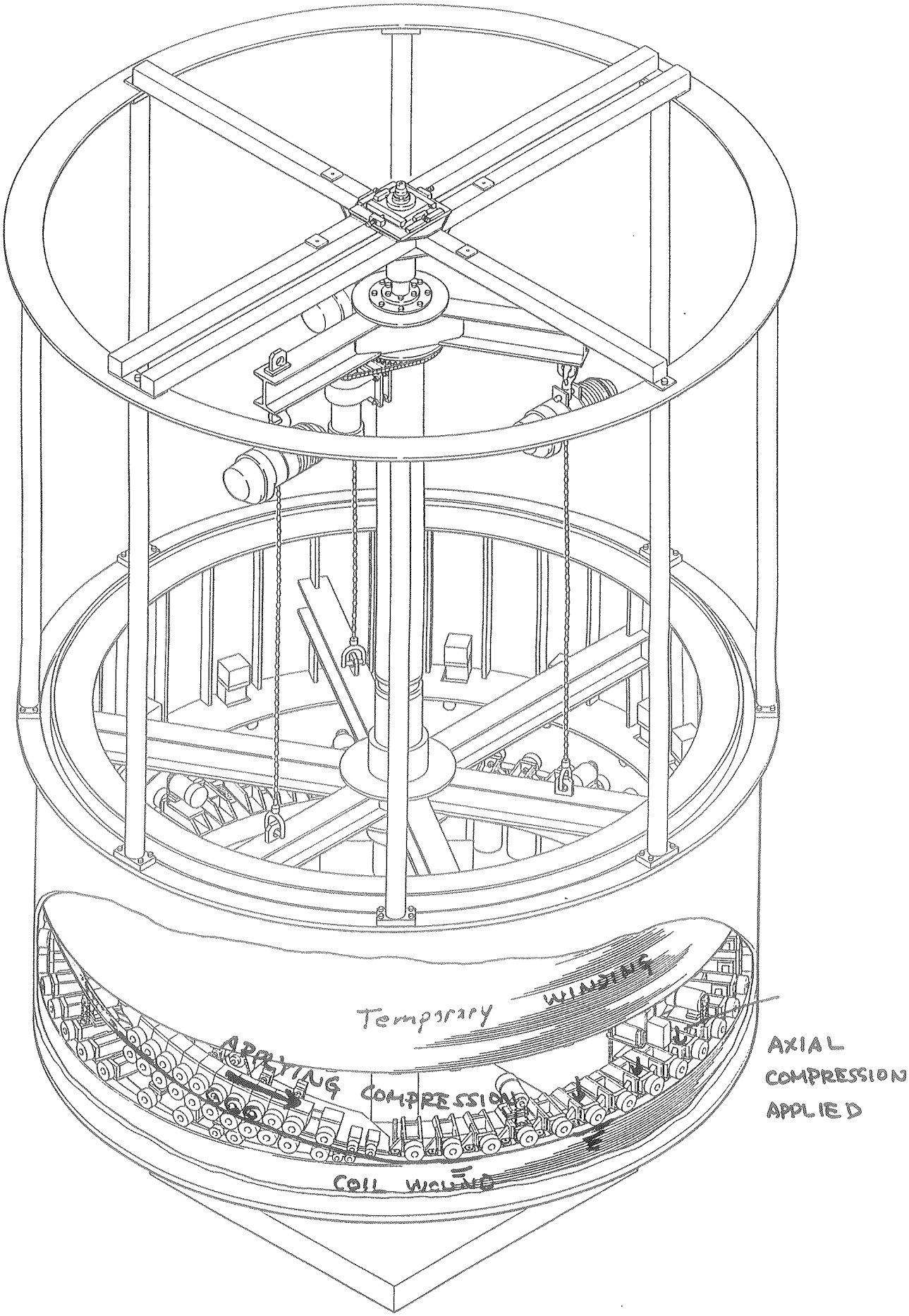
Temporary WINDING
APPLYING COMPRESSION
COIL WOUND
AXIAL
COMPRESSION
APPLIED

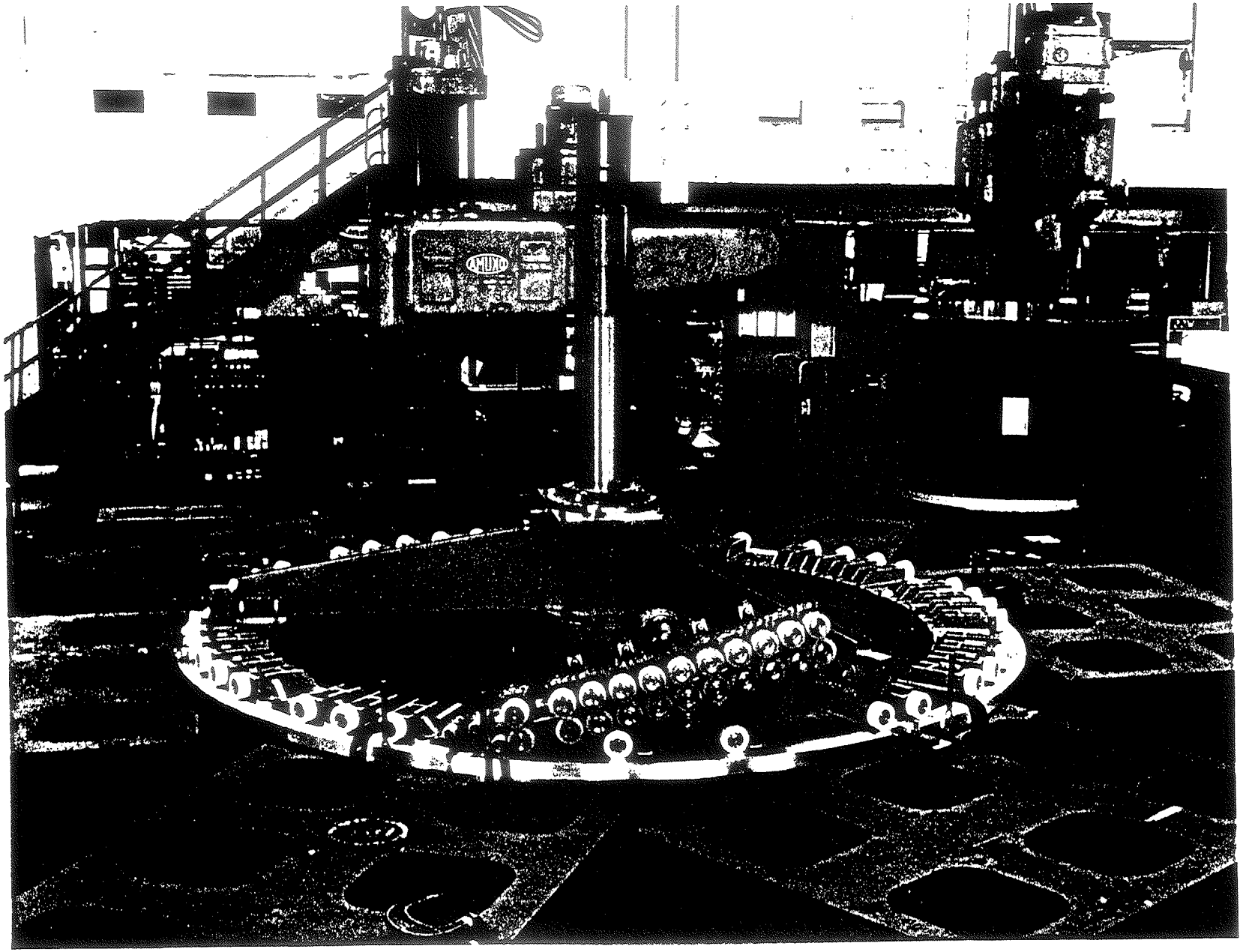
AMUNDI

30 cm TEST WINDING
(Dummy conductor)
(Toshiba)

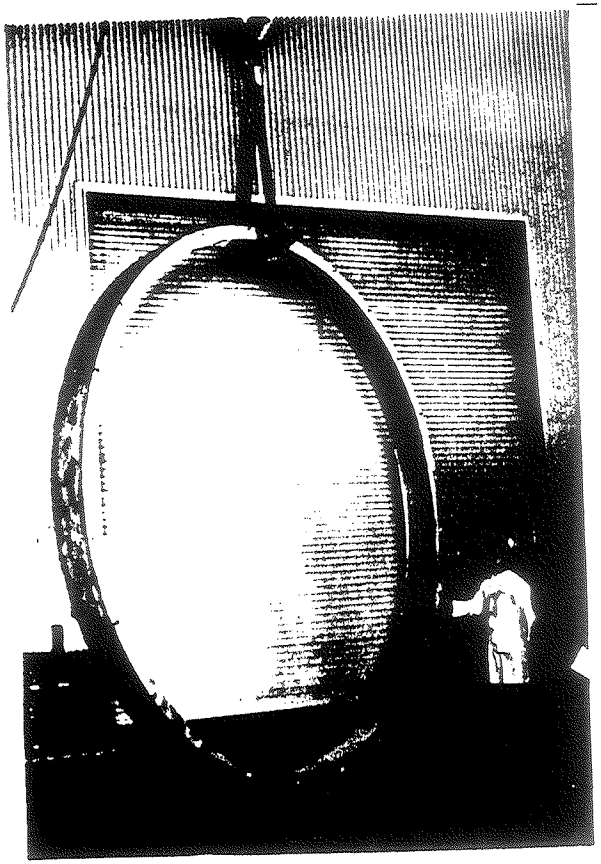

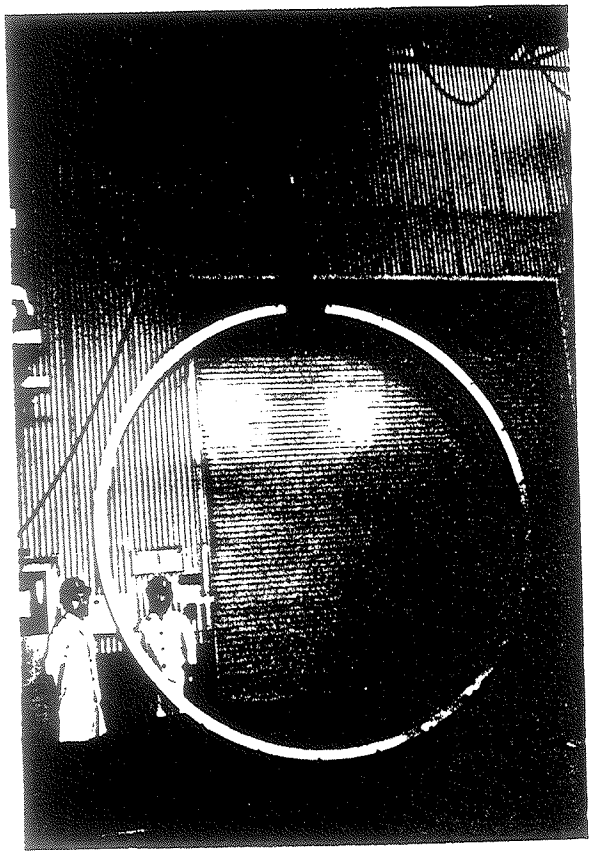

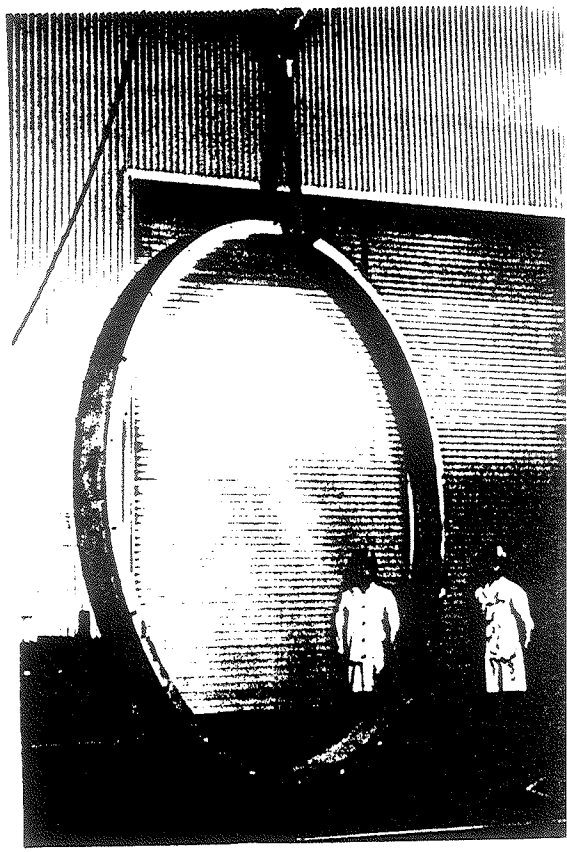

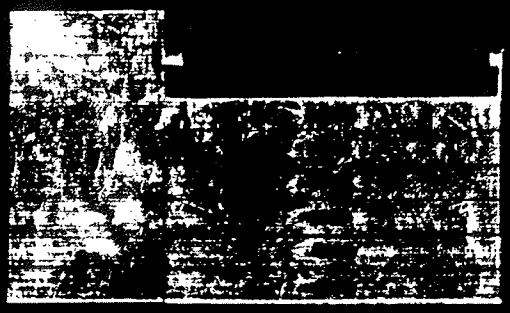

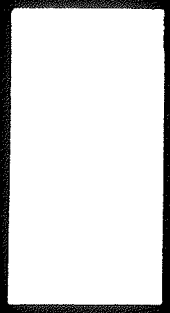

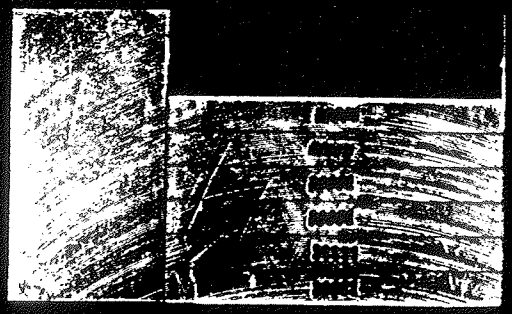

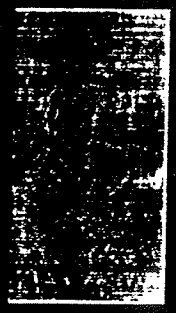

RESULTS OF EPOXY BONDING STRENGTH TEST

$\sigma_s > 5$ MPa (measured)

at sample from 1st Winding

(Calculated Shear Force

< 0.5 MPa)

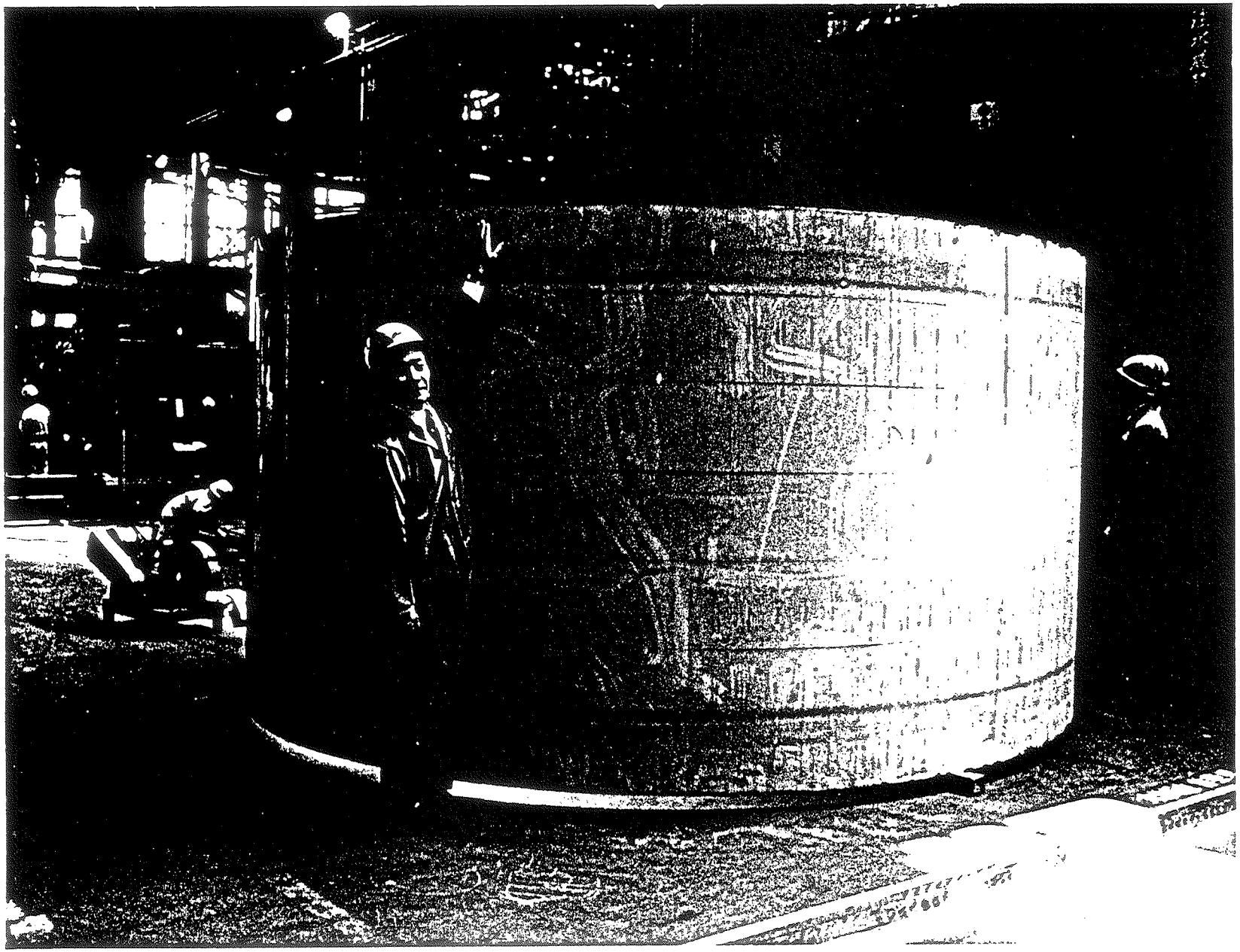

outer support cylinder for prototype coil

SDC Solenoid
Outer Vacuum Shell R&D

Purpose:

The SDC solenoid is required to be thin in terms of radiation lengths. If this shell were made with conventional techniques (eg Welded shell of solid aluminum) then it would be a major contributor to the overall thickness of the coil in terms of radiation lengths. (.3 λ_r) For this reason the SDC magnet group began a program to develop an improved technique to fabricate this shell.

Outer Vacuum Shell Specifications:

outer radius	2.05 m
total half length	4.363 m
⇒ High Reliability	metalic - welded
⇒ Safe - predictable	built to ASME/CGA codes

Plan:

The outer vacuum shell thickness for a solid shell is determined by elastic stability criterion for a cylindrical shell under external pressure.

SDC magnet group evaluated various fabrication techniques to achieve equivalent stiffness of the shell with minimal material.

We chose to pursue R&D on the two techniques that seemed most likely to lead to a practical shell that met the requirements metioned above:

1) Brazed Aluminum Honeycomb

2) Aluminum Isogrid

R&D is in progress at this time on both techniques.

Honeycomb Vacuum Shell

- Efficient use of material
- Brazed ⇒ weldable

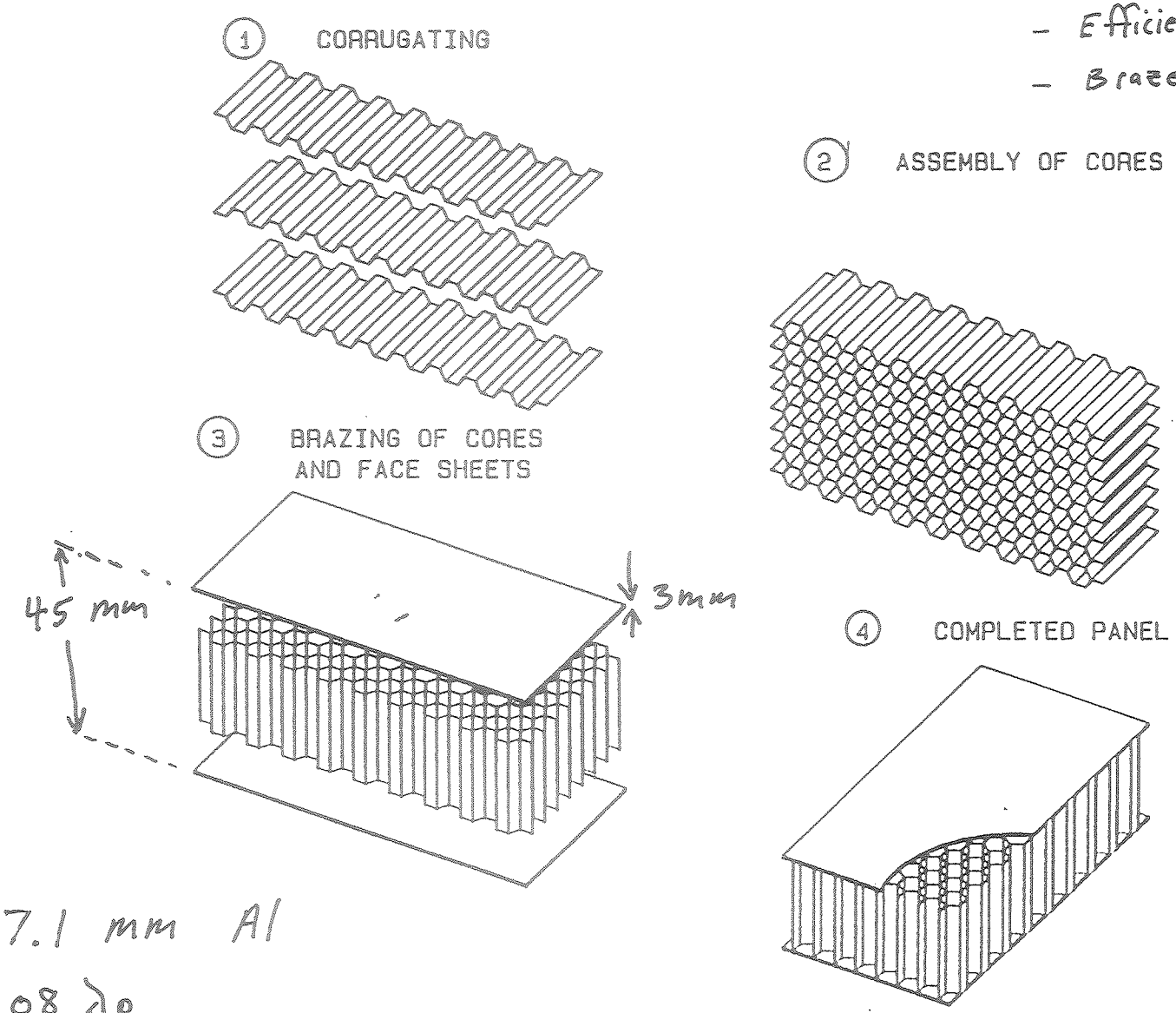

t_{eff} = 7.1 mm Al

= .08 λ_R

BRAZING PROCESSES OF HONEYCOMB PANELS

Bending HC PANELS

HONEYCOMB VACUUM STRUCTURE

RESEARCH AND DEVELOPMENT

(3RD EFFORT)

4 POINT PNAEL BENDING WITH CONSTRAINT FIXTURES

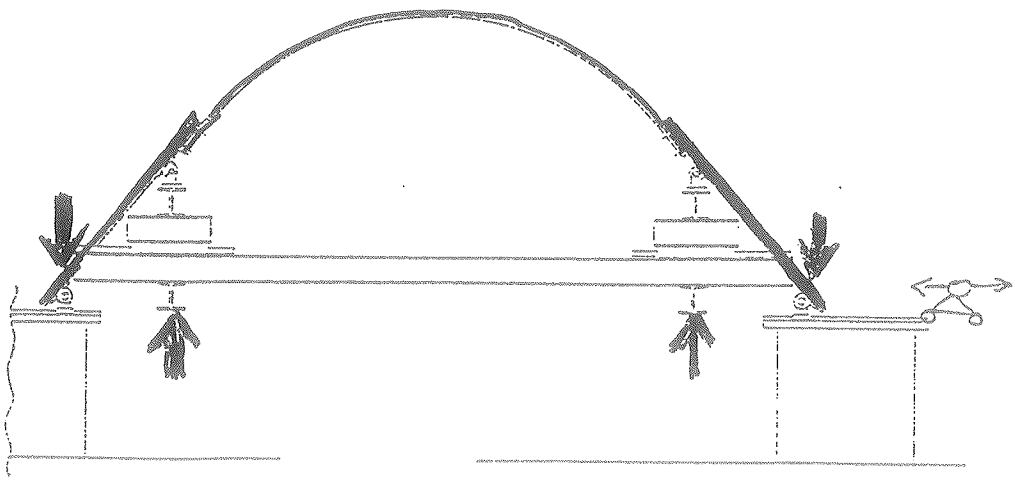

RESULTS (~25 mm Plates)

✓ 1. BENDING SUCESSFUL DOWN TO R/T RATIO OF 46 WITHOUT BUCKLING,

~ 2. RADIAL SPRING BACK OF 10 % OBSERVED AFTER RELEASING,

? 3. ~~HORSE BACK~~ (SADDLE) SAGITA OF 15 MM ,
(IT COULD BE ELIMINATED WITH ANOTHER CONSTRAINT FIXTURE).

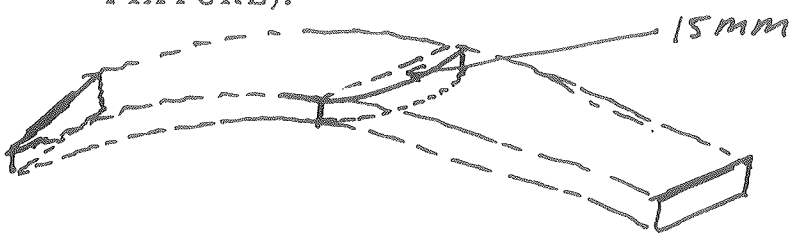

Option 2) ISO grid Shell

Characteristics of Aluminum ISO grid construction

- A lattice of intersecting ribs forming an array of equilateral triangles.
- Isotropic (no directions of instability or weakness)
- Efficient use of material for either compression and/or bending
  - Lightweight
  - Proven analysis techniques
  - Can be optimized for wide range of loading intensities
  - Readily reinforced for concentrated loads and cutouts
  - Regular pattern of nodes provides attach points for other structures
- Easily fabricated from solid Al plate with NC machine tools yielding a very reliable material of known costs.
- Large experience base in U.S. aerospace industry.

ISO grid Vacuum Shell Design Specifications

ISO grid Outer Vacuum Shell

Aluminum alloy	5083
Total thickness	46 mm
Skin thickness	4.0 mm
Skin layers	single
Node configuration	triangle
Effective thickness	11 mm (Al)
Weight reduction ratio	1/2.5
Radiation thickness	0.12 Xo

- WE HAVE Now fabricated Large Test Plates (50" x 90") of The required Thickness for SDC. (DIAL Machine, Rockford Ill.)
- Successfully brake-formed Them To required radius (AMROL, CALIF.)

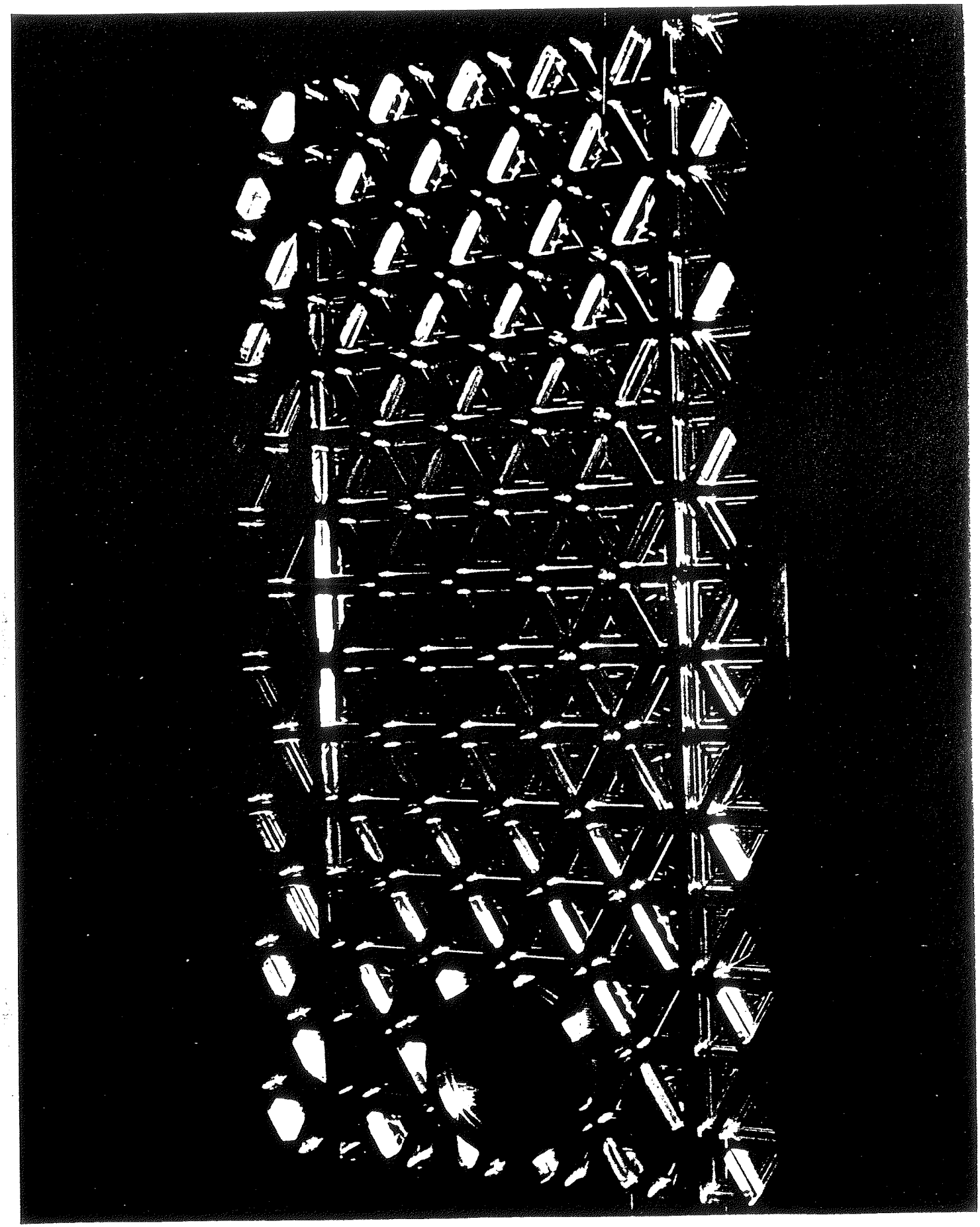

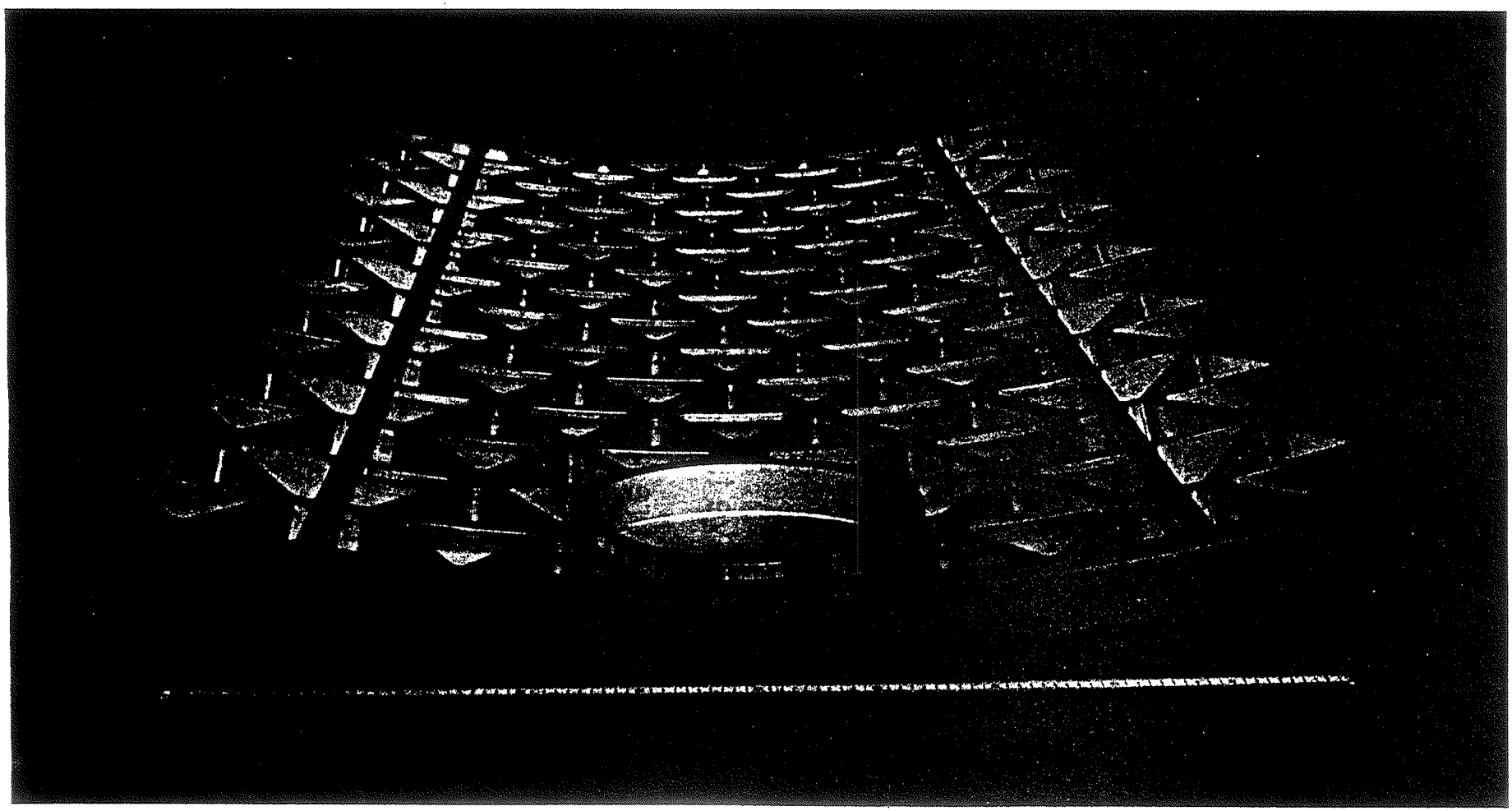

92-791

Status of Isogrid R+D

- Technique was quite successful on large Test plate. (very predictable)

- somewhat less efficient than Honeycomb might be. (11 mm vs 7 mm t_{eff})

- SDC Magnet Group decided to fabricate the outer VACuum shell for prototype using Iso-Grid.
  [Al plate on order, contracts for machining and bending are in process]

- WELD JOINT TESTS have been done with 5083-H321 (Look fine)

- Decision for Final shell will depend on outcome of Honeycomb R+D.

Expected Performance of SDC Vacuum Shell
(Effective Thickness vs pseudo-rapidity)

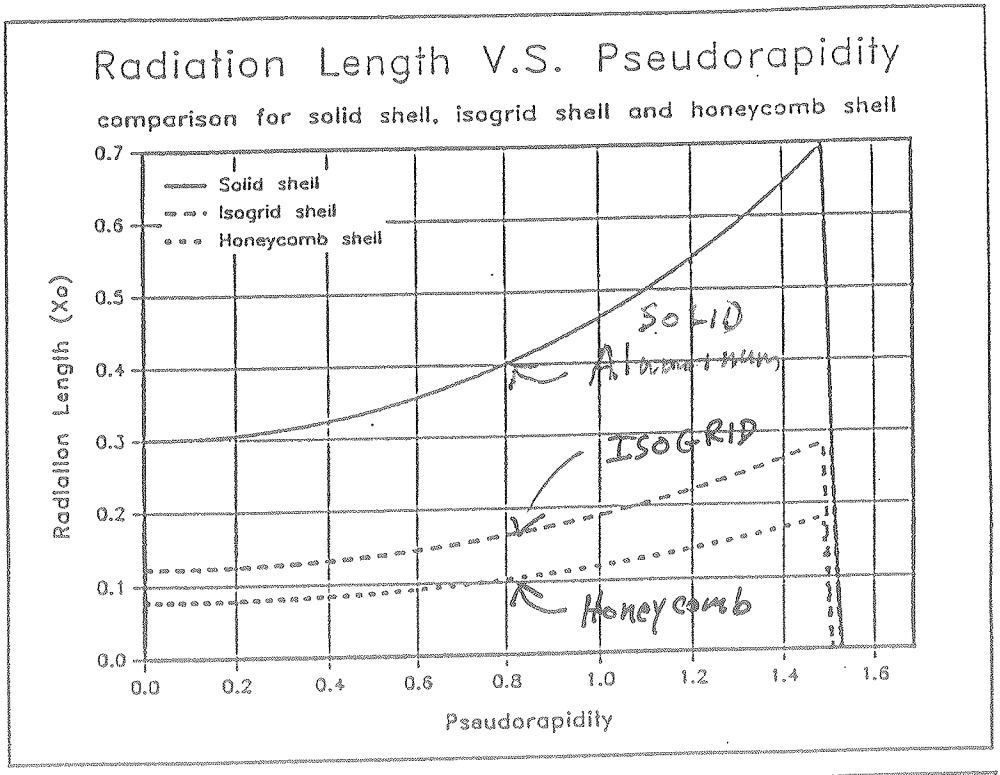

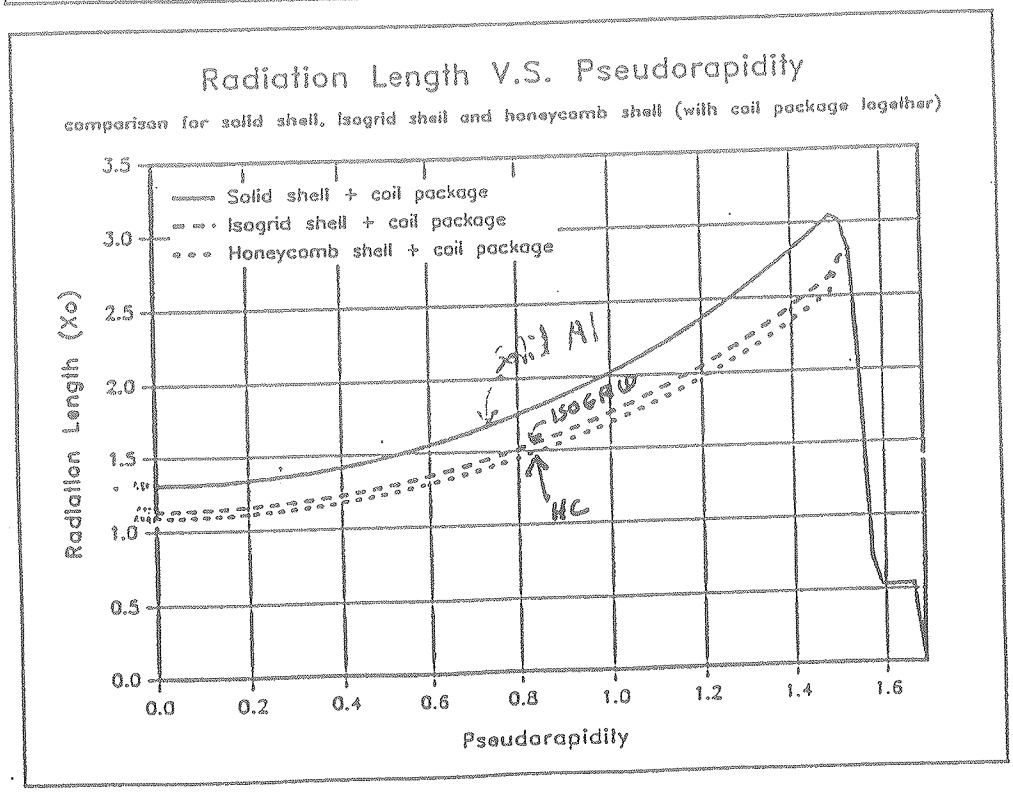

Summary

PROGRESS ON PROTOTYPE R&D

- SUPERCONDUCTOR OF 6km HAS BEEN NEARY COMPLETED. IT SHOULD SATISFY Requirement $\sigma_{0.2}$=67MPa AT 4.2K

- COIL WINDING MACHINE IS BEING DEVELOPED. THE PROTOTYPE COIL IS TO BE WOUND BY THE END OF THIS YEAR. (STARTS IN SEPT)

- EPOXY BONDING SHEAR-STRENGTH MEASURED USING SAMPLES TAKEN FROM THE FIRST WINDING TEST WAS > 5MPa AND LARGER BY A FACTOR 10 THAN EXPECTED FROM FEM ANALYSIS.

- VACUUM VESSEL WITH ISOGRID IS IN PROGRESS. BRAZED HONEYCOMB CYLINDER IS BEING DEVELOPED IN PARALLEL.

- PROTOTYPE MAGNET ASSEMBLY IS TO BE CARRIED OUT IN 1993.

Table 5-17

Overall schedule for the prototype solenoid and the production solenoid. The Japanese fiscal year begins April 1 of the year indicated.

JFY1991	Prototype Magnet Development
	—Superconductor fabrication (by May) '92
	—Winding machine development (by July)
	—Outer support cylinder fabrication
	—Isogrid vacuum wall development
JFY1992	—Coil winding (Sept ~ Dec)
	—Cryostat element fabrication
JFY1993	—Assembly of the magnet
	—Cool-down and excitation in air
JFY1994	Production Magnet Fabrication
	—Superconductor fabrication
	—Cryostat element fabrication
JFY1995	—Coil winding
	—Magnet assembly
JFY1996	—Magnet assembly continued
	—Cool-down and excitation test in air
	—Transportation to SSCL
JFY1997	—Cool-down and excitation in iron
	—Field mapping