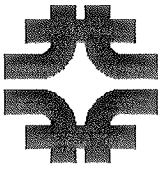

Fermilab

SDC SOLENOID DESIGN NOTE #176

TITLE: Viewgraphs of review of CSAR (draft) by SSCL Physics Research Division

AUTHOR: Andy Stefanik

DATE: Apr 23, 1992

These are the viewgraphs Andy showed during his presentation at the review of the draft CSAR by the SSCL Physics Research Division on April 23, 1992.

Superconducting Super Collider Laboratory
Physics Research Division
2550 Beckleymeade Avenue, Mail Stop 2000
Dallas TX 75237-3946
(214) 708–6215
Fax: (214) 708-6174

Memorandum

To: Distribution
From: R F Lavelle
Date: 15 April 1992
Subject: Physics Research Division Review of the SDC CSAR

Gentlemen,

First of all, I'd like to express the thanks of myself, John Elias and Tom Murphy for all the hard work that you have done over the last year in the preparation of the SDC CSAR document. Initial feedback on the document is very positive

Secondly, on the 23rd and 24th of April there will be a Physics Research Division independent review of the SDC CSAR that we have produced over the last year.

As indicated in your discussions with John Elias, each of the technical authors will be presenting a 1/2 hour presentation on the sections that they authored. The general approach for each presentation should be as shown below . . .

1st third	Technical Description of Subsystem
2nd third	Discussion of the inherent hazards and mitigations
final third.....	Question and answer period

Attached is the agenda for the 23rd . . . the 24th is reserved for the review panel and your participation is not required.

Looking forward to seeing you on the 23rd.

Please feel free to contact the me at 214-708-6215, SSCVX1::Lavelle, or FNAL::Lavelle with any comments or questions. Thank you.

Robert F. Lavelle
SDC ES&H Project Management

For CSAR Presentation - 4/23/92 by R.S.

SDC SOLENOID SYSTEM

MAJOR COMPONENTS

1. SUPERCONDUCTING SOLENOID
2. CHIMNEY
3. SERVICE PORT
4. CONTROL DEWAR

SDC SOLENOID SYSTEM

LOCATION OF COMPONENTS

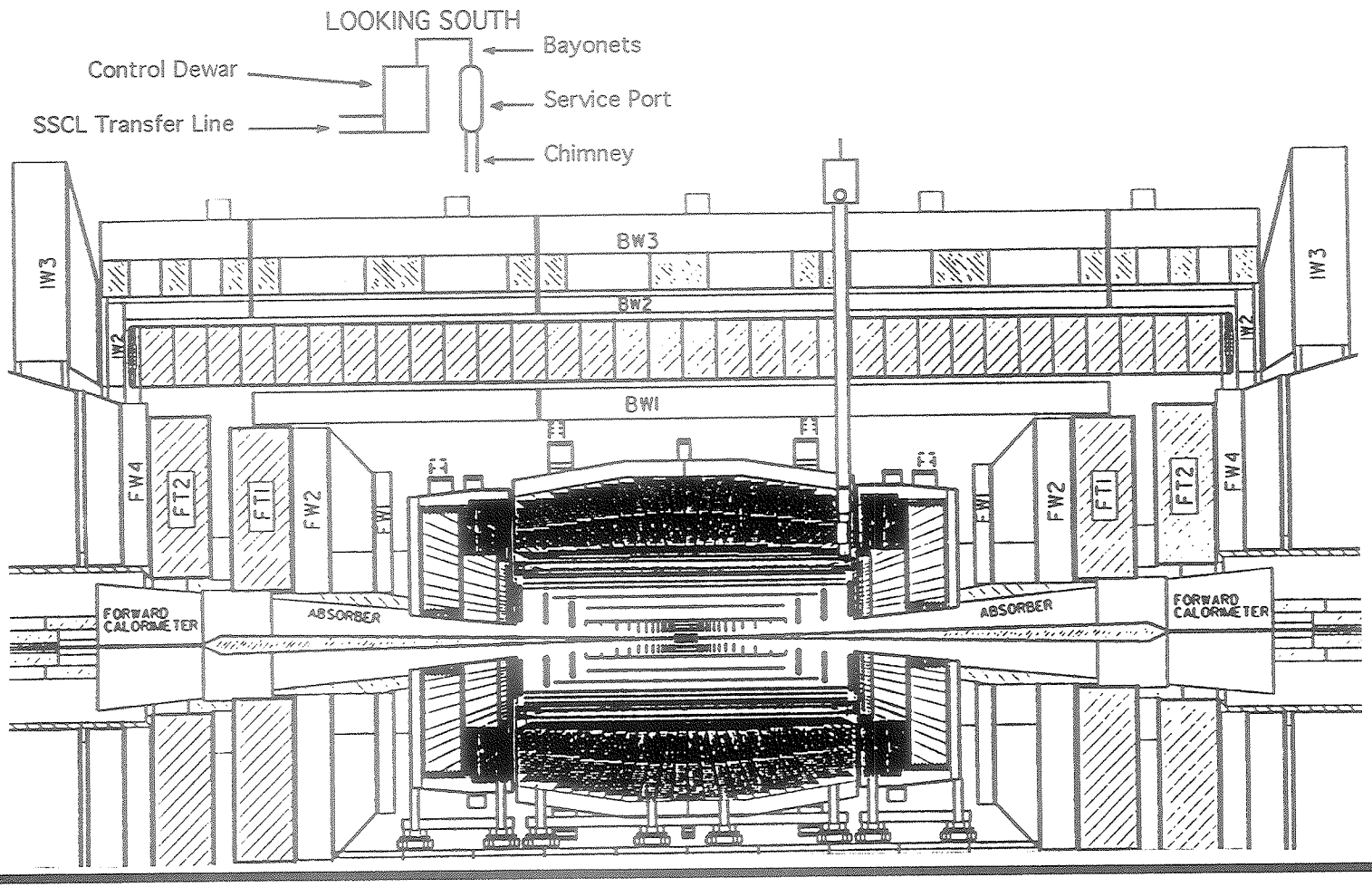

SDC SOLENOID SYSTEM

Table 5-2
Baseline design parameters of SDC solenoid.

Dimensions:		
Cryostat	Inner radius	1.70 m
	Outer radius	2.05 m
	Half length	4.389 m
Coil	Effective radius	1.84 m
	Half length	4.12–4.18 m
Conductor	Thickness	44 mm
Outer support cylinder	Thickness	31 mm
Electrical parameters		
Central field		2.0 T
Nominal current		8,000 A
Inductance		4.6 H
Stored energy		146 MJ
Stored energy / cold mass		7.4 kJ/kg
Typical charging time		1 hour
Mechanical parameters		
Effective cold mass		20 tonnes
Total weight		25 tonnes
Radial magnetic pressure		1.6 MN/m^2
Axial compressive force		11 MN

SDC SOLENOID SYSTEM

CRYOGENIC SYSTEM FLOW SCHEMATIC

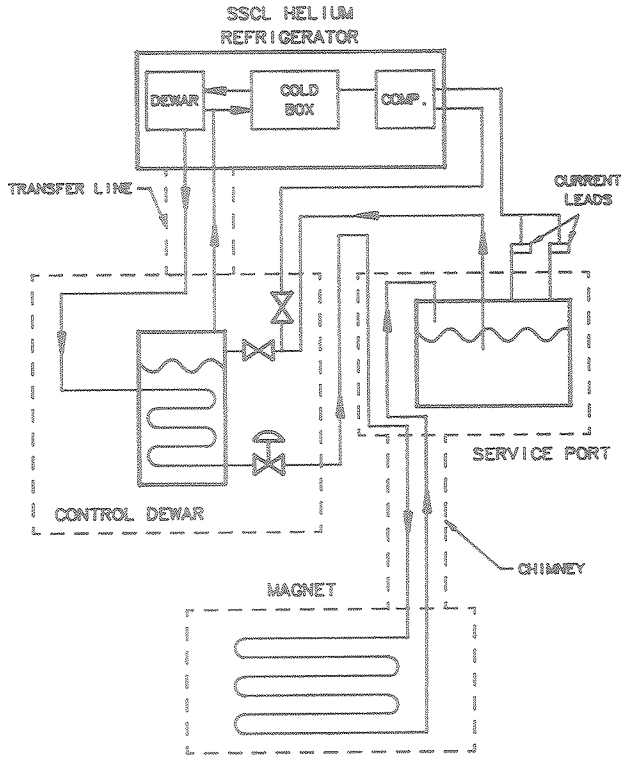

SDC SOLENOID SYSTEM

CROSS SECTION AT END OF SUPERCONDUCTING SOLENOID

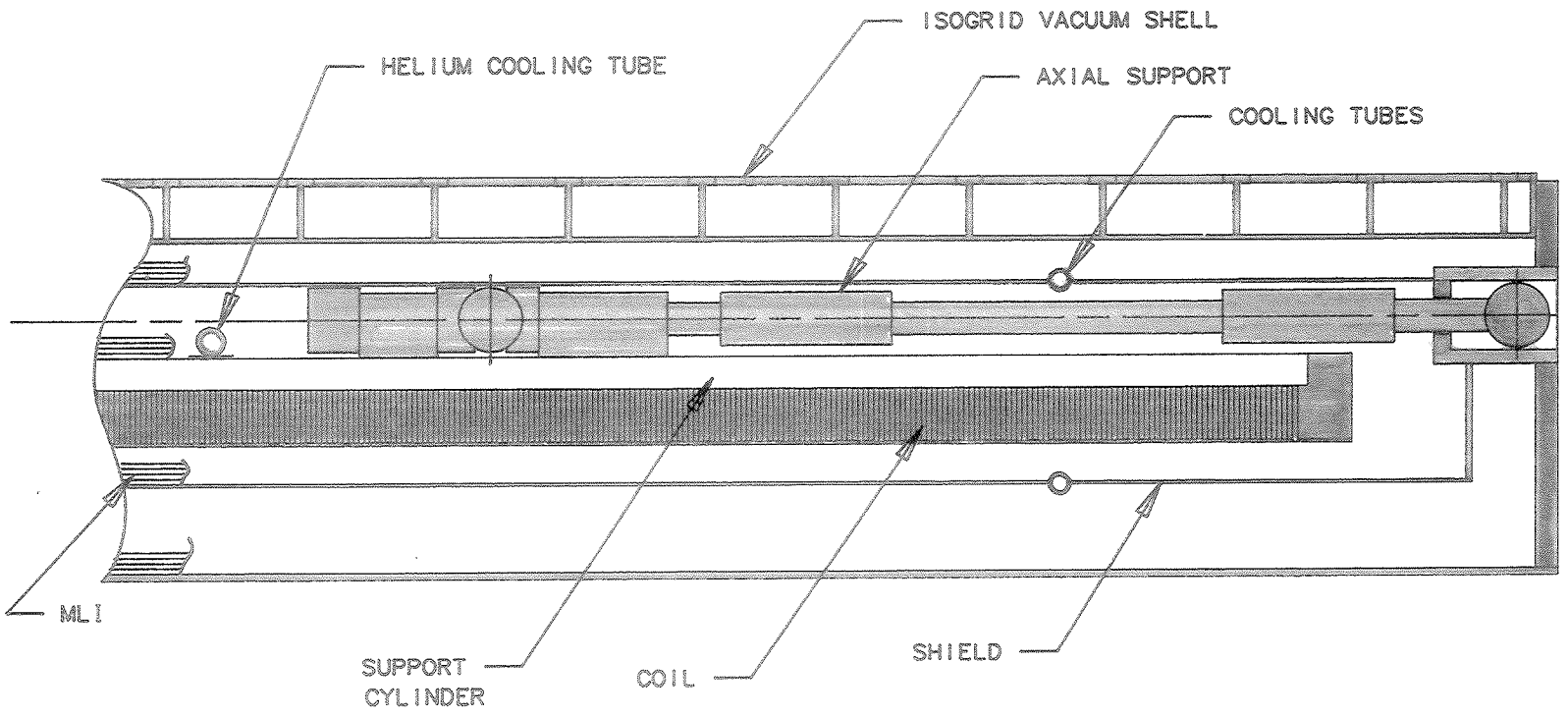

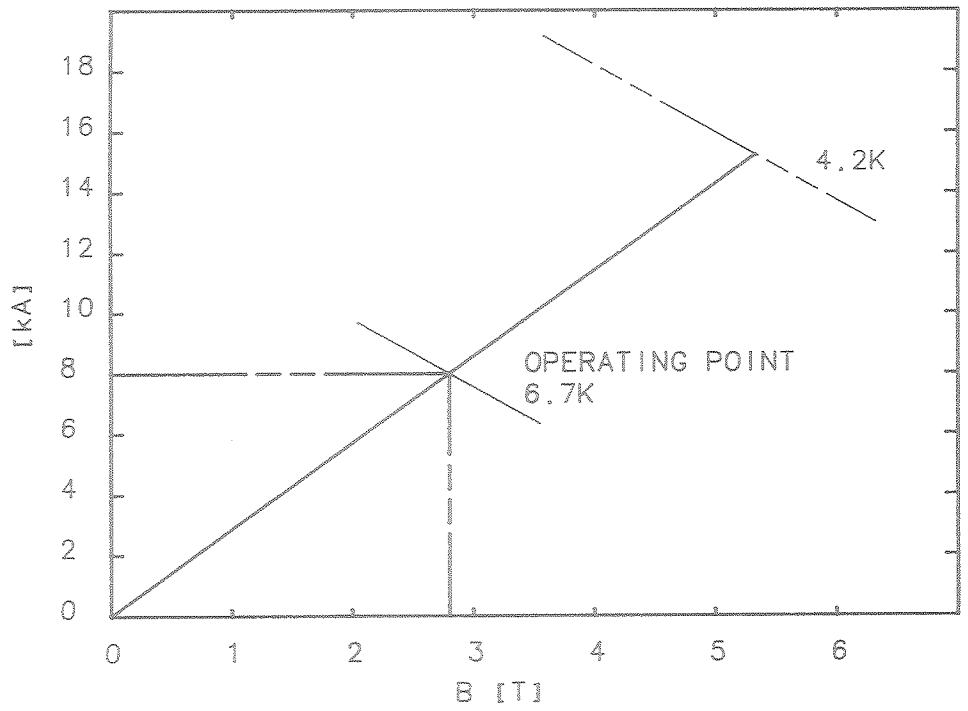

FIG. 5-11. Short-sample characteristics of the SDC conductor and the operating load line.

SDC SOLENOID SYSTEM

OUTER SUPPORT CYLINDER

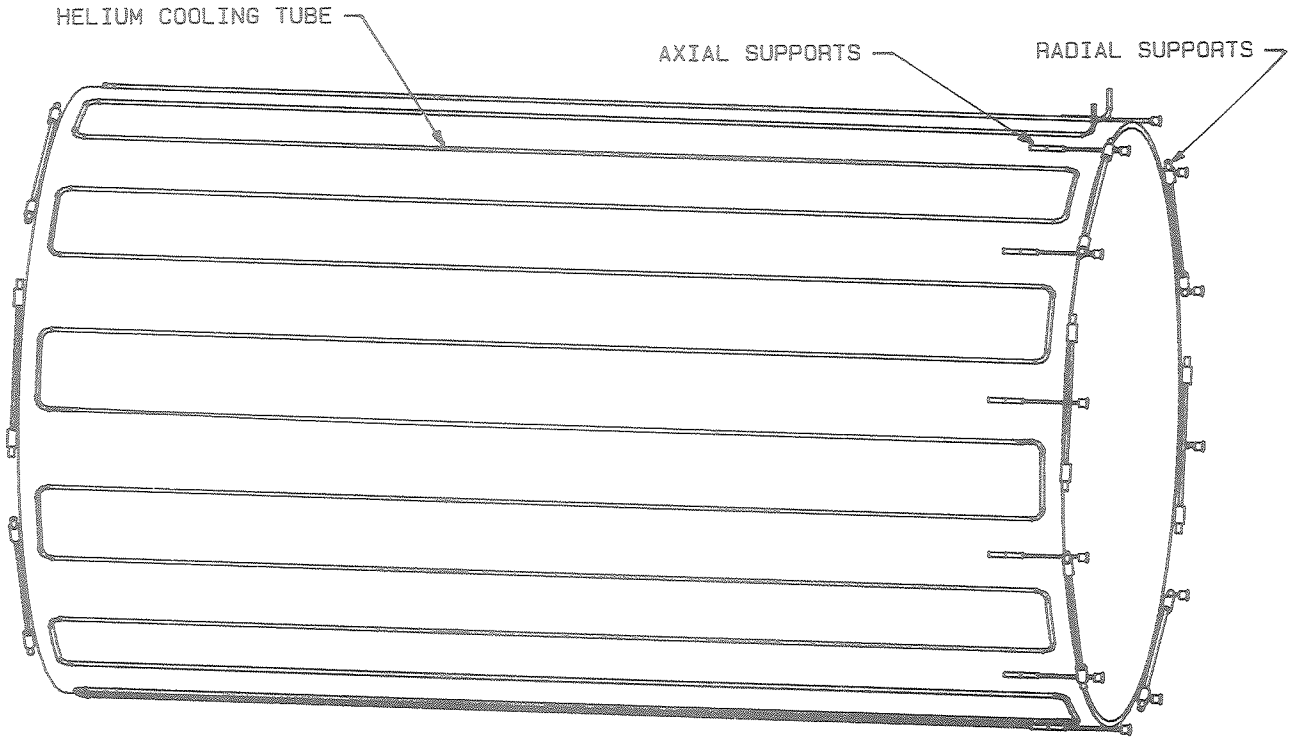

Table 5-4
Mechanical stability of the SDC coil.

Element	Material	Yield stress	Anal. model	FEA
Conductor	Pure Al (3N8)	67 MPa	52 MPa	52 Mpa
Cylinder	A-5083	169 MPa	52 MPa	< 52 MPa
Cylindrical bonding	Epoxy	(15 MPa)	< 4 MPa	< 1 MPa

SDC SOLENOID SYSTEM

SUPPORTS - PROTOTYPE SOLENOID

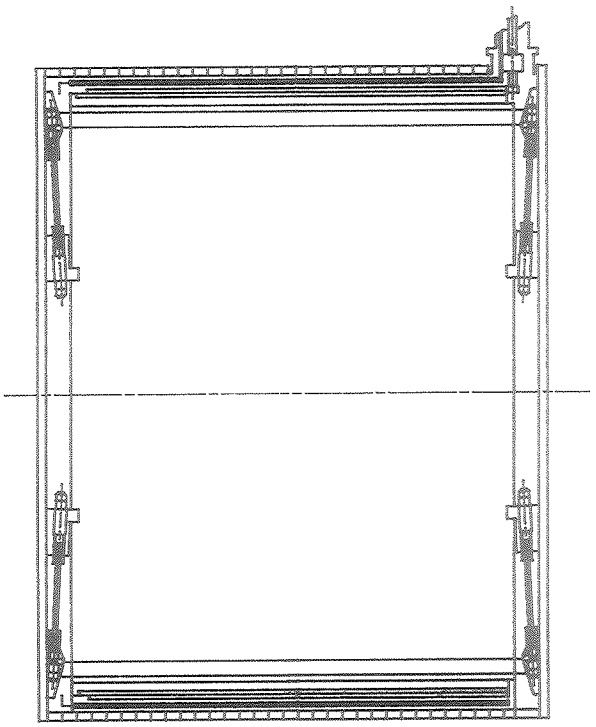

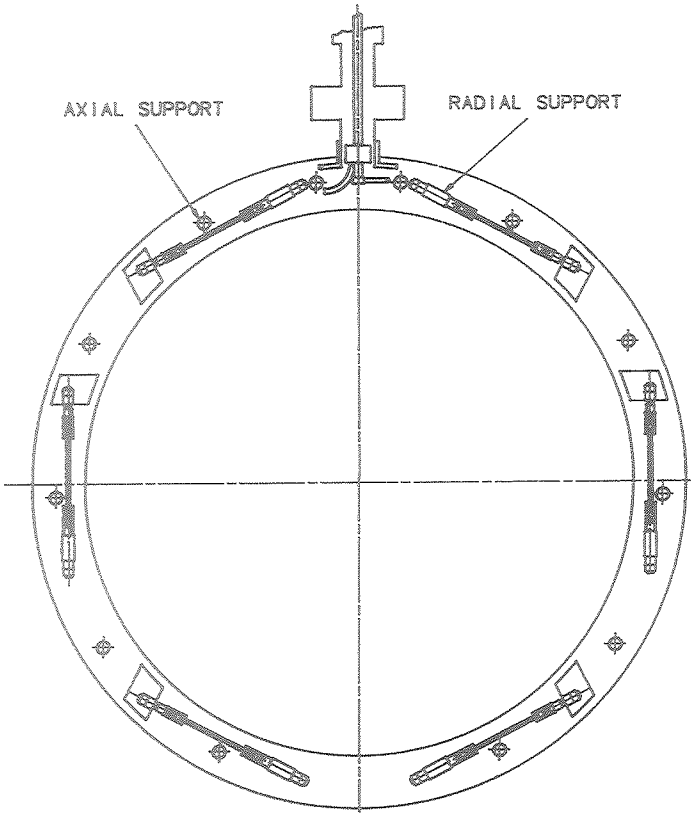

SDC SOLENOID SYSTEM

SOLENOID SUPPORT/ATTACHMENT BRACKET

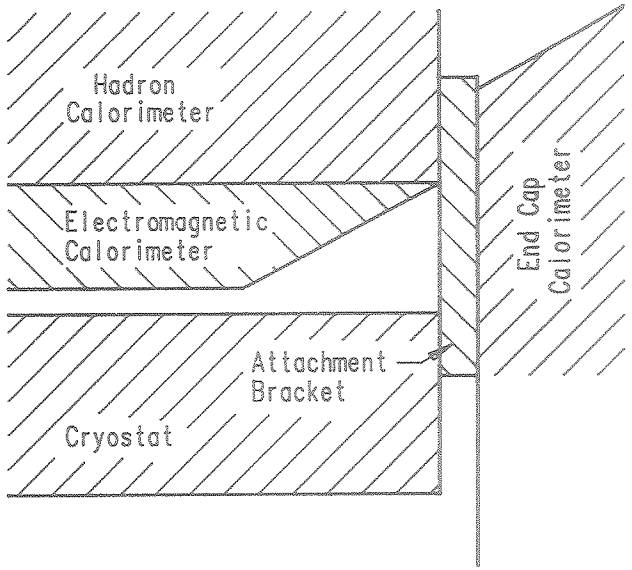

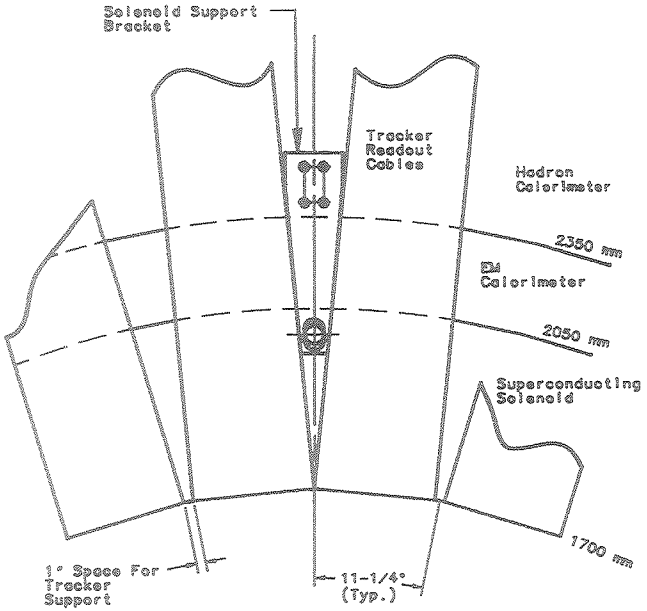

SDRC I-DEAS VI: Solid_Modeling 14-NOV-91 11:59:46

Dat .se: isogrid tank
View : No stored View
Task: Assembly
System: 3-RING1 (modified)

Units IN
Display : No stored Option
Bin: 1-MAIN
Update Level: Full

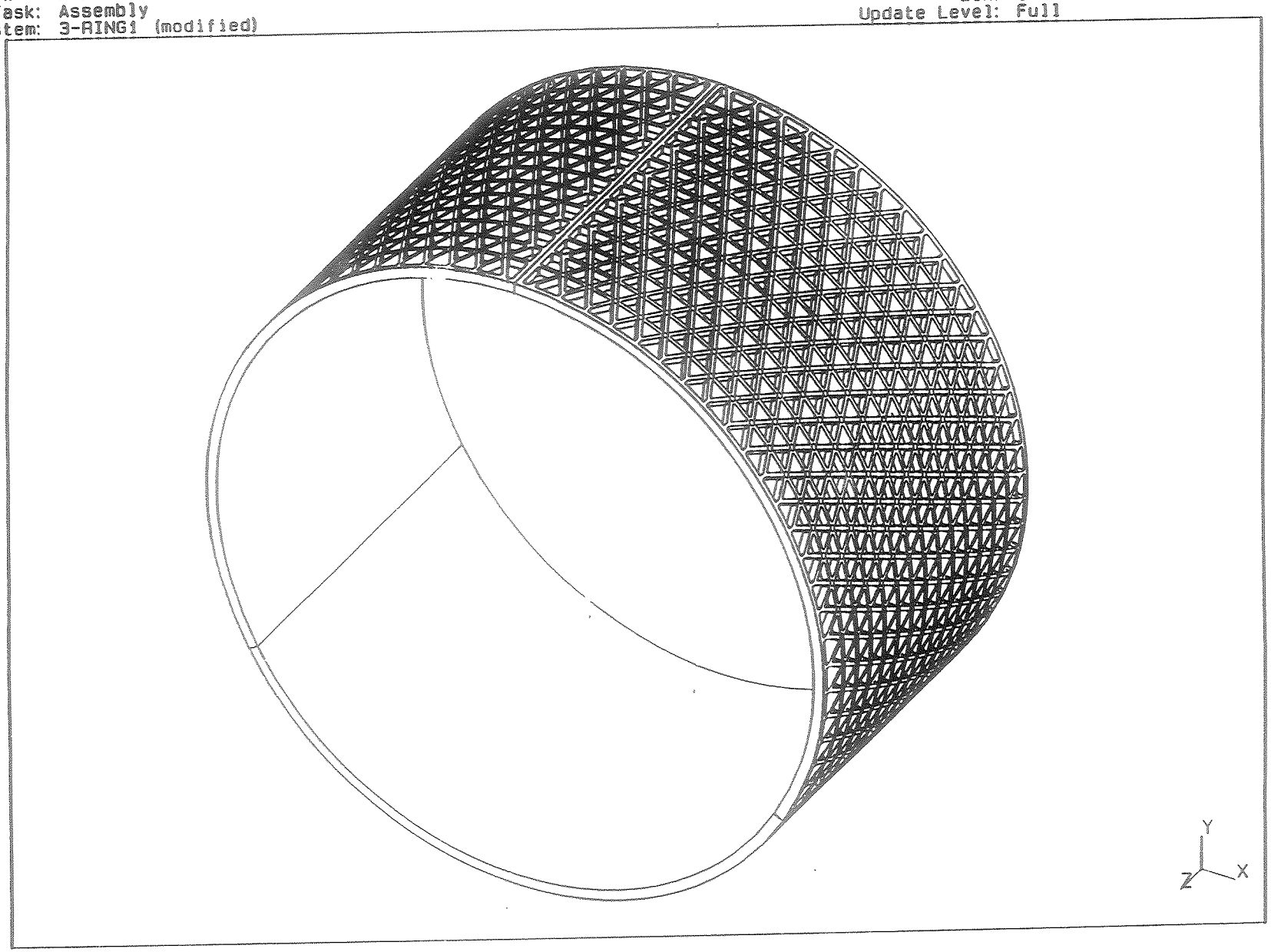

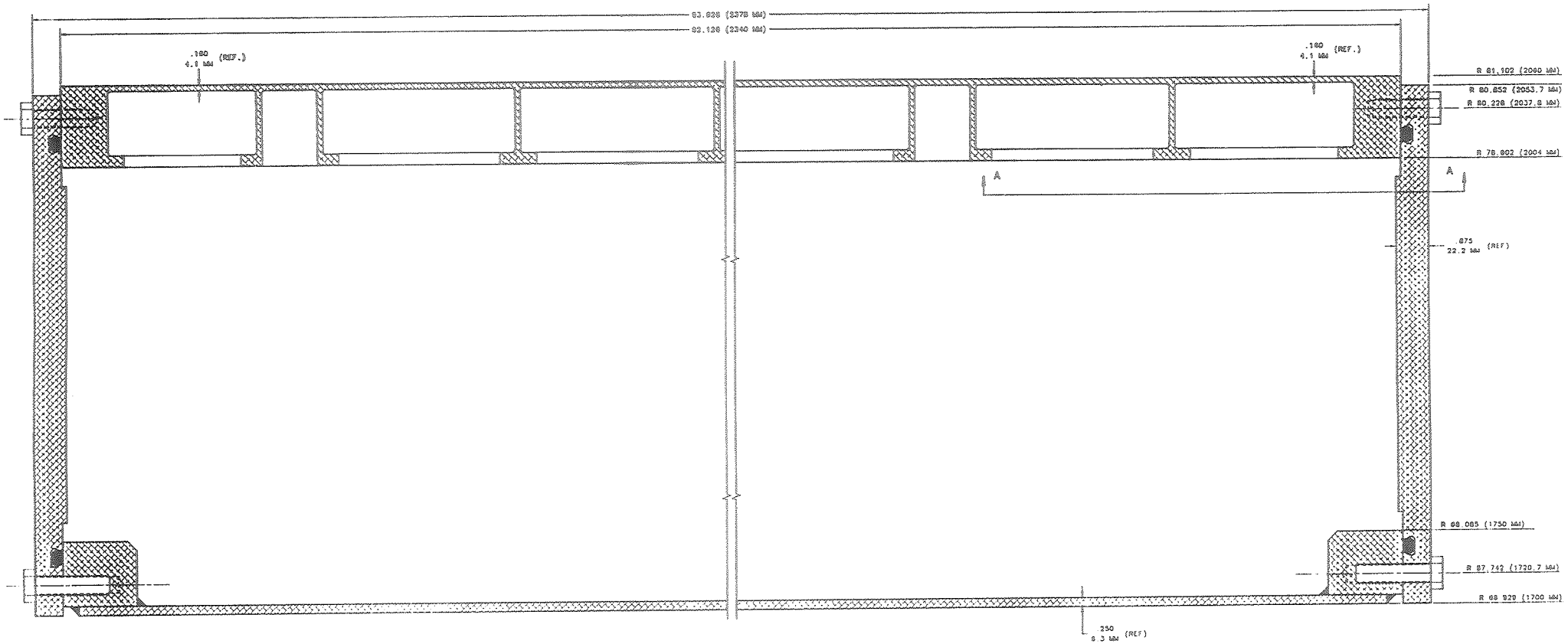

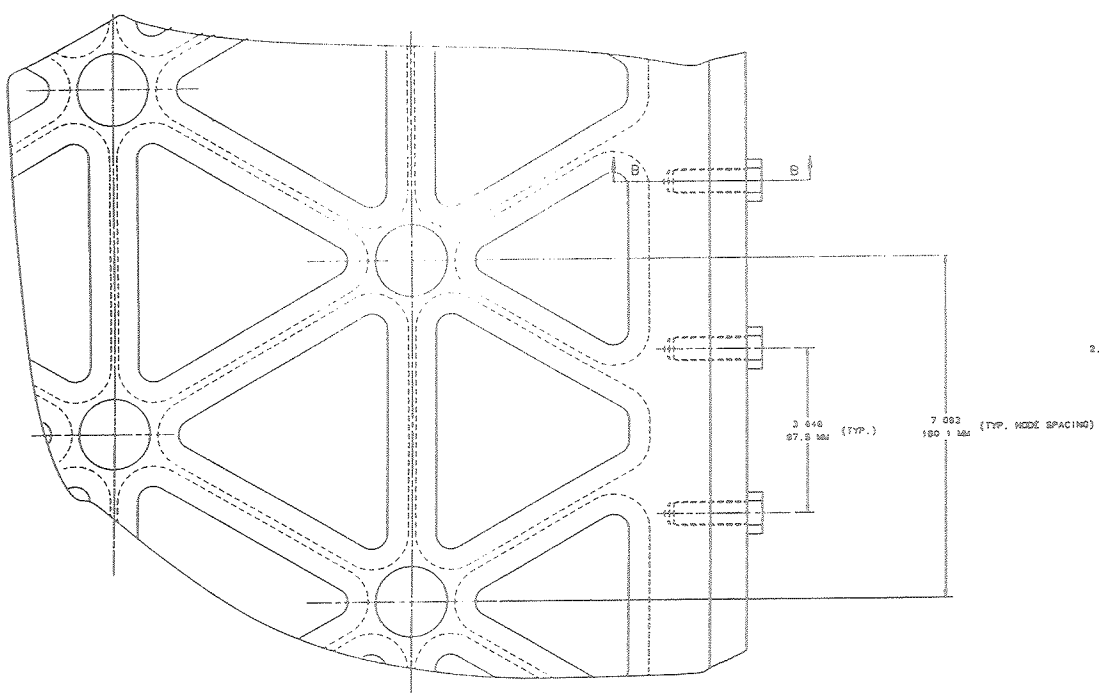

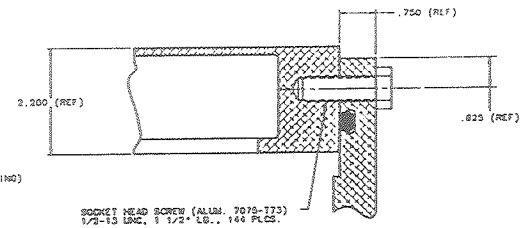

VIEW B-B

NOTE:

1. VACUUM TEST ... NO LEAK SHALL BE DETECABLE ON THE MOST SENSITIVE SCALE OF A HELIUM LEAK DETECTOR WITH A MINIMUM SENSITIVITY OF 10-9 ATM CC/SEC.

ITEM NO.	PART NO.	DESCRIPTION OR SIZE

PARTS LIST

UNLESS OTHERWISE SPECIFIED		ORIGINATED	C. GRUZIO
FRACTIONS	DECIMALS	ANGLES	DRAWN	D. FRIEND
±	±	±	CHECKED	
1. DEBURR ALL SHARP EDGES 1/64 MAX. 2. DO NOT SCALE DRAWING 3. DIMENSIONING AND TOLERANCING ON THIS SHEET ARE ...			APPROVED	
			USED ON	
			MATERIAL	

FERMI NATIONAL ACCELERATOR LABORATO
UNITED STATES DEPARTMENT OF ENERGY

SOLENOIDAL DETECTOR COLLABORATI(
SUPERCONDUCTING SOLENOID

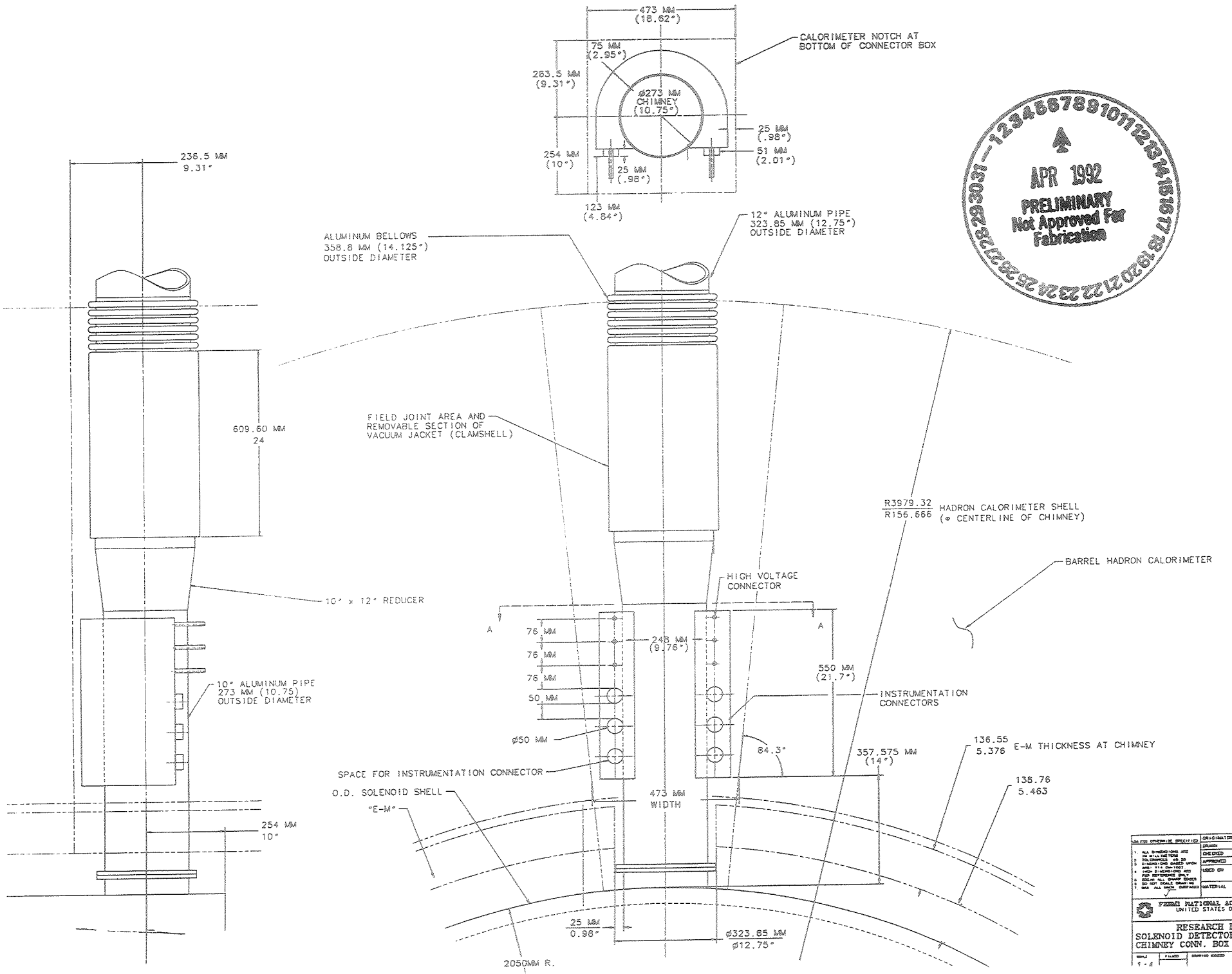
473 MM
(18.62")
75 MM
(2.95")
283.5 MM
(9.31")
ø273 MM
CHIMNEY
(10.75")
CALORIMETER NOTCH AT
BOTTOM OF CONNECTOR BOX
25 MM
(.98")
51 MM
(2.01")
254 MM
(10")
25 MM
(.98")
123 MM
(4.84")
236.5 MM
9.31"
ALUMINUM BELLOWS
358.8 MM (14.125")
OUTSIDE DIAMETER
12" ALUMINUM PIPE
323.85 MM (12.75")
OUTSIDE DIAMETER
609.60 MM
24
FIELD JOINT AREA AND
REMOVABLE SECTION OF
VACUUM JACKET (CLAMSHELL)
R3979.32
R156.666
HADRON CALORIMETER SHELL
(℄ CENTERLINE OF CHIMNEY)
BARREL HADRON CALORIMETER
10" x 12" REDUCER
HIGH VOLTAGE
CONNECTOR
A
A
76 MM
76 MM
76 MM
50 MM
248 MM
(9.76")
550 MM
(21.7")
INSTRUMENTATION
CONNECTORS
10" ALUMINUM PIPE
273 MM (10.75)
OUTSIDE DIAMETER
ø50 MM
84.3°
357.575 MM
(14")
136.55
5.376
E-M THICKNESS AT CHIMNEY
SPACE FOR INSTRUMENTATION CONNECTOR
O.D. SOLENOID SHELL
"E-M"
473 MM
WIDTH
138.76
5.463
254 MM
10"
25 MM
0.98"
ø323.85 MM
ø12.75"
2050MM R.
APR 1992
PRELIMINARY
Not Approved For
Fabrication
ORIGINATOR A. STEFANIK 11/91
DRAWN RKH 11/18/91
CHECKED
APPROVED
USED ON
MATERIAL
FERMI NATIONAL ACCELERATOR LABORATORY
UNITED STATES DEPARTMENT OF ENERGY
SSC
RESEARCH DIVISION
SOLENOID DETECTOR COLLABORATION
CHIMNEY CONN. BOX AND FIELD JOINT
1 - 4

REV.	DESCRIPTION	DRAWN	DATE
		APPROVED	DATE

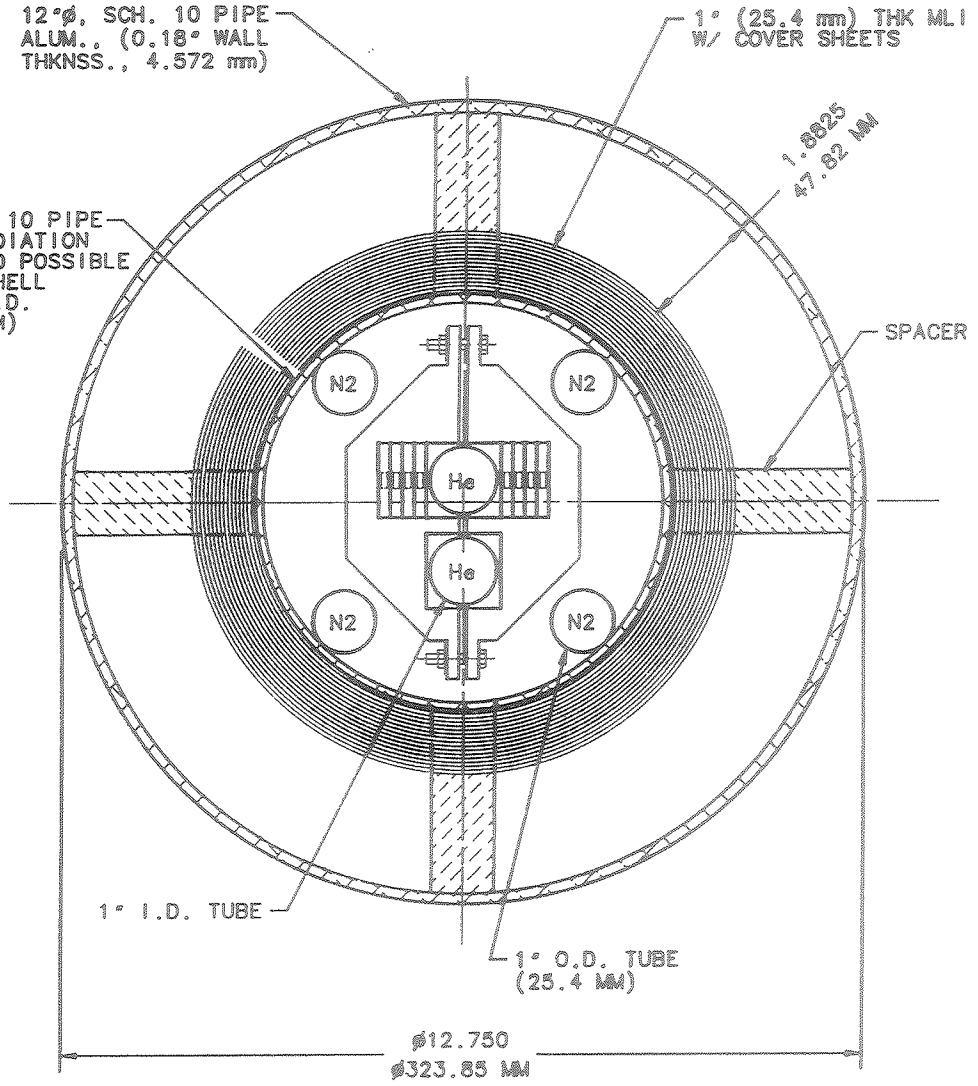

APR 1992
PRELIMINARY
Not Approved For
Fabrication

ITEM NO.	PART NO.	DESCRIPTION OR SIZE	QTY. REQ.

PARTS LIST

UNLESS OTHERWISE SPECIFIED			ORIGINATOR	A. STEFANIK	2/91
FRACTIONS	DECIMALS	ANGLES	DRAWN	D. FRIEND	2/12/91
±	±	±	CHECKED		
1. BREAK ALL SHARP EDGES 1/64 MAX. 2. DO NOT SCALE DRWG. 3. DIMENSIONING IN ACCORD WITH ANSI Y14.5 STD'e.			APPROVED		
			USED ON		
√ MAX. ALL MACHINED SURFACES			MATERIAL		B

FERMI NATIONAL ACCELERATOR LABORATORY
UNITED STATES DEPARTMENT OF ENERGY

SOLENOIDAL DETECTOR COLLABORATION
SUPERCONDUCTING SOLENOID; TYPE I
CHIMMNEY CROSSSECTION; 12" NOM.

SCALE	DRAWING NUMBER	SHEET NO.	REV.
HALF		1	

SDC SOLENOID SYSTEM

POWER SUPPLY CIRCUIT

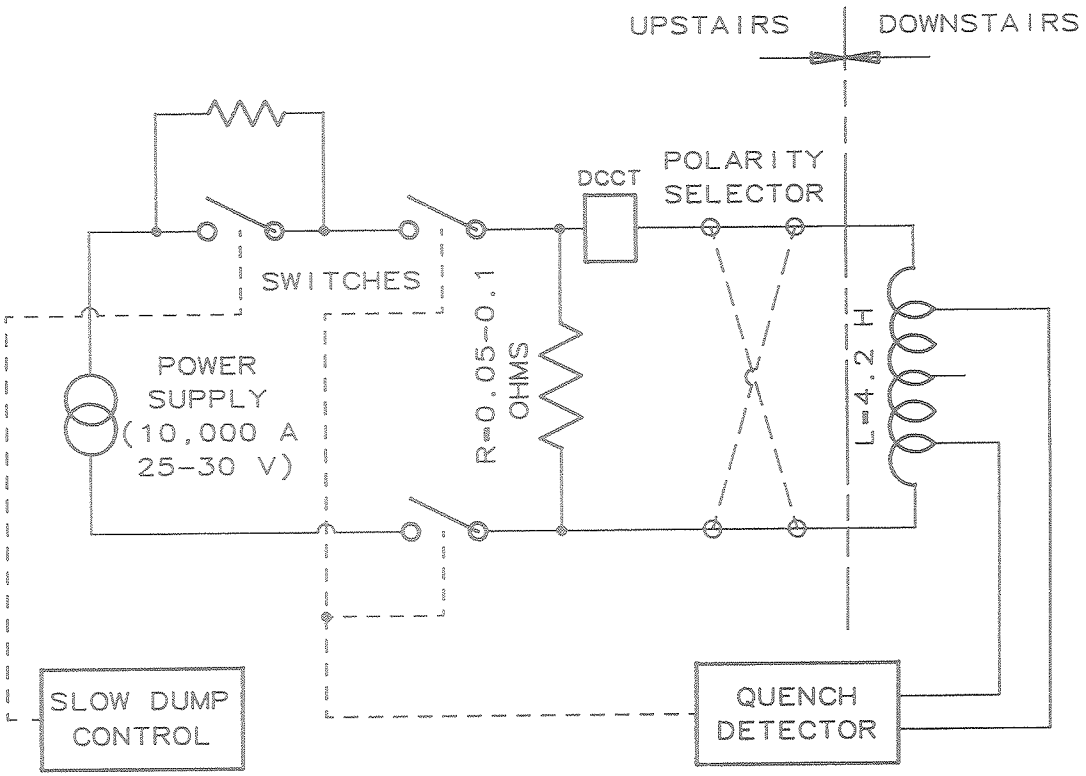

SDC SOLENOID SYSTEM

INTERFACES

1. WITH SSCL:

   - SUPPLY AND RETURN OF CRYOGENS
   - POWER SUPPLY CIRCUIT
   - CONTROL AND INSTRUMENTATION
   - RELIEF VALVE/VENT DISCHARGE INTO HALL
   - SAFETY ANALYSIS
   - DOCUMENTATION

SDC SOLENOID SYSTEM

INTERFACES

2. CRYOSTAT VACUUM VESSEL - DETECTOR:

   - CLEARANCES BETWEEN CALORIMETER AND CENTRAL TRACKING CHAMBER

   - SUPPORTS WHICH BOLT TO THE BARREL OF THE HADRON CALORIMETER

SDC SOLENOID SYSTEM

INTERFACES

3. CHIMNEY - DETECTOR:

- LOCATION ON SOLENOID
- ROUTE
- SIZE/SHAPE
- RELATIVE MOVEMENTS
- FIELD JOINT
- INSTRUMENTATION WIRING

SDC SOLENOID SYSTEM

INTERFACES:

4. VLPC SYSTEM

5. MAGNETIC FIELD

6. SSCL- KEK- FNAL COMMUNICATION

7. DETECTOR GROUP COMMUNICATION

SDC SOLENOID SYSTEM

MAJOR PARTICULAR HAZARDS AND ABATEMENT STRATEGIES

1. NEW DESIGN CONCEPTS AND ADVANCES IN TECHNOLOGY:

   ABATEMENT:

   - ENGINEERING ANALYSIS

   - TESTING COMPONENTS

   - QUALITY CONTROL

   - PROVING DESIGN CONCEPTS BY BUILDING, OPERATING AND TESTING THE PROTOTYPE SOLENOID

SDC SOLENOID SYSTEM

MAJOR PARTICULAR HAZARDS AND ABATEMENT STRATEGIES

2. RATIO OF STORED ENERGY TO COLD MASS, E/M RATIO

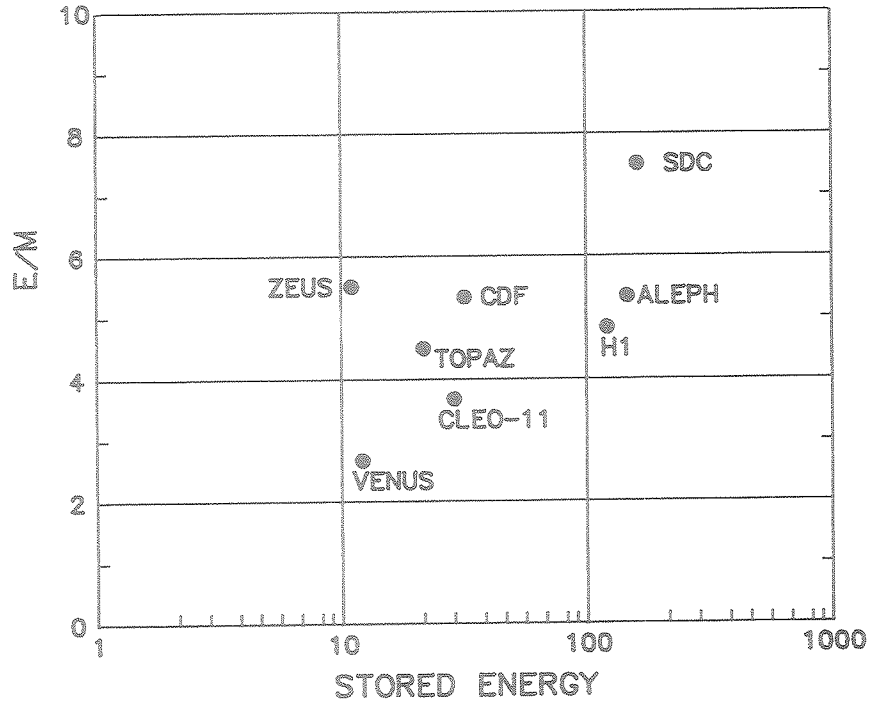

SDC SOLENOID SYSTEM

MAJOR PARTICULAR HAZARDS AND ABATEMENT STRATEGIES

2. RATIO OF STORED ENERGY TO COLD MASS, E/M RATIO:

ABATEMENT:

- DESIGN FOR THE SOLENOID TEMPERATURES GENERATED BY OPEN CIRCUIT QUENCHES

- DESIGN FOR THE ELECTROMAGNETIC AND STATIC LOADS

- PROVE THE DESIGN IN THE PROTOTYPE SOLENOID

SDC SOLENOID SYSTEM

MAJOR PARTICULAR HAZARDS AND ABATEMENT STRATEGIES

3. QUENCH - ABRUPT TRANSITION FROM SUPERCONDUCTING TO NORMAL, RESISTIVE STATE

   ABATEMENT:

   - DESIGN FOR FAST QUENCH PROPAGATION VELOCITY TO DISTRIBUTE THE RELEASED ENERGY OVER THE ENTIRE COIL

   - POSSIBLE USE OF QUENCH PROPAGATION STRIPS

   - PROVIDE RELIEF VALVES ON THE HELIUM COOLING TUBE CIRCUIT

SDC SOLENOID SYSTEM

QUENCH PROPAGATION STRIP

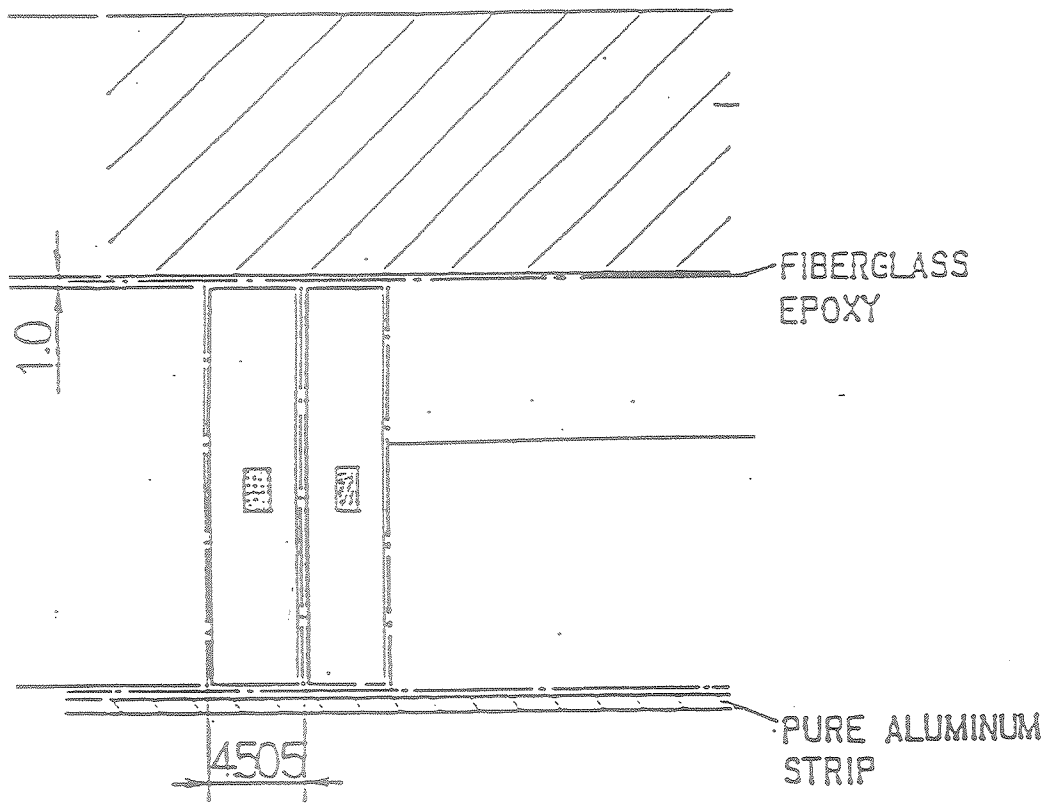

SDC SOLENOID SYSTEM

MAJOR PARTICULAR HAZARDS AND ABATEMENT STRATEGIES

4. OVERSIZED POWER SUPPLY (EXCESSIVE CURRENT):

ABATEMENT:

- DO NOT OVERSIZE

- CONTROL SYSTEM MONITOR AND TAKE CORRECTIVE ACTION (LIMIT CURRENT OUTPUT/SHUTDOWN)

- DESIGN THE SOLENOID FOR AN OPEN CIRCUIT QUENCH USING THE MAXIMUM POSSIBLE STORED ENERGY

SDC SOLENOID SYSTEM

GENERAL HAZARDS

1 - Oxygen deficient environment for personnel caused by the release of helium or nitrogen from the solenoid system. An unventilated, confined space is a notable, potential oxygen deficient environment because of the lack of ventilation. General mitigating actions include limiting the release rate, ODH (Oxygen Deficiency Hazard) training, and providing ventilation, oxygen monitors (both fixed and individually carried units), individual air supply packs, and ODH alarm devices in the experimental hall.

2 - General cryogenic hazards to personnel. These hazards include: exposure to cryogenic temperatures resulting in freezing damage to bodily tissue, frostbite (cryogenic burns), hypothermia, vision impairment caused by fog formation, and oxygen deficient environments that can result in injuries, asphyxia or death. General mitigating actions include training, use of protective wear, safety procedures and safe work practices.

3 - General electrical safety hazards. General mitigating actions include designing, installing and testing the power supply and control systems in accordance with applicable design codes and standards, and good engineering practice.

4 - Magnetic field hazards to personnel. This hazard includes health and work hazards. Work hazards arise because of the force of attraction exerted on metallic objects, such as tools and equipment, by the magnetic field. General mitigating actions include magnetic field safety training, magnetic field survey, and safety procedures and safe work practices for working around the energized solenoid magnet.

SDC SOLENOID SYSTEM

GENERAL HAZARDS

5 - Safety and operating performance hazards associated with a component or part that does not comply with its design specification. Mitigating actions include inspecting and testing an item to assure compliance with its specification, and rejection of unacceptable items (quality control). Inspection and testing requirements that are to be performed by a supplier are defined in the design specification. Inspection includes: nondestructive methods (such as: visual, leak testing, radiographic, checking dimensions, etc.), and destructive methods. Testing includes: mechanical loading, pneumatic/hydrostatic, and determining operating performance.

6 - High stress in components caused by thermal, pressure, magnetic, weight and acceleration loads. The general mitigating action is to limit stresses in components to allowable values by designing them for the forces to which they will be subjected. Allowable stress values are established by following applicable design codes and standards, and good engineering practice.

6.1 - Thermal stresses will develop in a component that is restrained from moving when subjected to a temperature change. Thermal stress will also occur in an interconnecting component if it is restrained from moving in response to thermal movements of the components it connects.

The mitigating action includes designing components and systems with sufficient flexibility to limit thermal stress to allowable values.

SDC SOLENOID SYSTEM

GENERAL HAZARDS

6.2 - An overpressure condition exists in a component when it is pressurized above its design value. Exposure of a trapped volume to a source of pressure greater than its design value, or pressurizing a component faster than the pressurizing medium can be vented from it are examples of components at overpressure conditions. The pressurizing medium for both of these examples can originate from another component in the system, an external source, or uncontrolled vaporization or expansion of a fluid inside the component.

The mitigating action includes installing relief devices to limit pressures to design values.

6.3 - The magnetic field produced by the superconducting solenoid causes forces to be developed in the superconducting solenoid magnet, the detector and objects/equipment in areas outside the detector.

6.4 - Gravity causes the weight load.

6.5 - Acceleration forces occur during shipping, installation and seismic events.

SDC SOLENOID SYSTEM

GENERAL HAZARDS

7 - Materials of construction not suited for the intended service. General mitigating actions include establishing suitability (e.g., for the operating temperature, radiation exposure, etc.) based on previous experience, code data, material specifications or tests, and verifing physical properties and chemistry by obtaining the material test report or certificate of compliance for the material, by using the material identification marking system specified by the applicable material specification, or by testing.

8 - Accidental exposure of non-cryogenic materials to cryogenic temperatures. Materials that are not suitable for cryogenic temperatures can be damaged by exposure to cryogens. This hazard occurs when a cryogen accidentally escapes the cryogenic system and contacts a non-cryogenic material. The mitigating action is to prevent accidental contact by protecting the non-cryogenic material with a barrier or by changing a component's location.

9 - Hazards caused by equipment/instrumentation malfunctions, power failure, or equipment/instrumentation/operator errors. The general mitigating action is to design all systems to fail safe, to alarm abnormal process conditions and to initiate corrective or shutdown actions.

SDC SOLENOID SYSTEM

GENERAL HAZARDS

10 - Loss of insulating vacuum. Insulating vacuums can be lost or degraded by leaks that develop or by inadvertantly opening a valve. This hazard results in increased heat leak to the cryogenic system and to the pressurization of vacuum enclosures. Increasing the heat leak can lead to an overpressure condition in a component because it can cause uncontrolled vaporization or expansion of liquid cryogens. Increasing heat leak to the superconducting solenoid magnet can cause it to quench, as discussed on the conceptual safety assessment forms. Pressurizing a vacuum enclosure can result in an overpressure condition. Mitigating actions include the actions noted under the high stress hazard for an overpressure condition and under operating malfunctions/errors.

SDC SOLENOID SYSTEM

RISK ASSESSMENT AFTER ABATEMENT

1. PERSONNEL AND THE ENVIRONMENT ARE NOT EXPOSED TO HAZARDS IN RISK ZONES 1 AND 2.

2. EQUIPMENT (EQUIPMENT LOSS, TEST UNIT DOWNTIME AND DATA COMPROMISE) ARE NOT EXPOSED TO HAZARDS IN RISK ZONES 1 AND 2 IN MOST CASES.

SDC SOLENOID SYSTEM

RISK ASSESSMENT AFTER ABATEMENT

3. EXAMPLES OF EQUIPMENT EXPOSED TO HAZARDS IN RISK ZONES 1 AND 2:

   - LOSS OF THERMAL INSULATION VACUUM, 1-C-1

   - THERMAL SHORT AFTER FINAL ASSEMBLY, 1-D-2

   - ISOGRID OR HONEYCOMB OUTER VACUUM SHELL IS UNACCEPTABLE AFTER IT IS BUILT, 1-D-2. REPLACE WITH NEW ISOGRID OR HONEYCOMB SHELL (1-D-2) OR SOLID PLATE (1-E-3).