Fermilab

SDC SOLENOID DESIGN NOTE #171

TITLE: SDC Meeting at KEK, February 17 and 18, 1992

AUTHOR: Chuck Grozis

DATE: Feb 24, 1992

These are the viewgraphs from the meeting.

Date: February 17 and 18, 1992
Place: KEK Main Building meeting room (1st floor, next to Library)

Participants: (tw be)
Robert Kephart and Charles Grozis (FNAL)
Taka Kondou, Yoshikuni Doi, Yasuhiro Makida, Hiroshi Yamaoka
Nobuhiro Kimura, Ken-ichi Tanaka and Akira Yamamoto (KEK)
Susumu Mine, Hiroshi Mukai (Toshiba)
Hideo Kakui and Isamu Oono (IHI)

Agenda:

Feb. 17,

11:00 Opening address ..... T. Kondou / A. Yamamoto

11:10 General progress at Fermilab..... R. Kephart

11:20 General progress at KEK ..... A. Yamamoto

11:30 Changing of magnet length and its effect.....Kephart / Yamamoto

11:45 Magnetic force calculation ..... K. Tanaka
R. Kephart / R. Wands

12:15 Lunch break

13:15 Vacuum vessel
Isogrid option .....C, Grozis
Honeycomb option.....H. Yamaoka / I. Oono
Discussion on prototype .. ..all

14:30 Coil and Magnet Supporting:
FNAL option.....C. Grozis
KEK option.....Y. Makida / S.Mukai
Discussion .....all

15:15 Stability and quench analysis,.....Y. Makida

15:45 Chimney design ....A. Yamamoto / C. Grozis

16:15 Cryogenics Scheme.....Y. Doi / A. Yamamoto

16:30 Magnet Installation into the Detecto.....A. Yamamoto

16:45 Summary ..... T. Kondou / A. Yamamoto

17:00 Adjorn

Feb. 18,

---- Fermilab - KEK meeting ------

9:15 Discussions for further work

Magnetic force calculation

1. The axsial compressive force and the force between coil and iron
2. Decentering force
3. Stress in the coil

K.Tanaka (KEK)

- about model for calculation

  <Fig. 1>

  Coil and support cylinder part consists of only one material, without coil and support boundary.

  Iron part is filed with iron. It has no air gap.

  <Fig. 2>

  This shows the sizes of coil and others.

  Where Dcy is the distance between coil end and iron.

  Coil thickness (0.075) consists of conductor and support-cylinder thickness.

- about tables

  <Tab. 1>

  This shows the changes of axial compressiv force in the coil and attractive force between coil and iron depending on Dcy.

  Where the compressiv force [F(coil)] is integrated from coil center to end.

< Tab. 2 >

This shows the coil decentering force.
"dz" in this table means the coil slight delocation in z-axsis around each E_{cy}.

< Fig. 3, Fig. 4 >

These data come from Tab. 1 and Tab. 2
The lines in Fig. 4 are almost linear in this region.

< Fig. 5 >

This shows each stresse in the coil.

1

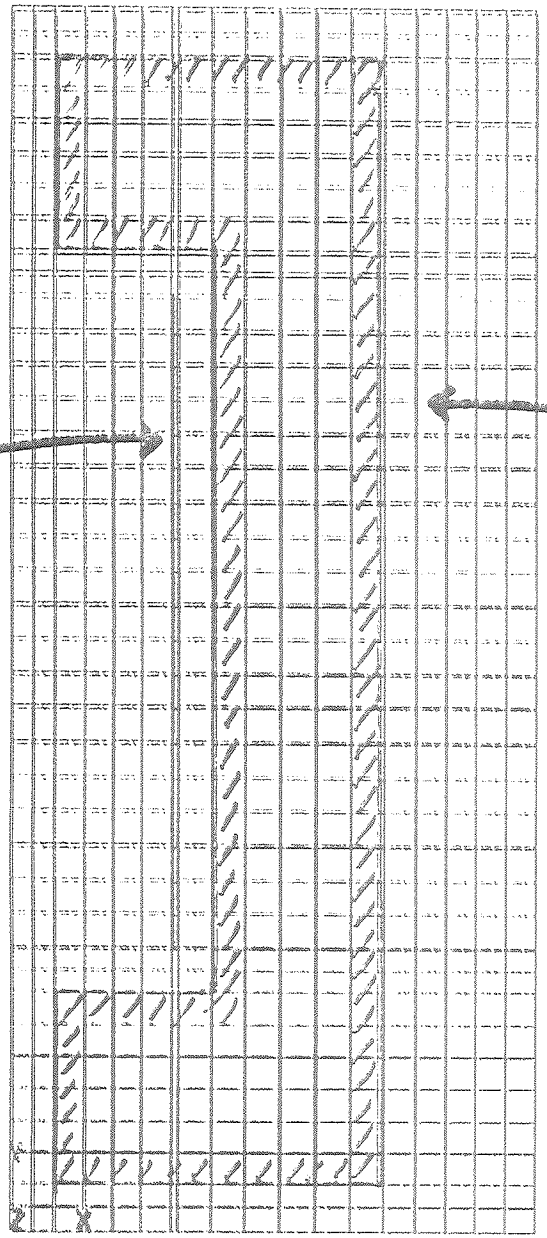

Dcy=0.3 dz=-0.00

ANSYS 4.4A
FEB 17 1992
9:35:49
PREP7 ELEMENTS
MAT NUM

ZV =1
DIST=7.7
XF =3
YF =7

The model for calculation

(unit : m)

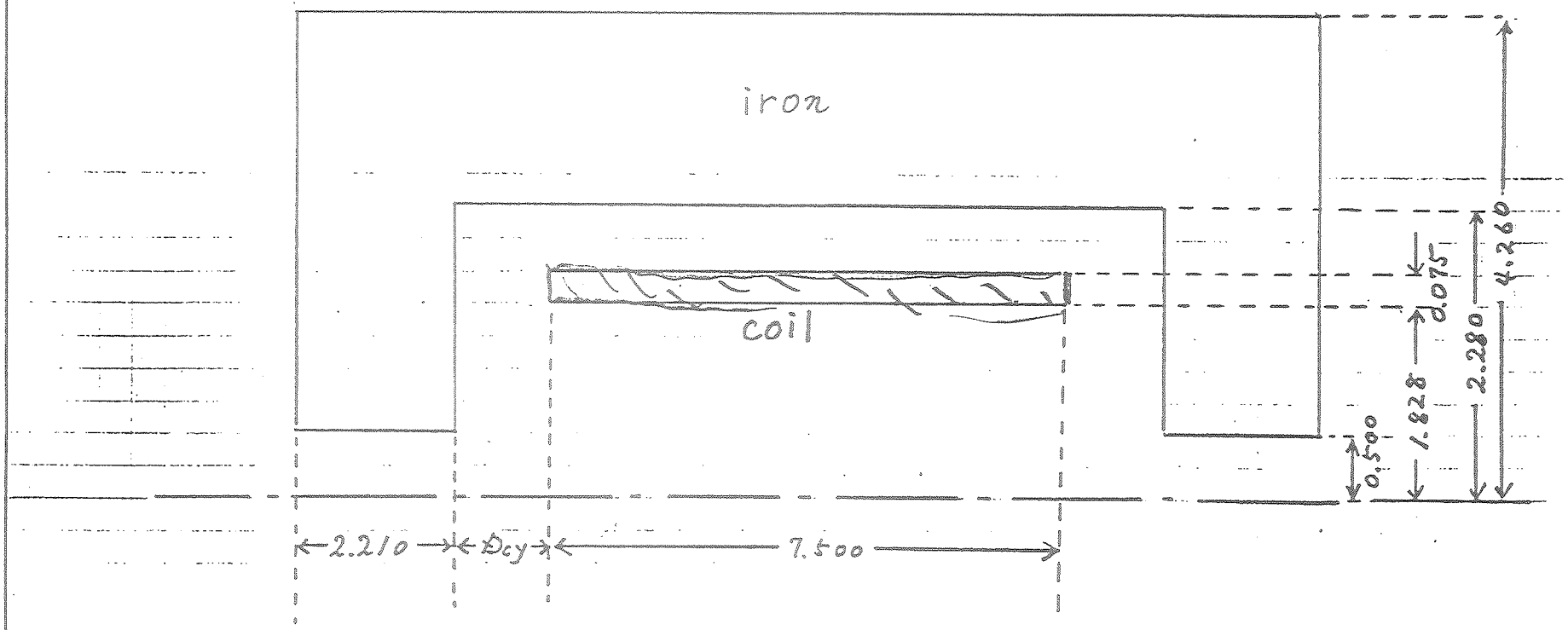

NATIONAL LABORATORY FOR HIGH ENERGY PHYSICS

Tab. 1 total axsial compressive force and the force between coil and iron

1	Dcy[cm]	F(coil) [ton]	F(coil-yoke) [ton]	Bc [T]
2	20	693.858	1014.458	2.01488
3	30	906.167	783.570	2.00792
4	40	1056.976	636.405	2.00246
5	50	1188.163	496.336	1.99788
6	60	1294.229	383.795	1.99415

Tab. 2 decentering force

1	dz[cm]	Fz[ton] (Dcy=20)	Fz[ton] (Dcy=30)	Fz[ton] (Dcy=40)	Fz[ton] (Dcy=50)	Fz[ton] (Dcy=60)
2	0	0.000	0.000	0.000	0.000	0.000
3	0.5	25.910		15.606	12.541	
4	1	51.827	42.929	31.214	25.083	20.956
5	2	103.705		62.444	50.178	
6	5	260.131	215.215	156.408	125.651	104.981

Tab. 2' magnetic flux dencity at coil center

1	dz[cm]	Bc[T] (Dcy=20)	Bc[T] (Dcy=30)	Bc[T] (Dcy=40)	Bc[T] (Dcy=50)	Bc[T] (Dcy=60)
2	0	2.01488	2.00670	2.00246	1.99788	1.99300
3	0.5	2.01494		2.00250	1.99791	
4	1	2.01501	2.00680	2.00254	1.99795	1.99303
5	2	2.01515		2.00264	1.99803	
6	5	2.01567	2.00750	2.00298	1.99831	1.99339

Fig.1

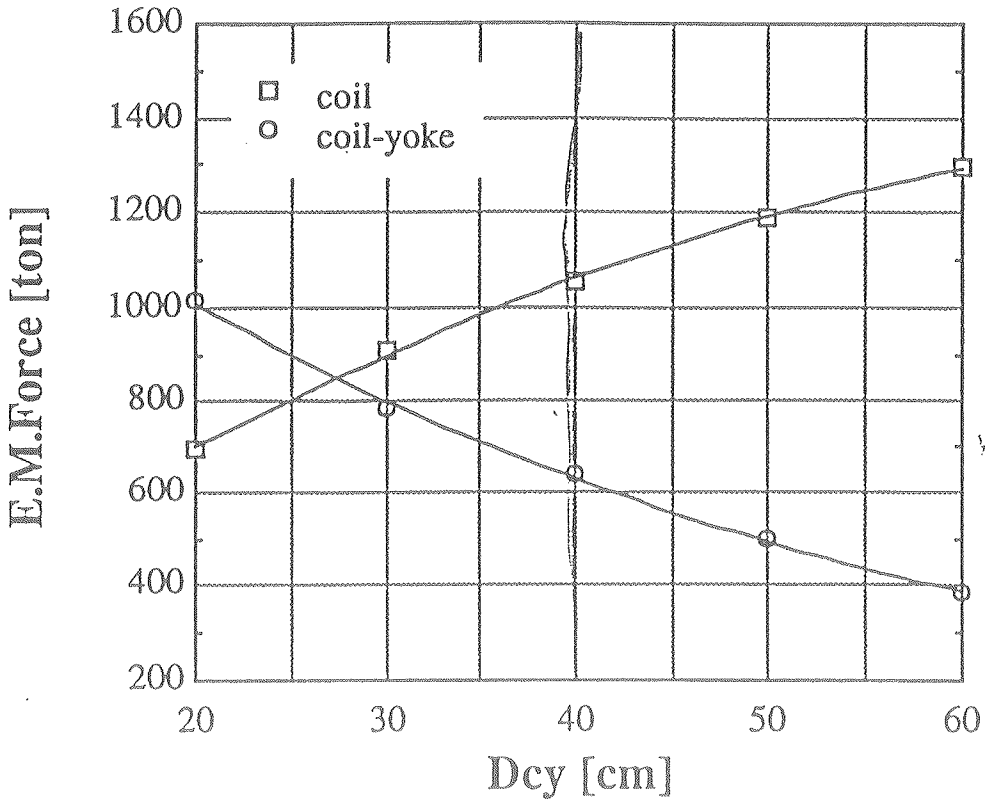
1600
1400
1200
1000
800
600
400
200
E.M.Force [ton]
coil
coil-yoke
20
30
40
50
60
Dcy [cm]

Fig.2

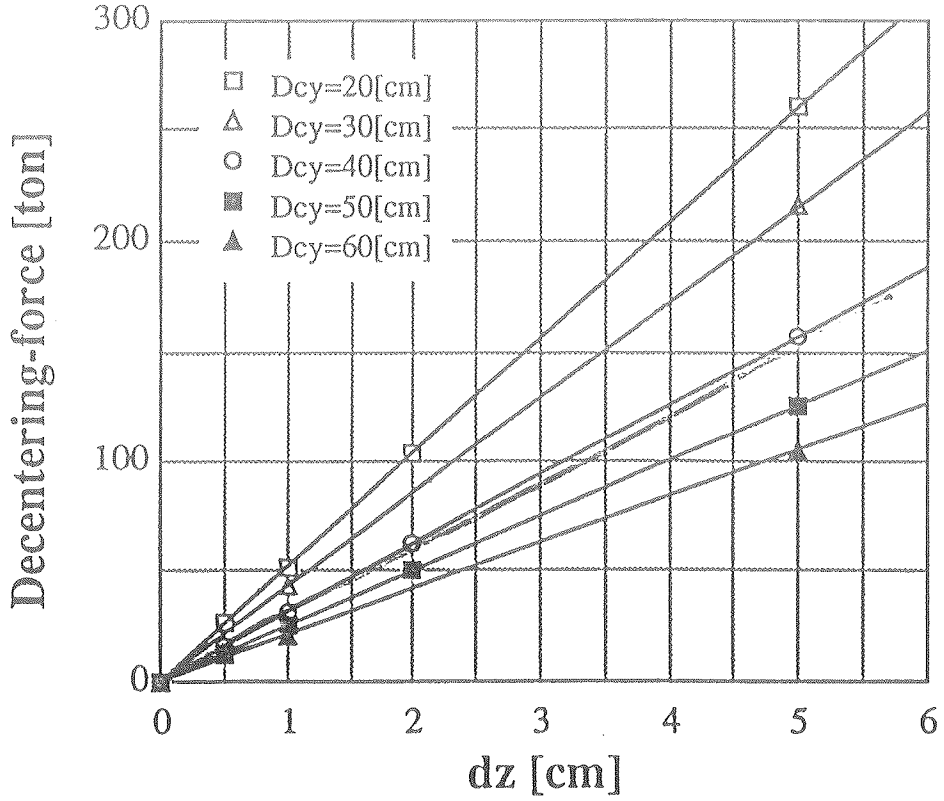
300
200
100
0
Decentering-force [ton]
Dcy=20[cm]
Dcy=30[cm]
Dcy=40[cm]
Dcy=50[cm]
Dcy=60[cm]
0
1
2
3
4
5
6
dz [cm]

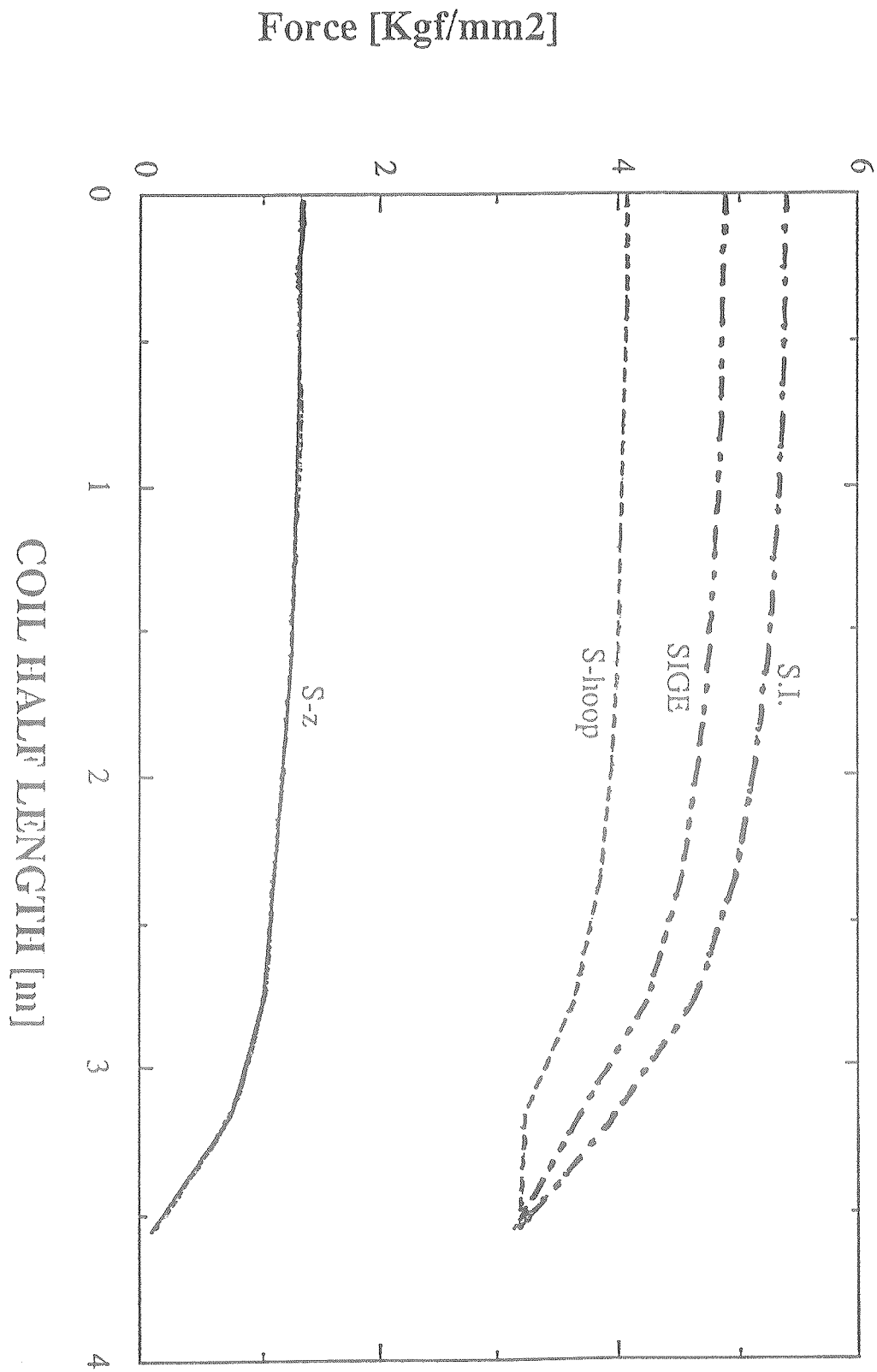
Force [Kgf/mm2]
6
4
2
0
S.I.
SIGE
S-loop
S-z
0
1
2
3
4
COIL HALF LENGTH [m]

Date: February 17 and 18, 1992
Place: KEK Main Building meeting room (1st floor, next to Library)

Participants: (to be)
Robert Kephart and Charles Grozis (FNAL)
Taka Kondou, Yoshikuni Doi, Yasuhiro Makida, Hiroshi Yamaoka
Nobuhiro Kimura, Ken-ichi Tanaka and Akira Yamamoto (KEK)
Susumu Mine, Hiroshi Mukai (Toshiba)
Hideo Kakui and Isamu Oono (IHI)

Agenda:

Feb. 17,

11:00 Opening address ..... T. Kondou / A. Yamamoto

11:10 General progress at Fermilab..... R. Kephart

11:20 General progress at KEK ..... A. Yamamoto

11:30 Changing of magnet length and its effect.....Kephart / Yamamoto

11:45 Magnetic force calculation ..... K. Tanaka
R. Kephart / R. Wands

12:15 Lunch break

13:15 Vacuum vessel
Isogrid option .....C, Grozis
Honeycomb option.....H. Yamaoka / I. Oono
Discussion on prototype .. ..all

14:30 Coil and Magnet Supporting:
FNAL option.....C. Grozis
KEK option.....Y. Makida / S.Mukai
Discussion .....all

15:15 Stability and quench analysis,.....Y. Makida

15:45 Chimney design ....A. Yamamoto / C. Grozis

16:15 Cryogenics Scheme.....Y. Doi / A. Yamamoto

16:30 Magnet Installation into the Detecto.....A. Yamamoto

16:45 Summary ..... T. Kondou / A. Yamamoto

17:00 Adjorn

Feb. 18,

---- Fermilab - KEK meeting ------

9:15 Discussions for further work

SDC

Principle activities @ FNAL

1) IVC (ISOGRID VACUUM SHELL)

2) Magnetic modeling (ANSYS)

   a) Coil simulation (B/H, decentering forces slot geometry, length effects, excitation curves, $\int B \cdot dl$ v g etc

   b) Calorimeter interface (attach points, supports, location of chimney, cable access, etc)

3) INTEGRATION (eg muons) (SAFETY)

4) CRYOGENICS

   a) Refrigerator SPEC's

   b) cryo plant + Transfer line layouts

   c) Flow schematics

Other activities

6) (ANSYS) QUENCH SIMULATION

7) PS + Controls

8) Flow/Pressure drop calculations

Protoszek 9/7/92

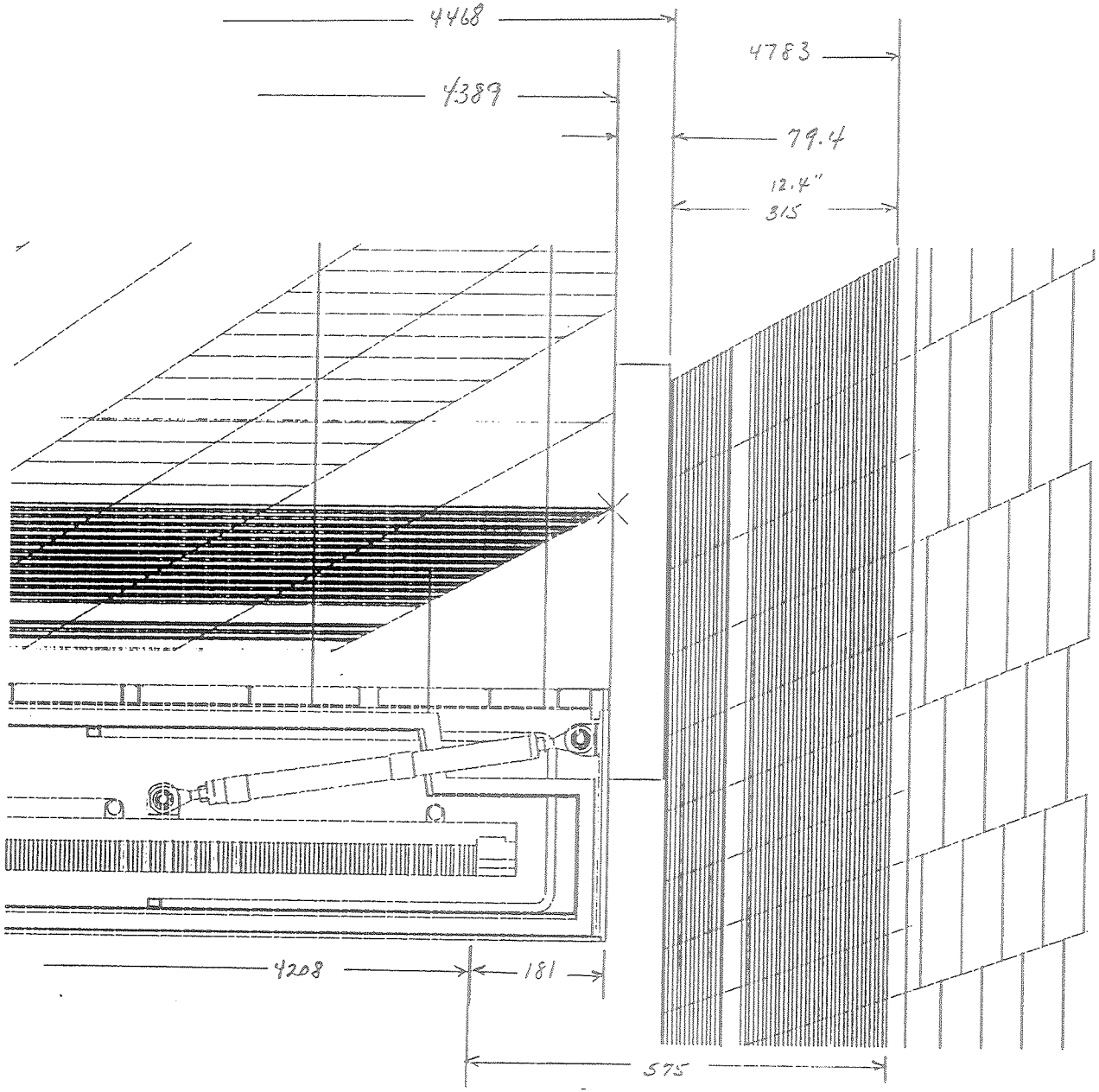

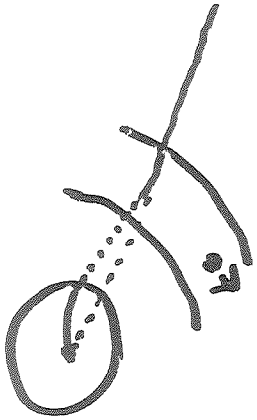

2/7/92 B. Wands

Results from Ferm. Analysis
w/real iron, and air gaps

- Coil length (for $\Delta Z = 0.46$) = 4.3 m half/length
- Coil inner radius = 1.80 m
- Coil outer radius = 1.82 m
- ΔZ was obtained by leaving iron geometry stationary and changing coil length.
- B-H curve from CDF measured values
- model contains ~19 K nodes and elements

Results

ΔZ (m)	F (tonnes)	$2dF/dZ$ (tonnes/cm)
0.0	342	56
0.10	567	44
0.20	778	35
0.30	936	27
0.46	1126	20
0.80	1357	7

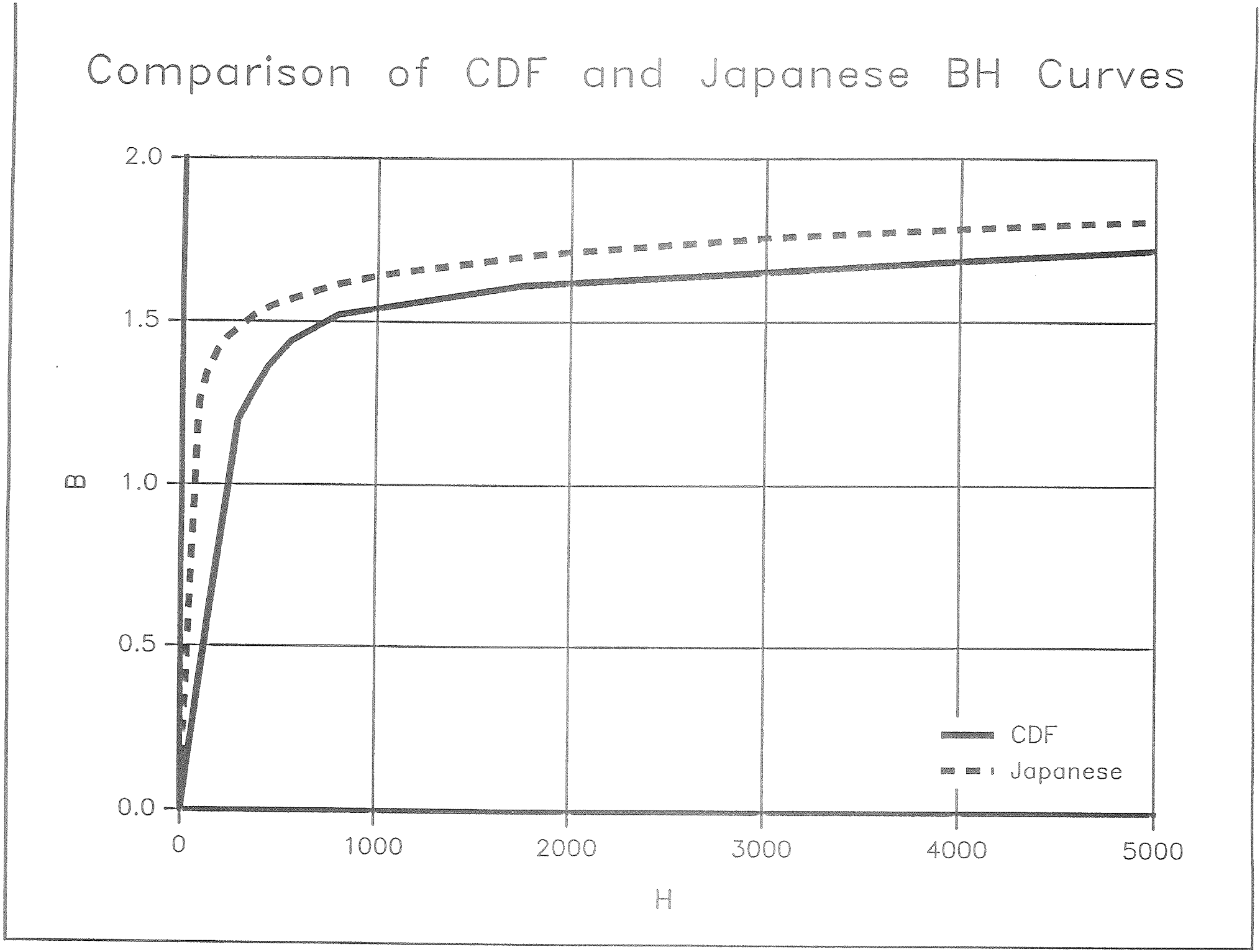
Comparison of CDF and Japanese BH Curves
2.0
1.5
1.0
0.5
0.0
B
0
1000
2000
3000
4000
5000
H
CDF
Japanese

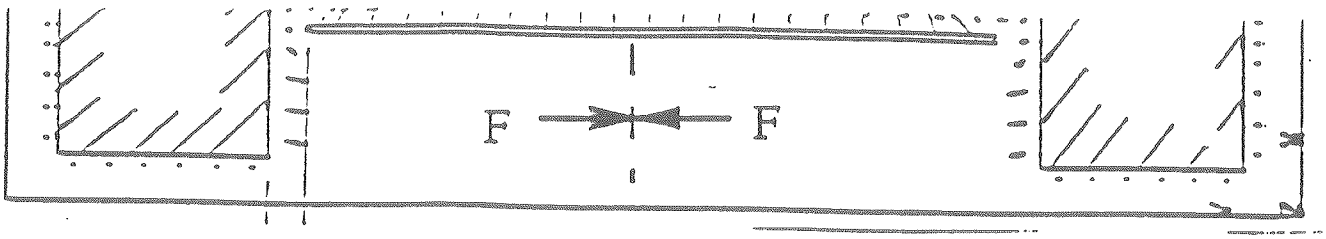
F
F

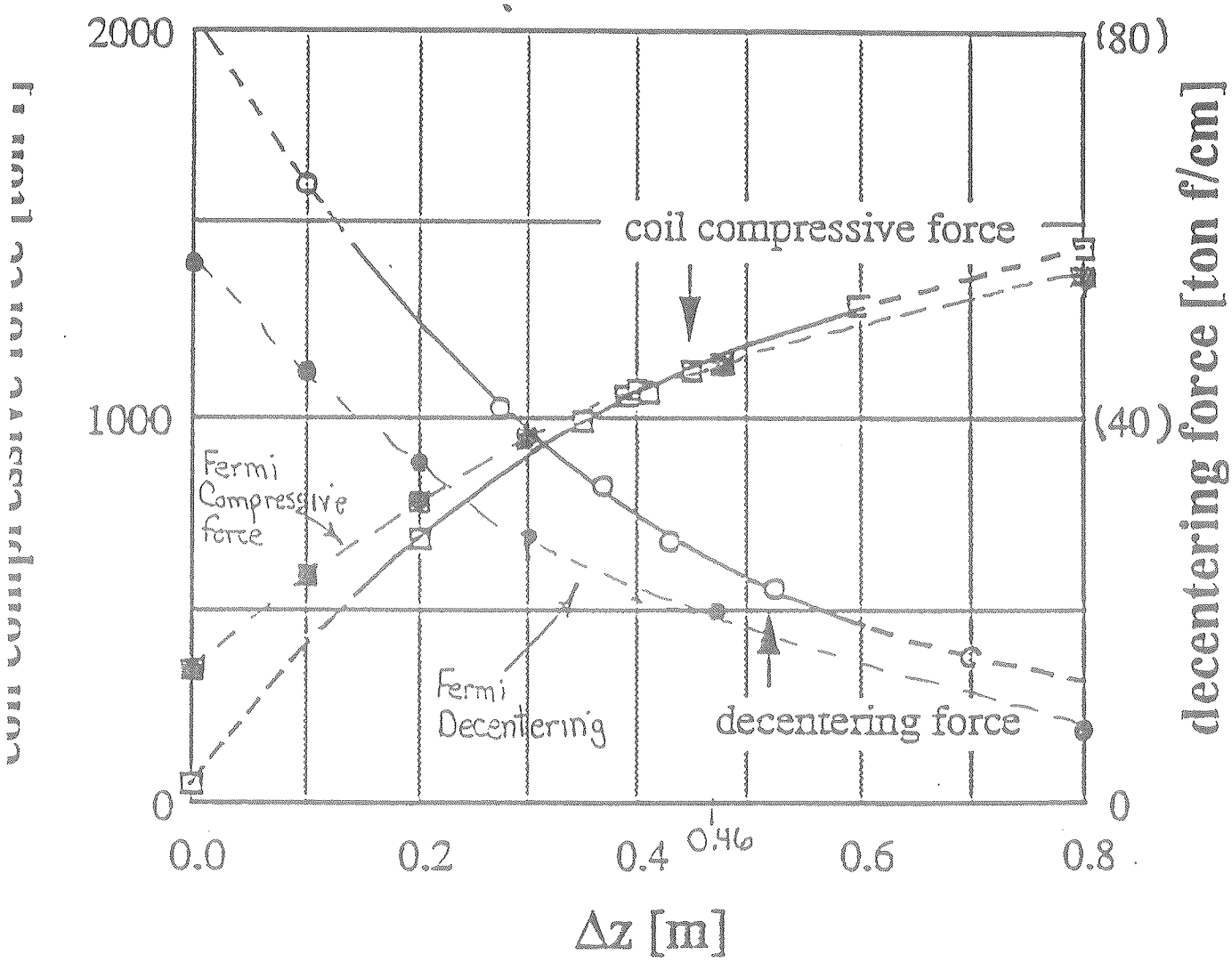
2000
1000
0
(80)
(40)
0
coil compressive force
Fermi Compressive force
Fermi Decentering
decentering force
0.0
0.2
0.4
0.46
0.6
0.8
Δz [m]
decentering force [ton f/cm]

Fig. 1 (fba)

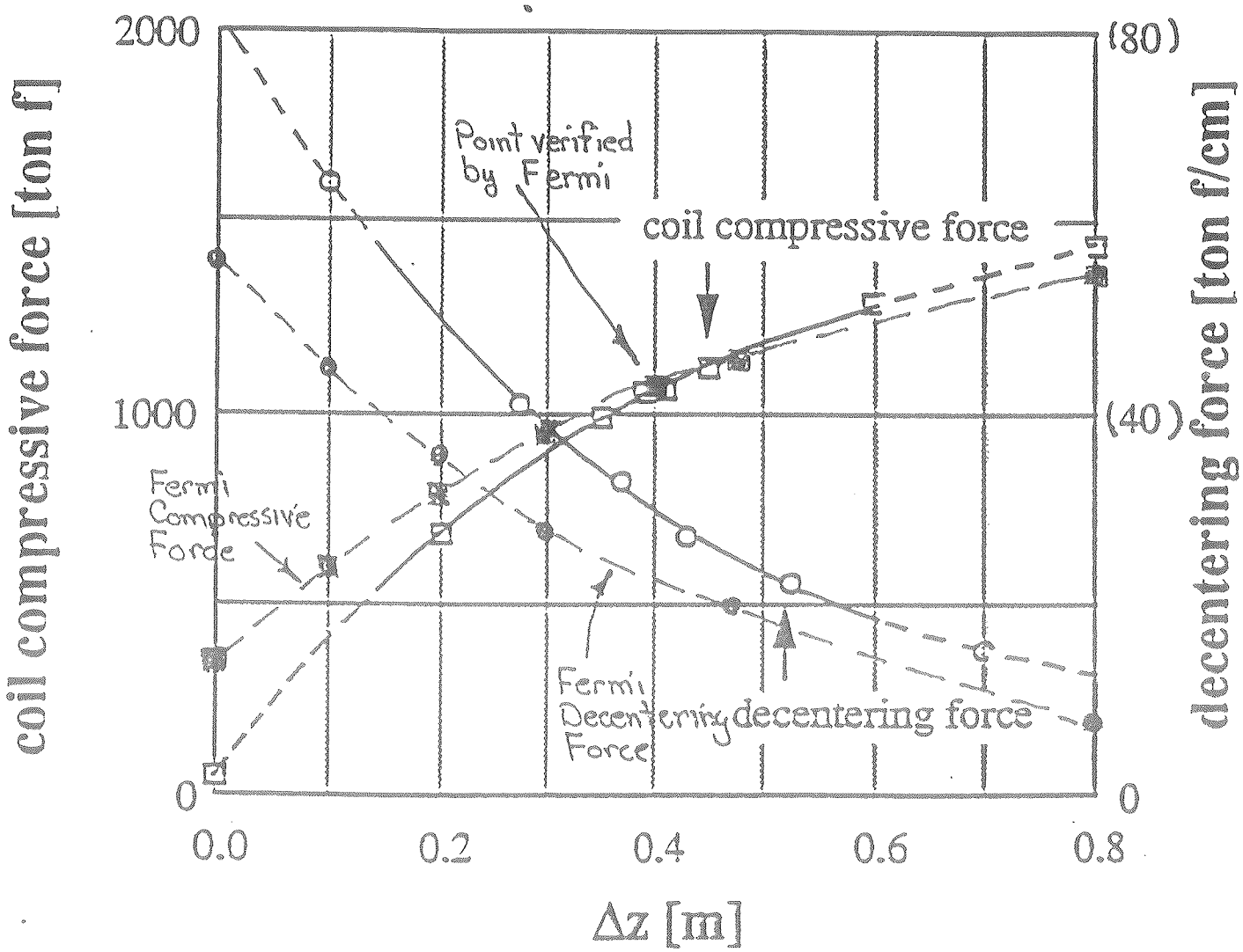
2000
1000
0
(80)
(40)
0
0.0
0.2
0.4
0.6
0.8
coil compressive force [ton f]
decentering force [ton f/cm]
Δz [m]
Point verified by Fermi
coil compressive force
Fermi Compressive Force
Fermi Decentering Force
decentering force

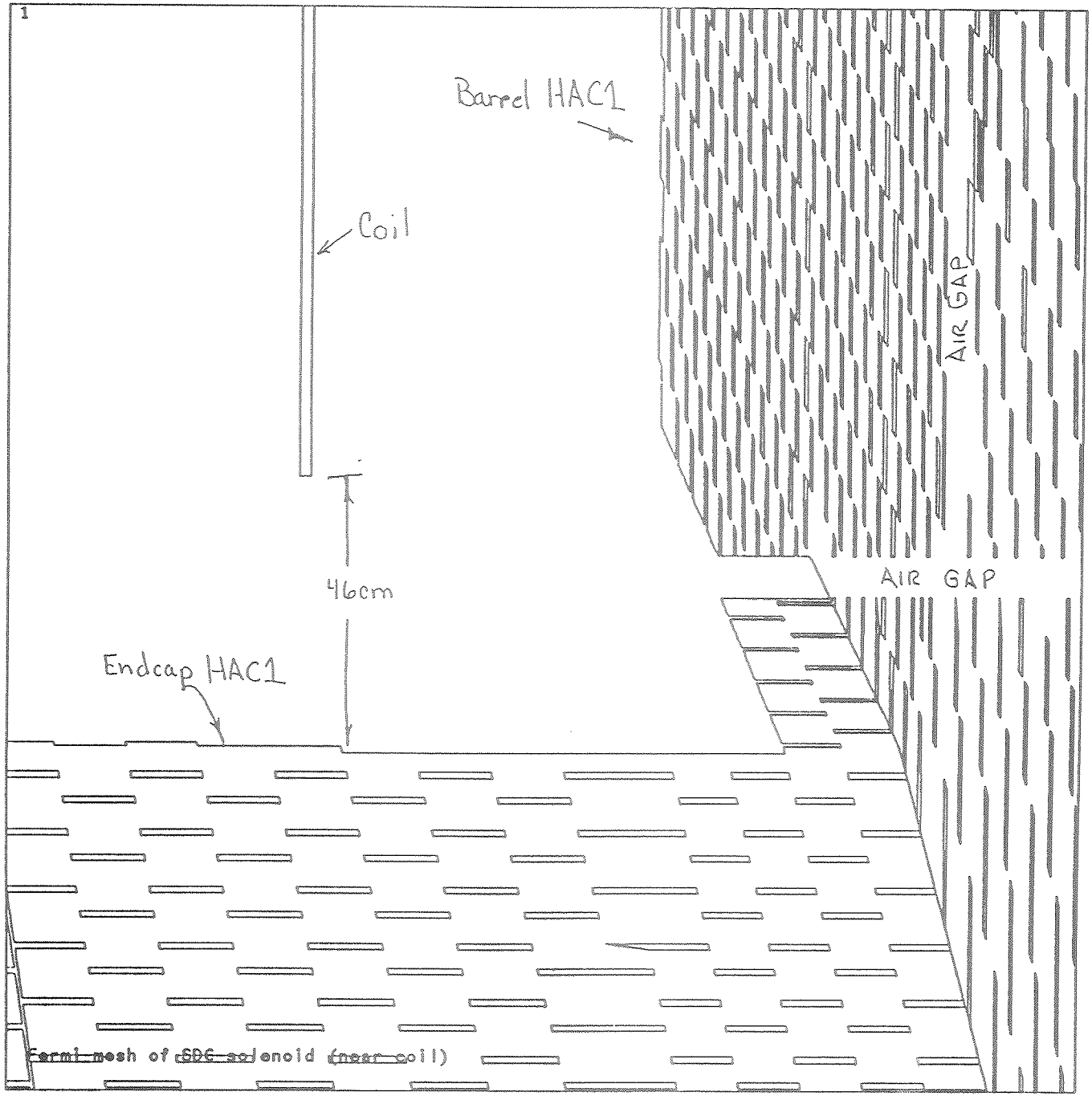

ANSYS 4.4A
FEB 7 1992
11:03:41
PLOT NO. 1
PREP7 ELEMENTS
TYPE NUM

ZV =1
*DIST=0.939652
*XF =2.227
*YF =-4.449
EDGE

Bob WANDS

Air elements removed for clarity

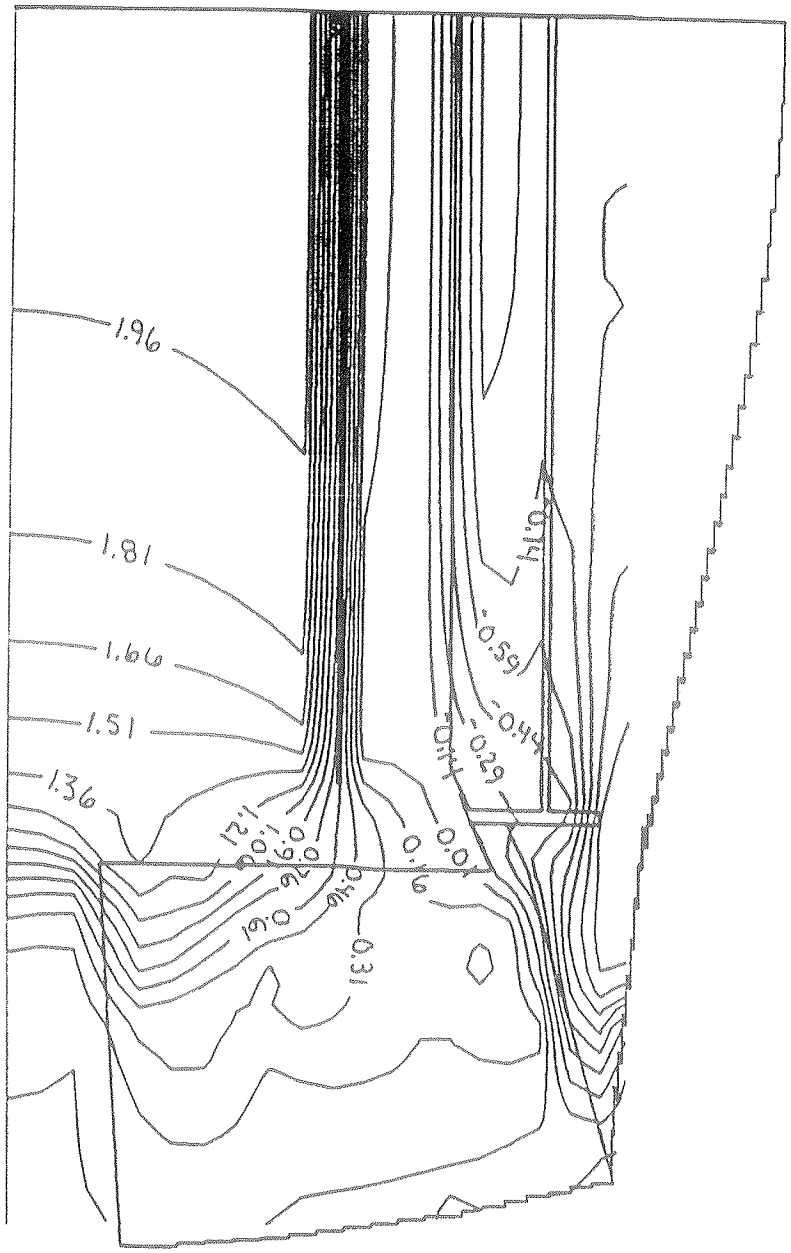
1.96
1.81
1.66
1.51
1.36
1.21
1.06
0.91
0.76
0.61
0.46
0.31
0.16
0.01
-0.14
-0.29
-0.44
-0.59

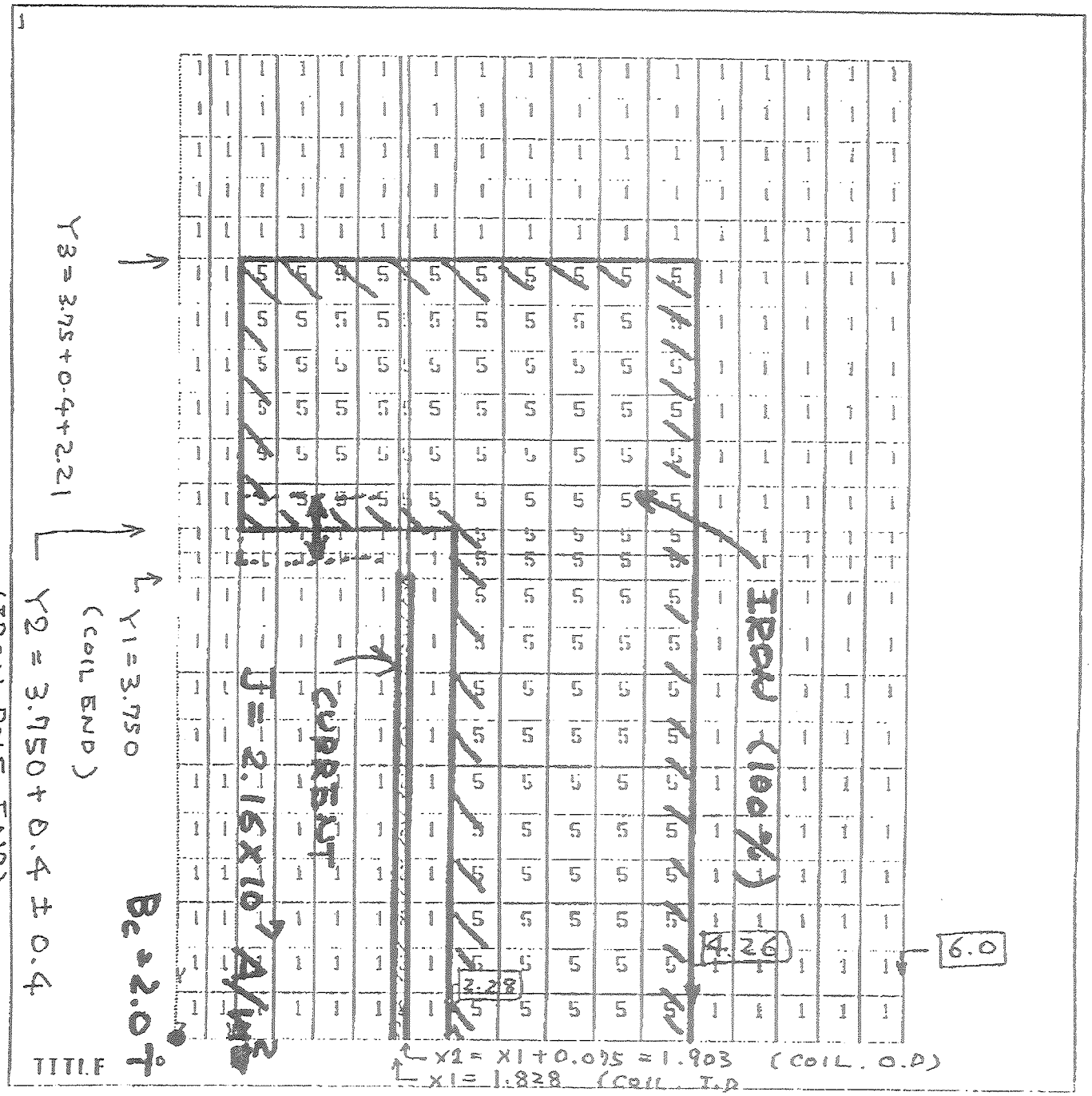

ANSYS 4.4A
DEC 3 1991
22:01:06
PREP7 ELEMENTS
MAT NUM

ZV =1
DIST=4.4
XF =3
YF =4

7

Date: February 17 and 18, 1992
Place: KEK Main Building meeting room (1st floor, next to Library)

Participants: (to be)
Robert Kephart and Charles Grozis (FNAL)
Taka Kondou, Yoshikuni Doi, Yasuhiro Makida, Hiroshi Yamaoka
Nobuhiro Kimura, Ken-ichi Tanaka and Akira Yamamoto (KEK)
Susumu Mine, Hiroshi Mukai (Toshiba)
Hideo Kakui and Isamu Oono (IHI)

Agenda:

Feb. 17,

11:00 Opening address ..... T. Kondou / A. Yamamoto

11:10 General progress at Fermilab..... R. Kephart

11:20 General progress at KEK ..... A. Yamamoto

11:30 Changing of magnet length and its effect.....Kephart / Yamamoto

11:45 Magnetic force calculation ..... K. Tanaka
R. Kephart / R. Wands

12:15 Lunch break

13:15 Vacuum vessel
Isogrid option ..... C. Grozis
Honeycomb option.....H. Yamaoka / I. Oono
Discussion on prototype .. ..all

14:30 Coil and Magnet Supporting:
FNAL option.....C. Grozis
KEK option.....Y. Makida / S.Mukai
Discussion .....all

15:15 Stability and quench analysis,.....Y. Makida

15:45 Chimney design ....A. Yamamoto / C. Grozis

16:15 Cryogenics Scheme.....Y. Doi / A. Yamamoto

16:30 Magnet Installation into the Detecto.....A. Yamamoto

16:45 Summary ..... T. Kondou / A. Yamamoto

17:00 Adjorn

Feb. 18,

---- Fermilab - KEK meeting ------

9:15 Discussions for further work

PS ASSOCIATES, INC.

5755 Oberlin Drive, Suite 300, San Diego, CA 92121
TEL (619) 453-3810 FAX (619) 453-9744

February 2, 1992

FAX MESSAGE for Chuck Grozis: 15 pages including this page.

To: Chuck Grozis

From: Paul Slysh

Subject: SDC Vacuum Structure

The following are summaries of significant design and performance data from the attached SST ISO for selected Aluminum 5083-T0 and 2219-T851 isogrid structures with skins on OD.

		Aluminum	
		5083-T0	2219-T851
E	Young's Modulus, psi	1.04×10^7	1.08×10^7
Rh	Density, lbs./in.^{3}	.096	.102
Fy	Yield Strength, psi	17,000	48,000
Fu	Ultimate Strength, psi	39,000	62,000
Mg	Margin for General Instability	.08	.01
Mp(2)	Ultimate Strength Margin (For Uf, Ultimate Factor = 4)	.009	1.125
A	Node spacing, in.	7.0377	7.0377
Tb	Weight Equivalent Thickness, in. (At half tolerance conditions.)	.4195	.3771

Plots of rib cross sections and local flat patterns are shown on pages 6, 7 and 13.

Tb for 5083-T0 is 11.24% greater than Tb for 2219-T851.

The location of the forming centroidal plane was taken to be .592 in. from the skin for both structures. Forming analyses have not yet been performed to fine tune the .592 in. dimension.

Current estimates:	Outside Radius	81.102 in.
	Inside Radius	78.902 in.
	Forming Radius	80.510 in.

For the applied external pressure of 30 psi the internal line loads are 173 lbs./in. in axial compression and 2415 lbs./in. in hoop compression.

Margins Mg and Mp(2) are positive as required by empirical and ASME code analyses.

Conclusions:

5083-T0 Aluminum is an acceptable substitute for 2219-T851 Aluminum based on the results of the above analyses.

The 5083-T0 manufacturability and corrosion resistant properties in MIL. HDB. 5 are acceptable for this application.

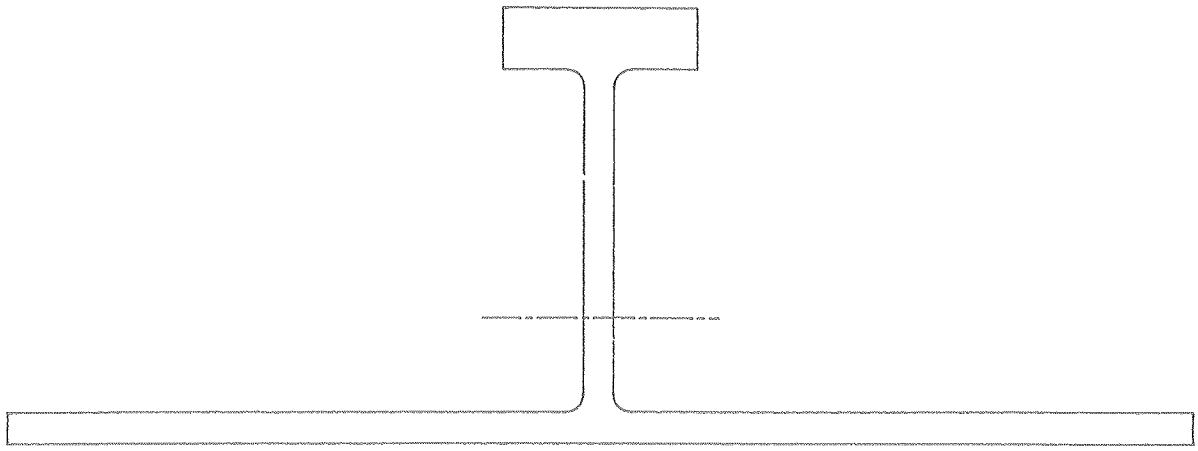

SST ISO - SHELL STRUCTURE ANALYSIS

FERMIA CONVENTIONAL ISOGRID ANALYSIS 1 Feb 1992

SDC Vacuum Structure

SECTION: 1 ELEMENT: 1 ANGLE: 5 DEG

ALUM 5083-T0 MACHINED/CAST FLANGED CROSS SECT.

PLOT SCALE: .91 ENGLISH UNITS

T SKIN THICKNESS ----------	.16
W PLATE THICKNESS ----------	2.2
B RIB WIDTH ----------	1
B2 WEB WIDTH ----------	.15
C FLANGE THICKNESS, OUTER ----------	.31
T2 FLANGE THICKNESS, AT SKIN -------	.16
SKIN FLANGE STEP ----------	0
R FILLET RADIUS FLANGE ----------	.09
R0 FILLET RADIUS SKIN ----------	.09
R1 CORNER RADII, FLANGE ----------	.313
R2 CORNER RADII, WEB ----------	.738
MAXIMUM SKIN WIDTH ----------	6.09472
EFFECTIVE SKIN WIDTH ----------	6.09472
I MOMENT OF INERTIA (X) ----------	1.031
At TOTAL RIB CROSS SECTION AREA ---	1.5516
Ar RIB CROSS SECTION AREA LESS SKIN	.57645
X CENTROIDAL AXIS REL. FLANGE OD --	1.5651
K NUMBER OF EFFECTIVE SKINS --------	19.046
Kx MAX. NUMBER OF EFFECTIVE SKINS -	19.046
Tb (1) WEIGHT EFFECTIVE THICKNESS -	.41949

ISOGRID
(Key Points)

* A lattice of intersecting ribs forming an array of equilateral triangles.

* Characteristics

  - Isotropic (no directions of instability or weakness)
  - Poisson's ratio = 1/3
  - Efficient in compression and bending

* Advantages:

  - Easily analyzed
  - Can be optimized for wide range of loading intensities
  - Standard pattern for attachment (nodes accommodate equipment mounting without change)
  - Readily reinforced for concentrated loads and cutouts
  - Redundant load paths
  - Less structural depth

* In use on major space programs, and extensively investigated and tested on space shuttle study effort, used in industry

February 7, 1992
C. Grozis

Accomplishments to Date Isogrid Prototype Shell

1) Fermilab has received structural analysis and engineering for the prototype Isogrid shell from P.S. Associates.

2) Companies that have expertise in Isogrid construction have been contacted for the possibility of prototype work and development, i.e. machining, forming, welding.

3) Two Isogrid plates ~45"(1143mm) x 25" (635mm) (material 2219-T351) with full size pockets have been machined at Fermilab.

4) Welding samples of panel to panel joints have been made using 2219-T351 material and T.I.G. welded using 2319 filler rod, 2 samples have been welded with no detectable vacuum leaks.

5) Two Isogrid test plates have been brake formed (successfully).

6) Design/drafting work continues on the prototype shell.

February 7, 1992
C. Grozis

Isogrid Near Future Plans

1) We will machine another test panel ~60" (1524mm) x ~30" (762mm) (material to be 5083-H321). This panel will have the exact circumferen-tial and longitudinal weld joint config-urations as the prototype shell panels.

2) The test panel will then be formed to the 81.102 R (2060 mm).

3) More weld joint tests will be performed using 5083-H321 material.

4) The material for the prototype (probably 5083 aluminum) will be ordered from the mill.

5) When all dimensions are finalized and agreed to, we will send out a bid package to vendors for the prototype plate machining.

Design Standards
Isogrid Shell

* Cylinder to have a design collapse pressure of at least 30 psid - external

* Cylinder to have a safety factor of at least two on Euler buckling caused by the axial load.

* Allowable stress that is permitted by Section VIII, Division 1 of the ASME Pressure Vessel Code for the aluminum alloy used.

SDRC I-DEAS VI: Solid_Modeling 14-NOV-91 11:59:3

Database: isogrid tank
View : No stored View
Task: Assembly
System: 3-RING1 (modified)

Units :
Display : No stored Opt
Bin: 1-MAIN
Update Level: Full

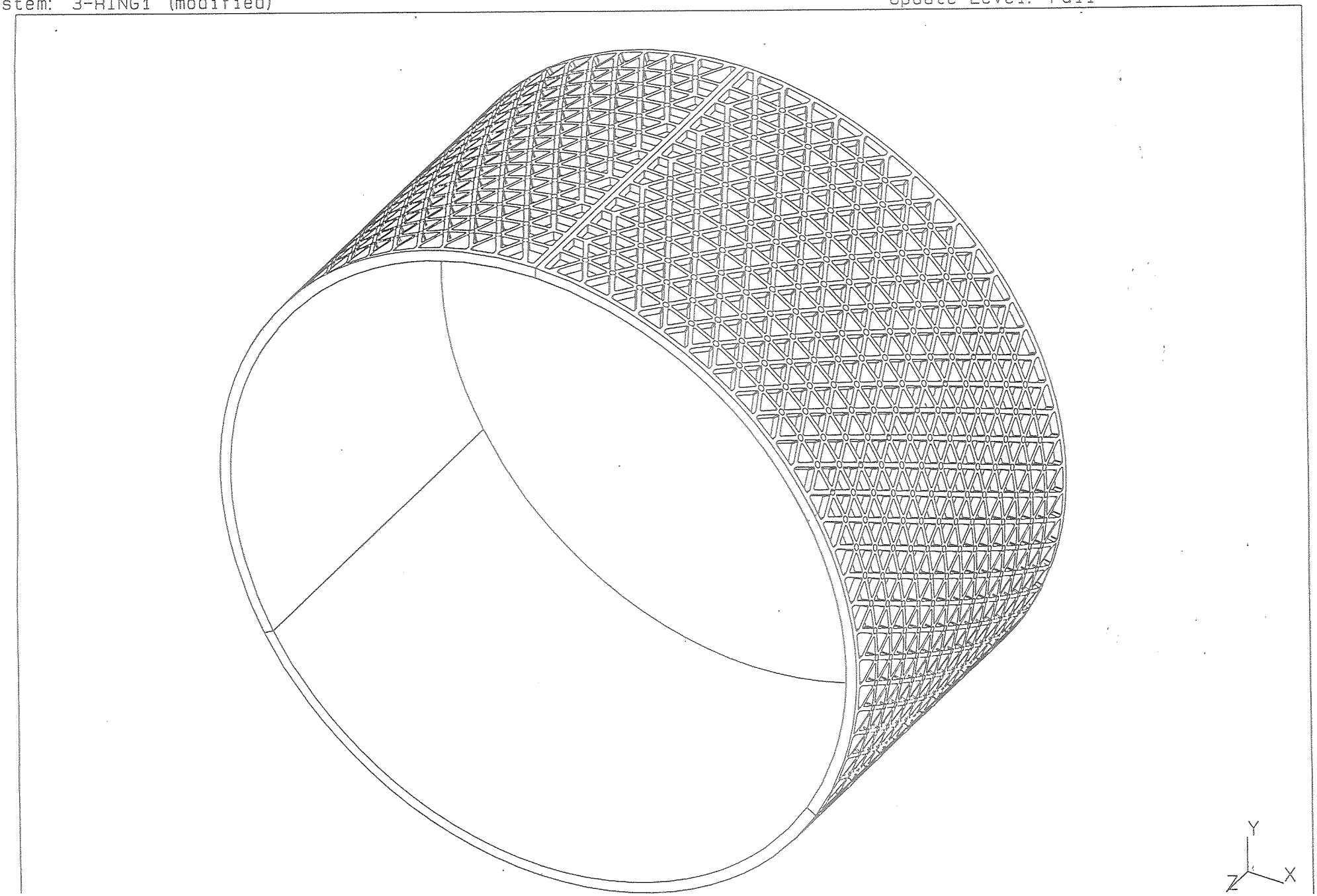

REV.	DESCRIPTION	DRAWN	DATE
		APPROVED	DATE

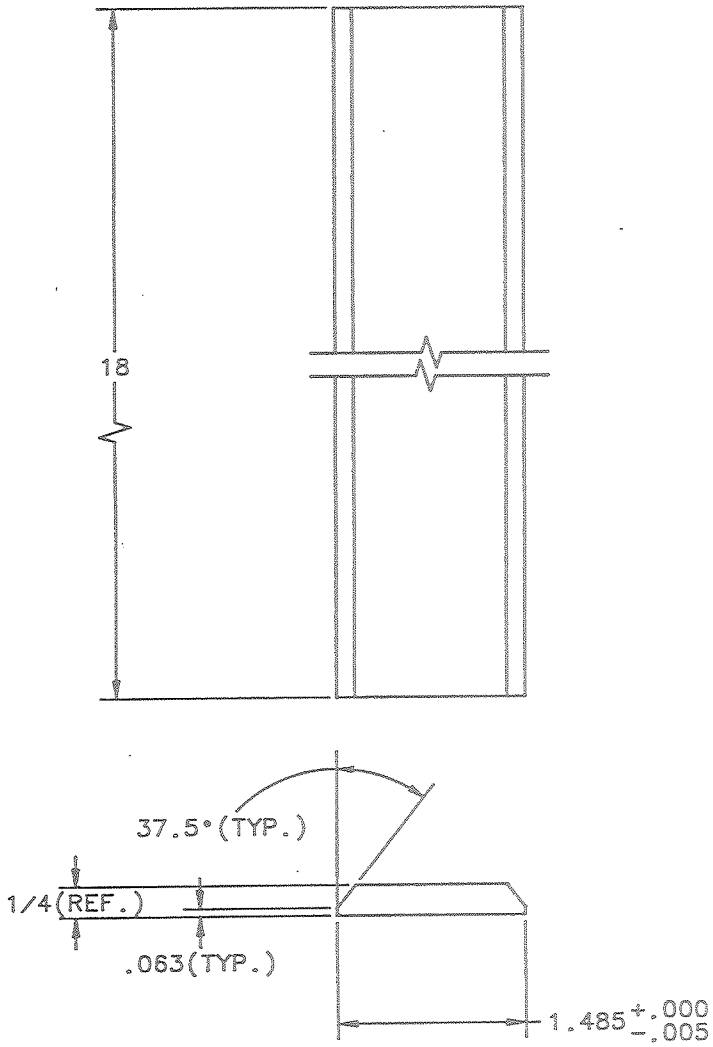

ITEM NO.	PART NO.	DESCRIPTION OR SIZE	QTY. REQ.

PARTS LIST

UNLESS OTHERWISE SPECIFIED			ORIGINATOR	GROZIS/FRIEND	11/91
FRACTIONS	DECIMALS	ANGLES	DRAWN	D. FRIEND	11/5/91
± 1/64	± .005	± .5°	CHECKED		11-7-91
			APPROVED		11-8-91

1. BREAK ALL SHARP EDGES 1/64 MAX.
2. DO NOT SCALE DRWG.
3. DIMENSIONING IN ACCORD WITH ANSI Y14.5 STD's.

125 MAX. ALL MACHINED SURFACES

USED ON
SSC-SDD-000057

MATERIAL
RECTANGLE 1/4" x 1 1/2"
ALUM. 6061-T6, STOCK #1510-1660

B

FERMI NATIONAL ACCELERATOR LABORATORY
UNITED STATES DEPARTMENT OF ENERGY

SOLENOIDAL DETECTOR COLLABORATION
SUPERCONDUCTING SOLENOID
ISOGRID TEST WELD BAR

SCALE	DRAWING NUMBER	SHEET NO.	REV.
FULL	SSC-SDD-000056	1	

REV.	DESCRIPTION	DRAWN	DATE
		APPROVED	DATE

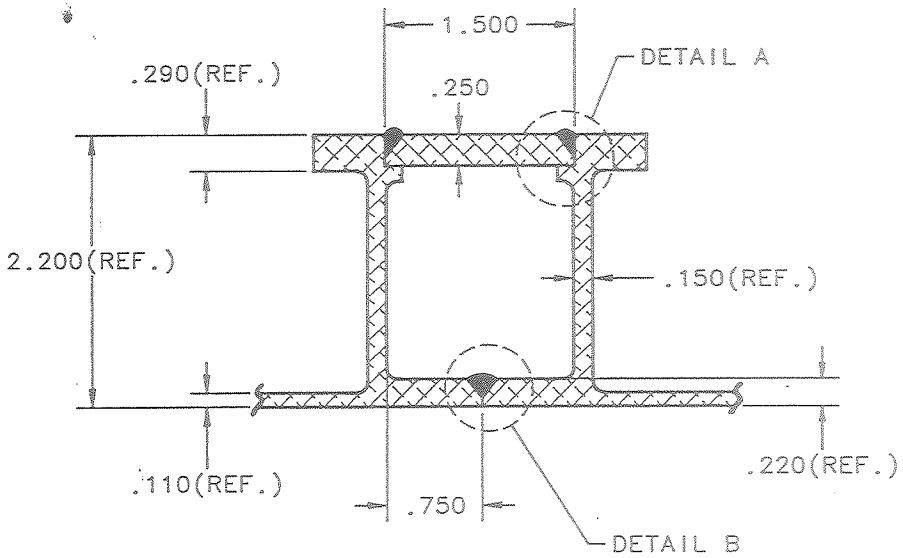

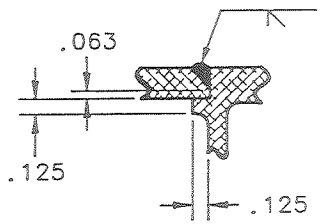

DETAIL "A"

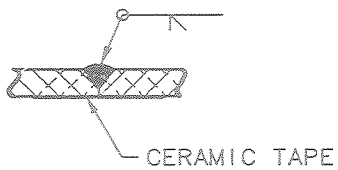

DETAIL "B"

ITEM NO.	PART NO.	DESCRIPTION OR SIZE	QTY. REQ.

PARTS LIST

UNLESS OTHERWISE SPECIFIED			ORIGINATOR	C. GROZIS	10/91
FRACTIONS	DECIMALS	ANGLES	DRAWN	D. FRIEND	11/1/91
±	±	±	CHECKED		
1. BREAK ALL SHARP EDGES 1/64 MAX. 2. DO NOT SCALE DRWG. 3. DIMENSIONING IN ACCORD WITH ANSI Y14.5 STD's.			APPROVED		
			USED ON		
√ MAX. ALL MACHINED SURFACES			MATERIAL		B

FERMI NATIONAL ACCELERATOR LABORATORY
UNITED STATES DEPARTMENT OF ENERGY

SOLENOIDAL DETECTOR SOLENOID SUPERCONDUCTING SOLENOID ISOGRID PANEL WELD DETAIL

SCALE	DRAWING NUMBER	SHEET NO.	REV.
FULL		1	

REV.	DESCRIPTION	DRAWN	DATE
		APPROVED	DATE

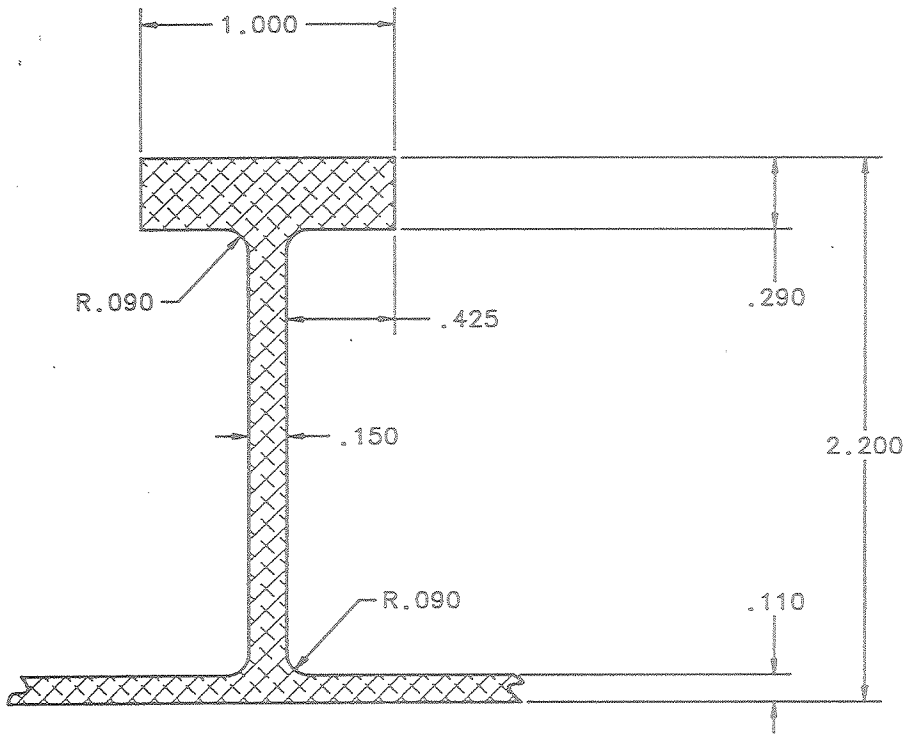

NOTES:

1. NODE SPACING IS 6.9930 INCHES.
2. EFFECTIVE THICKNESS IS 0.3874 INCHES.

ITEM NO.	PART NO.	DESCRIPTION OR SIZE	QTY. REQ.

PARTS LIST

UNLESS OTHERWISE SPECIFIED			ORIGINATOR	C. GROZIS	8/91
FRACTIONS	DECIMALS	ANGLES	DRAWN	D. FRIEND	8/14/91
± 1/64	±.005	± 1°	CHECKED		
1. BREAK ALL SHARP EDGES 1/64 MAX. 2. DO NOT SCALE DRWG. 3. DIMENSIONING IN ACCORD WITH ANSI Y14.5 STD'S.			APPROVED		
			USED ON		
125 √ MAX. ALL MACHINED SURFACES			MATERIAL ALUMINUM 2219-T851		B

FERMI NATIONAL ACCELERATOR LABORATORY
UNITED STATES DEPARTMENT OF ENERGY

SOLENOIDAL DETECTOR COLLABORATION
SUPERCONDUCTING SOLENOID
ISOGRID CROSS SECTION

SCALE	DRAWING NUMBER	SHEET NO.	REV.
2 : 1		1	

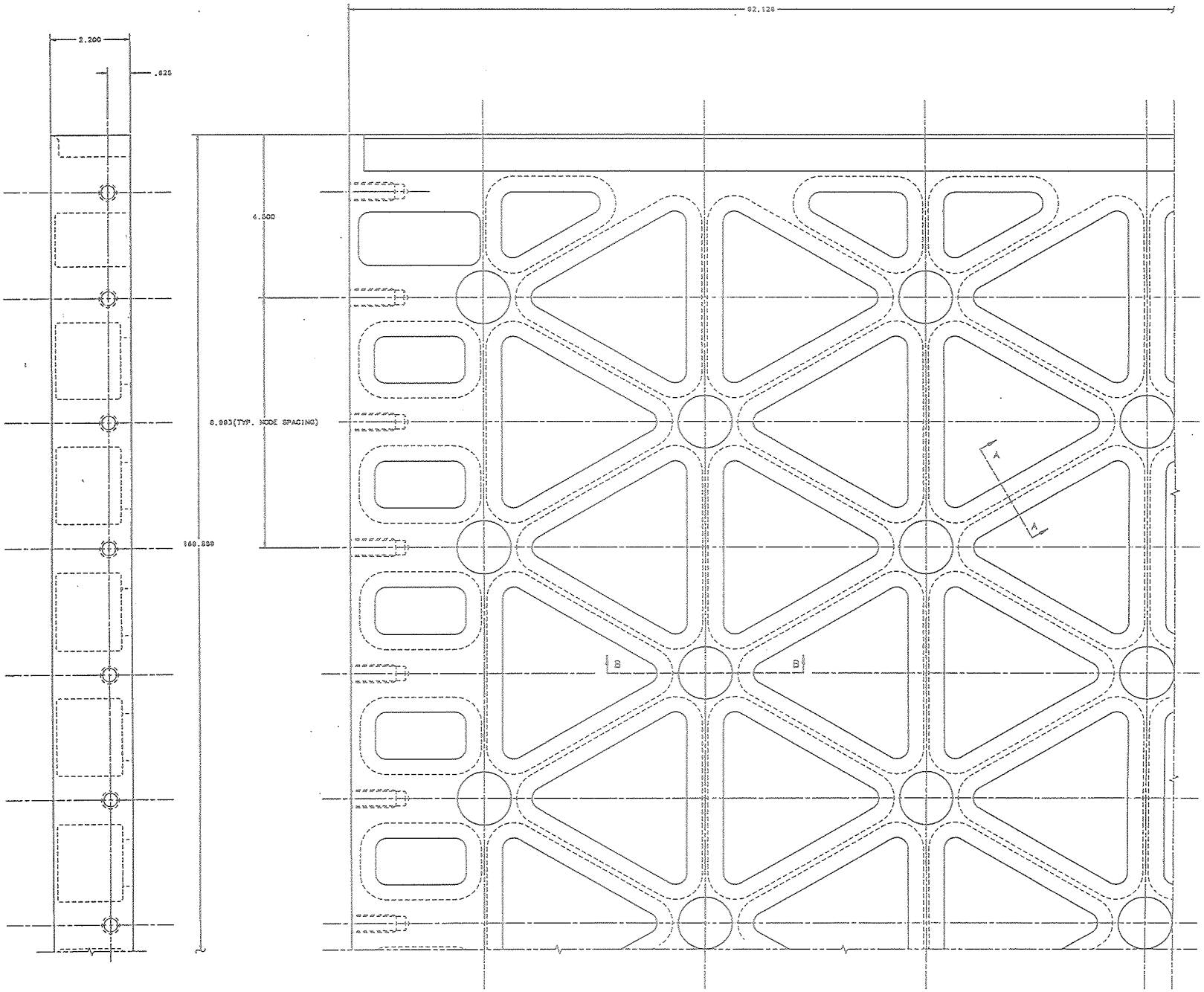

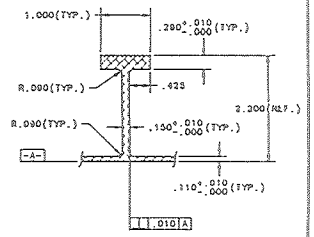

SECTION A-A

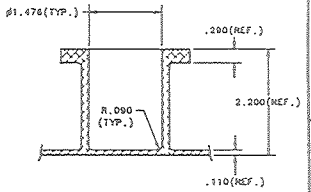

SECTION B-B

ITEM NO.	PART NO.	DESCRIPTION OR SIZE	QTY. REQ.

PARTS LIST

UNLESS OTHERWISE SPECIFIED		ORIGINATOR	C. GROZIS	11/91
FRACTIONS	DECIMALS	ANGLES	DRAWN	D. FRIEND	12/30/91
2	2	2	CHECKED		
1. BREAK ALL SHARP EDGES 1/64 MAX. 2. DO NOT SCALE DRWG. 3. DIMENSIONING IN ACCORD DITS ANSI Y14.5 STD'S.			APPROVED		
			USED ON		
√ TOLS. ALL MACHINED SURFACES			MATERIAL		E

FERMI NATIONAL ACCELERATOR LABORATORY
UNITED STATES DEPARTMENT OF ENERGY

SOLENOIDAL DETECTOR COLLABORATION
SUPERCONDUCTING SOLENOID
ISOGRID CORNER DETAIL; 6.993 N.S.

SCALE	DRAWING NUMBER	SHEET NO.	REV.
FULL		1	

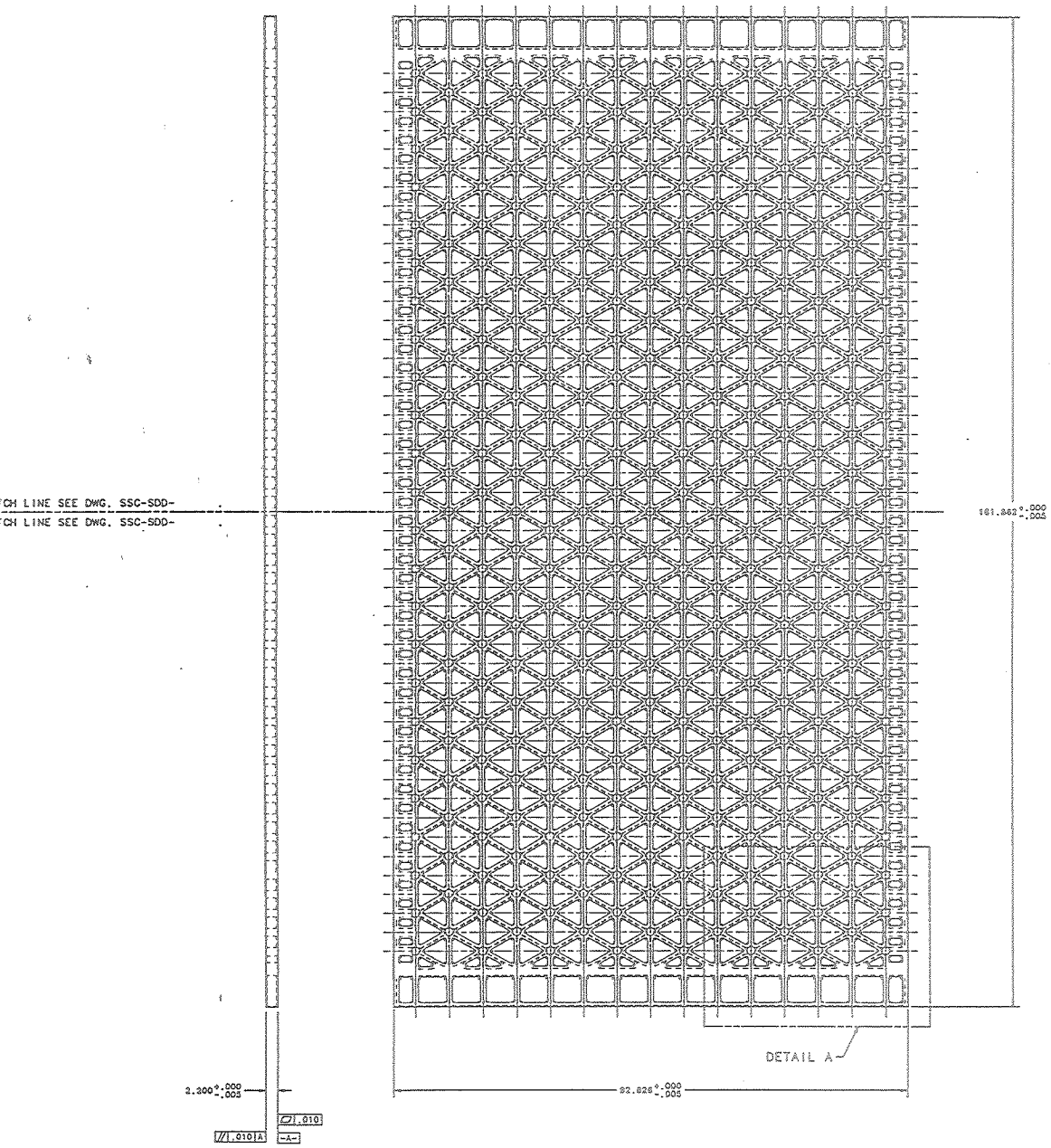

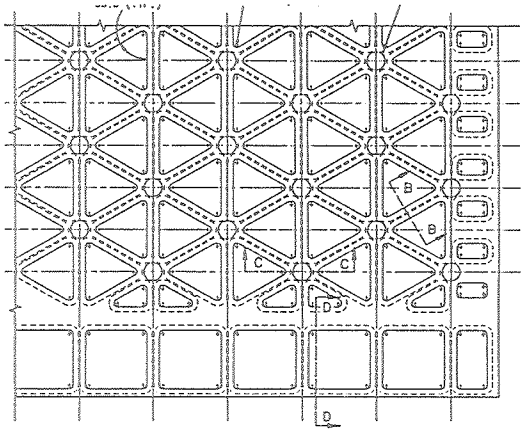

DETAIL "A"
SCALE: 1:4

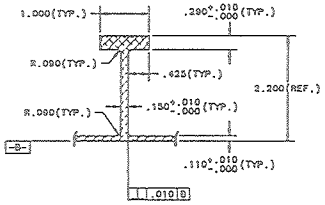

SECTION B-B
SCALE: 1:1
(ROTATED 90°)

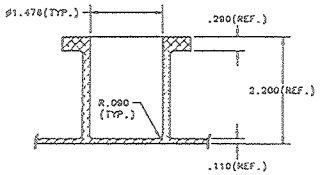

SECTION C-C
SCALE: 1: 1

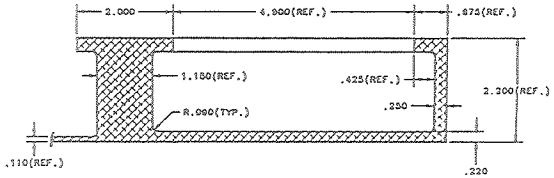

SECTION D-D
SCALE: 1: 1

ITEM NO.	PART NO.	DESCRIPTION OR SIZE	QTY. REQ
		PARTS LIST	

UNLESS OTHERWISE SPECIFIED		ORIGINATOR	FRIEDO/GROZIS 12/01
FRACTIONS	DECIMALS	ANGLES	DRAWN D. FRIEDO 1/7/02
± 1/64	± .005	± 1°	CHECKED
1. BREAK ALL SHARP EDGES .1/64 R.			APPROVED
2. DO NOT SCALE DRAWING. DIMENSIONS TO AGREE WITH SHOP STAND.			USED ON
125 RMS. ALL MACHINED SURFACES			MATERIAL E

FERMI NATIONAL ACCELERATOR LABORATORY
UNITED STATES DEPARTMENT OF ENERGY

SOLENOIDAL DETECTOR COLLABORATION
SUPERCONDUCTING SOLENOID
ISOGRID HALF PANEL #1; STANDARD PANEL

SCALE	DRAWING NUMBER	SHEET NO.	REV.
1 : 8	SSC-SDD-	1	

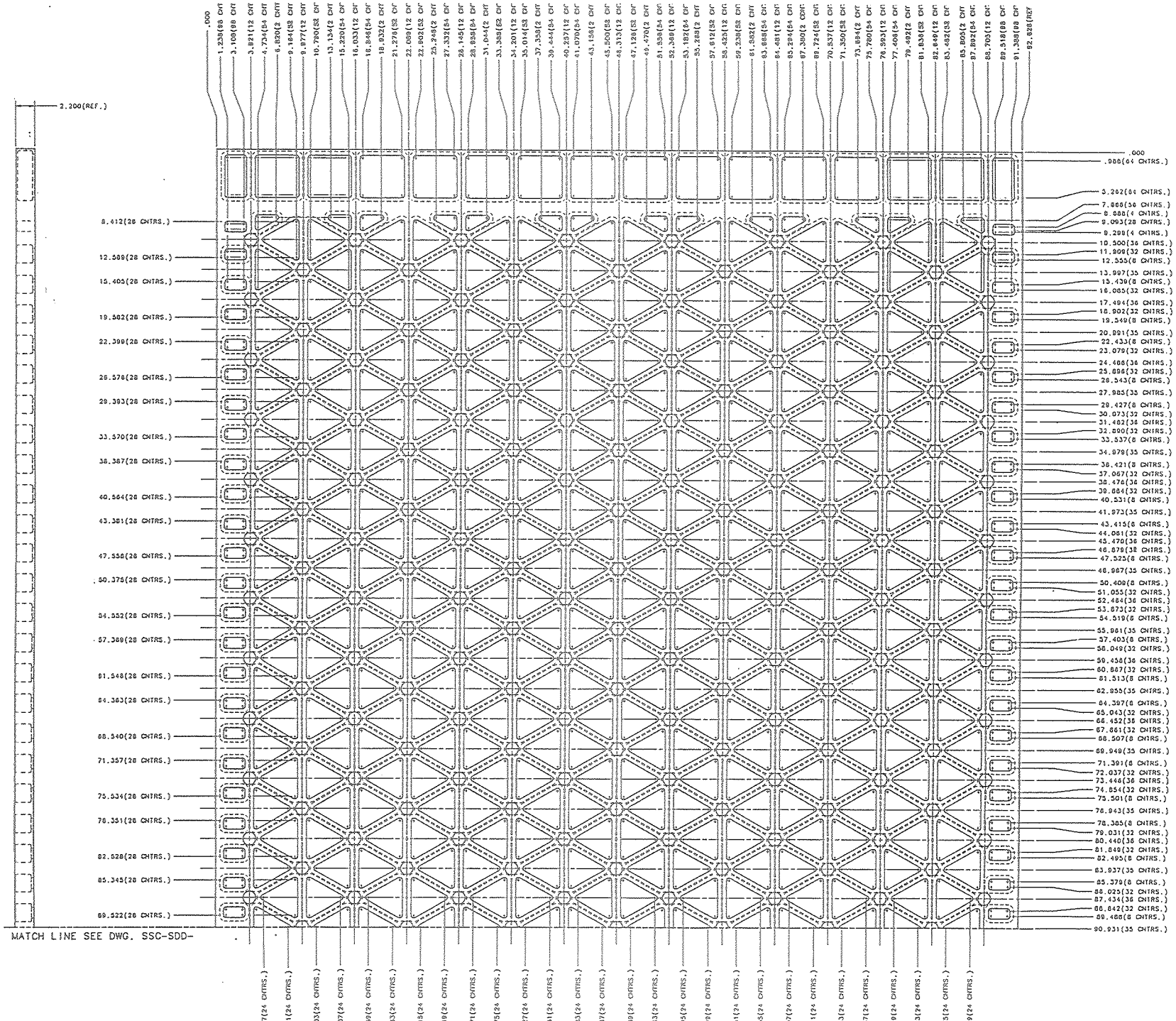

NOTES:

1. ALL DIMENSIONS, UNLESS OTHERWISE SPECIFIED SHALL HAVE A TOLERANCE OF +.000 and -.005.

ITEM NO.	PART NO.	DESCRIPTION OR SIZE	QTY. REQ.
PARTS LIST			

UNLESS OTHERWISE SPECIFIED		DESIGNATOR	FRIEND/GROZIS 12/91
FRACTIONS	DECIMALS	ANGLES	DRAWN D. FRIEND 1/6/92
± 1/64	± .005	± 1°	CHECKED
1. BREAK ALL SHARP EDGES 1/64 MAX. 2. DO NOT SCALE DWG. 3. DIMENSIONS-DEVIATE IN ACCORD WITH SMD TITLE 859-1.			APPROVED
			USED ON
√ SURF. FOR MACHINED SEAL AREA			MATERIAL E

FERMI NATIONAL ACCELERATOR LABORATORY
UNITED STATES DEPARTMENT OF ENERGY

SOLENOIDAL DETECTOR COLLABORATION
SUPERCONDUCTING SOLENOID
ISOGRID HALF PANEL #1; STANDARD PANEL

SCALE	DRAWING NUMBER	SHEET NO.	REV.
1 : 8	SSC-SDD-	1	

Date: February 17 and 18, 1992
Place: KEK Main Building meeting room (1st floor, next to Library)

Participants: (to be)
Robert Kephart and Charles Grozis (FNAL)
Taka Kondou, Yoshikuni Doi, Yasuhiro Makida, Hiroshi Yamaoka
Nobuhiro Kimura, Ken-ichi Tanaka and Akira Yamamoto (KEK)
Susumu Mine, Hiroshi Mukai (Toshiba)
Hideo Kakui and Isamu Oono (IHI)

Agenda:

Feb. 17,

11:00 Opening address ..... T. Kondou / A. Yamamoto

11:10 General progress at Fermilab..... R. Kephart

11:20 General progress at KEK ..... A. Yamamoto

11:30 Changing of magnet length and its effect.....Kephart / Yamamoto

11:45 Magnetic force calculation ..... K. Tanaka
R. Kephart / R. Wands

12:15 Lunch break

13:15 Vacuum vessel
Isogrid option .....C, Grozis
Honeycomb option.....H. Yamaoka / I. Oono
Discussion on prototype .. ..all

14:30 Coil and Magnet Supporting:
FNAL option.....C. Grozis
KEK option.....Y. Makida / S.Mukai
Discussion .....all

15:15 Stability and quench analysis,.....Y. Makida

15:45 Chimney design ....A. Yamamoto / C. Grozis

16:15 Cryogenics Scheme.....Y. Doi / A. Yamamoto

16:30 Magnet Installation into the Detecto.....A. Yamamoto

16:45 Summary ..... T. Kondou / A. Yamamoto

17:00 Adjorn

Feb. 18,

---- Fermilab - KEK meeting ------

9:15 Discussions for further work

Honeycomb Vacuum Vessel

KEK H.Yamaoka
I H I I.Oono
H.Kakui

Contents

1. Introduction
2. Design conditions
3. Design concepts
4. Honeycomb desigen
5. Effective thickness
6. Weight reduction ratio
7. Radiation thickness
8. Summary of honeycom design
9. Brazed honeycomb shell R&D

1. Introduction

The brazed honeycomb shell and its possible application to the SDC outer shell has been studied.

- Features
  - Consistent high strength
  - Applicability of welding,etc.
- Geometric properties

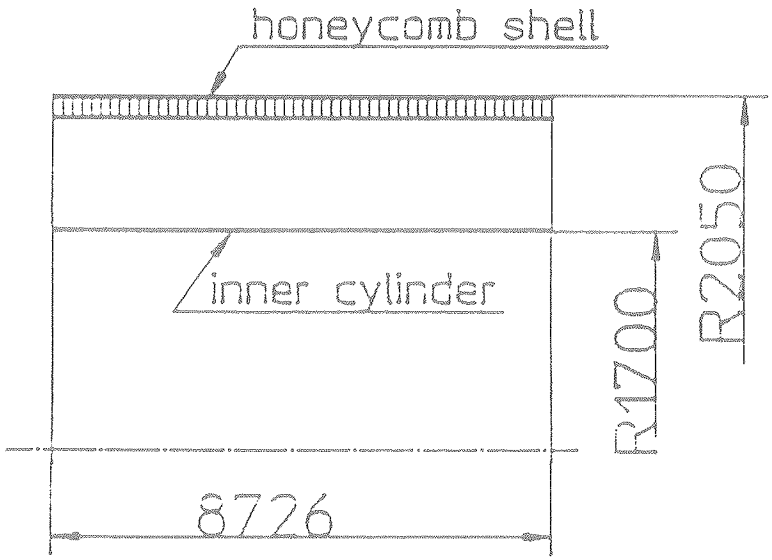

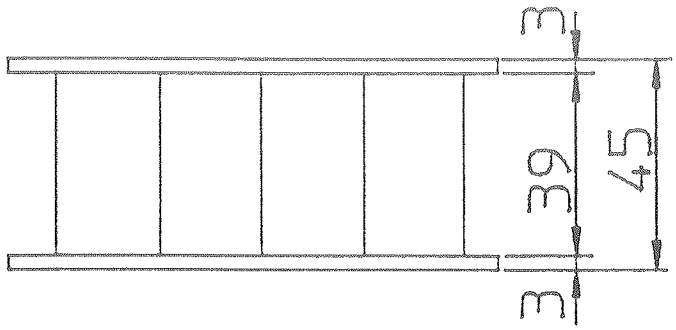

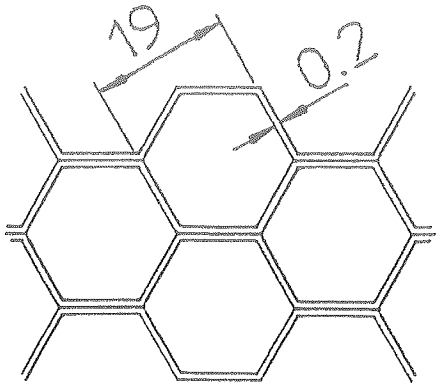

2. Design conditions

1) Loading

lateral → External pressure

1 atm

Axial → External pressure

1 atm

Magnetic force

80 tons

We get a safety factor of 2 for the honeycomb design against the external pressure.

2) Material properties : A6951-T6

Young's modulas : 7000kg/mm^2

Poisson's ratio : 0.3

3) Allowable stress

Tensile strength : 25kg/mm^2

Yield strength : 21kg/mm^2

allowable stress : 6.2kg/mm^2

3. Design concepts

There are 4 theoritical equations.

ⓐ [CYLINDERS UNDER THE UNIFORM EXTERNAL PRESSURES]

ⓑ [STRUCTURAL ANALYSIS OF SHELLS]

ⓒ Combined equivalent bending and extensional stiffness method

ⓓ Equivalent bending stiffness method

ⓐ, ⓑ → They both have the same theory but ⓑ is given the compensation value of the diffrence between the measurement and the theoritical value.

ⓒ → Considerations of bending and extensional stiffness

ⓓ → Just considerations of bending stiffness

We chose ⓑ for the honeycom desian

新
O.B.S
624.04

石川島播磨重工業株式会社図書

STRUCTURAL ANALYSIS OF SHELLS

E. H. BAKER
Professor of Mechanical Engineering, California State Polytechnic College at San Luis Obispo

L. KOVALEVSKY
Member of the Technical Staff Rockwell International Corp. North American Aircarft Group

F. L. RISH
Member of the Technical Staff Rockwell International Corp. Space System Group

図書登録番号
第 31252 号
昭和 56. 年 9. 月 10 日

ROBERT E. KRIEGER PUBLISHING COMPANY
HUNTINGTON, NEW YORK
1981

4. Honeycomb design

The ideal condition for the avoidance of buckling under the loading of lateral pressure and compressive force is

$$\boxed{\frac{P}{P_{cr}} + \frac{\sigma_c}{\sigma_{cr}} < 1}$$

P : External pressure

1 atm × SF.2 = 2 atm

P_{cr} : Allowable lateral buckling pressure

σ_c : Compressive stress

σ_{cr}: Allowable compressive buckling stress

We must determine P_{cr} , σ_c , σ_{cr} and satisfy this condition.

4-1) Calculate the lateral buckling pressure : P_{cr}

○ Design steps

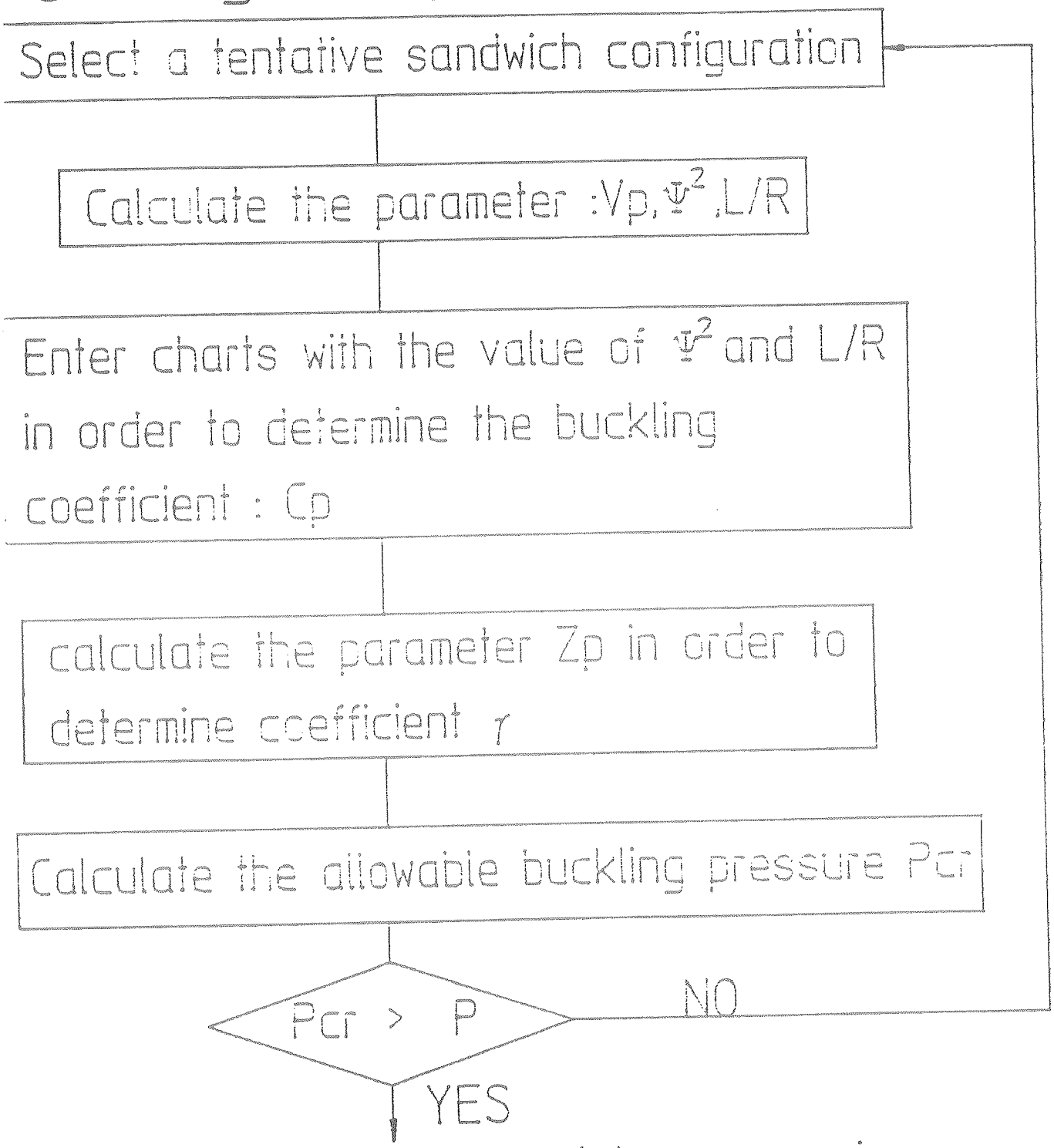

Consideration of the axial compressives buckling stress

[illegible] facing thickness t become

$t = [illegible] - 0.13 - (3 \times 0.06)$

$= [illegible]$ mm (Minimum thickness of 6951)

Facing plate tolerance

→ 0.13 mm

t_{in} : 4045 thickness

→ (3×0.06)mm

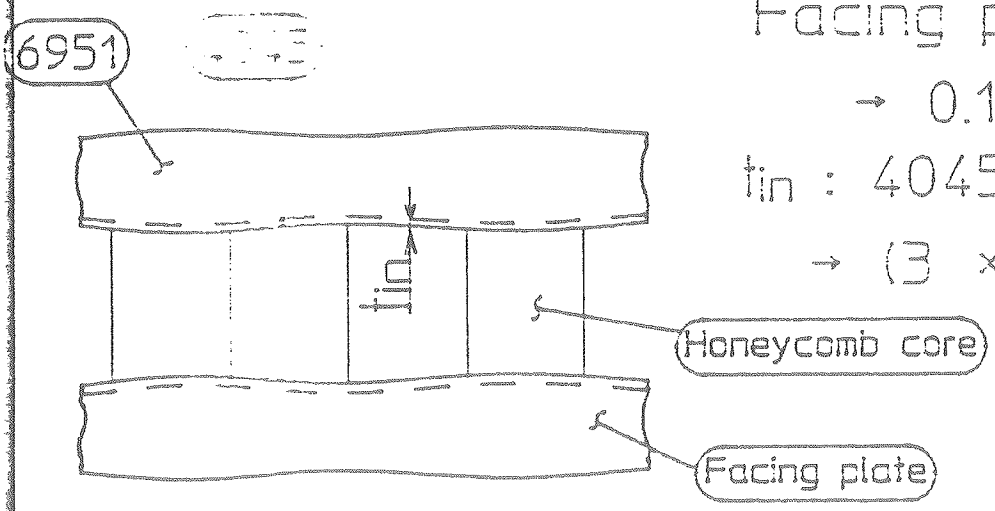

$G_{\theta z}$: Transverse shear modulas of the core in circumferential direction.

$$G_{\theta z} = \frac{1}{\sqrt{3}} \frac{h_c}{b} G$$

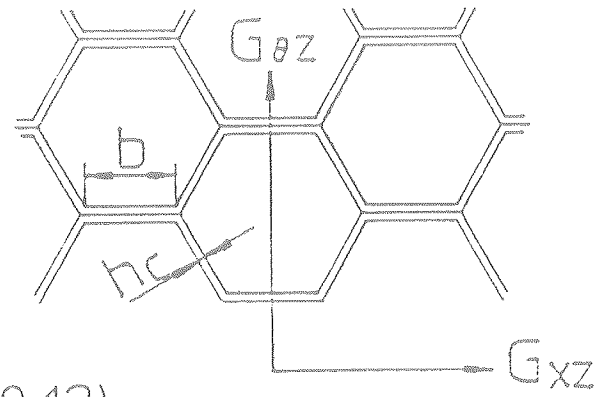

$h_c = 0.2 - 0.03 - (0.2 \times 0.12)$

$= 0.146$ mm

$G = 0.3 \times 7000$

$= 21000$ kg/mm²

G : Shear modulas of alminum

$G_{\theta z} = 16$ kg/mm²

$\bar{V}_p = 0.006232$, $\psi^2 = 0.0001089$

$\frac{L}{R} = 4.3$, $C_p = 0.0012$

$Z_p = 488.9$, $\gamma = 0.9$

so that p_{cr} becomes

$$P_{cr} = \frac{\gamma C_p}{1-\mu^2} \cdot \frac{2Et}{R}$$

$$= \frac{0.9 \times 0.0012}{1-0.3^2} \cdot \frac{2 \times 7000 \times 2.69}{2027.5}$$

$$= 0.0228 \ kg/mm^2$$

$$= 2.28 \ kg/cm^2$$

4-2) Calculate the compressive buckling stress : σ_{cr}

○ Design steps

Calculate the parameter : V_c

↓

Enter charts with the value of V_c, G_{xz}/G in order to determine the buckling coefficient : C_c

↓

Enter charts with the value of ρ, R/ρ in order to determine the coefficient γ

↓

Calculate the compresive buckling stress σ_{cr}

We calculated each parameter.

$V_c = 0.1899$, $G_{xz} = 24\ kg/mm^2$

$\frac{G_{xz}}{G_{\theta z}} = 1.5$, $C_c = 0.8$

$\rho = 21.16\ mm$, $\frac{R}{\rho} = 95.8$

$\gamma = 0.76$

$$\sigma_{cr} = \eta \gamma C_c E \frac{C+t}{R\sqrt{1-\mu^2}}$$

$$= 1 \times 0.76 \times 0.8 \times 7000 \times \frac{39.62 + 2.69}{2027.5\sqrt{1-0.3^2}}$$

$$= 93.1\ kg/mm^2$$

Although σ_{cr} is over the yielding stress, σ_{cr} replaced by yielding stress for conservative design.

So that

$\sigma_{cr} = 21\ kg/mm^2$

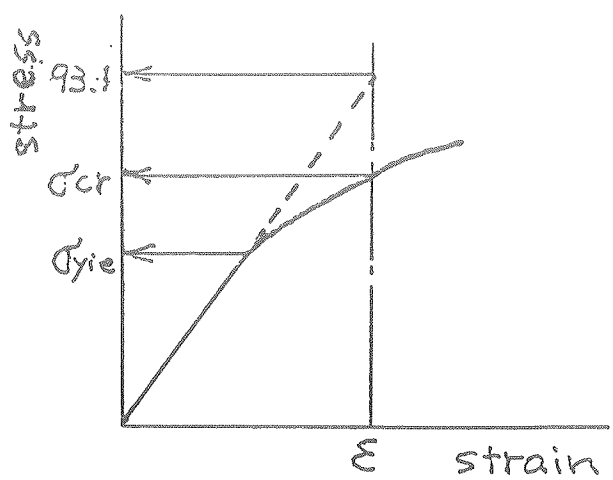

4-3) Calculated the axial compressive stress σ_c

cross sectional area

$A = 68537\ mm^2$

(a) loading (Applied magnetic force)

$F = 82467\ kg + 80000\ kg$

the axial compressive stress

$\sigma_c = 2.37\ kg/mm^2$

(b) loading (No magnetic force)

$F = 82467\ kg + 0\ kg$

the axial compressive stress

$\sigma_c = 1.21\ kg/mm^2$

4-4) Evaluations of buckling

$$\frac{P}{P_{cr}} + \frac{\sigma_c}{\sigma_{cr}}$$

(Applied magnetic force)	(No magnetic force)
$= \frac{2}{2.28} + \frac{2.37}{21}$	$= \frac{2}{2.28} + \frac{2.1}{21}$
$= 0.88 + 0.11$	$= 0.88 + 0.1$
$= \underline{0.99 < 1}$	$= \underline{0.98 < 1}$

This configuration does not buckling against external pressure and compressive force.

5. Effective thickness

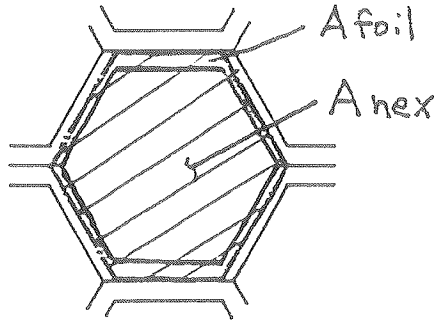

The cross sectinal area of the foil of the unit cell is

$$A_{foil} = 8.78 \text{ mm}^2$$

The cross sectional area of the hexagon of the unit cell is

$$A_{hexagn} = 312.6 \text{ mm}^2$$

Effective thickness of the core is

$$t_{ef.core} = \frac{8.78}{312.6} \times 39$$

$$= 1.1 \text{ mm}$$

The total effective thickness is

$$t_{ef} = 2 \times 3 + 1.1$$

$$= 7.1 \text{ mm}$$

6. Weight reduction ratio

If we designed a vacuum vessel with a solid plate,how much thickness will be required?

(NASA-SP8007)

$$\boxed{P_{cr} = \frac{0.855}{(1-\mu^2)} \quad \frac{E\sqrt{\tau}}{(R/t)^{5/2}(L/R)}}$$

R : 2050 mm , E : 7000 kg/mm^2

μ : 0.3 , L : 8726 mm

$\sqrt{\tau}$: 0.75 , Pcr: 2.28 kg/cm^2

t_{solid} = 27.2 mm

$$\frac{t_{ef}}{t_{solid}} = \frac{7.1}{27.2}$$

$$\boxed{\frac{t_{ef}}{t_{solid}} = \frac{1}{3.83}}$$

8. Summary of honeycomb design

Cryostat inner radius	1.70 m
outer radius	2.05 m
total half length	4.363 m

Honeycomb Outer Vacuum Shells

Alminum alloy	A6951/A4045
Total thickness	45 mm
Skin thickness	3.0 + 3.0 mm
Skin layers	double
Node configuration	hexagon
Effective thickness	7.1 mm
Weight reduction ratio	1/3.83
Radiation thickness	0.0798Xo

9. Brazed honeycomb shell R&D

Mr. Oono talking about this part.

Date: February 17 and 18, 1992
Place: KEK Main Building meeting room (1st floor, next to Library)

Participants: (to be)
Robert Kephart and Charles Grozis (FNAL)
Taka Kondou, Yoshikuni Doi, Yasuhiro Makida, Hiroshi Yamaoka
Nobuhiro Kimura, Ken-ichi Tanaka and Akira Yamamoto (KEK)
Susumu Mine, Hiroshi Mukai (Toshiba)
Hideo Kakui and Isamu Oono (IHI)

Agenda:

Feb. 17,

11:00 Opening address ..... T. Kondou / A. Yamamoto

11:10 General progress at Fermilab..... R. Kephart

11:20 General progress at KEK ..... A. Yamamoto

11:30 Changing of magnet length and its effect.....Kephart / Yamamoto

11:45 Magnetic force calculation ..... K. Tanaka
R. Kephart / R. Wands

12:15 Lunch break

13:15 Vacuum vessel
Isogrid option .....C. Grozis
Honeycomb option.....H. Yamaoka / I. Oono
Discussion on prototype .. ..all

14:30 Coil and Magnet Supporting:
FNAL option.....C. Grozis
KEK option.....Y. Makida / S.Mukai
Discussion .....all

15:15 Stability and quench analysis,.....Y. Makida

15:45 Chimney design ....A. Yamamoto / C. Grozis

16:15 Cryogenics Scheme.....Y. Doi / A. Yamamoto

16:30 Magnet Installation into the Detecto.....A. Yamamoto

16:45 Summary ..... T. Kondou / A. Yamamoto

17:00 Adjorn

Feb. 18,

---- Fermilab - KEK meeting ------

9:15 Discussions for further work

OHP for

SDC 電磁石 Workshop

IHI 大野

9. Brazed Honeycomb Shell R&D

(1) Characteristics of Honeycomb

- Brazing processes
- Mechanical Strengthes
- Weldability

(2) Outline of R&D Honeycomb Vacuum Vessel

- Configuration of R&D Vacuum Vessel
- Parameters of R&D Vacuum Vessel

(3) Fabrication of R&D Vacuum Vessel

- Fabrication Sequence
- Bending of Honeycomb Panels

Characteristics of Honeycomb Panels

Light Weight

Large Stiffness

Easy to Weld

High Heat Resistance

High Reliability (no Epoxy Adhesive)

① Corrugating

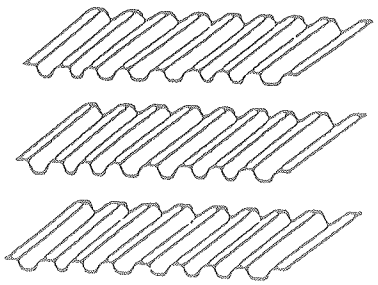

② Assembly of cores

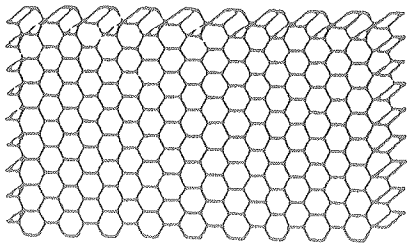

③ Brazing of cores and face sheets

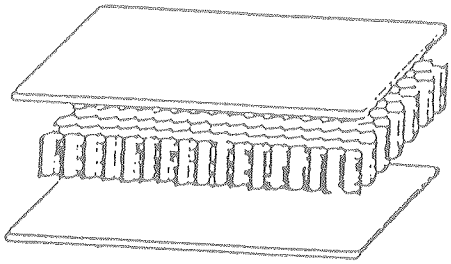

④ Completed panel

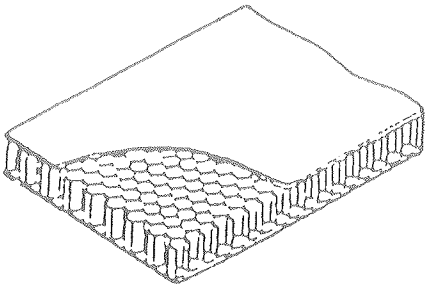

Brazing processes of honeycomb panels.

brazing sheet: 6951/4045

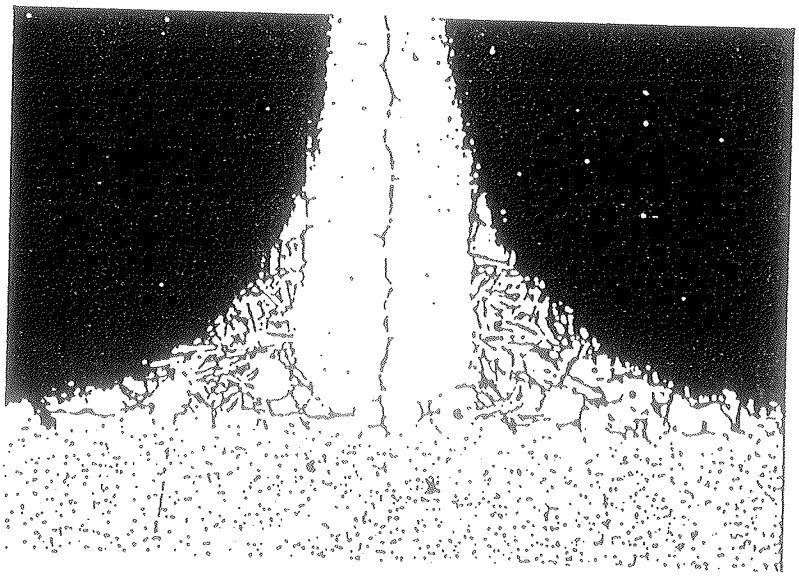

Cross section of Brazed Joint.

Mechanical Strengthes of Brazed Honeycomb Panels

by Sumitomo Light Metal Co.,Ltd.

Spec. of Test Panel

Honeycomb Total Thickness	: 26.6mm
Skin Material	: 6951/4045
Skin Thickness	: 1.0mm
Core Material	: 6951/4045
Core Thickness	: 0.2mm
Cell Size	: 19mm

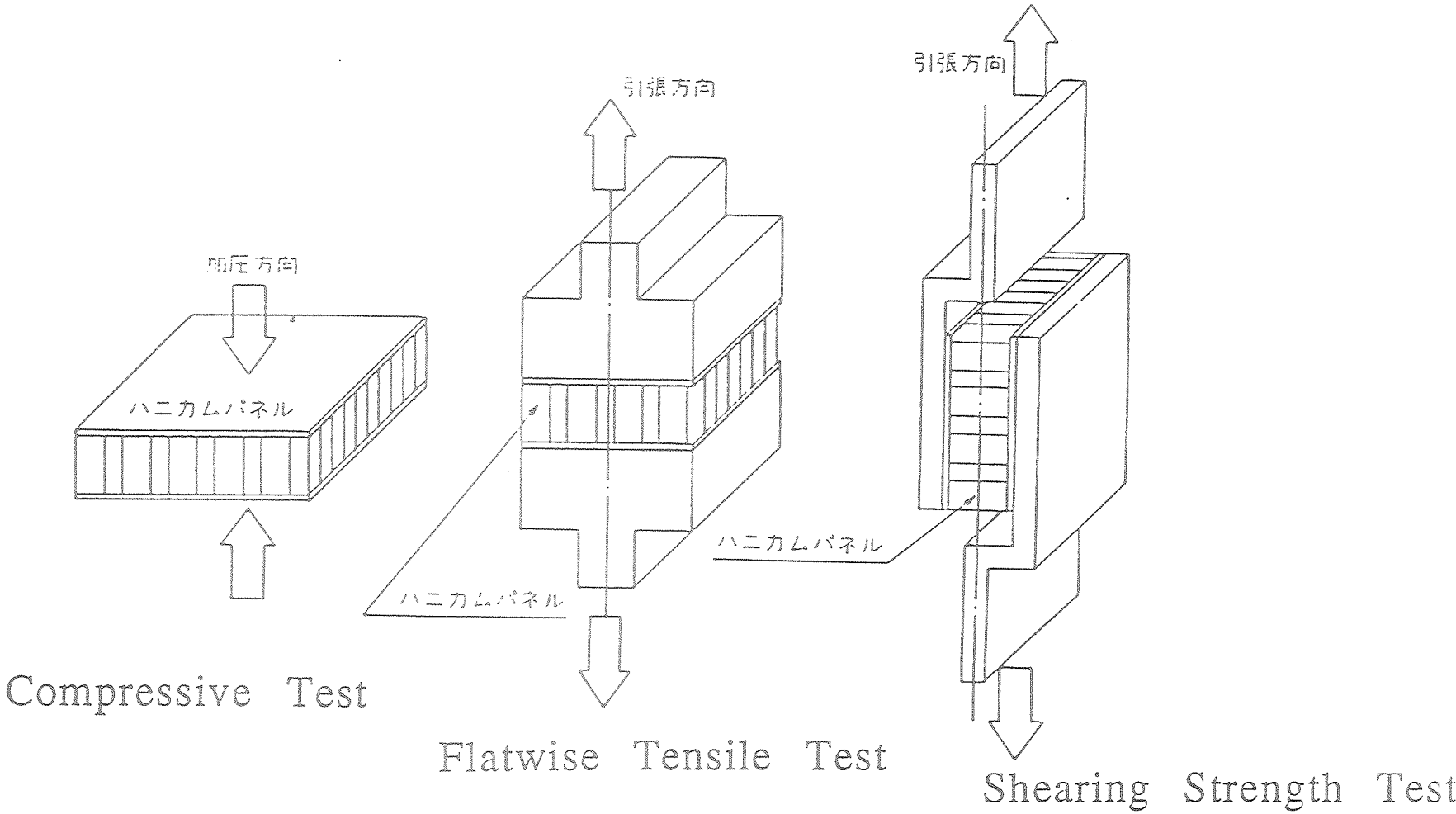
加圧方向
ハニカムパネル
Compressive Test
引張方向
ハニカムパネル
Flatwise Tensile Test
引張方向
ハニカムパネル
Shearing Strength Test

Test Items

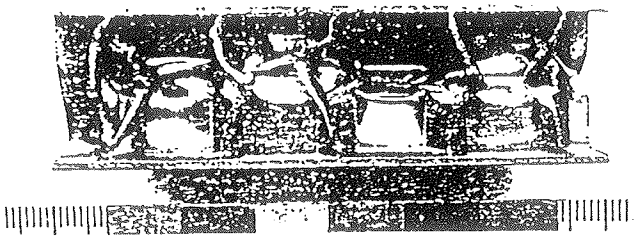

(a) 三軸試験

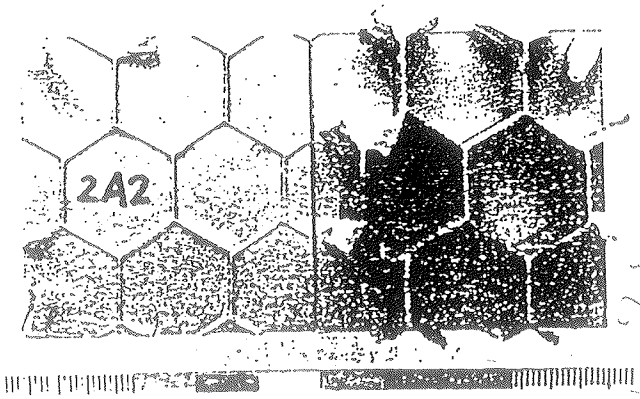

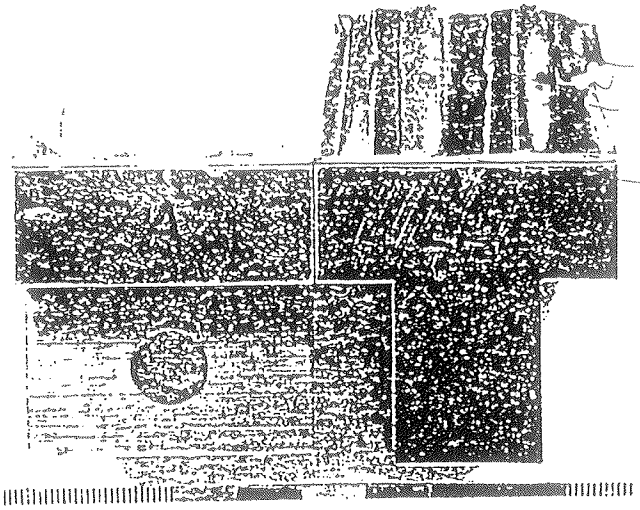

(b) フ[illegible]ライズ引張試験

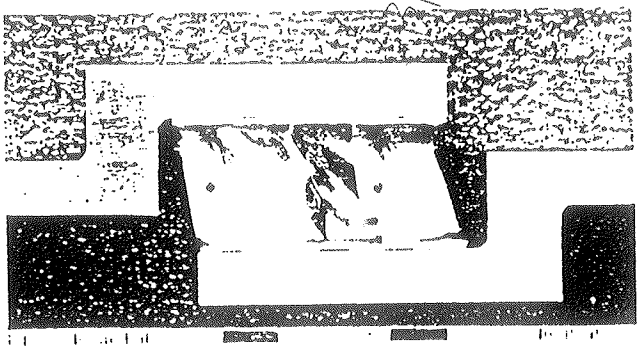

(c) せん断試験

Test Results

		Brazed Honeycomb Panel	
		As brazed	after Heat Treatment
Compressive Strength (Stress in cores)		18.9kg／cm² (6.7kg／mm²)	30.4kg/cm² (10.8kg/mm²)
Flatwise Tonsile Strength (Stress in cores)		35.5kg／cm² (12.6kg／mm²)	37.8kg/cm² (13.4kg/mm²)
Shearing Strength	L direction	12.3kg／cm²	14.9kg/cm²
	W direction	6.5kg／cm²	9.3kg/cm²

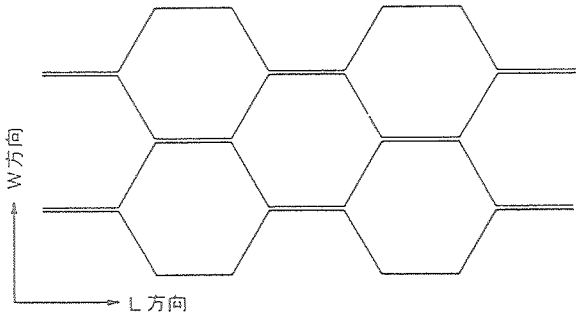

Weldability of Brazed Honeycomb Panels
(in welding facing plates together)

- less Deformation
  (large Stiffness)
- none of Cores melt down
- no affect to Brazed Joints
- no defect in Welded Joints

Conclusion : Easy to Weld

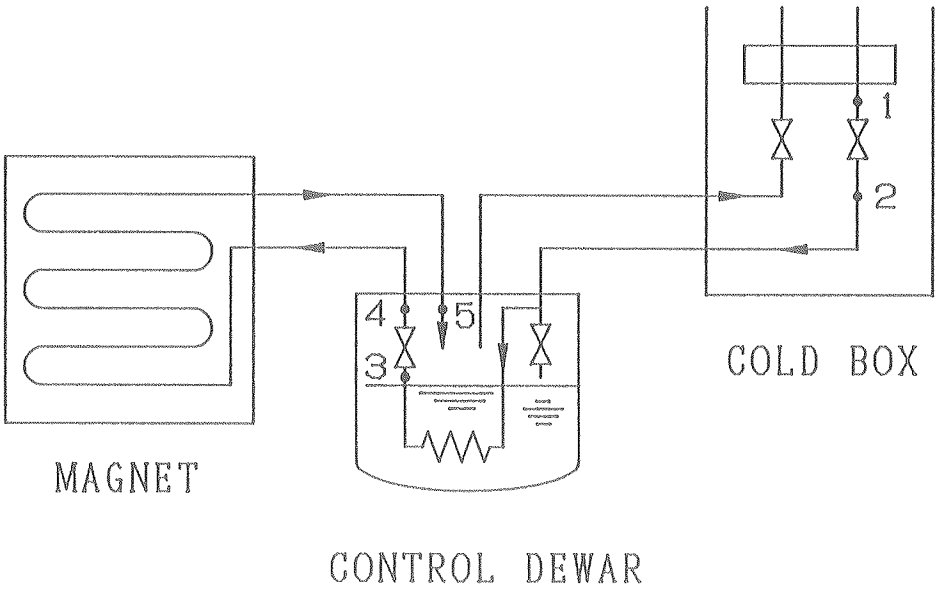

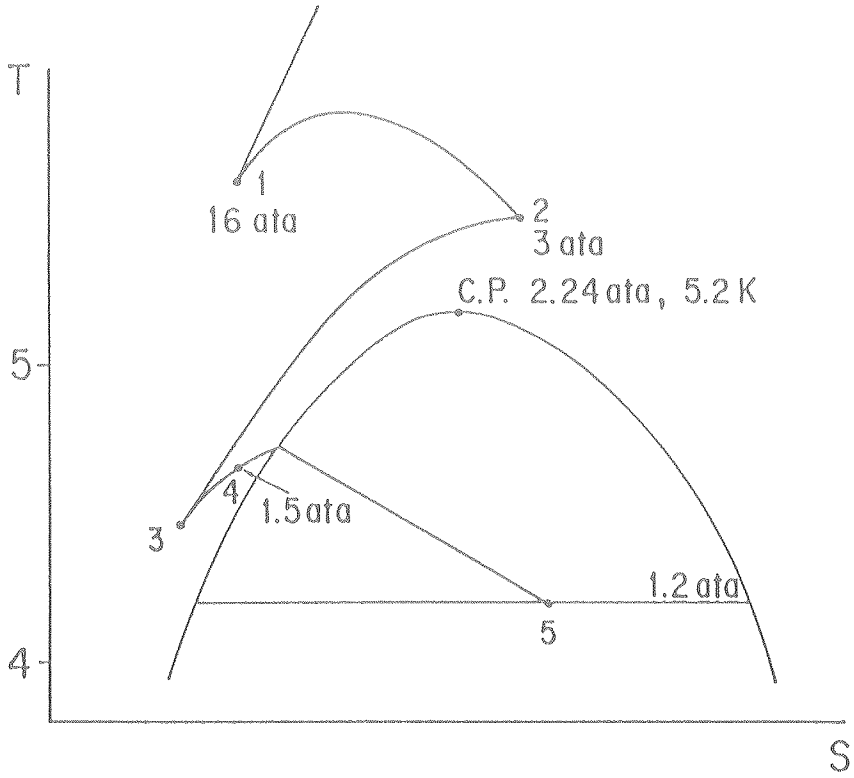

REFRIGERATION MODE

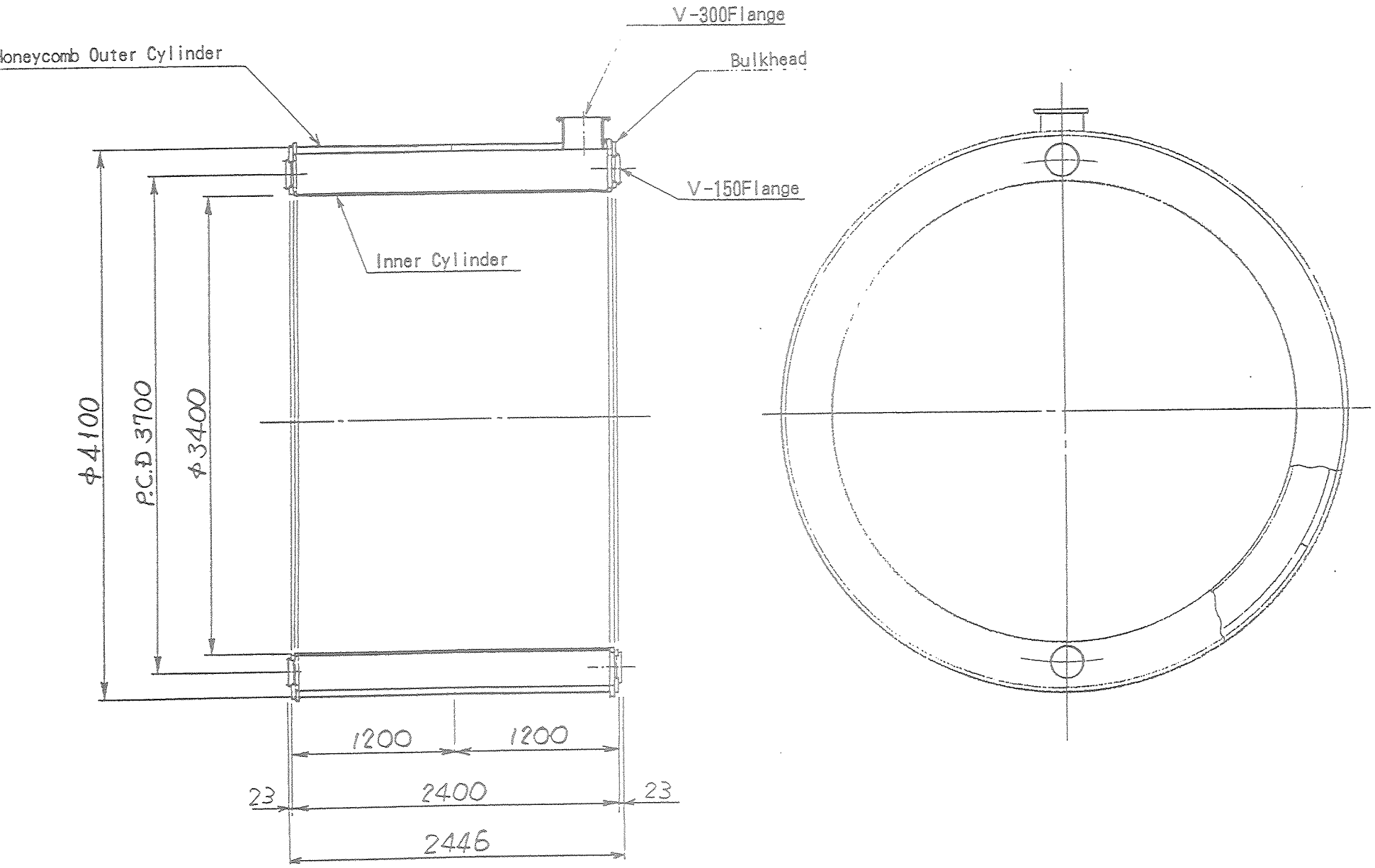

R&D Honeycomb Vacuum Vessel

Parameters of R&D Vacuum Vessel with Brazed Honeycomb

Vacuum Vessel

Inner Radius	: 1700mm
Outer Radius	: 2050mm
Total Length	: 2400mm

Outer Cylinder (Brazed Aluminum Honeycomb)

Material	: 6951/4045
Total Thickness	: 45mm
Skin Thickness	: 3.0+3.0mm
Node Configuration	: Hexagon
Effective Thickness	: 7.1mm

Inner Cylinder

Material	: A5083
Thickness	: 6mm

Bulkhead

Material	: A5083
Thickness	: 25mm

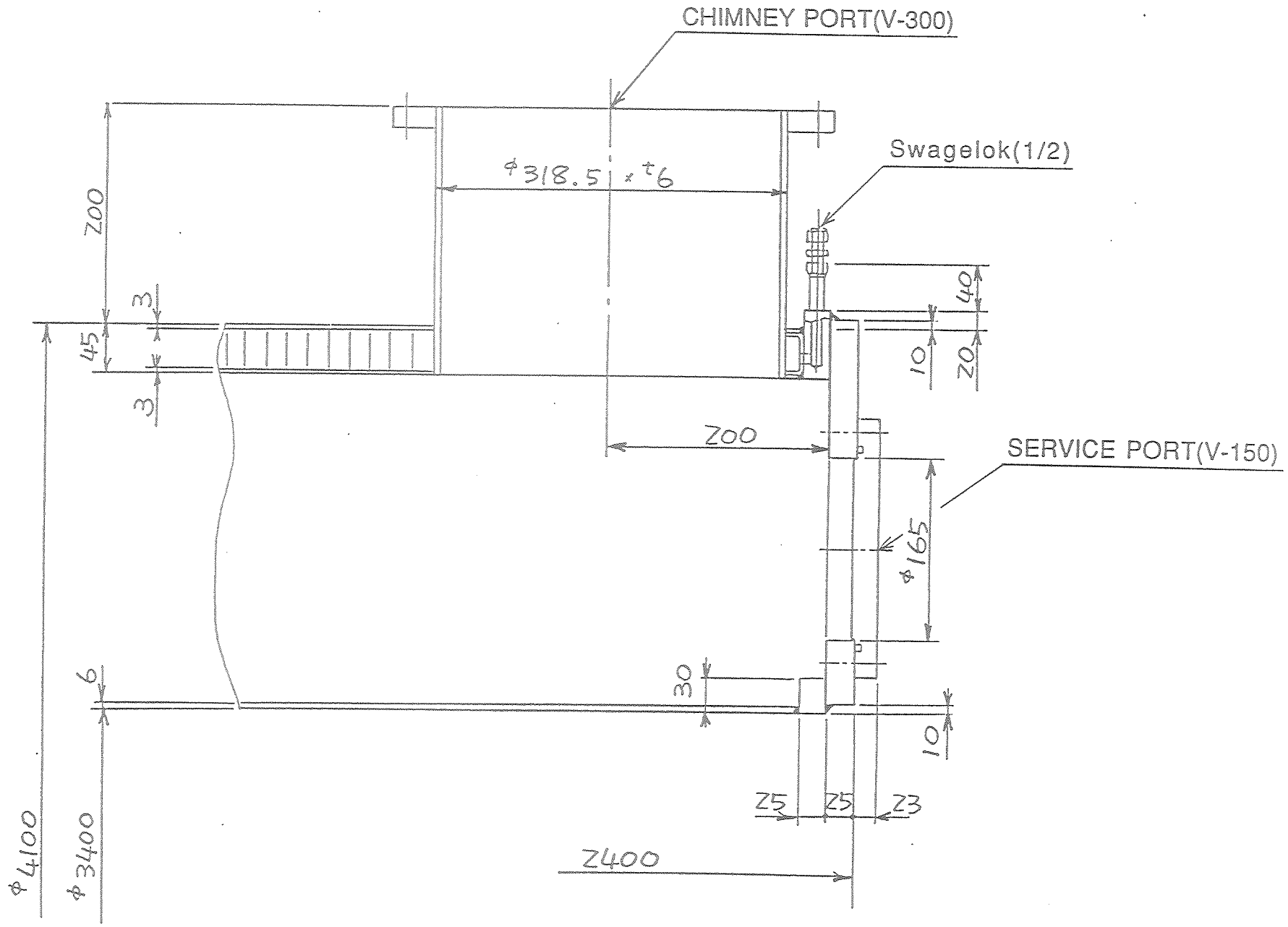
CHIMNEY PORT(V-300)
Swagelok(1/2)
SERVICE PORT(V-150)
φ318.5 × t6
200
3
45
3
6
φ4100
φ3400
200
φ165
30
40
10
20
10
25
25
23
2400

END SECTION

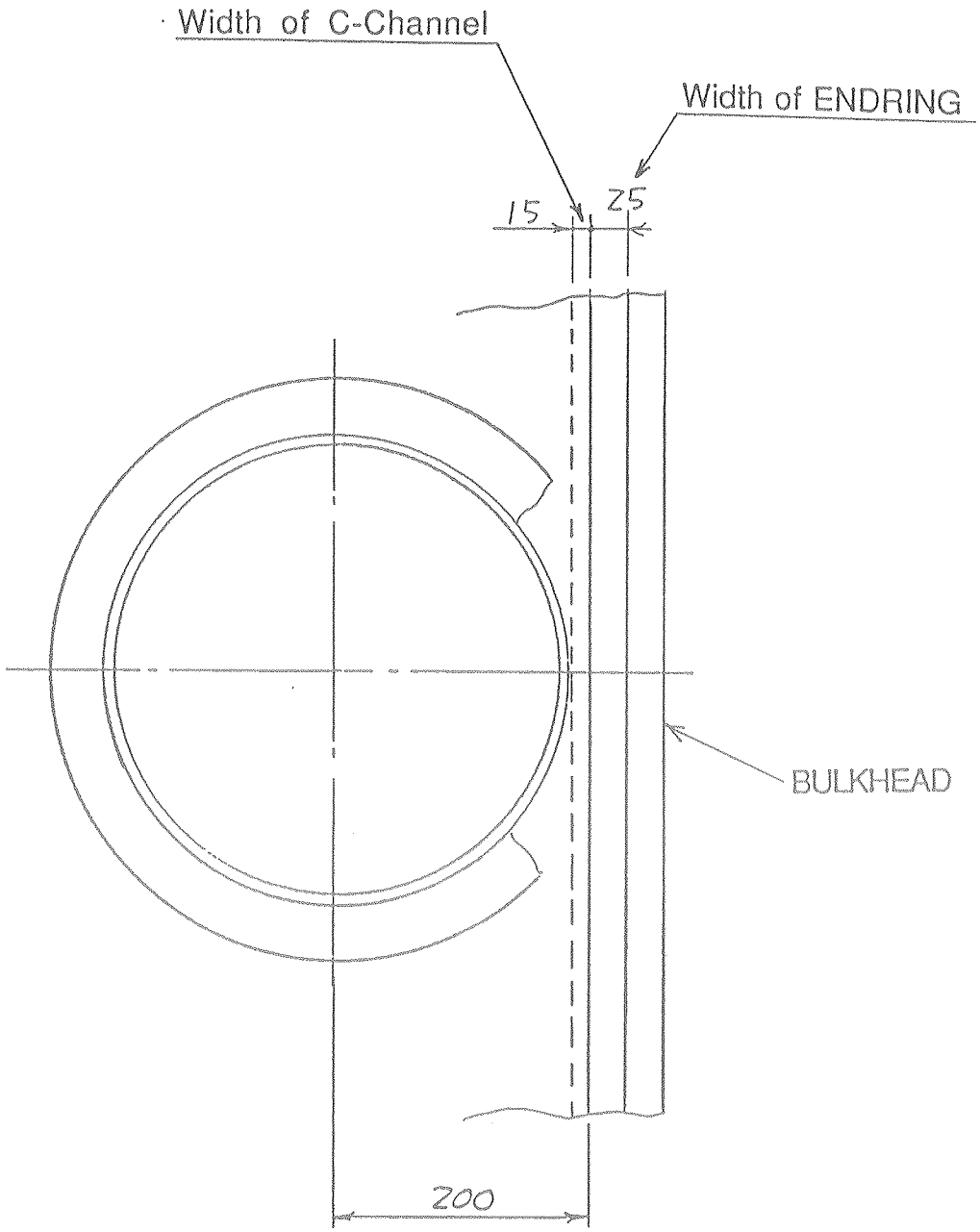

OVER VIEW

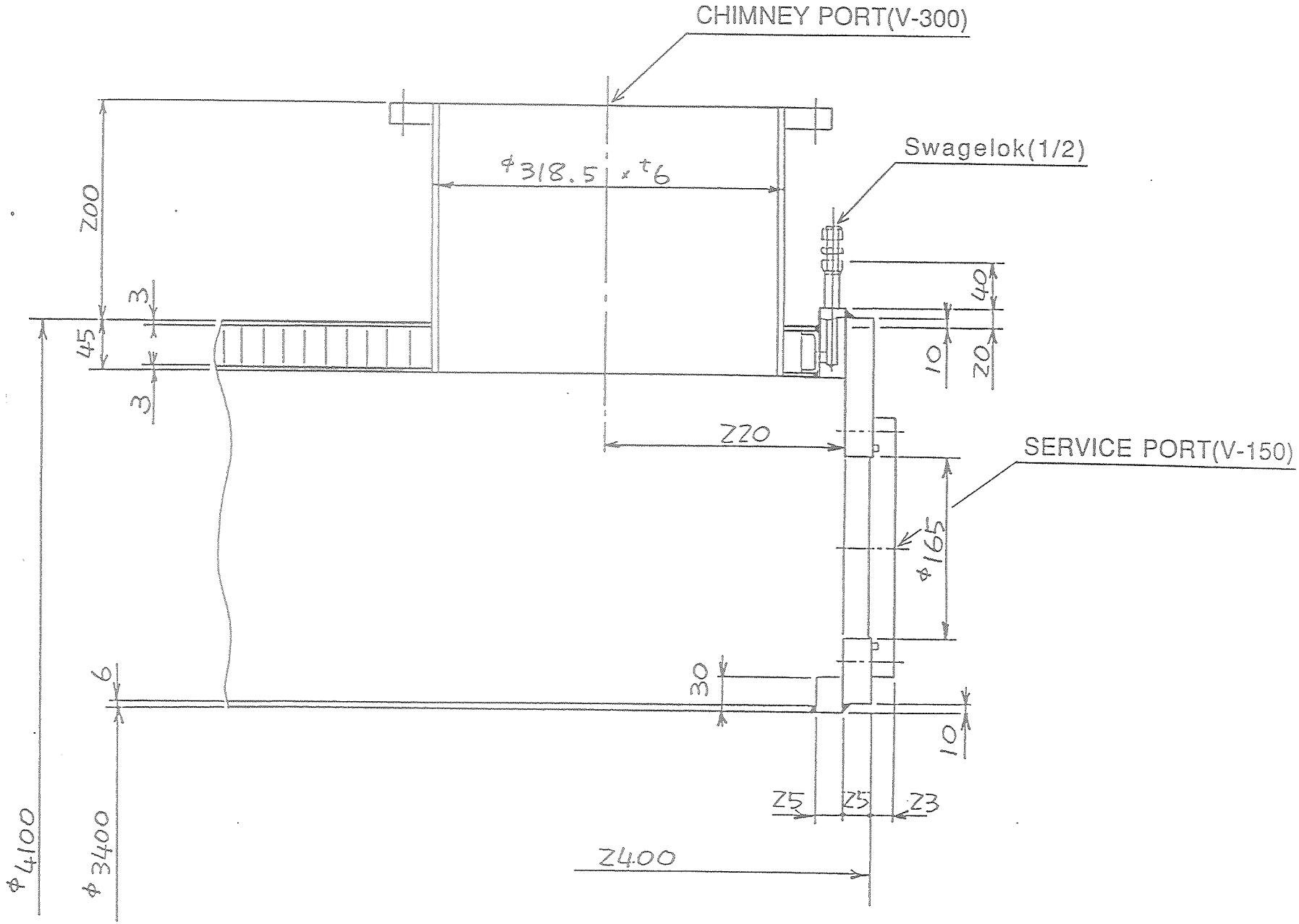

END SECTION (Recommended)

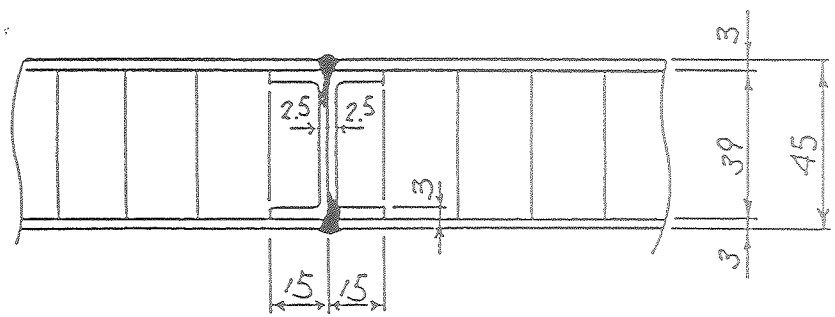

Circumferential Joint

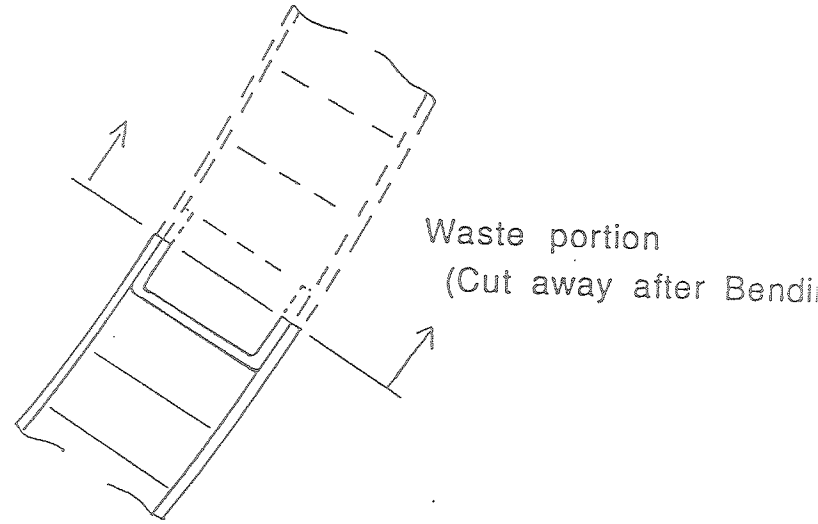

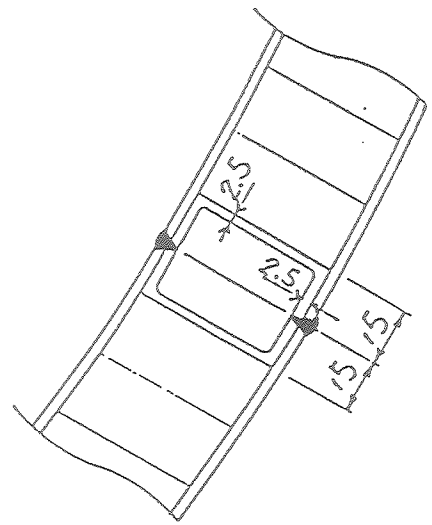

Longitudinal Joint

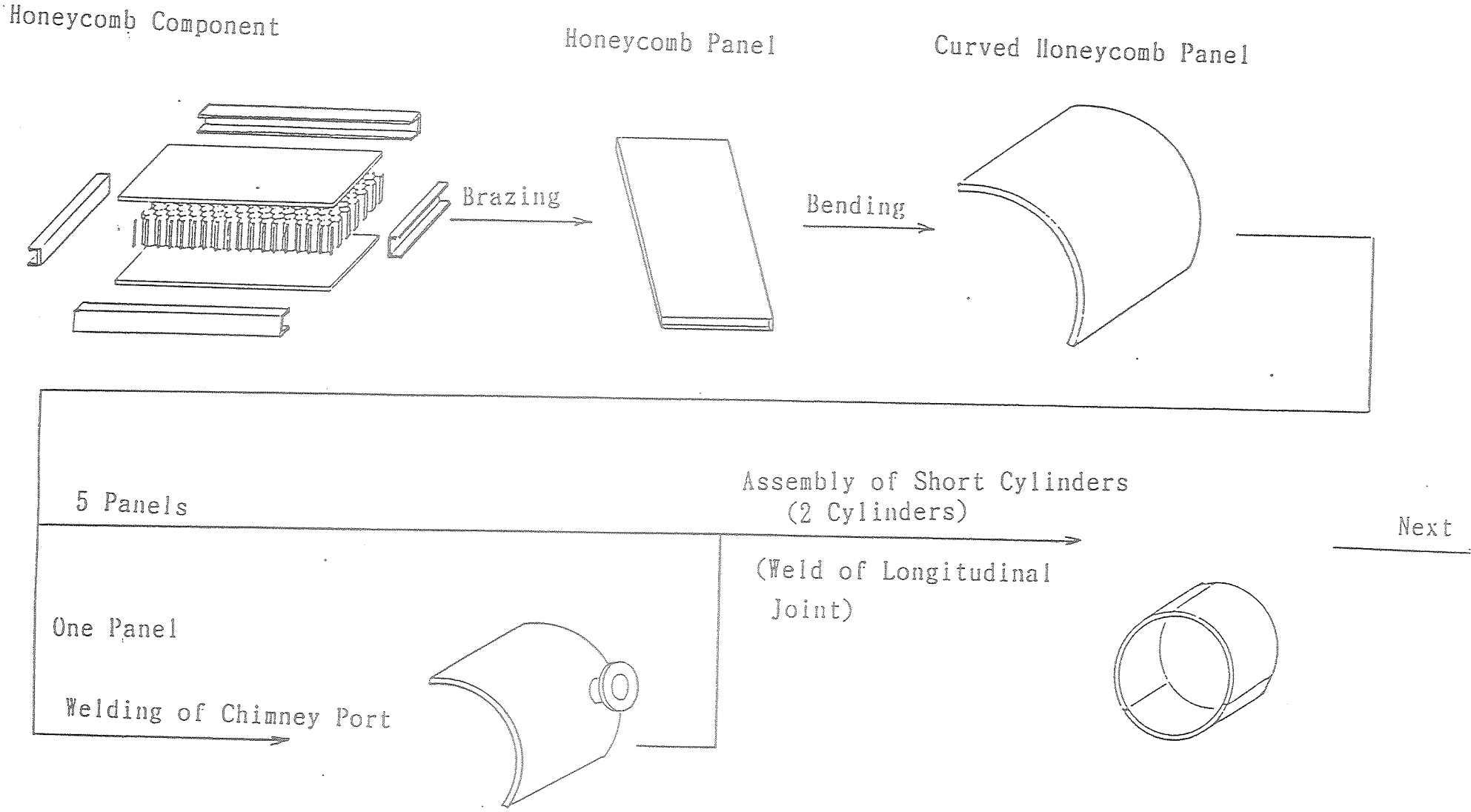
Honeycomb Component
Brazing
Honeycomb Panel
Bending
Curved Honeycomb Panel
5 Panels
Assembly of Short Cylinders
(2 Cylinders)
(Weld of Longitudinal
Joint)
Next
One Panel
Welding of Chimney Port

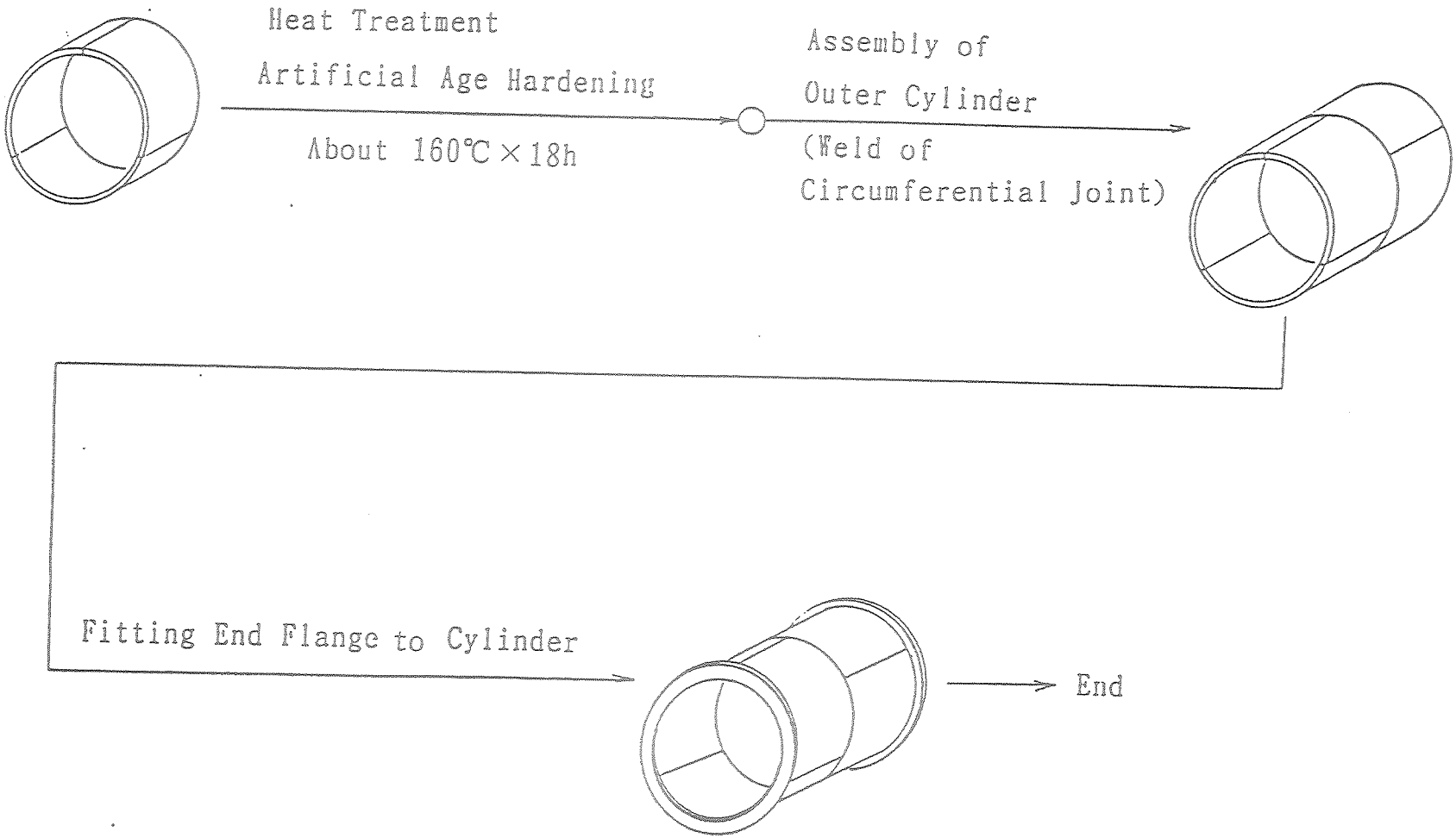
Heat Treatment
Artificial Age Hardening
About 160℃×18h
Assembly of
Outer Cylinder
(Weld of
Circumferential Joint)
Fitting End Flange to Cylinder
End

	3 POINT BENDING with Bending Roller	4 POINT BENDING
Concept	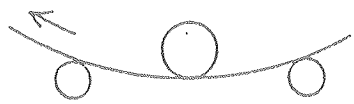	
Shearing Force Distribution	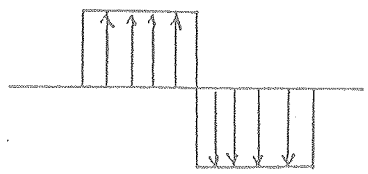	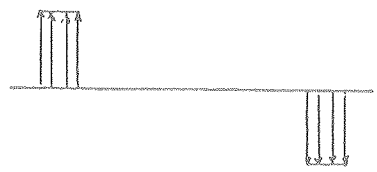
Bending Moment Distribution	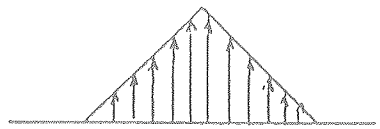	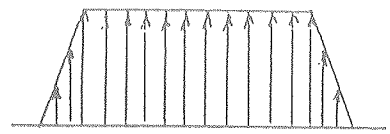
Possibility of Cores Collapsed	Expected	None
Possibility of Shearing Deformation	Expected	None
Bending Size	Long	Limited

Results of Bending R&D
(3 point Bending)

1st. Experiment : Bending plane honeycomb panel to pretty small radius

Spec. of honeycomb panel

Size : 900 mm × 1800 mm

Total th'k : 30 mm

Facing th'k : 3 mm + 2 mm

Results

Radius	Radius/Thickness	Thickness
1800	60	29.2
1360	45.3	29.0
1072	35.7	28.9
695	23.1	28.5

(for SDC CRYOSTAT R/T = 2050/45 ≒

We found that

- decrease of Thickness caused by Cores Collapsed.

- large shearing deformation at the both end.

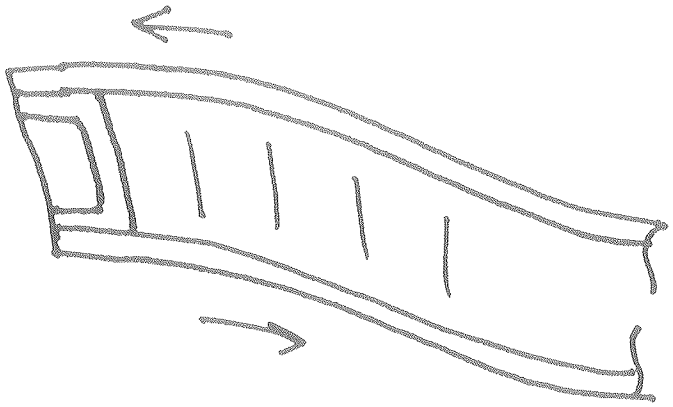

2nd. Experiment : Bending panel with constraint fixture

(These fixture was expected to prevent shearing deformation.)

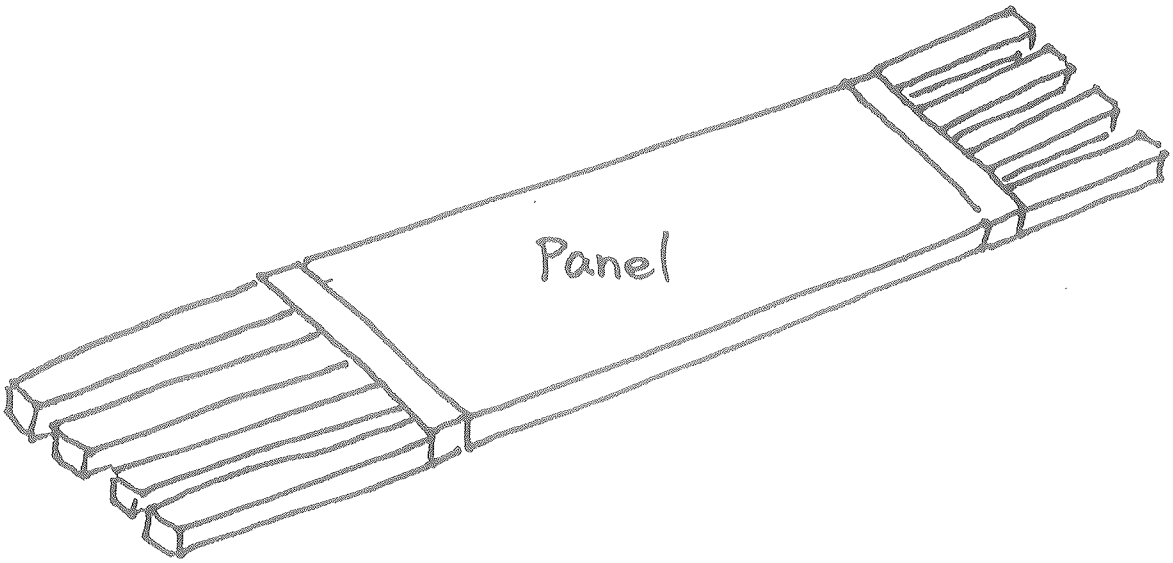

Spec. of panel is same as 1st experiment.

Results

- Decrease of thickness was also found at relatively large radius. ($R \cong 2200$ mm)

- Panel has deformed like following figure.
  Because of forcing to prevent shearing deformations.

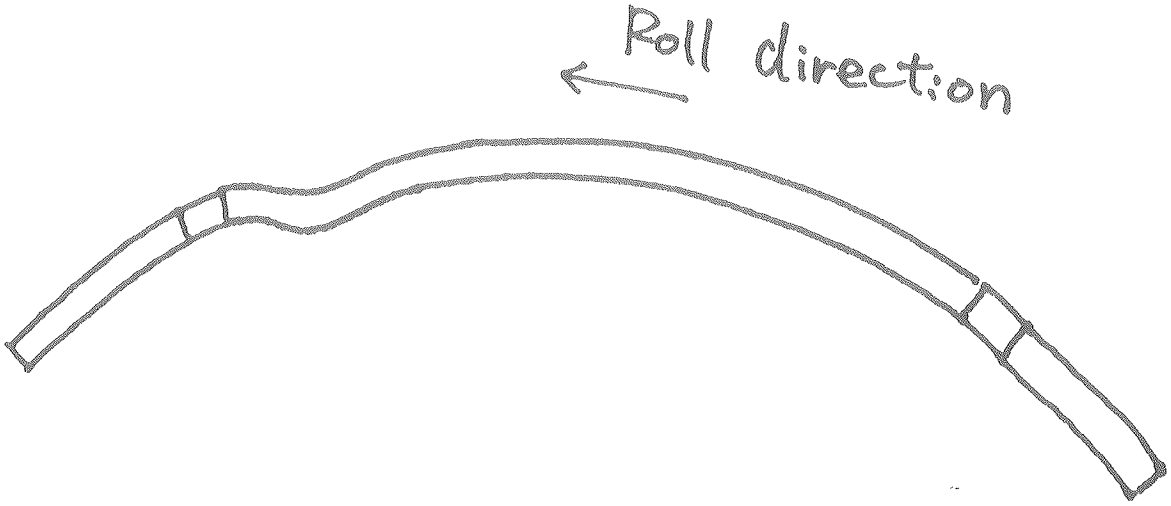

Conclusions through 1st & 2nd Experiments.

- We can not avoid
  - Cores Collapsed
  - Shearing deformations

  as far as using 3 point bending

- We can not use 3 point bending for honeycomb panel.

- We plan to apply 4 poind bending at next experiment.

Date: February 17 and 18, 1992

Place: KEK Main Building meeting room (1st floor, next to Library)

Participants: (to be)

Robert Kephart and Charles Grozis (FNAL)
Taka Kondou, Yoshikuni Doi, Yasuhiro Makida, Hiroshi Yamaoka
Nobuhiro Kimura, Ken-ichi Tanaka and Akira Yamamoto (KEK)
Susumu Mine, Hiroshi Mukai (Toshiba)
Hideo Kakui and Isamu Oono (IHI)

Agenda:

Feb. 17,

11:00 Opening address ..... T. Kondou / A. Yamamoto

11:10 General progress at Fermilab..... R. Kephart

11:20 General progress at KEK ..... A. Yamamoto

11:30 Changing of magnet length and its effect.....Kephart / Yamamoto

11:45 Magnetic force calculation ..... K. Tanaka
R. Kephart / R. Wands

12:15 Lunch break

13:15 Vacuum vessel
Isogrid option .....C, Grozis
Honeycomb option.....H. Yamaoka / I. Oono
Discussion on prototype .. ..all

14:30 Coil and Magnet Supporting:
FNAL option.....C. Grozis
KEK option.....Y. Makida / S.Mukai
Discussion .....all

15:15 Stability and quench analysis,.....Y. Makida

15:45 Chimney design ....A. Yamamoto / C. Grozis

16:15 Cryogenics Scheme.....Y. Doi / A. Yamamoto

16:30 Magnet Installation into the Detecto.....A. Yamamoto

16:45 Summary ..... T. Kondou / A. Yamamoto

17:00 Adjorn

Feb. 18,

---- Fermilab - KEK meeting ------

9:15 Discussions for further work

COIL SUPPORTING
KEK OPTION

Y. Makida

CONTENTS

- Purpose of support system
- Loads on support system
- Suggested support system
- Transmission of loads to calorimeter

PURPOSE OF SUPPORT SYSTEM

Keep SC coil in geometric center against gravitational or electromagnetic loads (inside cryostat)

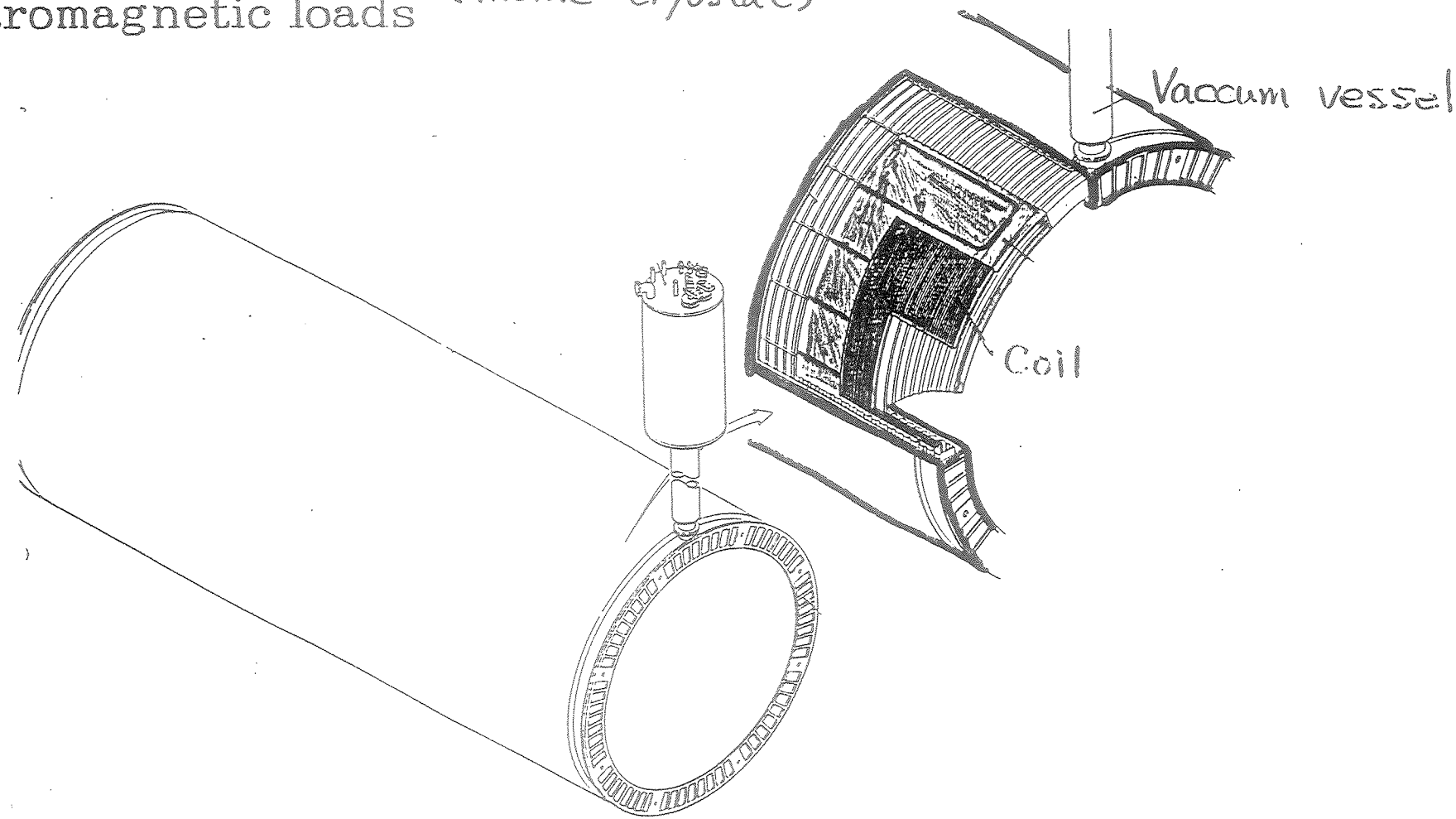

LOADS ON SUPPORT SYSTEM

Causes of loads

: Gravitational loads

- SC coil weight ~ 20 ton
- Shipping accerelation 2 G

: Electromagnetic loads

- Displacement from magnetic center < 25 mm
  - Tolerance in calorimeter < ~~25~~ 5 mm
  - Scintillator slot pattern
  - Air gaps in flux return path

if magnetic center = geometric center
(unstable equilibrium)
net force Zero

displacement ∝ decentering force

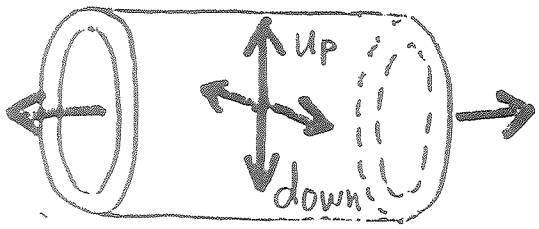

LOADS ON SUPPORT SYSTEM
Estimated loads

Function	Upward	Down ward	Left/Right	For-/Backward
< Gravitational loads >				
SC coil weight	-20 tonf	20 tonf		
Shipping or installation	40 tonf	40 tonf	40 tonf	40 tonf
< Electromagnetic loads > 25 mm displacement				
Decentering	5 tonf	5 tonf	5 tonf	40 tonf
Effective load	20 tonf	60 tonf	40 tonf	40 tonf

not at the same time

Suggested Support System

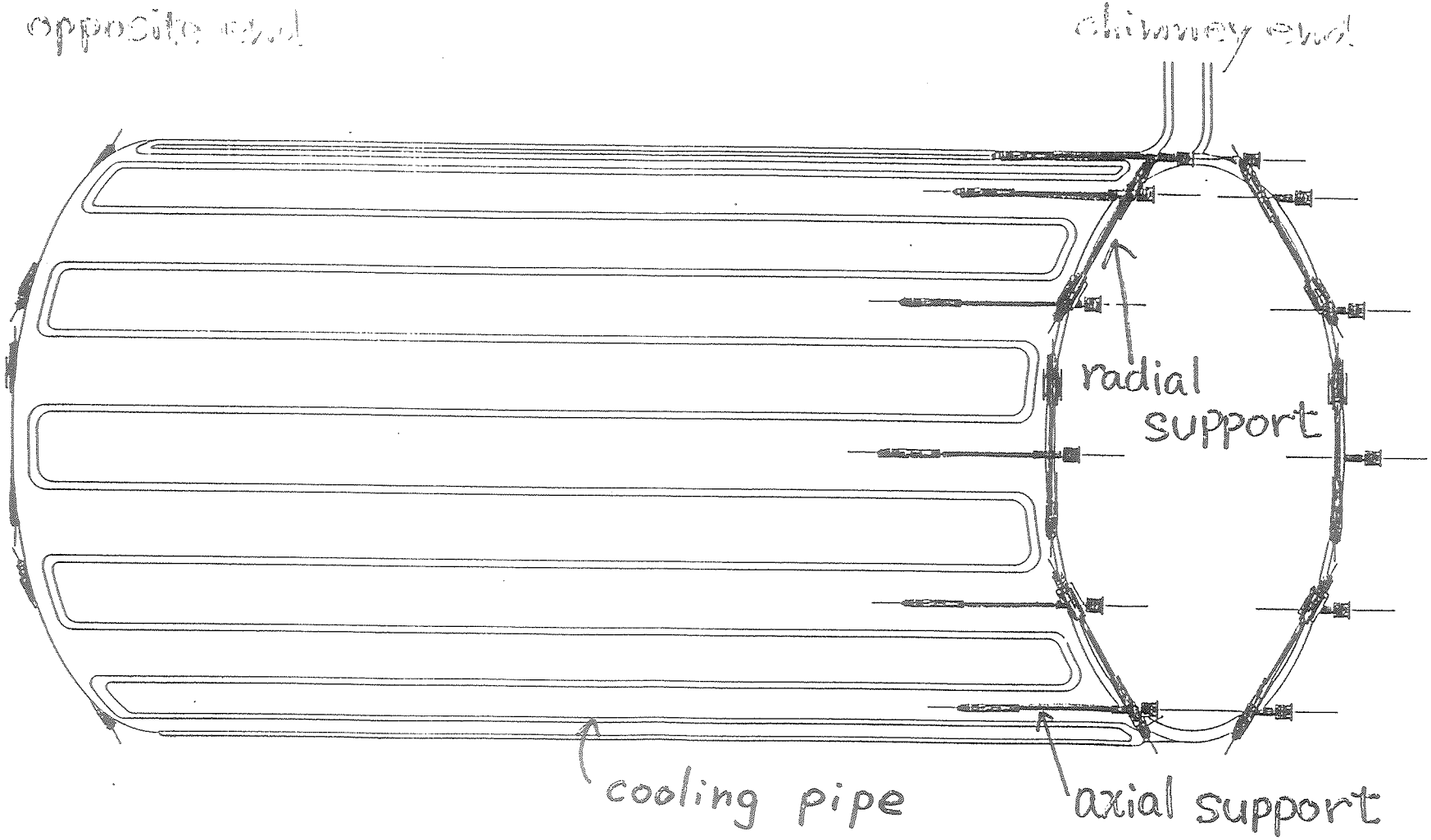

Bird-view of coil with support members

承認 APPROVED BY
調査 REVIEWED BY
担当 PREPARED BY
REV. 改訂
記事 CONTENTS
REVISIONS
尺度 SCALE
単位 UNITS
承認 APPROVED BY
調査 REVIEWED BY
担当 PREPARED BY
株式会社東芝
TOSHIBA CORPORATION
TOKYO JAPAN
図書 REGISTERED
名称 TITLE
図面番号 DRAWING NO.
2
PRESENT TO

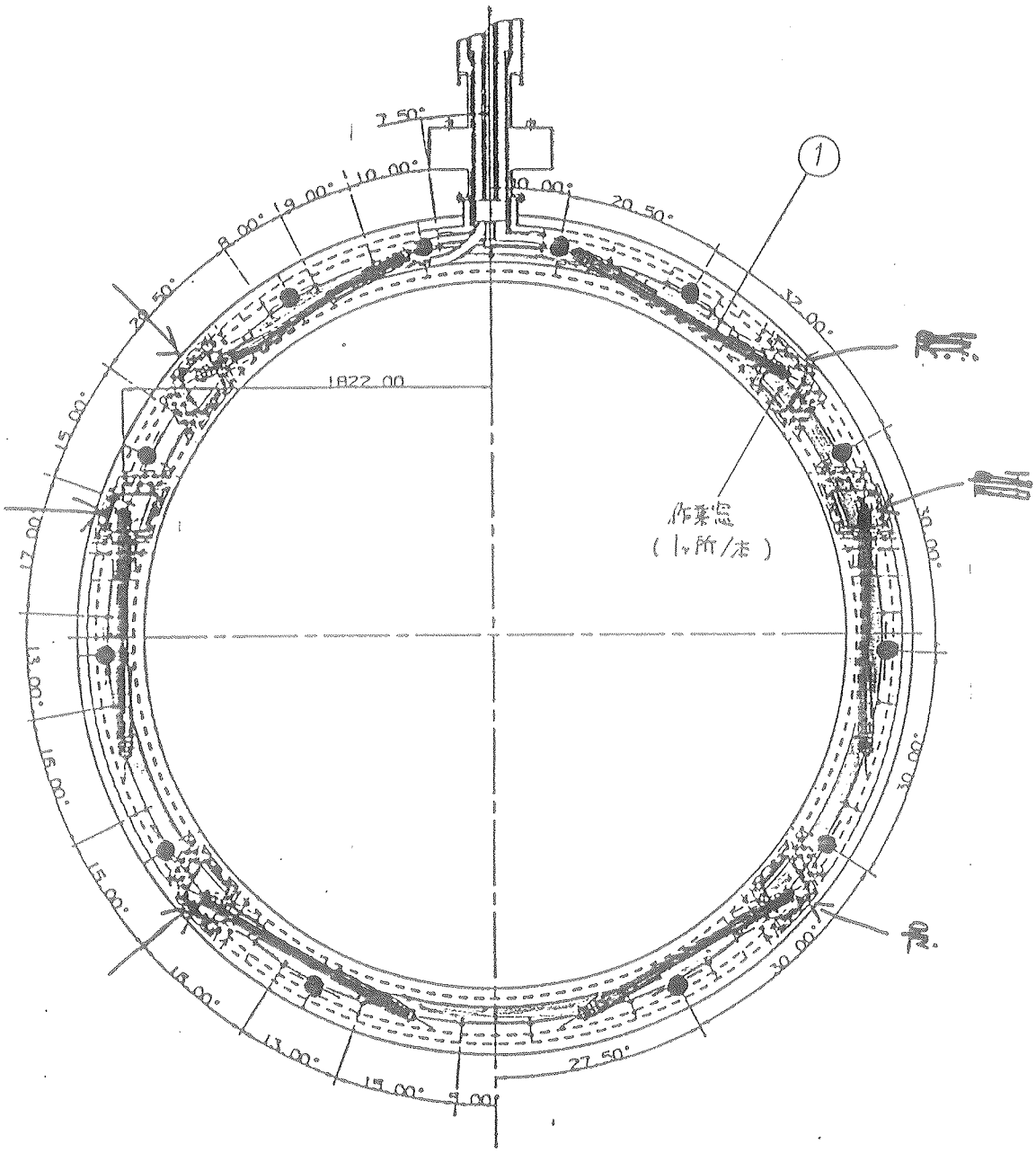

front view of chimney end

SUGGESTED SUPPORT COIL SYSTEM
Characteristics of each support rod

	radial	axial
Material	GFRP with Ti end fittings	
Number	6 × 2 (both ends)	12 (chimney end)
FRP diameter	30 mm	20 mm
Effective length	428 mm	300 mm
Young's modulus	39 MPa (4000 kg/mm^2)	39 MPa (4000 kg/mm^2)
Spring constant	65 MN/m (6.6 tonf/mm)	92 MN/m (9.4 tonf/mm)
Heat in leakage with 80 K thermal anchor	40 mW/rod	18 mW/rod
Load	tension	tension/compression
Buckling critical load		14 tonf/rod

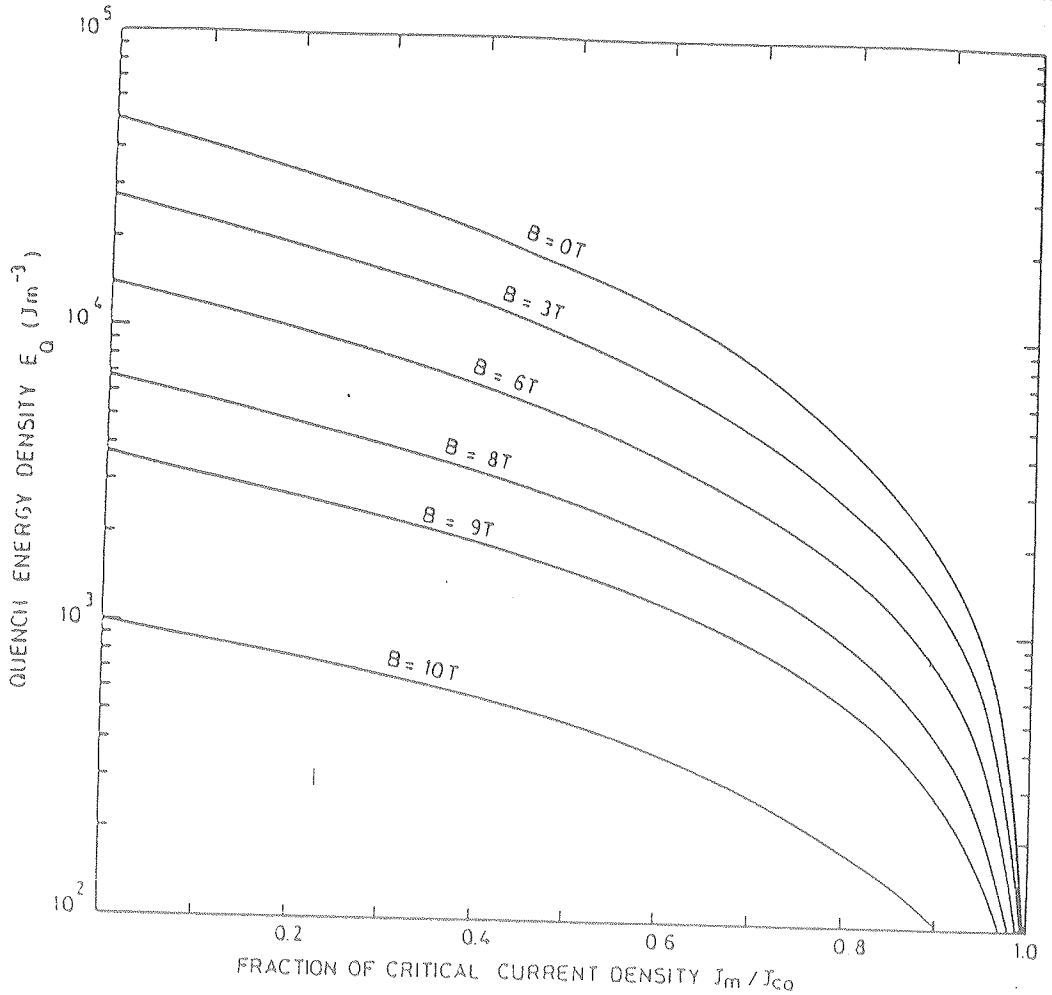

Fig. 5.7. Energy density of a distributed transient disturbance which is just sufficient to quench a niobium titanium magnet (based on the 'typical winding' in Fig. 5.4 and θ_0 = 4.2 K).

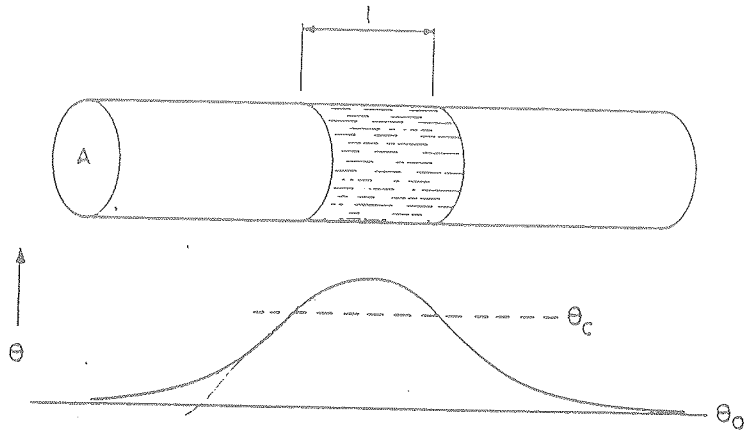

Fig. 5.8. A small normal zone created by a point disturbance in a current-carrying wire.

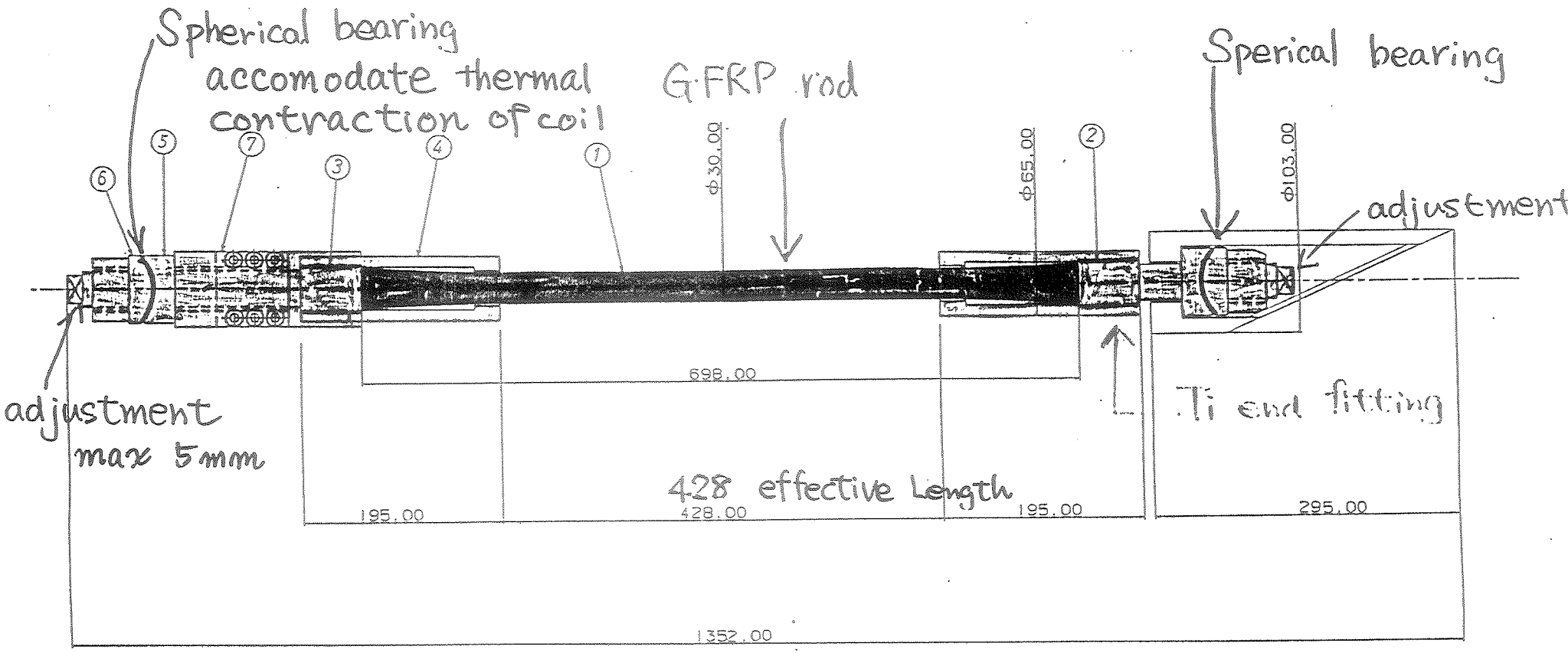

STRUCTURE OF RADIAL SUPPORT

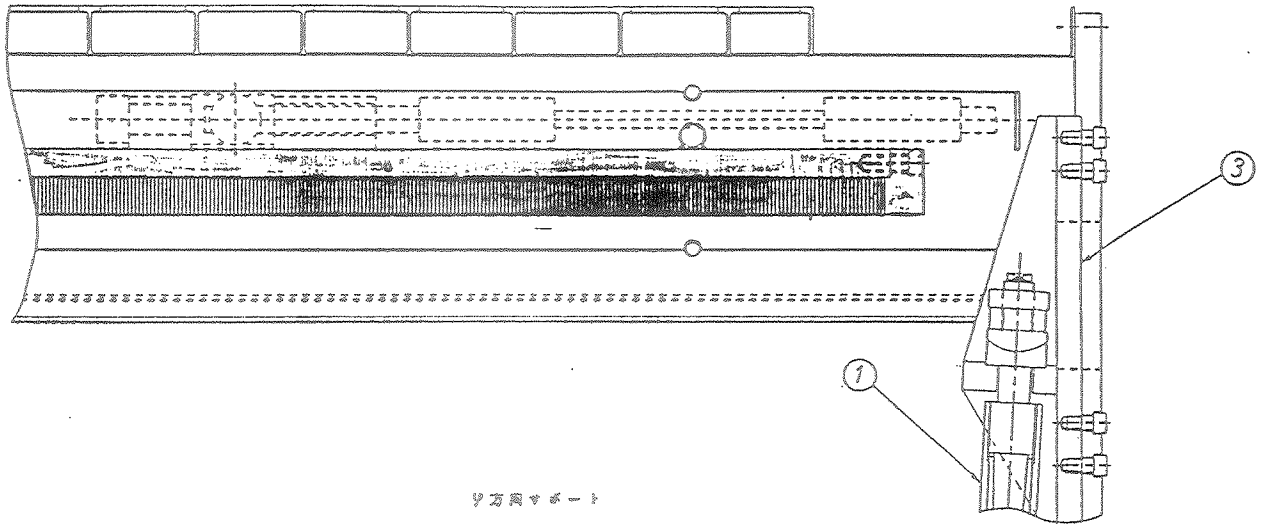

Y方向サポート

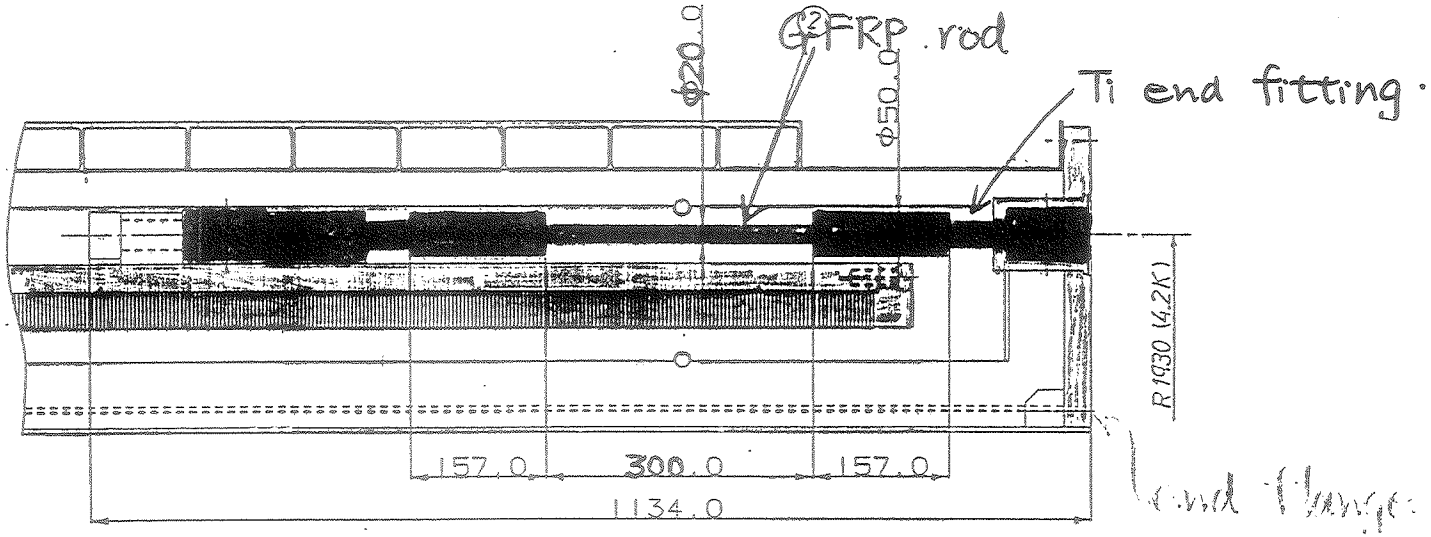

Axial support

Z軸サポート

SUGGESTED SUPPORT SYSTEM

Functional characteristics to check E. stress are allowable for GFRP

Function	Upward (radial rod)	Down ward (radial rod)	Left/Right (radial rod)	For-/Backward (axial rod)
Effective No.	4x sin 30°	4x(1+ sin 30°)	~~8~~ 4x cos 30°	12
Fatigue limit(GFRP)	250 MPa	250 MPa	250 MPa	250 MPa
Effective load	20 tonf	60 tonf	40 tonf	± 40 tonf
per rod	10 tonf	10 tonf	~~5.8~~ 11.6 tonf	3.3 tonf
Effective stress	139 MPa	139 MPa	~~80~~ 160 MPa	104 MPa
E. Stress « Fatigue limit ?	OK	OK	OK	OK
Buckling limit				16~~0~~ 8 tonf
Load « Buckling limit ?				Load = 40 tonf OK

TENSILE TEST RESULT OF SUPPORT ROD

FRP rod ϕ 30 x 200

	Ultimate load	Ultimate tensile strength
R.T.	452 kN	639 MPa
	462 kN	654 MPa
LN_2	551 kN	779 MPa
	543 kN	769 MPa

$E = 4500\ kg/mm^2 = 44\ GPa$

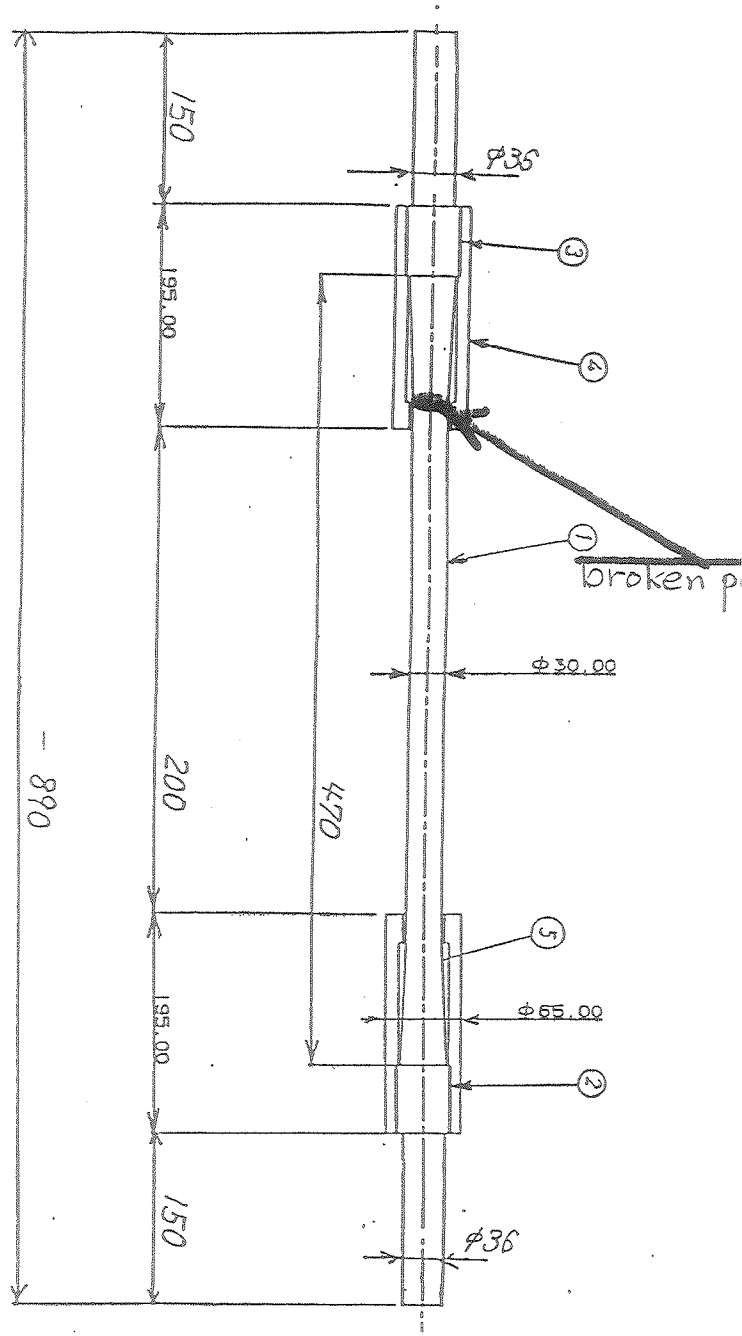

TENSILE TEST RESULT

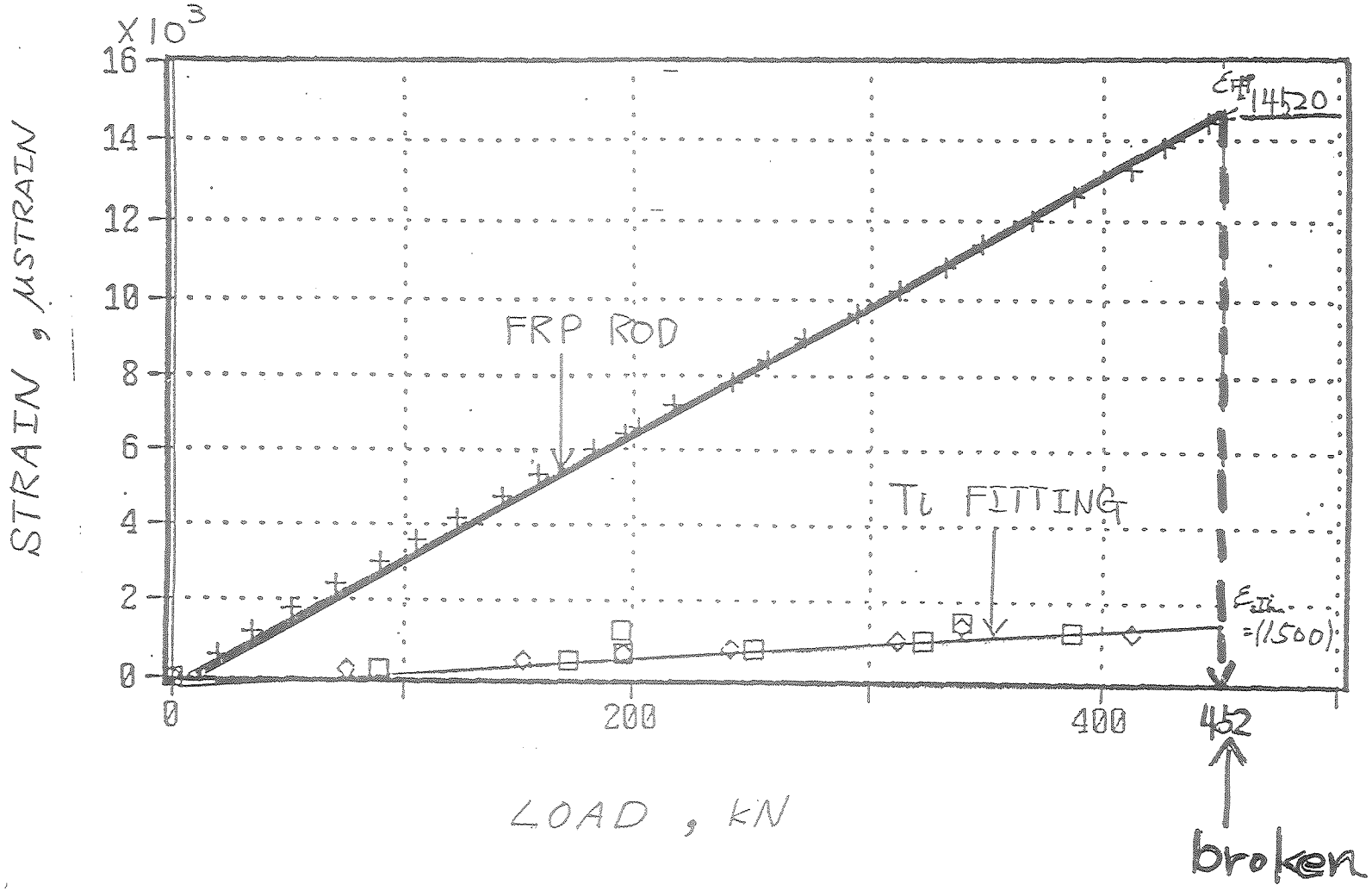

TRANSMISSION OF LOADS TO CALORIMETER

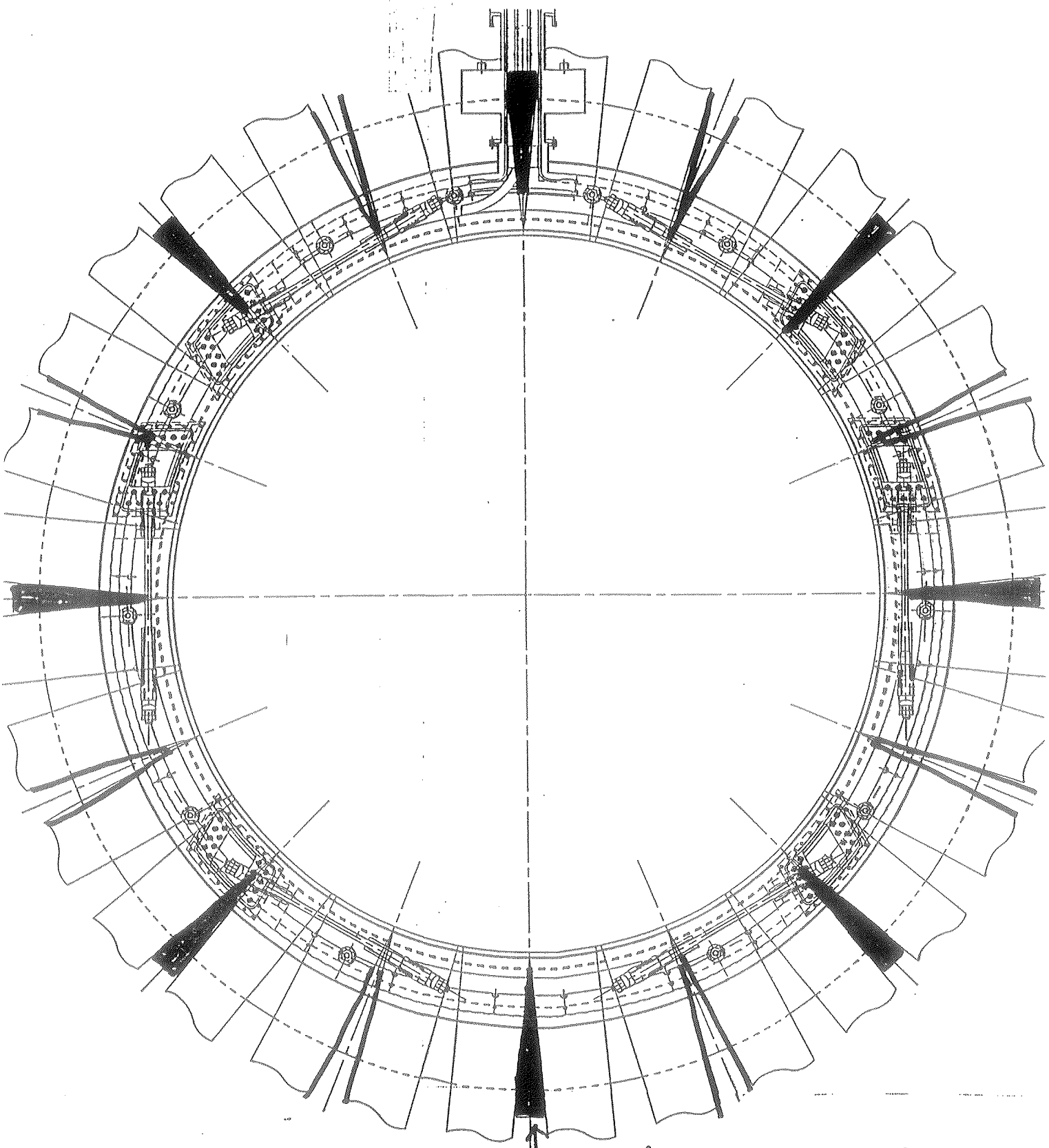

attachment (radial)
allowance 3 mm radial

axial shims adjust
the posision

Date: February 17 and 18, 1992
Place: KEK Main Building meeting room (1st floor, next to Library)

Participants: (to be)
Robert Kephart and Charles Grozis (FNAL)
Taka Kondou, Yoshikuni Doi, Yasuhiro Makida, Hiroshi Yamaoka
Nobuhiro Kimura, Ken-ichi Tanaka and Akira Yamamoto (KEK)
Susumu Mine, Hiroshi Mukai (Toshiba)
Hideo Kakui and Isamu Oono (IHI)

Agenda:

Feb. 17,

11:00 Opening address ..... T. Kondou / A. Yamamoto

11:10 General progress at Fermilab..... R. Kephart

11:20 General progress at KEK ..... A. Yamamoto

11:30 Changing of magnet length and its effect.....Kephart / Yamamoto

11:45 Magnetic force calculation ..... K. Tanaka
R. Kephart / R. Wands

12:15 Lunch break

13:15 Vacuum vessel
Isogrid option .....C, Grozis
Honeycomb option.....H. Yamaoka / I. Oono
Discussion on prototype .. ..all

14:30 Coil and Magnet Supporting:
FNAL option.....C. Grozis
KEK option.....Y. Makida / S.Mukai
Discussion .....all

15:15 Stability and quench analysis,.....Y. Makida

15:45 Chimney design ....A. Yamamoto / C. Grozis

16:15 Cryogenics Scheme..... Y. Doi / A. Yamamoto

16:30 Magnet Installation into the Detecto.....A. Yamamoto

16:45 Summary ..... T. Kondou / A. Yamamoto

17:00 Adjorn

Feb. 18,

---- Fermilab - KEK meeting ------

9:15 Discussions for further work

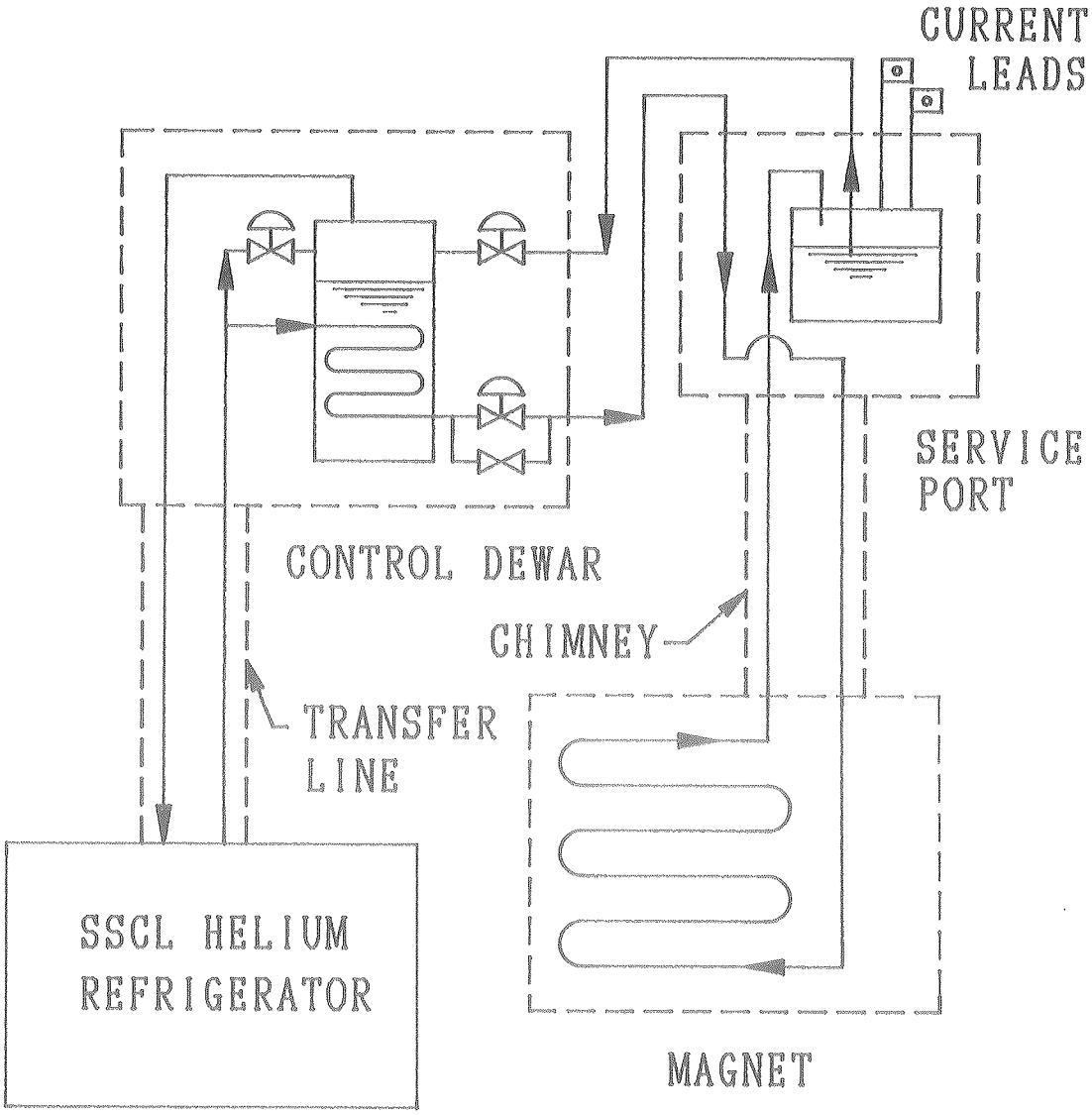
CURRENT
LEADS
SERVICE
PORT
CONTROL DEWAR
CHIMNEY
TRANSFER
LINE
SSCL HELIUM
REFRIGERATOR
MAGNET

Fig. 13

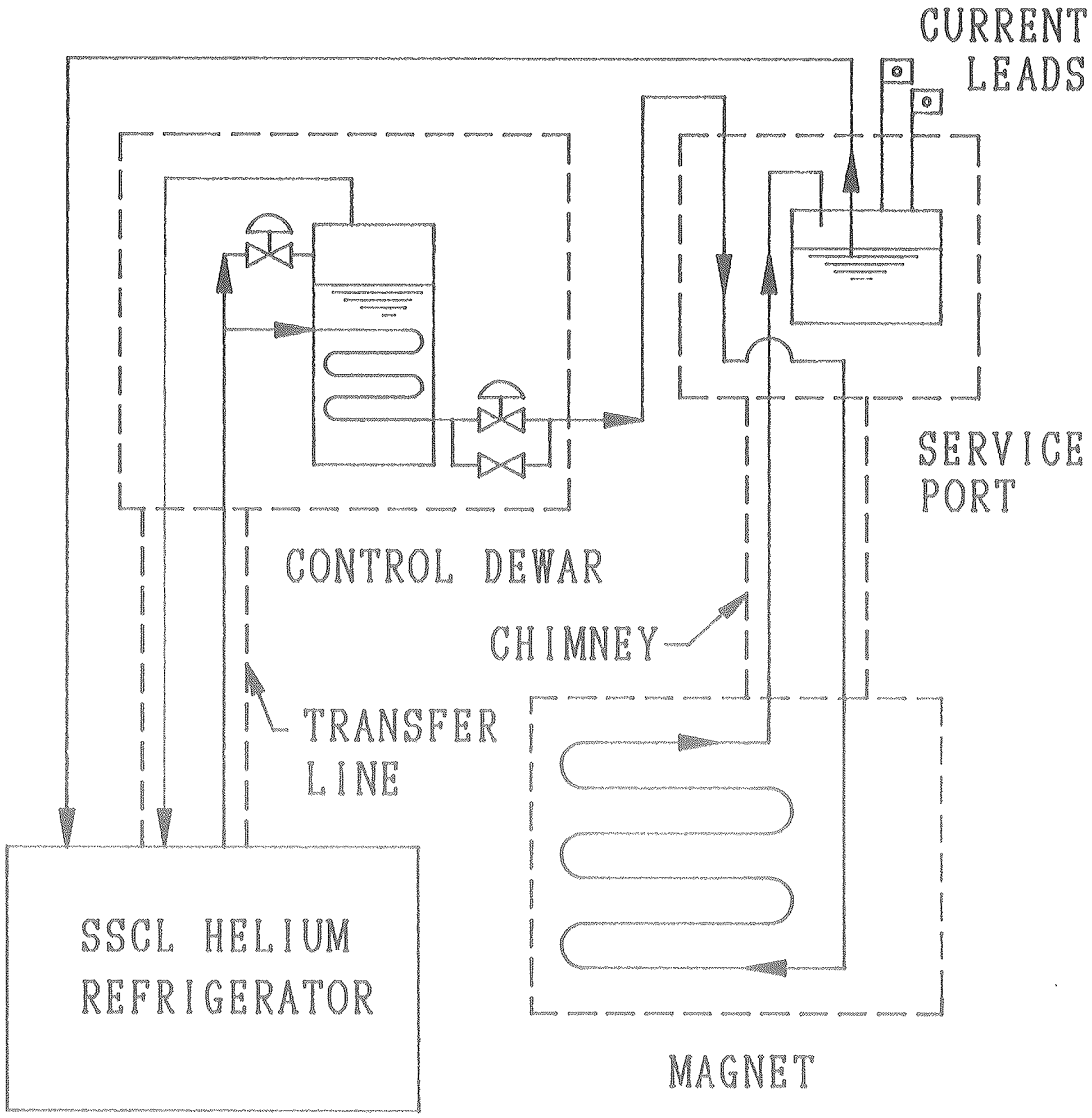
CURRENT
LEADS
SERVICE
PORT
CONTROL DEWAR
CHIMNEY
TRANSFER
LINE
SSCL HELIUM
REFRIGERATOR
MAGNET

Fig. 13

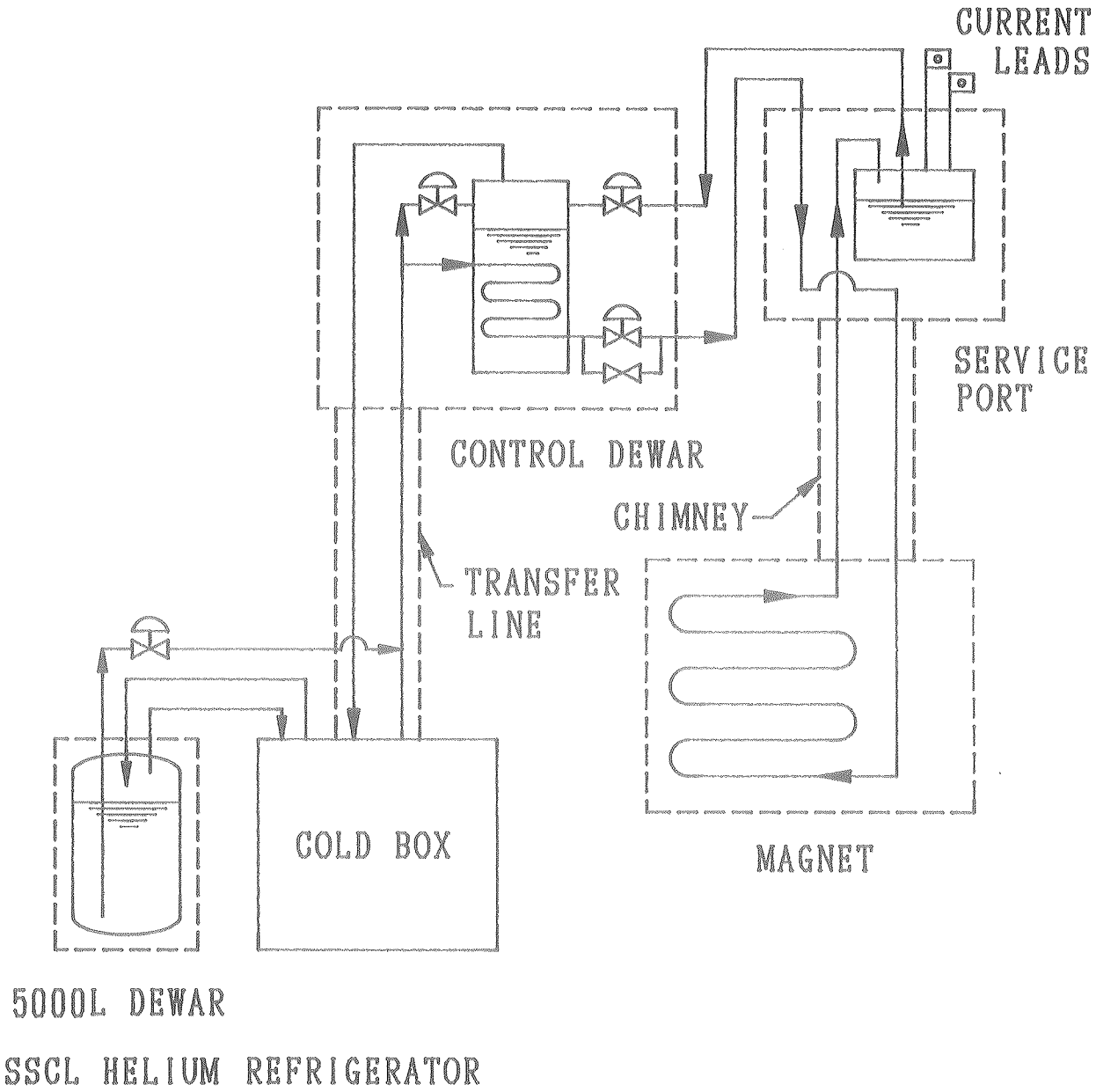
CURRENT
LEADS
SERVICE
PORT
CONTROL DEWAR
CHIMNEY
TRANSFER
LINE
COLD BOX
MAGNET
5000L DEWAR
SSCL HELIUM REFRIGERATOR

Fig. 13