Fermilab

SDC SOLENOID DESIGN NOTE #167

TITLE: Preliminary flow schematic for the helium and nitrogen interface between the solenoid system and the SSCL

AUTHOR: A. M. Stefanik A. Stefanik

DATE: December 2, 1991

DISCUSSION: The solenoid system consists of the solenoid, chimney, service port and control dewar. The nitrogen subcooler will be located outside the control dewar if it is too large to fit inside. The SSCL transfer line terminates in the control dewar. The interconnections are shown on the drawing. A P&I diagram will be developed after the magnet group and SSCL comment on this schematic.

FERMILAB
ENGINEERING NOTE

SECTION	PROJECT	SERIAL-CATEGORY	PAGE
	SDC		1

SUBJECT: HELIUM AND NITROGEN INTERFACE BETWEEN SSCL AND SOLENOID SYSTEMS

NAME: A. STEFANIK

DATE: NOV. 20, 1991
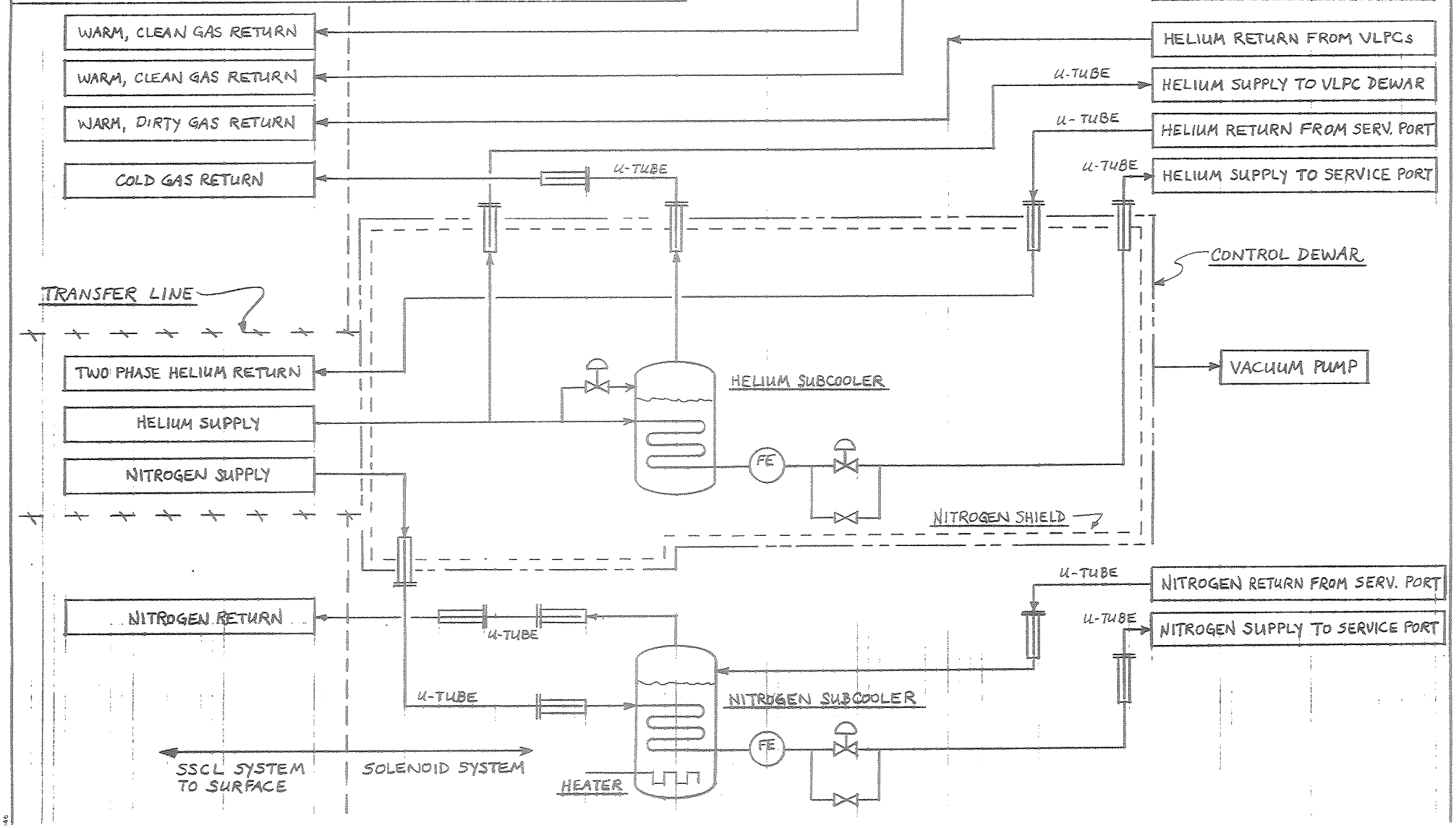
REVISION DATE: