Fermilab

SDC SOLENOID DESIGN NOTE #166

TITLE: Minutes of the SDC Magnet Subgroup Meeting

AUTHOR: Akira Yamamoto

DATE: November 22, 1991

This design note consists of the viewgraphs that Akira Yamamoto presented at the SDC Magnet Subgroup meeting at Fermilab on Nov 7-8, 1991 and the minutes which he took at that meeting. The viewgraphs associated with the design of the detector solenoid are in the front; those for the prototype magnet are at the back.

MINUTES OF THE SDC MAGNET SUBGROUP MEETING

DATE : Nov. 7~8. '91
AT : FERMILAB
ATTENDANTS : R. FAST, B. RICHARDSON, B. KEPHART, J. KREBS,
B. WANDS, R. STANEK, D. FIELD, A. LEE, C. GROZIS,
A. STEPHANIK (FNAL)
H. MUKAI, (TOSHIBA)
A. YAMAMOTO, (KEK)

---

1. DETECTOR (MAIN) MAGNET DESIGN

(1) Impact of re-entrant iron on MAGNET

<u>Recommendation to calorimeter choice</u>

-Iron re-entrant should not get into coil region in Z axis.

important

Z coil end < Z iron pole end

-Reason:
-Axial compressive force is safer than repulsive force in coil.
-Decentering force should be smaller.

(2) Cooling Scheme
-Forced 2f He flow may be better because its less physical space requirements in R direction.

(3) Support
-Three option have been discussed. Two of them (Warren Truss & Separate Functions) are still candidates. Separate Function requires less radical space and smaller thermal loads. Warren Truss may distribute force uniformly. Study will be continued in Prototype Magnet.

(4) Vacuum Wall
-All brazed (Metal) Honeycomb Wall at KEK. It may be a strong candidate for the main magnet.

(5) Dimensions: (Drawings will be brought by T.KONDO)
-It has been reported by A.Y. that. The Magnet could be made in a region of $1750 \leq R \leq 2050$.
-The present Magnet envelope of $1700 < R < 2050$ has been kept. Because of possible Warren Truss support option. And for other un-certainties.

2. TECHNICAL PROPOSAL

-See attached sheet & (an outline given you from KONDO)

-(Zeroth) draft by Nov. 20 → A. YAMAMOTO
-First draft from A.Y. » All by Nov. 29

3. PROTOTYPE

-Vacuum vessel dimensions:

Should be 2060.
RWT.

IR = 1700, OR = 2050

O-ring seal will be applied to inspect the coil after Magnet Test.

-Support

Separate function may be better. Transparency will be checked before decision.

-Schedule plan

Detail discussed

(1). IMPACT OF RE-ENTRANT IRON ON MAGNET.

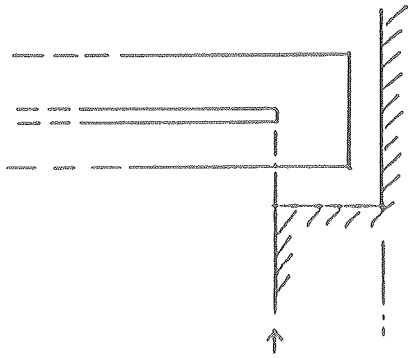

DEFINITION RE-ENTRANT = 0

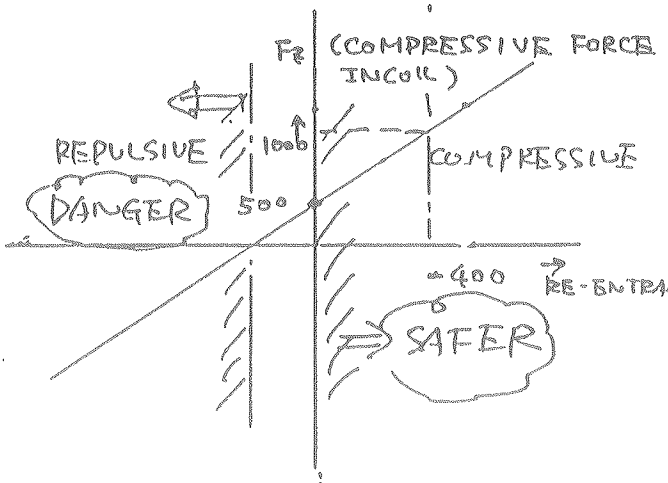

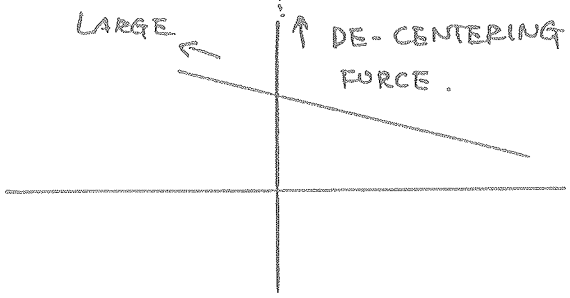

F_z (COMPRESSIVE) SHOULD BE

$F_z > 0$

~~$F_z < 0$~~ WORSE

REPULSIVE FORCE

F_z (COMPRESSIVE) BETTER THAN

F_z (REPULSIVE) BECAUSE

F_z (COMP) MAY BE SELF SUPPORTABLE

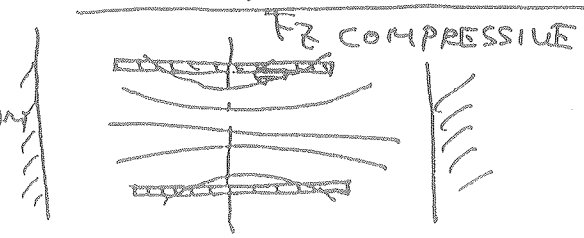

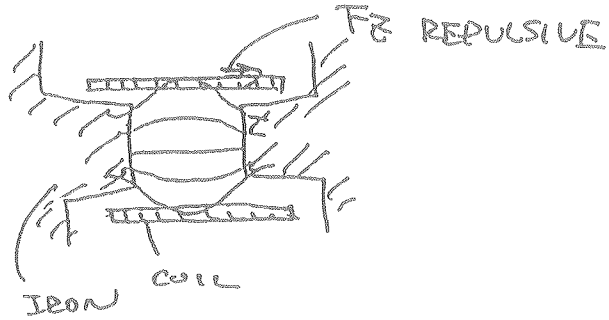

DETECTOR MAGNET

PROGRESS OF DESIGN STUDY AT KEK

COIL

- DIMENSIONS:

  COIL MEAN RADIUS AT 4.2 K = 1850 MM

  WITH VAC SHEL OUTER RAD = 2050 MM

  INN. RAD. = 1750 MM

  - WE MAY CONCLUDE THESE DIMENSIONS TO BE REALIZED.

- B, F_z, DF_z, DF_R IN DESIGN (ASSUMED)

  $B = 2$ T, $F_z = 1700$ Tonf,

  $DF_z = 40$ TONS at $dz = 20$ mm

  $DF_R = 40$ TONS at $dr = 20$ mm

  WE DO PREFER TO HAVE $F_z > 0$ (compressive)

  AND TO ELIMINATE A POSSIBILITY TO HAVE $F_z \leq 0$

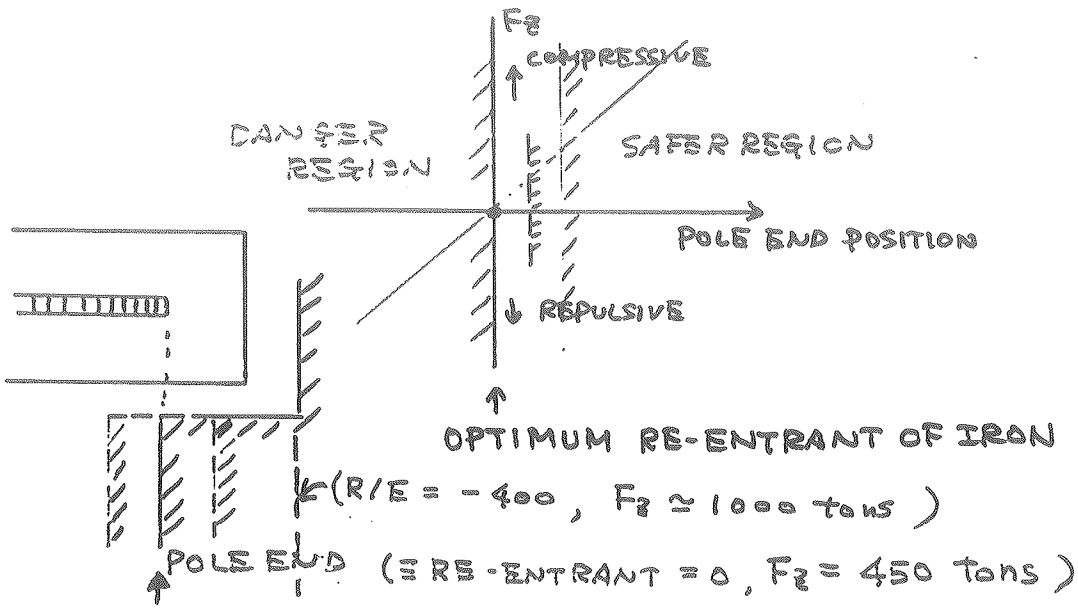

Table 1-2. Basic requirement and boundary conditions

Magnet Envelope	
Cryostat inner radius:	1.75 m
outer radius:	2.05 m
Cryostat half length :	<4.0 m
Stay out zone (radial)	50 mm
Calorimeter boundary	2.10 m
Tracking boundary	1.70 m
Central magnetic field:	2 Tesla
Transparency ($\eta = 0$):	1.2 Xo
Operational environment:	in return yoke or in air
Cool down time	< 2 weeks (14 days)
Quench recovery time	<4 hours

Table 3-2. Transperency of the solenoid.

Element	thick.eq.	Xo	λo
Outer Vac. Wall (Al - H/C)	6 mm	0.066	0.0153
Outer Rad. Shield	2	0.022	0.0051
Outer Support Cylinder	31	0.348	0.0787
Superconductor			
(Al stab)	41.0	0.461	0.1041
(Nb.Ti/Cu)	2.8	0.175	0.0161
(GFRP)	1.0	0.005	0.0002
(Al Strip)	1.0	0.011	0.0025
Inner Rad. Shield	2.0	0.022	0.0051
Inner Vac. Wall	6.0	0.067	0.0152
Super - insulation	2.0	0.007	0.0032
Contingency		0.016	0.0045
		1.200	0.2500

where:

	Xo	λo
Aluminum	89 mm	394 mm
Nb. Ti / Cu	16 mm	174 mm
GFRP	190 mm	530 mm
(CFRP)	(240 mm)	(550 mm)
Mylar(S/I)	287 mm	617 mm

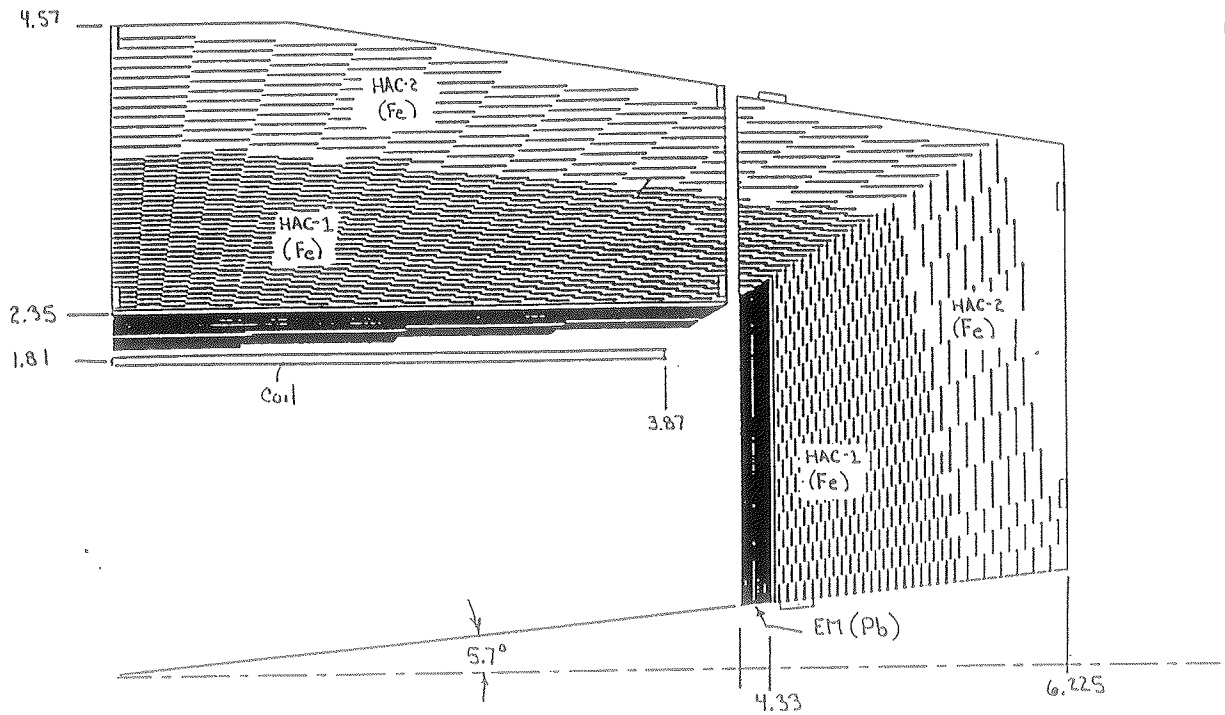

Fig. 1. Iron HAC1 Geometry

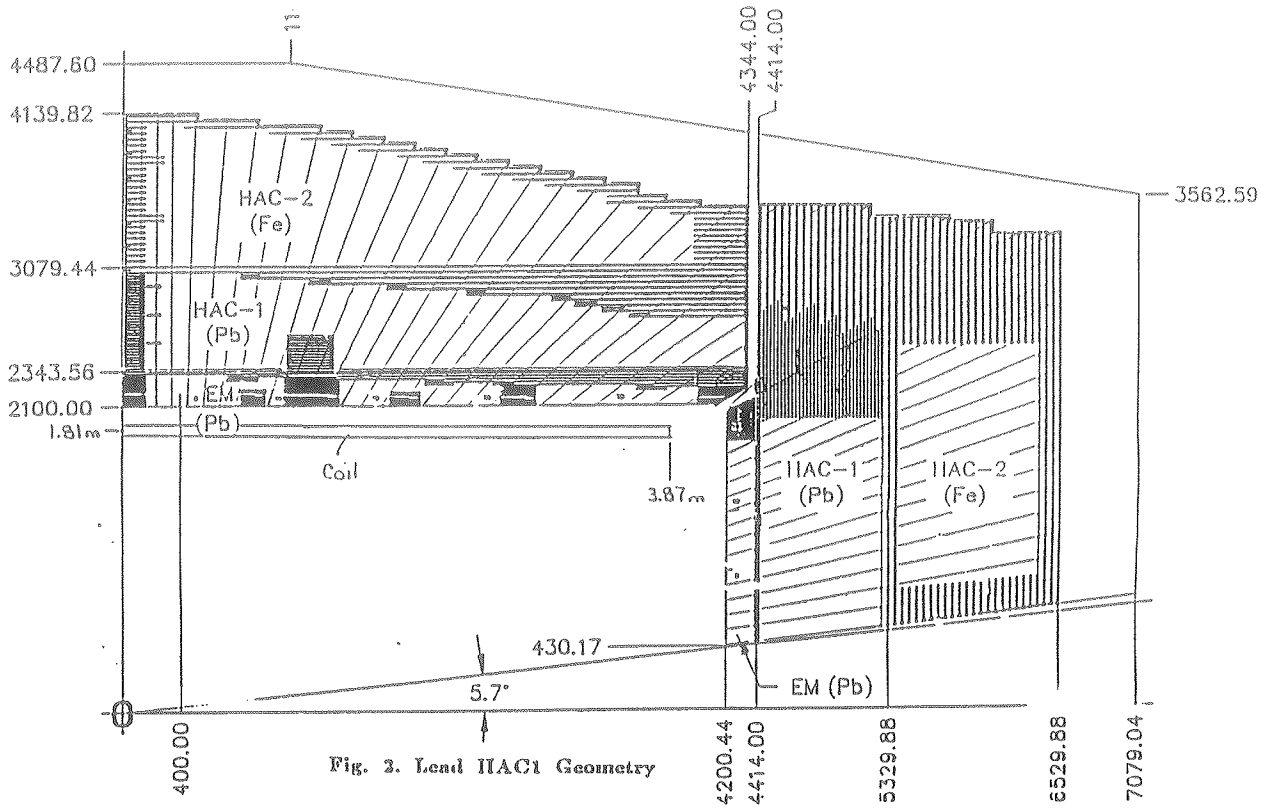

Fig. 2. Lead HAC1 Geometry

Fig 2-1.

Table 3-1. Design parameter of the SDC thin solenoid.

		in air	in iron
Dimensions:			
Cryostat	Inner Radius	1.75 m	
	Outer Radius	2.05 m	
	Half Length	4.0 m	
Coil	Effective Radius	1.85 m	
	Half Length	3.75 m	
	Coil + OSC	44 + 31 mm	
Tracking	Aperture Radius	1.7 m	
	Half Length	4.0 m	
Transparency	Radiation Thickness	1.2 Xo	
	Interaction Length	0.25 λo	
Electrical Parameters			
Central Field		2.0 T	~2.1 T
Int. B. dl	(η=0)	3.4 T.m	3.6 T.m
	(η=1.0)	T.m	
	(η=1.5)	T.m	
Nominal Current		8,000 A	8,000 A
Inductance		4.2 H	4.6
Stored Energy		133 MJ	160 MJ
E/M		7.4 kJ/kg	8.9 kJ/kg
Mechanical Parameters			
Effective Cold Mass		18 tons	
Total Weight		23 tons	
Radial Magnetic Pressure (@z=0)		1.6 MN/m^2	
Axial Total Compressive Force		18 MN	
Superconductor			
Nb.Ti /Cu /Al ratio		0.5 /0.5 /29	
Overall conductor size		4.37 x 4.4 mm^2	
Load Line Ratio (@ 2.2T, 4.2K)		50 %	
RRR of pure Al (@ B=OT)		600	
Yield Strength of pure Al		65 MPa	

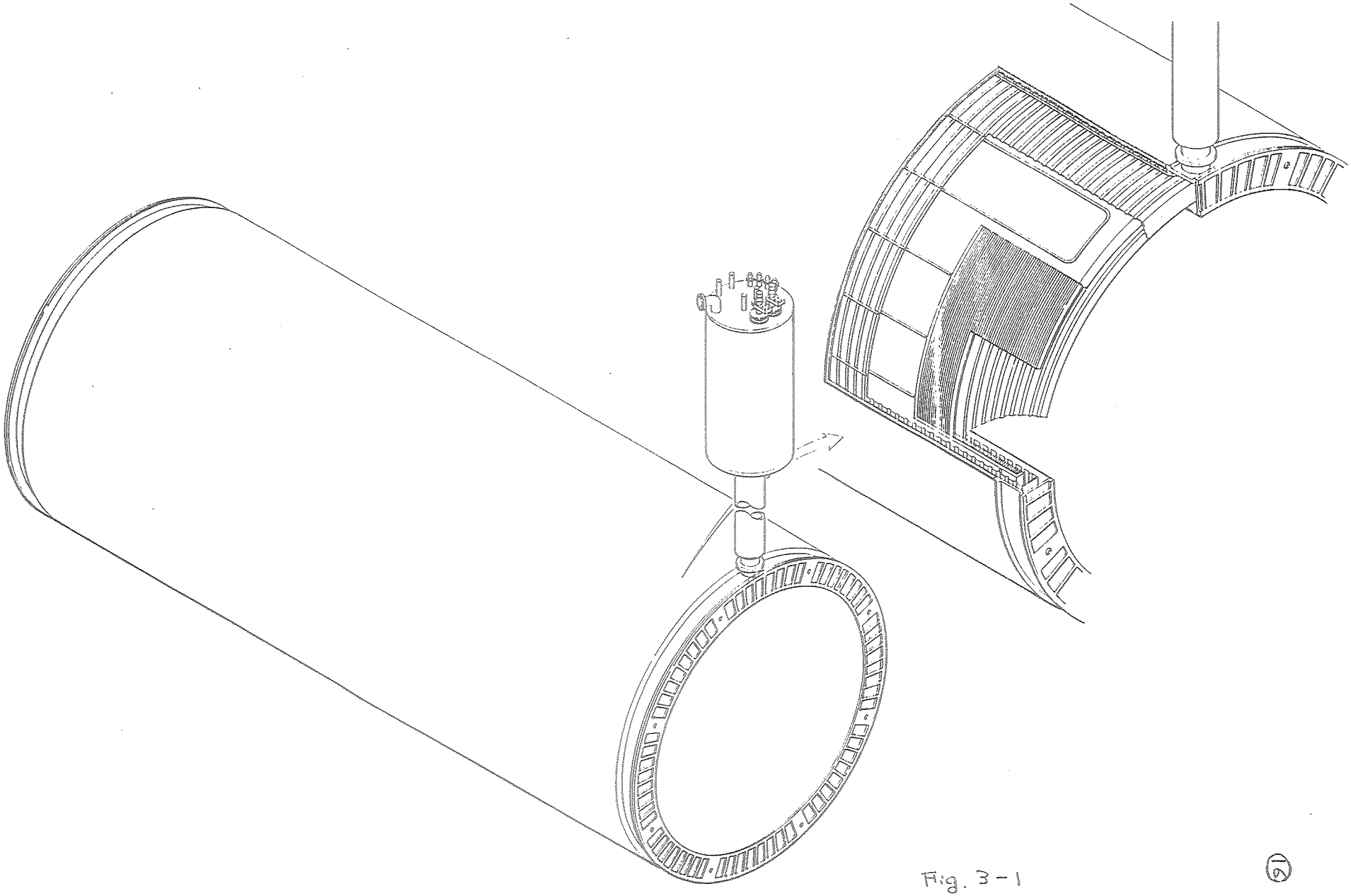

Fig. 3-1

Table 2-1. Field uniformity and electromagnetic forces in various option.

Option	[Unit]	#1	#2	#3	#4	#5	#6
Flux return in		air	iron	iron	iron	iron	iron
Yoke boundary							
R	[m]		3	3	3	3	3
z	[m]		5	4.5	4.05	3.75(nose)	
Field Uniformity	[%]	50%					
B.Int. Uniformity							
Axial force in coil	[MN]	17				0	
Axial force in yoke	[MN]	0	≤ 200	< 200	< 200	17	
Decent. force, r,	[kN/mm]	0				200	
z	[kN/mm]	0				200	

2050

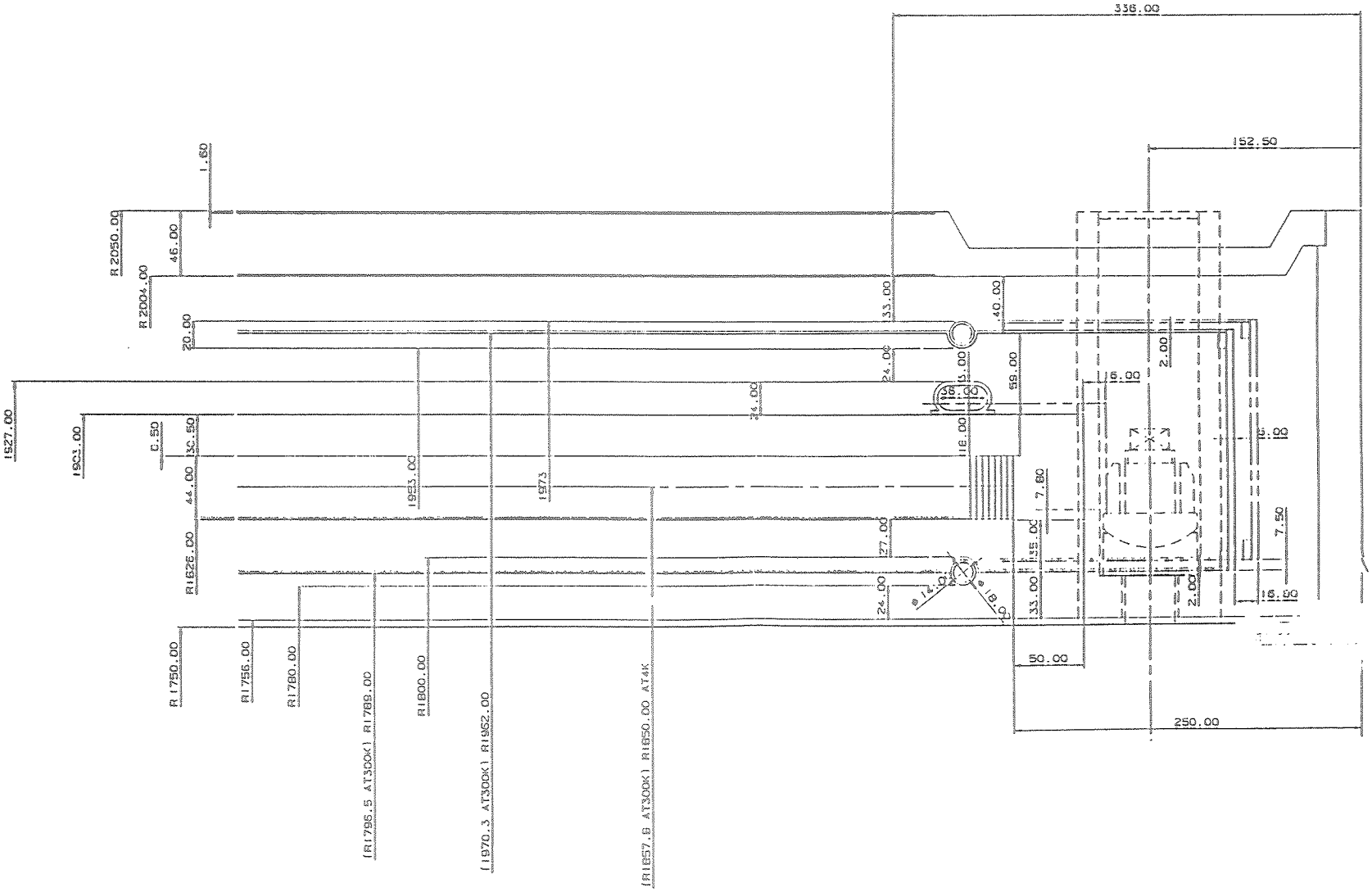
336.00
152.50
250.00
50.00
R 2050.00
R 2004.00
R 1750.00
R 1756.00
R 1780.00
R 1800.00
R 1626.00
1527.00
1903.00
1953.00
1973
(R1796.5 AT300K) R1789.00
(1970.3 AT300K) R1962.00
(R1857.8 AT300K) R1850.00 AT4K
1.60
46.00
20.00
0.50
130.50
44.00
33.00
40.00
24.00
59.00
16.00
2.00
7.80
7.50
27.00
35.00
33.00
16.00
2.00
24.00
24.00
116.00
36.00
15.00
ø14.00
ø18.00

Fig. 3-2.

POSSIBLE CHANGE

→ 1725 MM

→ 50 MM

DIMENSIONS

- CONSENSUS UP TO NOW

- MAGNET ENVELOPE

  IR = 1700 mm

  OR = 2050 mm

- STAYOUT ZONE

  TRACKER TO MAGNET : 25 mm

  CALORIMETER TO MAG. : 50 mm

  TRACKER ≤ 1675

  CALORIMETER ≥ 2100

- BEST EFFORT TO BE MADE

  MAG. I.R AS CLOSE TO 1750 MM AS POSSIBLE.

- PROPOSAL, TODAY.

- WE MAY INCREASE IR TO 1,750 MM WITH KEEPING OR = 2050 MM.

- REASON:

  BASED ON STUDY IN THESE FEW MONTHS, WE MAY BE AVAILABLE TO CONCLUDE IT.

1991.8.30
A. YAMAMOTO

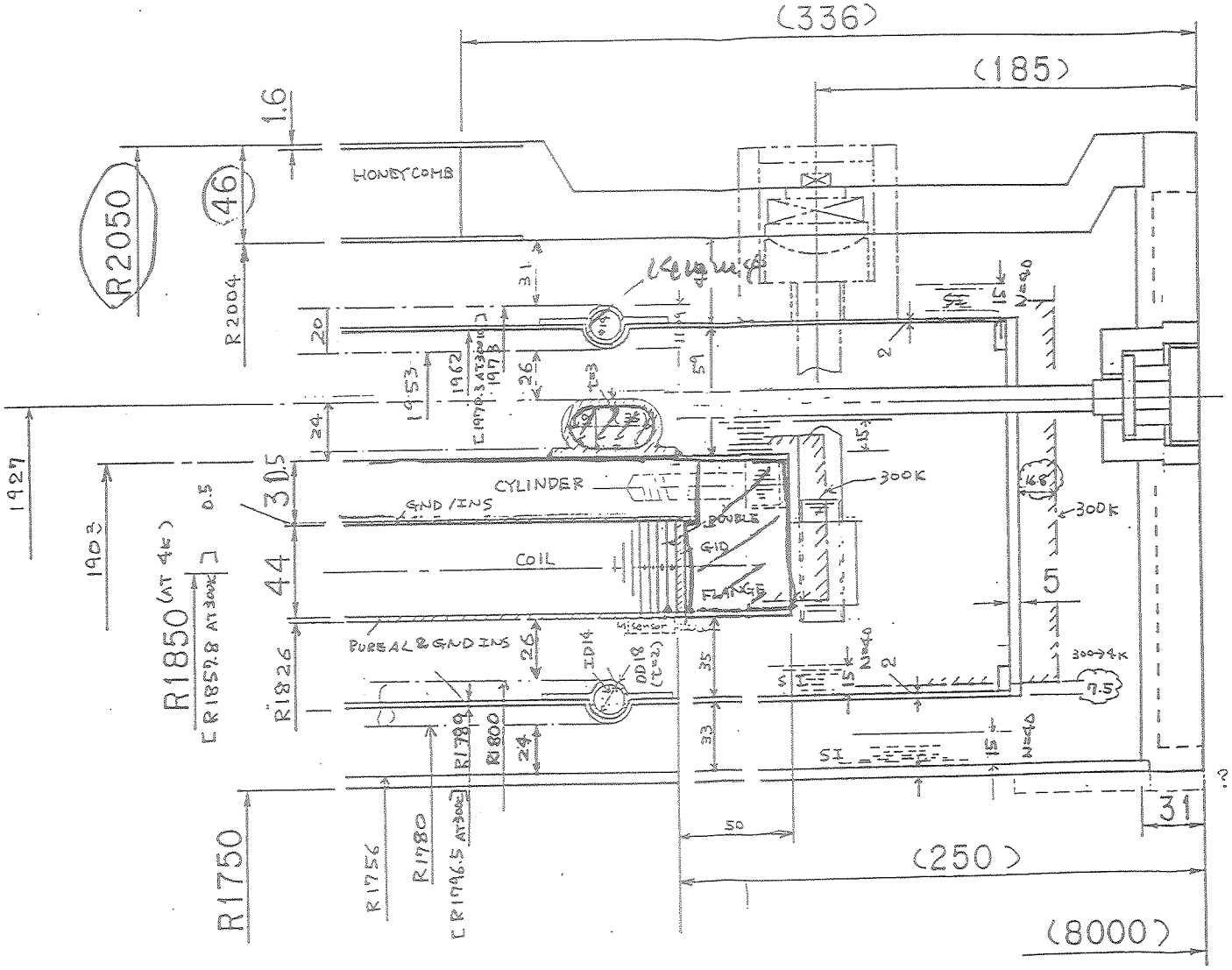

SDC SOLENOID

PROPOSED DIMENSIONS

(COIL AND RAD. SHIELD AT 4K AND 80K)

COOLING OF COIL & RAD. SHIELD

- THERMAL LOAD OF MAGNET

  $\dot{Q}$ (77K → 4.2K) = 30 W

  $\dot{Q}$ (300K → 77K) = 300 W

  LHe (300 → 4.2K) = ~40 l/h

- FORCED 2φ FLOW OR THERMO-SIPHON

  - <u>FORCED 2φ FLOW</u> MAY <u>BE PREFERED</u>

    REASON:

    - PHYSICAL SPACE REQUIREMENT SMALLER.
    - LESS WELDING JOINTS & SIMPLER.
    - WELL ESTABLISHED IN JAPAN / US.

  - GHE COOLING IN RAD. SHIELD POSSIBLE.

    - LHe (2φ) : 18x36 SIZE --- SUFFICIENT
      L=265 m

      (comment by A.S:

      OVAL SHAPE (t=3mm) STILL MECHANICALLY WEAK!)

    - GHE (R/S) : 14 φ ··· SUFFICIENT
      L≒520 m (2x260)

      SINGLE PASS MAY BE POSSIBLE.

- REQUIREMENTS ON CRYOGENICS

  - CAPACITY : TYP. 700 W at 4.2K.
  - DEWAR : ≫ 3000 l (~ 5,000 l)

Table 3-13. Thermal loads in the SDC thin solenoid with the separate function supportis.

Temperature range	[unit]	300K - 77K	77K - 4.2K	300K - Liq.
- Radiation into shield and coil:				
Surface area (coil+chimney)	[m^2]	(200+20)	(200+20)	
Heat flux/unit area (assumed)	[W/m^2]	(2 x 0.5)	(2 x 0.05)	
Heat flux	[W]	220	22	
- Conduction:				
Basic properties				
K-av. of GFRP-U	[W/m.K]	(1.1)	(0.3)	
K-av of SUS	[W/m.K]	(12.6)	(4.44)	
Coil:				
R-phi support rods (30 mmϕ x 428 mm, n=12)	[W]	9.7	0.86	
Z-support rods (18 mmϕ x 600 mm, n=24)	[W]	5.0	0.45	
Radiation shield:				
R-phi support (8)	[W]	0.51		
Z support (4) (10 mmϕ x 300 mm, n=12)	[W]	0.26		
Chimney and servie port:				
Cooling pipes (n=10)	[W]	30	3.5	
- Current leads (2 x 8,000 A)	[l / h]			30
- Contingency	[W]	35	3.1	10
Total thermal load		300 W	30 W	40 l/h

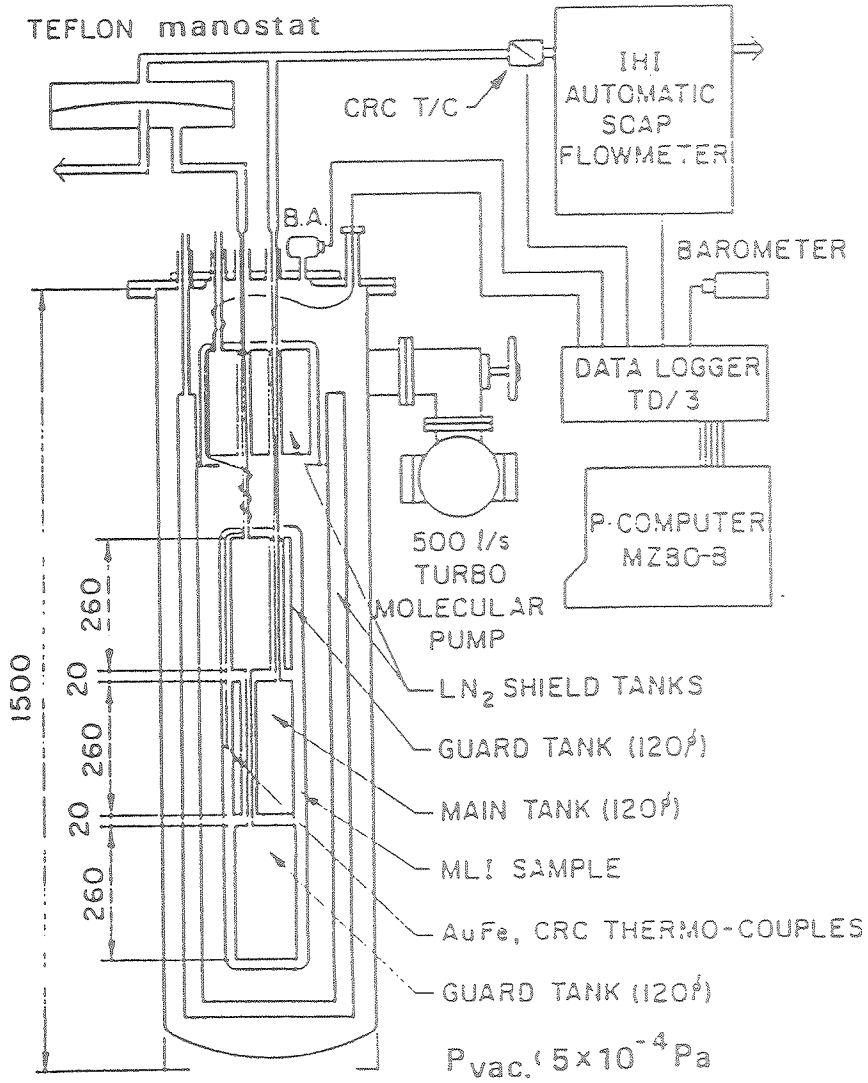

Fig. 7 Experimental arrangement of the cylinderical calorimeter

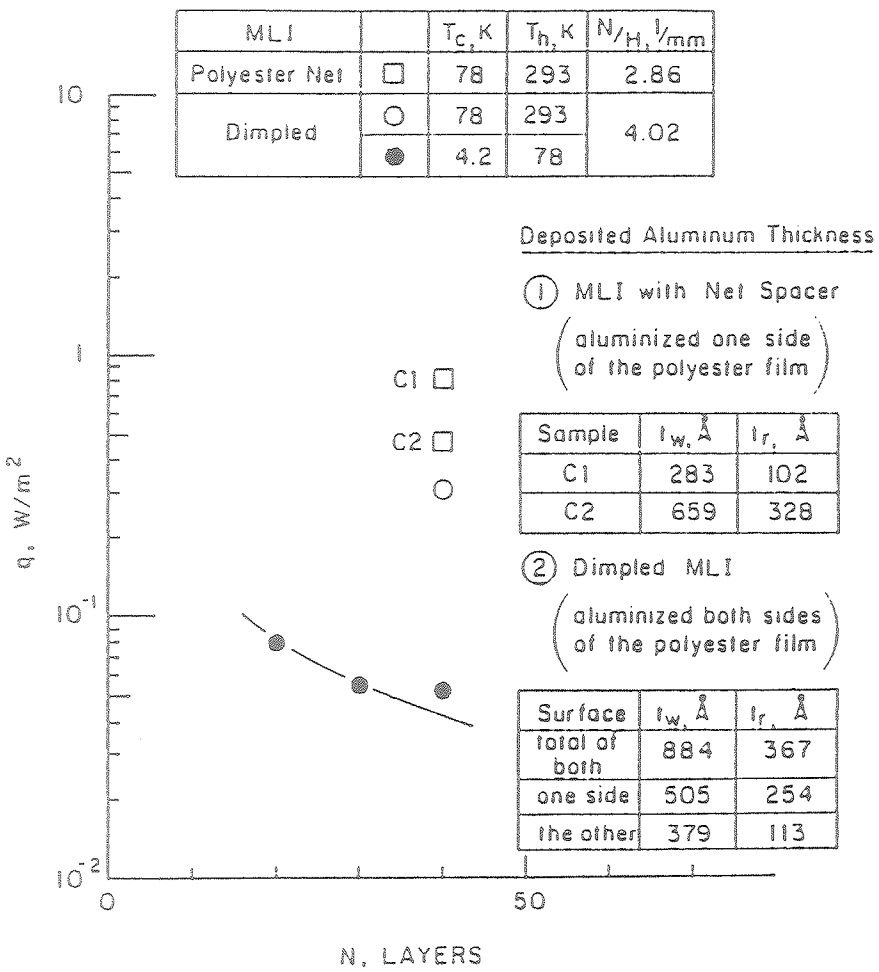

Fig. 8 Thermal insulation performance of dimpled MLI and MLI with net spacers

Table 3-15. Comparison of thermosiphone cooling with forced two phase helium cooling.

	Thermosiphone	Forced 2 ϕ Flow
Cooling Pass	Short & Parallel	Long and Single Pass
Configuration	Complex Larger space	Simple Smaller space
Conductance	Very high	Small or modest
Cooling characteristics:		
Pre-cooling		
Delta. T	smaller	larger
Time period	shorter	longer
Instability	possible	less
Steady Operation		
Stability	Higher	Lower
Operation	Stable	Simple

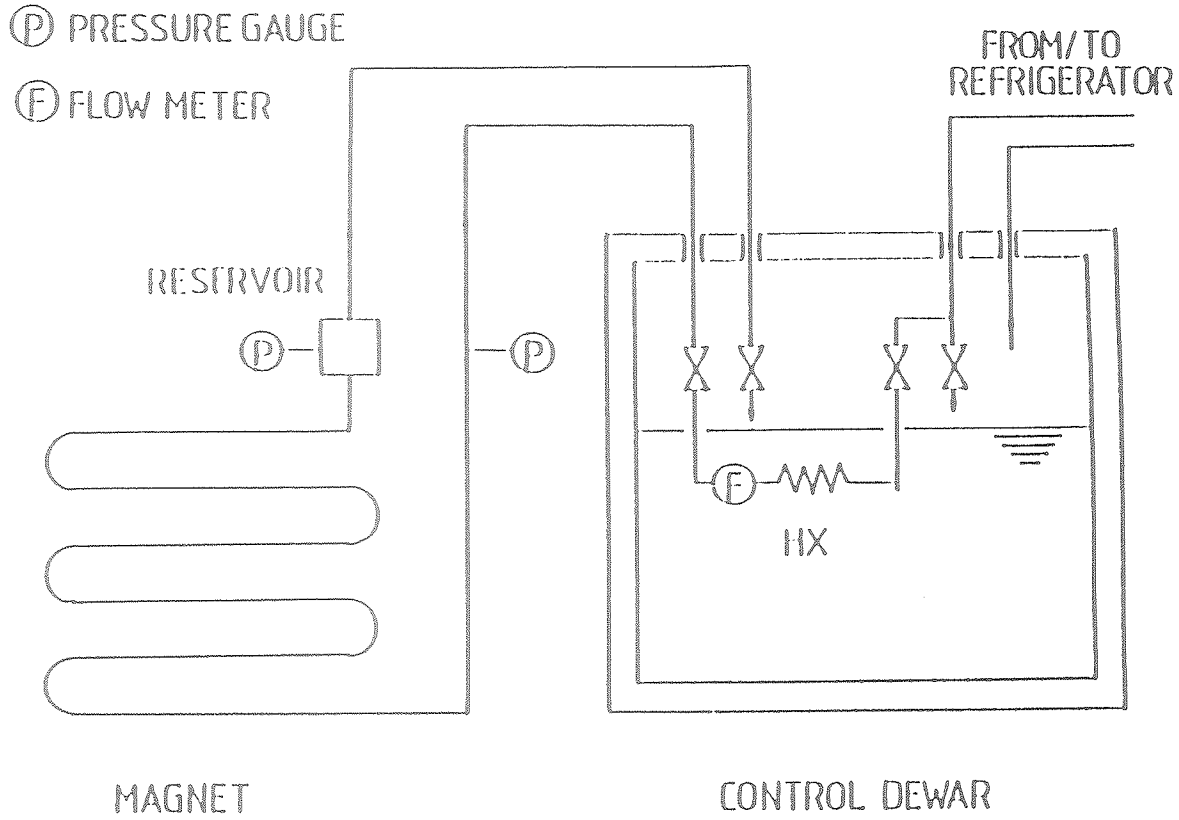

Schematic drawing of the flow diagram between the control D.
and the magnet.

Fig. 5-3

F1 2KN001347 AB SDCコイルレイキャクハイカンズ DL4

MODEL CODE YAD

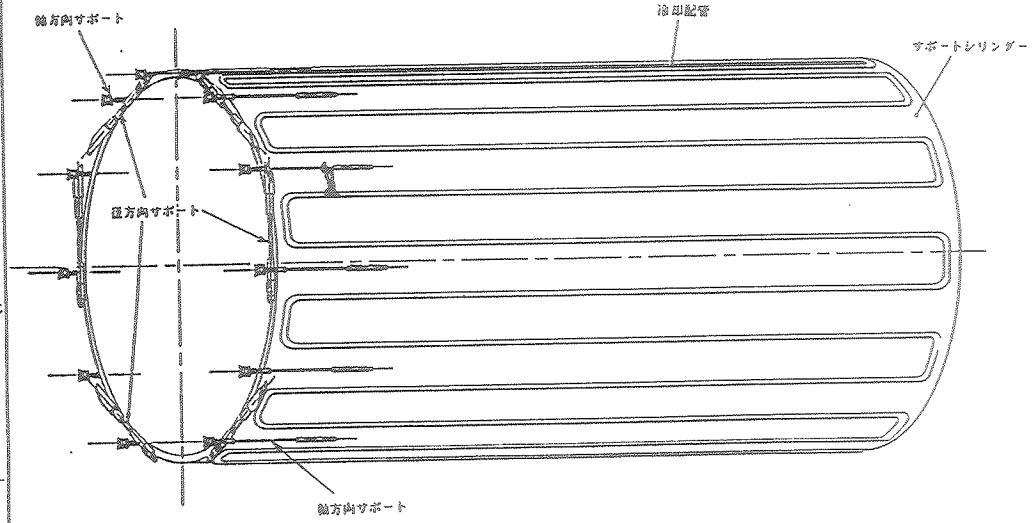

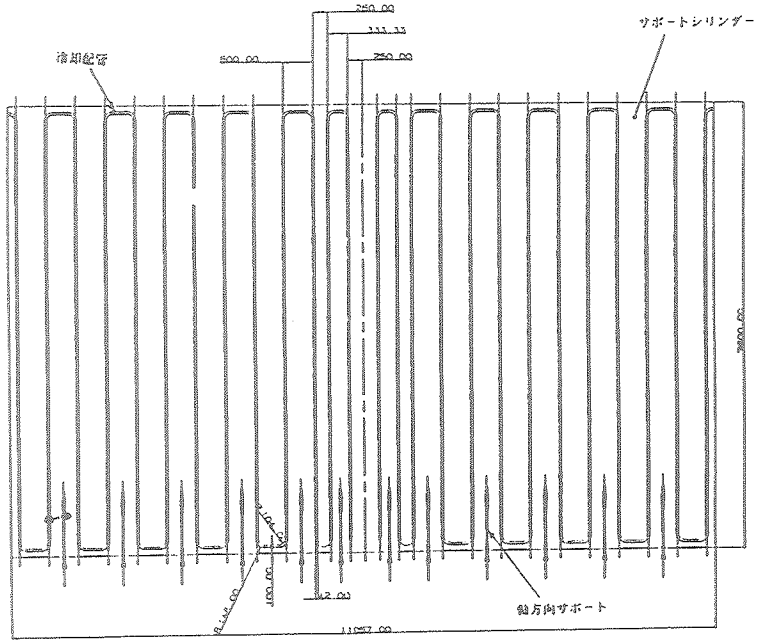

コイル冷却管概略図

承認 APPROVED BY	承認 APPROVED BY 中野 91.10.29	調査 REVIEWED BY 三根 91.10.29	名称 TITLE SDCコイル冷却配管概念図
調査 REVIEWED BY	調査 REVIEWED BY 向 91.10.29	担当 PREPARED BY 山田 91.10.29	高エネルギー物理学研究所殿
担当 PREPARED BY	尺度 SCALE —		図面番号 DRAWING NO. 2KN001347 ⊖
REVISIONS	単位 UNITS mm		REV. MARK A
記号 CONTENTS	株式会社 東芝 TOSHIBA CORPORATION TOKYO JAPAN		
	保管 REGISTERED		配布先

2KN001347 ⊖ A

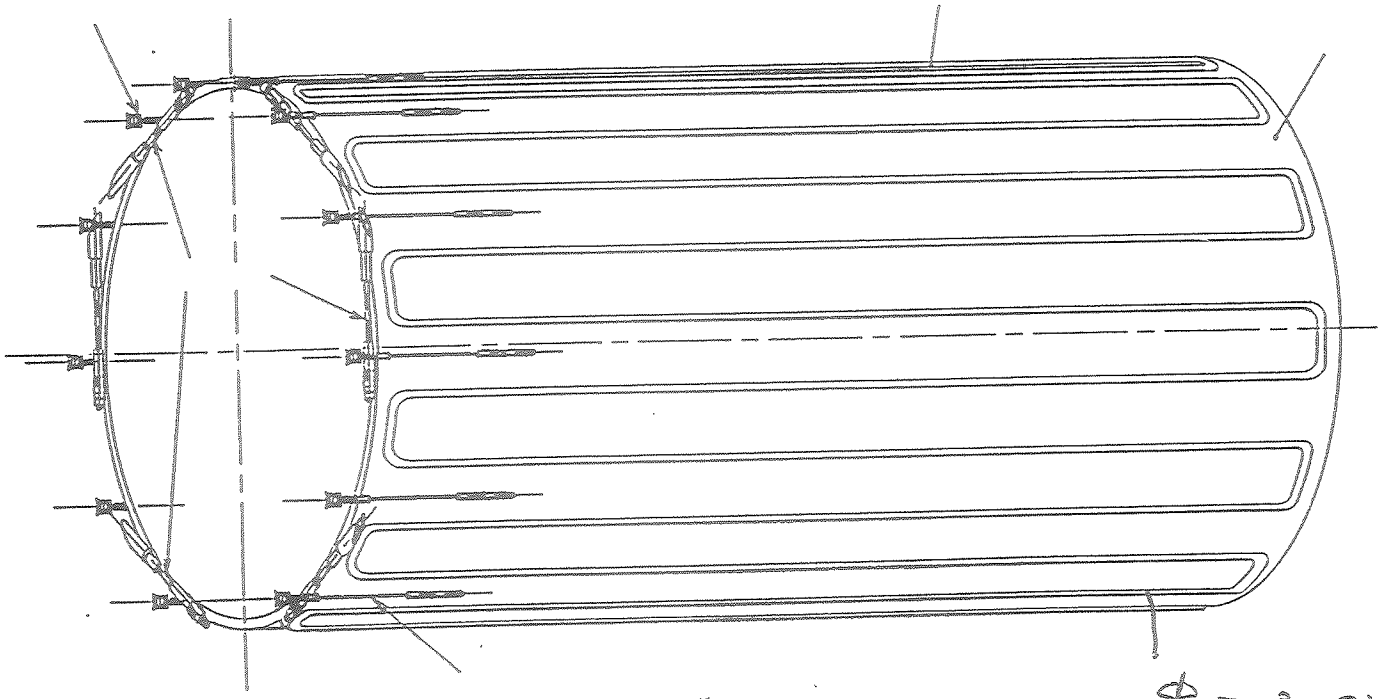

SERPENTINE

$\phi_{ID} = \sim 25\,mm$

$L = 200\,m$

Fig. 3.6

Table 3.14 (a). Cooling design parameters in the initial cool down.

Concepts for cooling of coil and radiation shield;

- Single cryogen of helium, GHe or LHe,
- Indirect forced two-phase helium flow in coil cooling,
- Indirect forced GHe flow in radiation shield cooling,
- Single loop in each pass, coil and shield.

Boundary conditions:

Coil cold mass	(aluminium)	18 tons
Coil (Al) specific heat	(@ 300 K)	0.86 kJ/kg.K
Coil enthalpy	(@ 300 K)	170 kJ/kg
Coil cold mass heat capacity	(300 - 4.2 K)	3.1 GJ
Radiation shield mass	(aluminium)	1 ton
Shield enthalpy difference	(300 - 77 K)	160 kJ/kg
Shield cold mass energy	(300 - 77 K)	160 MJ
Coil and shield cooling time		<14 days
Temerature difference in coil during cool down		< 50 K
Desired temp. difference b/w coil and shield		< 50 K

Initial cooling conditions:

- Coil:

Initial cooling speed		1 K/hr (=2.8E-4 K/s)
Initial heat capacity in coil		15.5.MJ/K
Heat exchange efficiency		0.8
Initial GHe inlet temperature	(Tcoil=300K)	250 K
Initial GHe outlet temperature		290 K
GHe delta-h (enthalopy) b/w 290 -250 K		209 kJ/kg
GHe mass flow required		21 g/s (420 Nm^3/hr)
Initial cooling power		4.4 kW
Cooling time extraporated		195 hr (8,15 days)
Initial inlet pressure		0.7 MPa.A (7 ata)
Pressure drop in cooling pass (25 mmφ.eq.x 265 m)		0.2 MPa

- Radiation shield:

Initial cooling speed		1 K/hr (=2.8E-4 K/s)
Initial heat capacity in radiation shield		860 kJ/K
Heat exchange efficiency		0.8
Initial GHe inlet temperature	(Tcoil=300K)	250 K
Initial GHe outlet temperature		290 K
GHe delta-h (enthalopy) b/w 290 -250 K		209 kJ/kg
GHe mass flow required		1.2 g/s (= 24 Nm^3/hr)
Initial cooling power		250 W
Initial inlet pressure		0.7 MPa.A (7 ata)
Pressure drop in cooling pass (14 mmφ.eq.x 530 m)		< 0.035 MPa

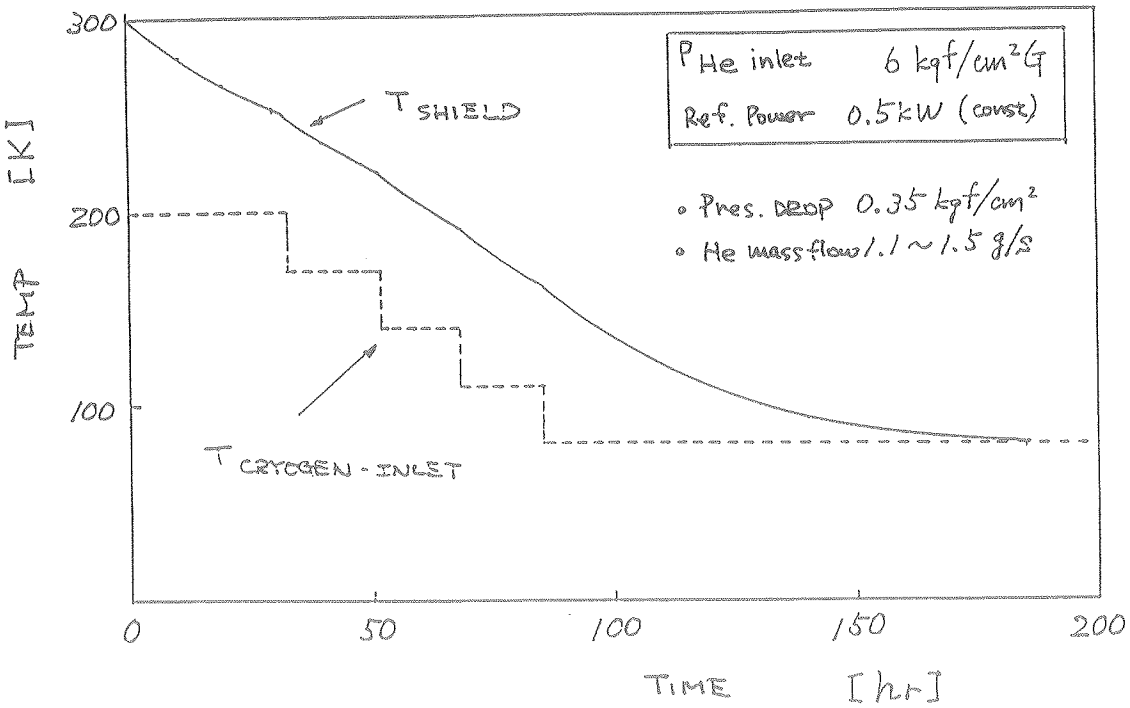
300
200
100
TEMP [K]
P He inlet 6 kgf/cm²G
Ref. Power 0.5kW (const)
• Pres. DROP 0.35 kgf/cm²
• He mass flow 1.1 ~ 1.5 g/s
T SHIELD
T CRYOGEN - INLET
0
50
100
150
200
TIME [hr]

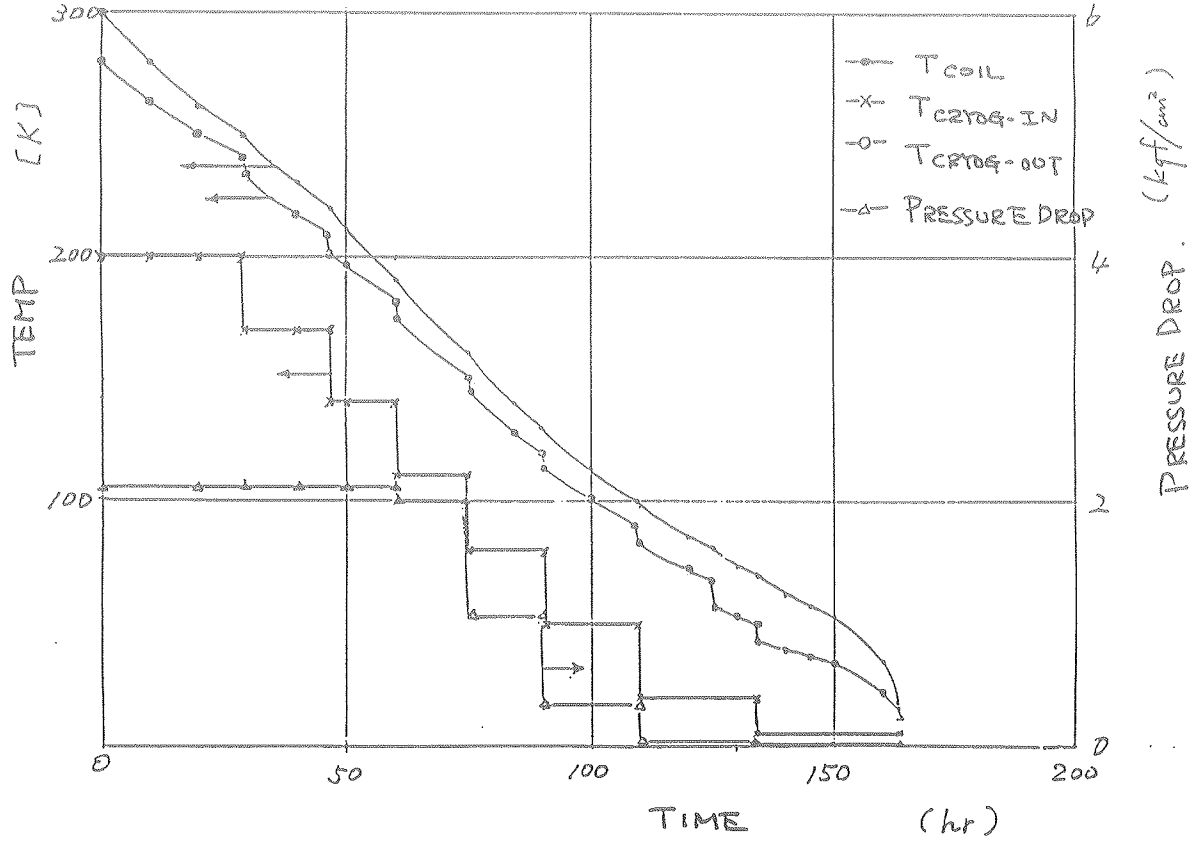
300
200
100
TEMP [K]
T COIL
T CRYOG-IN
T CRYOG-OUT
PRESSURE DROP
6
4
2
0
PRESSURE DROP (kgf/cm²)
0
50
100
150
200
TIME (hr)

Fig 3.14

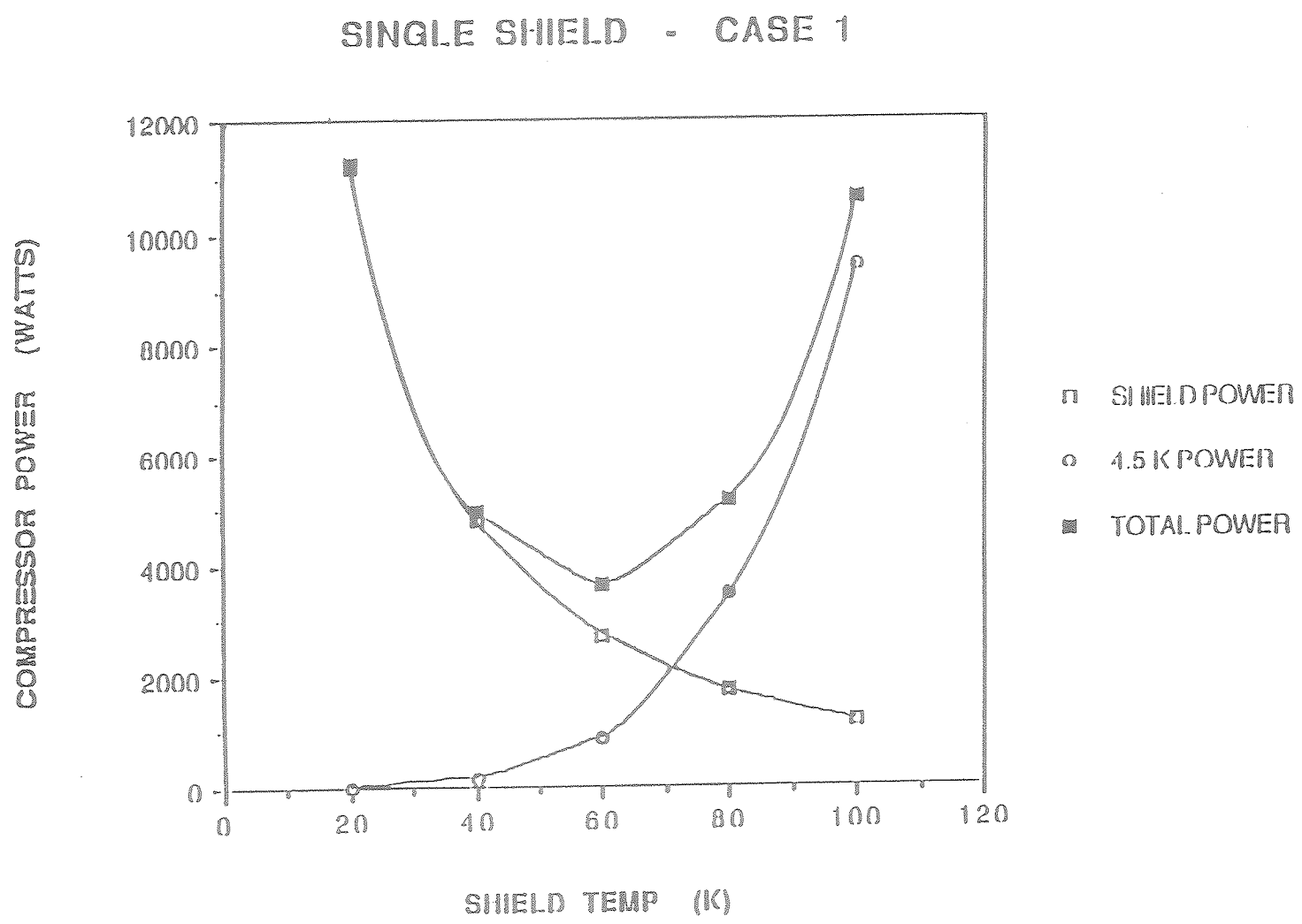
SINGLE SHIELD - CASE 1
COMPRESSOR POWER (WATTS)
12000
10000
8000
6000
4000
2000
0
0
20
40
60
80
100
120
SHIELD TEMP (K)
SHIELD POWER
4.5 K POWER
TOTAL POWER

Fig. 3.15

Table 3.14. (b). Cooling design parameter in steady state operation.

- Coil:	
Heat-in-leakage	30 W
Typical coil temperature	4.4 K
LHe latent heat at 4.4 K, 1.2 ata	19 J/g
Quality of two phase helium; inlet	0.8
outlet	0.5
He mass flow required	5.3 g/s (106 NM^3/hr)
Pressure drop in cooling pass	negrigibly small
- Radiation shield	
Heat-in-leakage	300 W
Max. shield temperature	< 70 K
GHe specific heat	5.23 kJ/kg.K
Inlet He gas temperature	60 K
Temperature difference allowed	5 K
Cooling capacity in unit mass	26.kJ/kg
Helium gas mass flow reruired	12 g/s (=240 Nm^3/h)
Heat exchange efficiency	0.5
Temperature difference in shield	<10 K
Pressure drop in cooling pass	???(need calculation)

Table 3.14 (c) Cooling design parameters in excitation and in recovery after quench.

Excitation in coil		
Static heat-in-leakage		30 W
Eddy current loss in support cylinder (@ 1 mT/s)		80 W
LHe latent heat at 4.4 K, 1.2 ata		19 J/g
Quality of two phase helium;	inlet	0.8
	outlet	0.5
He mass flow into ccolin pass required		19.4 g/s (389 NM^3/hr)
He mass flow into current leads	(2 x 8,000A)	1 g/s (30 l/h)
Quench recovery in coil:		
Maximum pressure rise in cooling pipe		to be studied.
Energy dumped into coil		80 MJ
Coil temperature after quench :	peak	82 K
	average	65 K
Coil enthalpy		4.5 kJ/kg
Recovery time assumed		4 hr
Cooling power required		5.6 kW
Inlet helium condition		LHe with X=0.8
Cooling efficiency assumed		0.8
Liq. (two phase) helium inlet flow required		25 g/s (= 750 l/h liq.)
Total liq. helium consumption for recovering		3,000 l

Table 5-1. Requirments on the SDC cryogenics

General requirements:		
Refrigerator: (Typically : 700 W at 4.4K)		
Refrigeration capacity	(@ 300 K)	5000 W ?????
	(@ 60 K)	500 W and
	(@ 4.2 K)	600 W or 450 W + 50 l/h
Total mass flow capacity in compressor		100 g/s (=2000 Nm^3/hr)
Mass flow capacity into magnet shield line		
Helium gas recovery capacity		
Purification capacity		
Control dewar:		
Liq. He resouvior capacity		5,000 l
Heat exchanger capacity		???
Thermal load	(@ 4.2 K)	???
	(@ 60 K)	???
Transfer lines:		
Length		
Thermal load		
Magnet thermal load condition (typical)		
- Initial cool down		
Mass flow		
Pressure head		
- Steady state condition		
Mass flow capacity		25 g/s (=500 Nm^3/hr)
Inlet quality		
- Excitation		
Mass flow capacity		
- Quench recovery		
Mass flow capacity		
Liq. helium consumption		

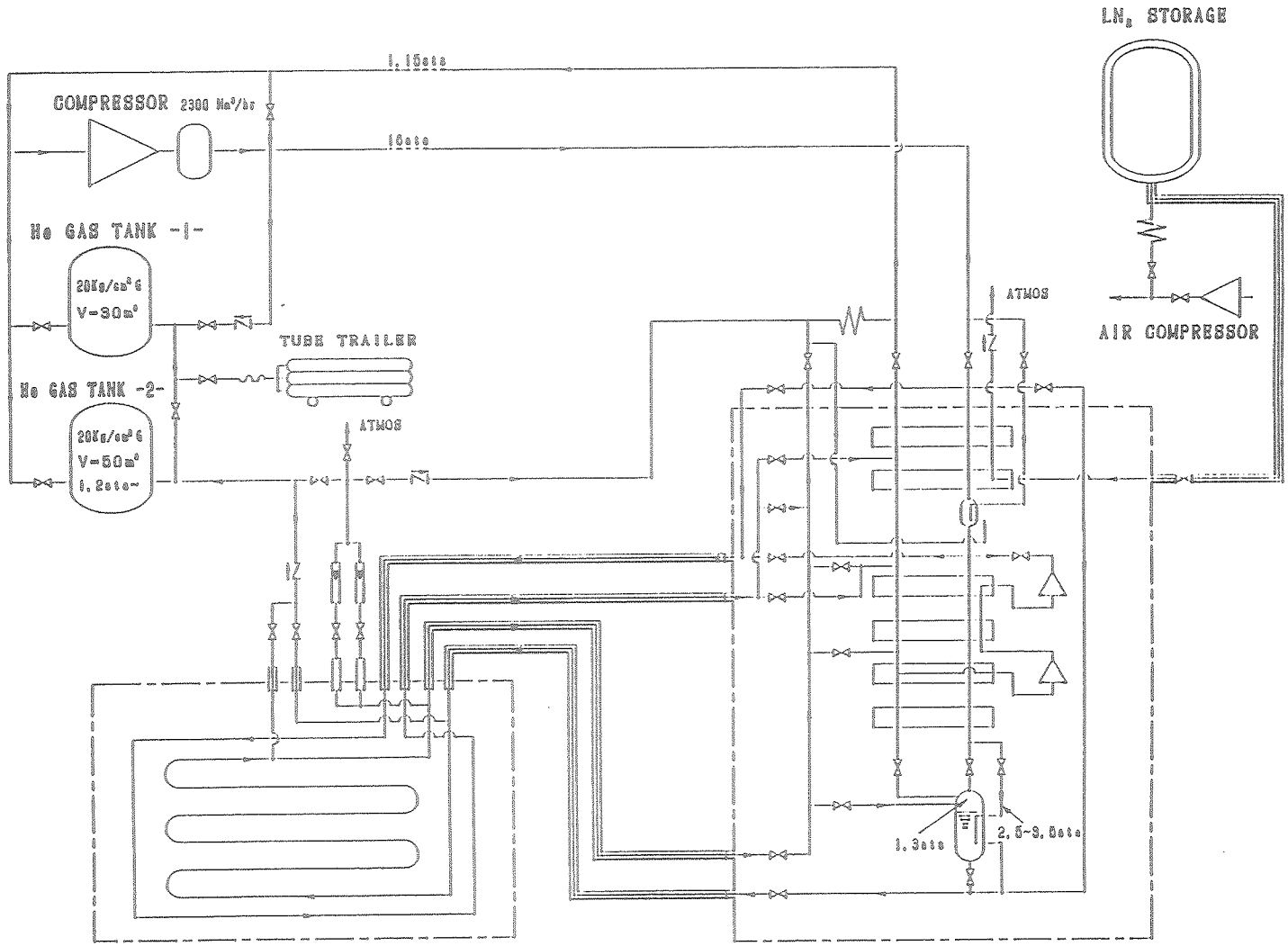

Nov. 1 1991
KEK

Cryogenic System of the SDC Magnet
(Twophase forced flow cooling)

Fig. 5-1.

COLD MASS SUPPORT

- DESIGN STUDY OF SEPARATE FUNCTION SYSTEM BEING CARRIED OUT
  GFRP TENSION RODS

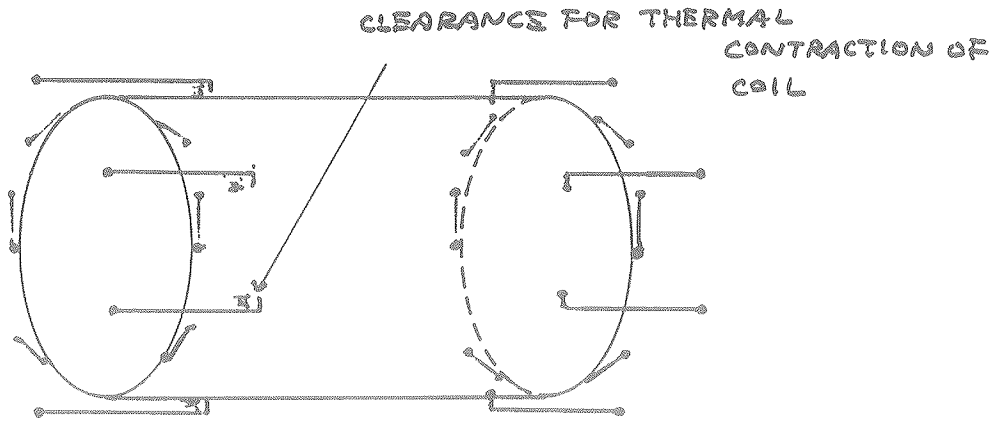

$$\begin{cases} N_{R-\varphi} = 2 \times 6 = 12 \\ N_z = 2 \times 12 = 24 \end{cases}$$

ADVANTAGES

- VERY SIMPLE
- ALL TENSION BASED DESIGN
- MAY BE RADIAL SPACE SMALLER
- MAY BE SMALLER HEAT-IN-LEAKAGE.
- MIGHT BE SMALLER MATERIAL.

SUBJECTS TO BE SOLVED

- MAY DF_z BE TRANSPORTED TO EITHER VAC. END BULK HEAD?
- ATTACHMENT TO BULKHEAD FOR ALL RODS POSSIBLE?

Table 3-10 Fundamental properties of uniaxial GFRP rods for the SDC solenoid.

Item		Properties
Configuration		Circular rod
Material		Uniaxial GFRP
Resin content		18 %
Density		2.2 g/cm^3
Ultimate tensile strength	(@300 K)	> 1000 MPa
Tensile Young's modulus	(@300 K)	> 40 GPa
Bending strength	(@300 K)	> 950 Mpa
Sharing strength	(@300 K)	> 55 MPa
Thermal contraction	(297 K to 77 K)	0.12 %
Av.thermal conductivity	(297 K to 77 K)	1.1 W/m.K
	(77 K to 4.2 K)	(0.15 W/m.K)

Table 3-9. Technical comparisons of the coil support system.

Item	Warren truss	Separate function
Boundary conditions:		
Self weight in coil	< 20 tonf	< 20 tonf
Radial (r-phi) decent. force	< 40 tonf	< 40 tonf
Axial (z)decnt. force	< 40 tonf	< 40 tonf
Configuration	Combined function in r-phi, z axes.	Idividual function in each r-phi, z axis
Material	CFRP(?)	Uniaxial-GFRP
# of support rods	2 x 28	2 x 6 (in phi axis) 2 x12 (in z axis)
Features:		
Configuration	Symmetric	Very simple
Force distribution	Uniform but in 3D	Concentrated but in 1D
Thermal load (Temperature distn. HOT SPOT)		smaller
Radial space requirement in cryostat.	Larger	Smaller
Axial space requirement in cryostat	Smaller	Larger

Table 3-11. Design characteristics of the seperate function coil support system.

Function		Upward	Downward	Left/Right	For/Backward
Global Force					
Coil weight	[ton]	-20	20		
Decent. force in max.	[ton]	40	40	40	40
Effective load	[ton]	20	60	40	40
Mag-spring const	[ton/mm]	2	2	2	2
Support tension rod					
Material		GFRP-U	GFRP-U	GFRP-U	GFRP-U
Allowable stress	[MPa]	250	250	250	250
Diameter	[mm]	30	30	30	18
Length	[mm]	428	428	428	600
Young's mod.	[GPa]	40	40	40	40
# rods effective.		4 x sin30'	4	4 x cos30'	12
Effect.Spring const.	[ton/mm]	13	26	23	20
Force / rod	[ton]	10	15	8.6	3.3
Stress	[MPa]	138	218	119	130
Heat-in-leakage to 4K	[mw/rod]	40	40	40	9.4

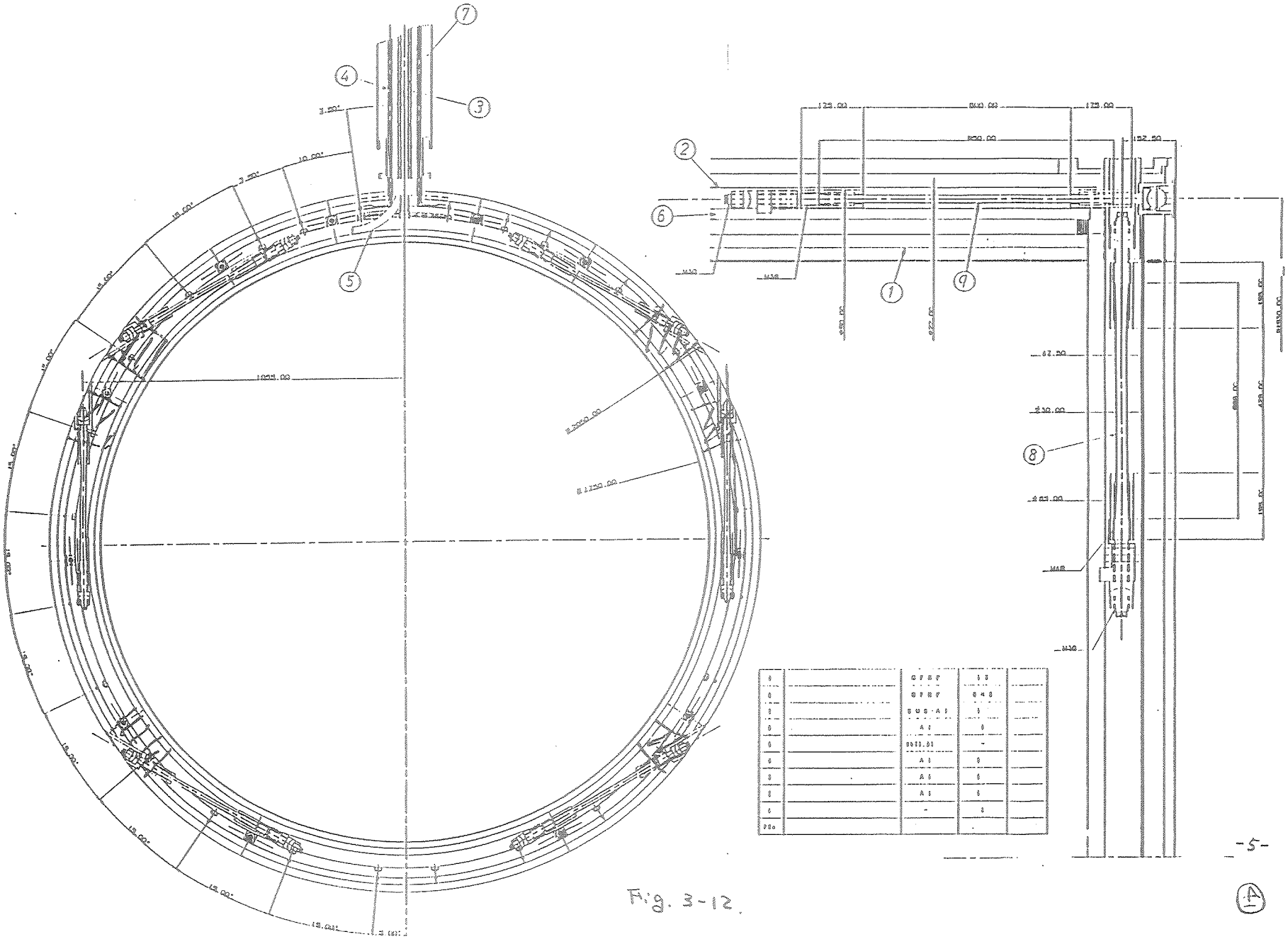

Fig. 3-12.

A

F1 1KN001049 "ABSDCジクサポートショウサイズ" BLW 1

11	軸付金具	SUS	13	
10	軸面ナット押え	SUS	13	
9	軸面ナット 3	SUS	13	
8	軸面ナット 2	SUS	13	
7	軸面ナット 1	SUS	13	
6	軸面座 2	SUS	13	
5	軸面座 1	SUS	13	
4	マイート支持金具	SUS	34	
3	ケクンエタッチ	TI金金	13	
2	ケクンエタッチ	TI金金	13	
1	2方向サポート	GFRP	13	φ30×600
No	名称	材質	数量	備考

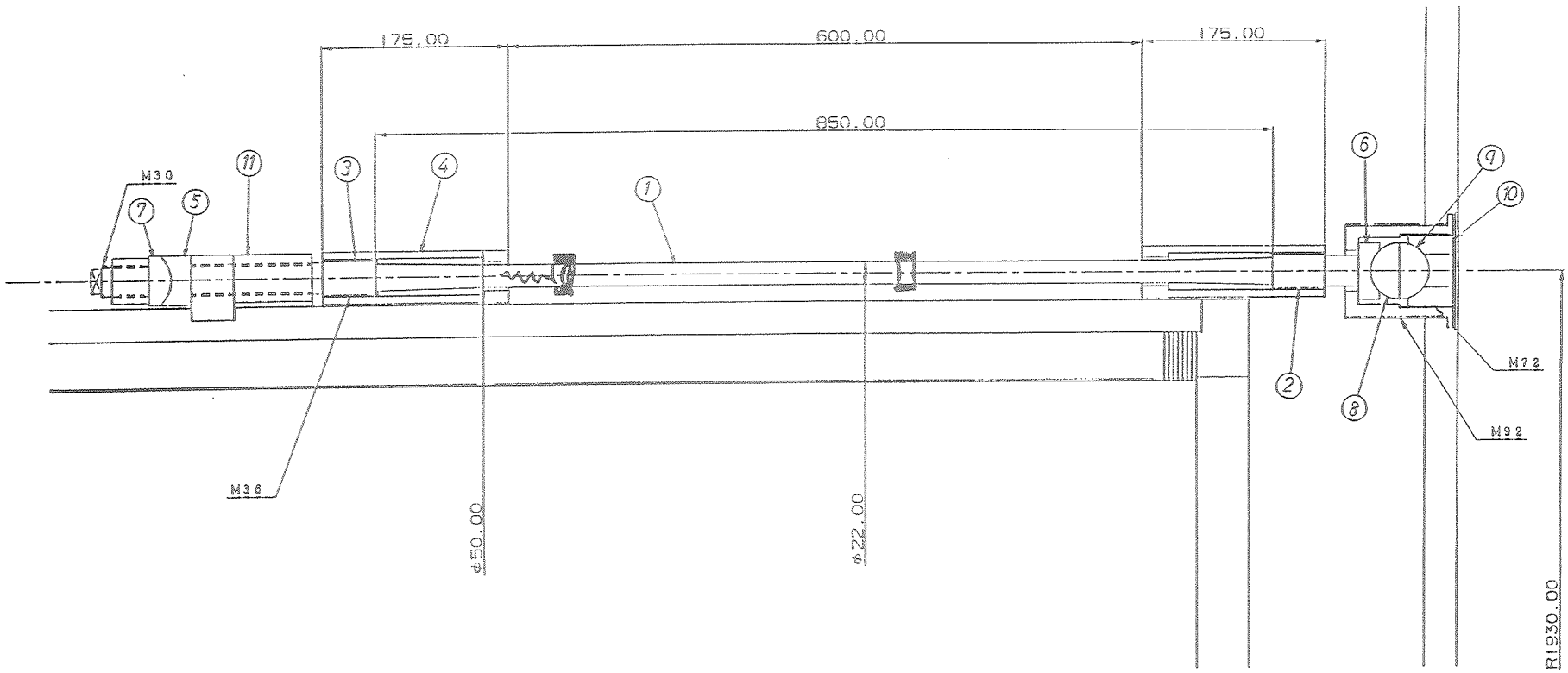

-6-

SDC軸方向サポート詳細図

1KN001049C

1KN001040 A SDC

7	取付金具	SUS	6×3	
6	延長ケット	SUS	13×3	
5	延長管	SUS	13×3	
4	マグネット支持金具	SUS	13×3	
3	クランニクッド	T1合金	6×3	
2	クランニクッド	T1合金	5×7	
1	電子銃マグネット	GFRP	6×3	[illegible]
注記	名称	材質	数量	備考

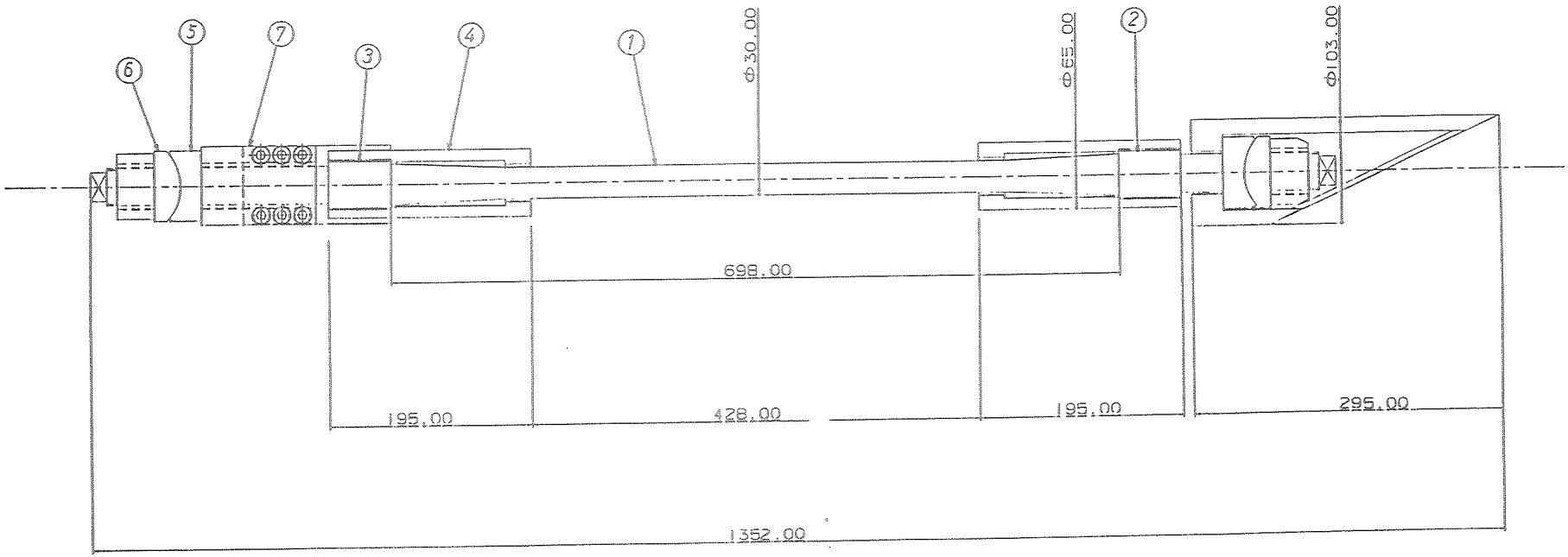

1/2 mm	東芝 TOSHIBA CORPORATION	SDCデ方向サポート詳細	1KN001040 A

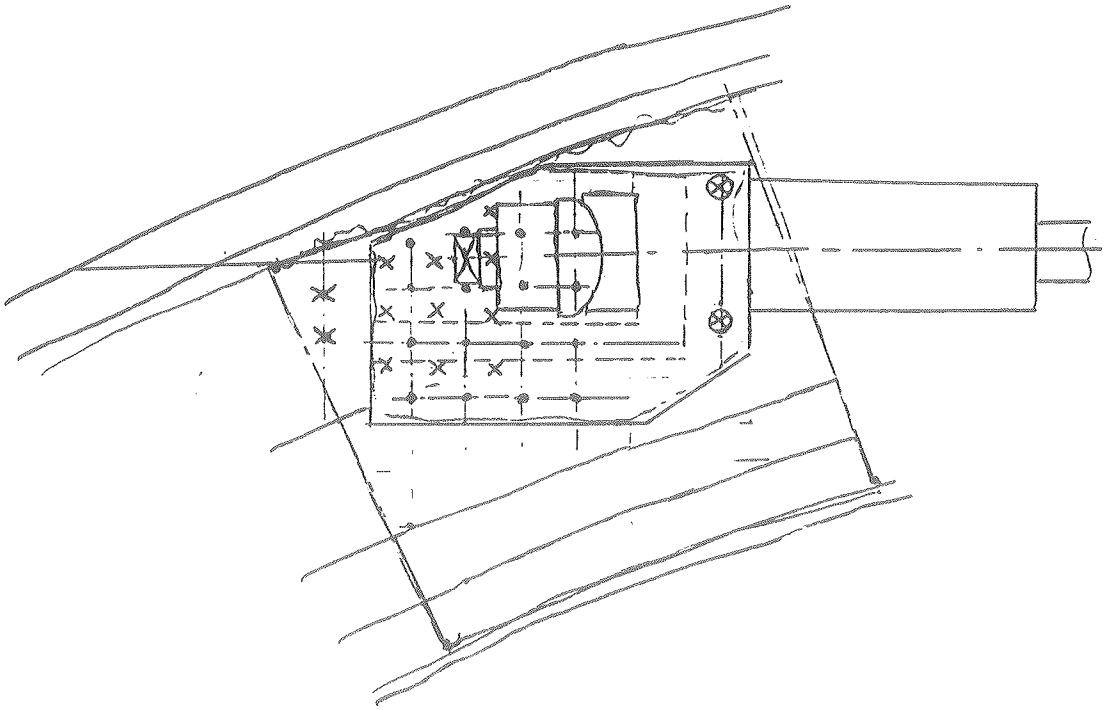

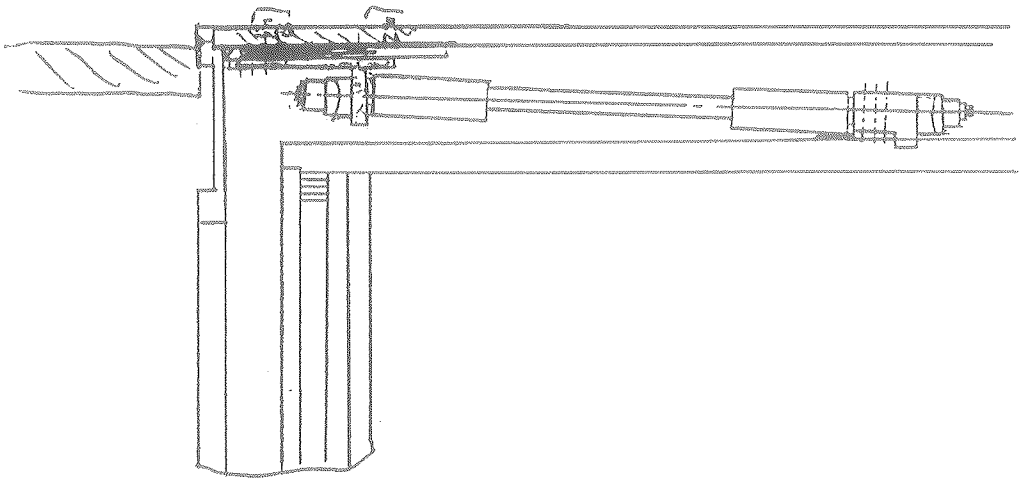

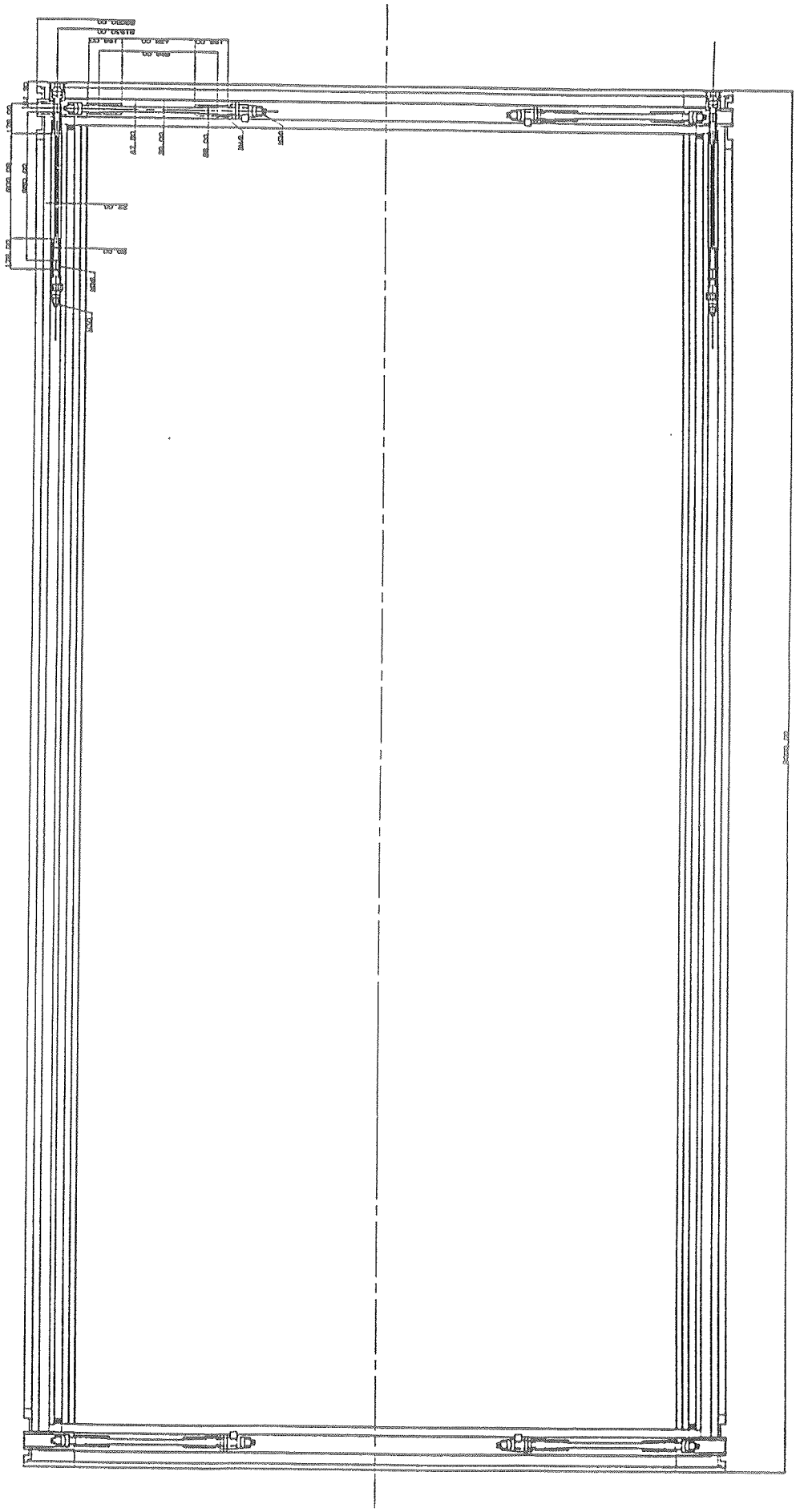

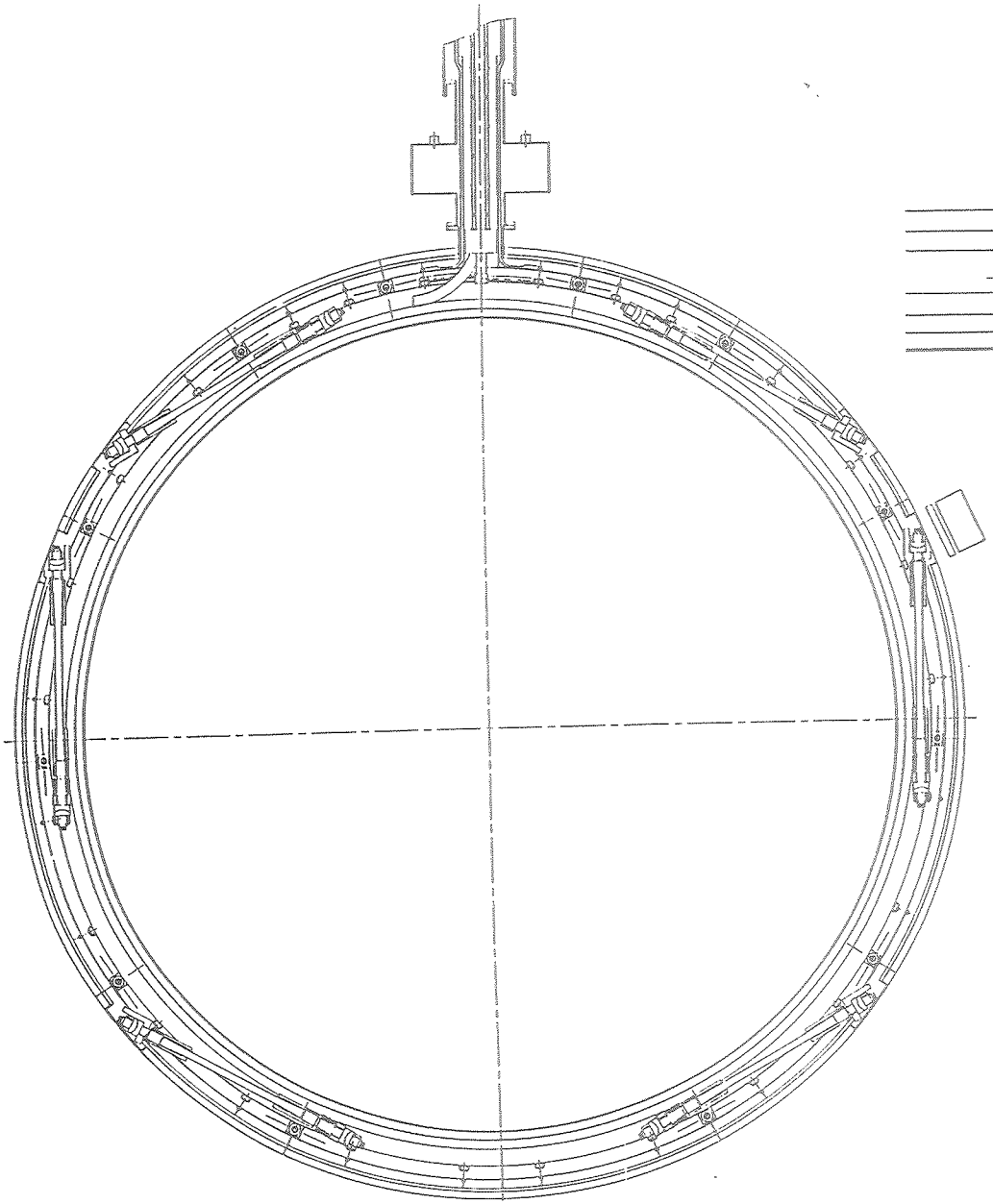

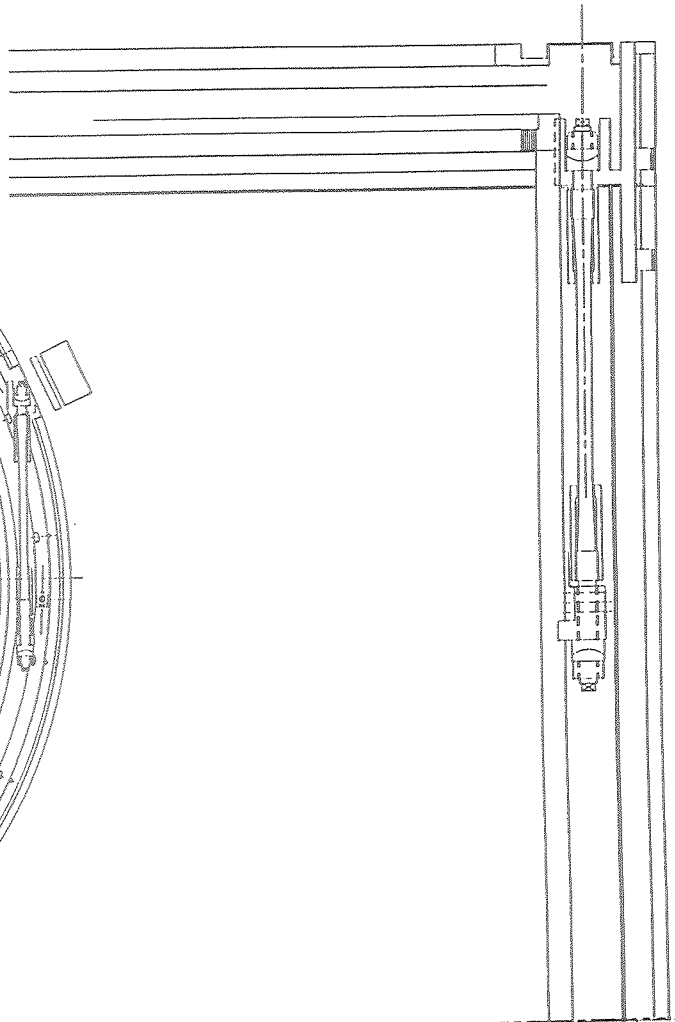

APPROVED BY
REVIEWED BY
PREPARED BY
CONTENTS

株式会社東芝
TOSHIBA CORPORATION
TOKYO JAPAN

APPROVED BY
REVIEWED BY
PREPARED BY
TITLE

DRAWING NO.
1

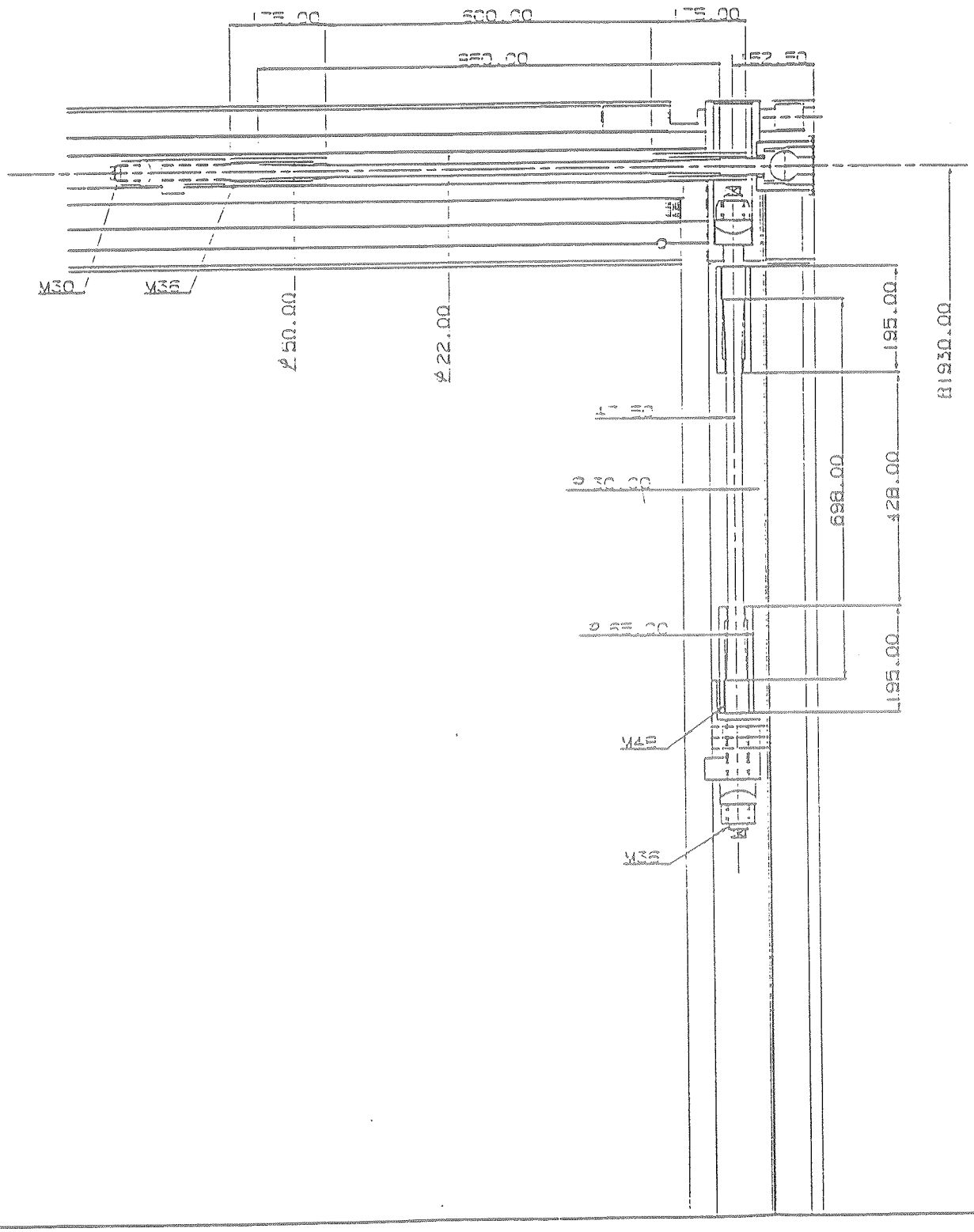

M30
M36
Ø50.00
Ø22.00
195.00
698.00
428.00
195.00
81930.00
M48
M36

VACUUM VESSEL

- ALL METAL (BRAZED) HONEYCOMB SHELL AND ITS POSSIBLE APPLICATION TO THE SDC OUTER SHELL HAS BEEN SURVEYED.

  RESULT ⇒ YES, FEASIBLE

  END RING + 3 × 6 UNITS JOINTED BY WELDING

  TO REALIZE COMPLETE METAL DOUBLE SHELL

- WE ARE PLANNING TO PROCEED R & D WORK.

- CONSULTATION FOR COMPARISON OF ISOGRID AND HONEYCOMB OVS SHOULD BE ENCOURAGED.

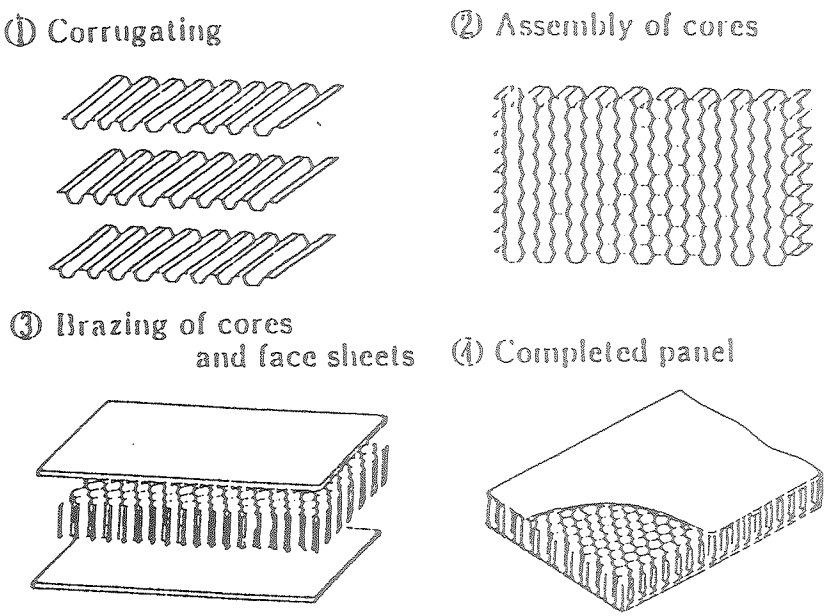

Fig. 1 Brazing processes of honeycomb panels.

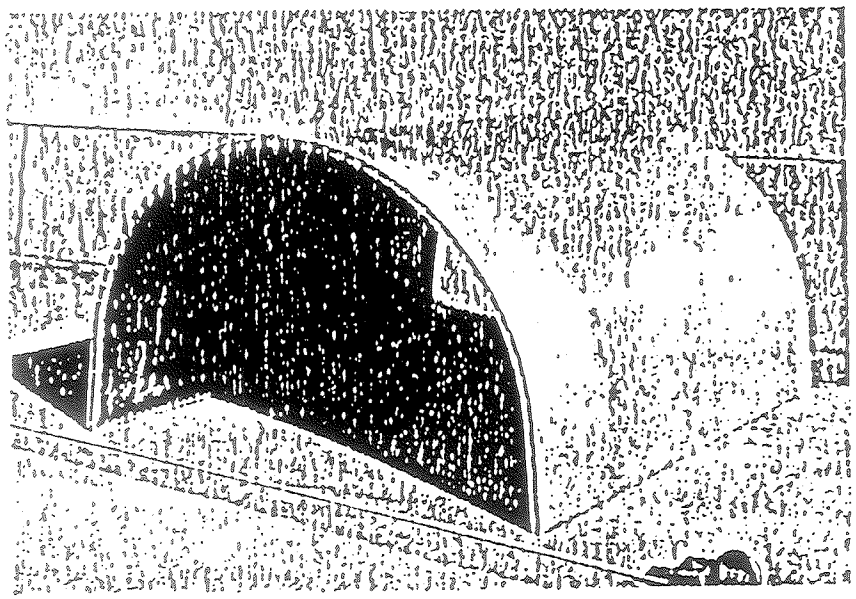

Fig. 3 A roll-bent honeycomb panel.

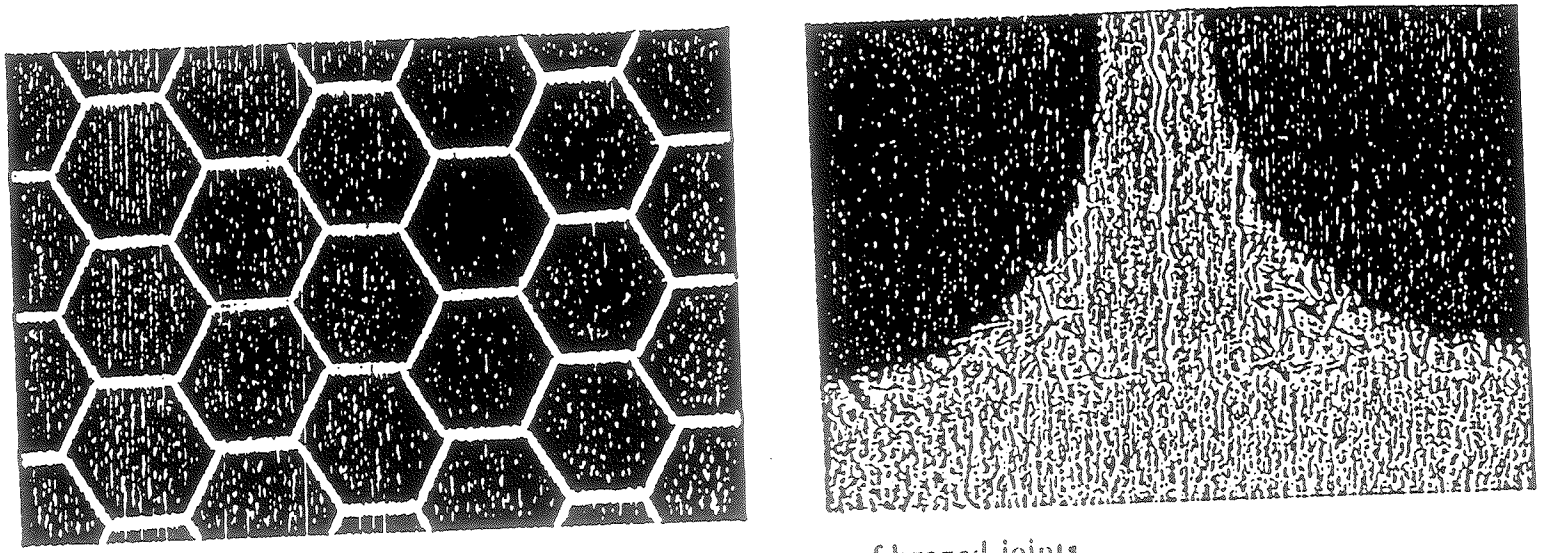

Fig. 2 Cross-sectons of brazed joints.

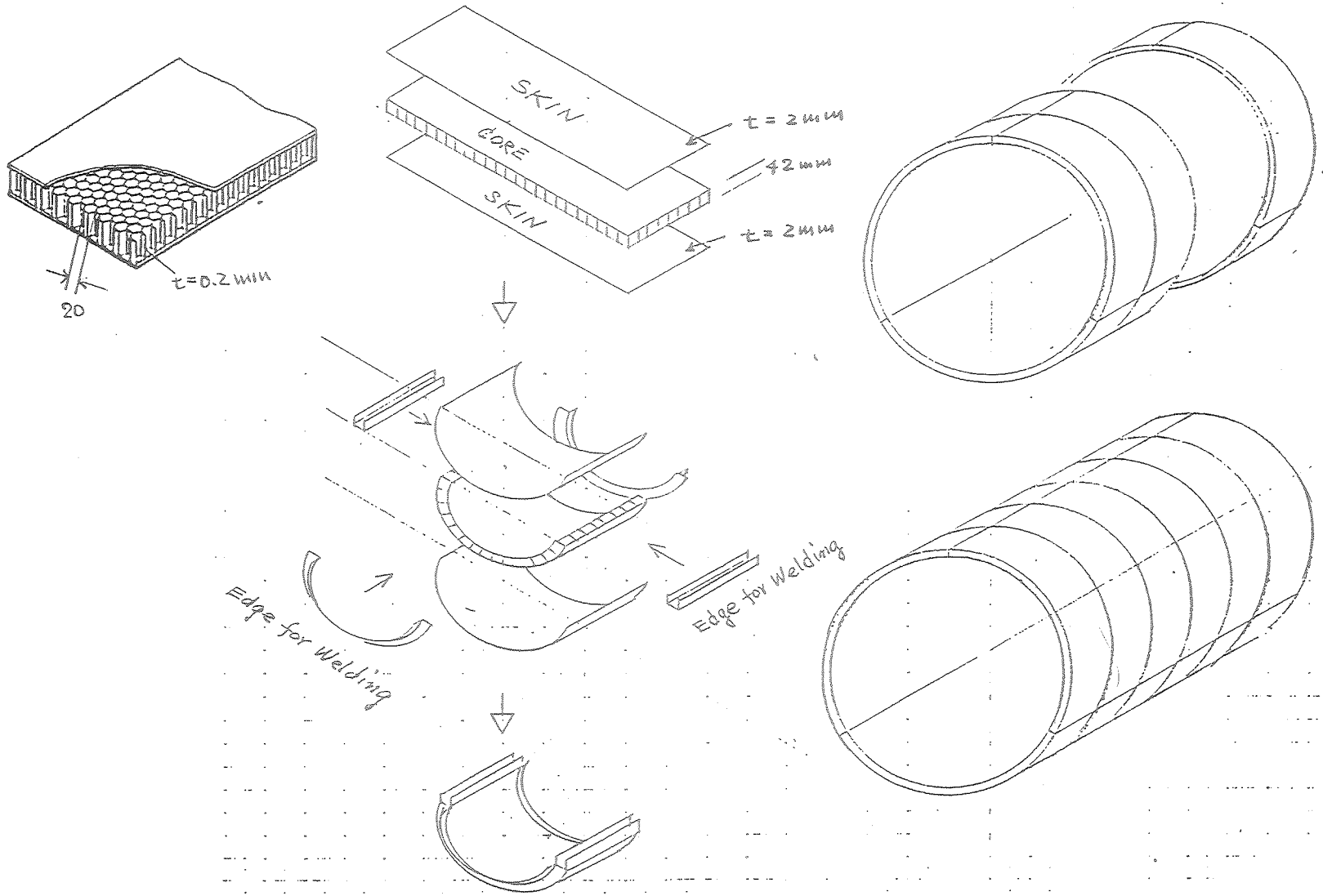

Fabricate Sequence for Honeycomb Cylinder

Fig. 3-11

Facing th'k = 2mm

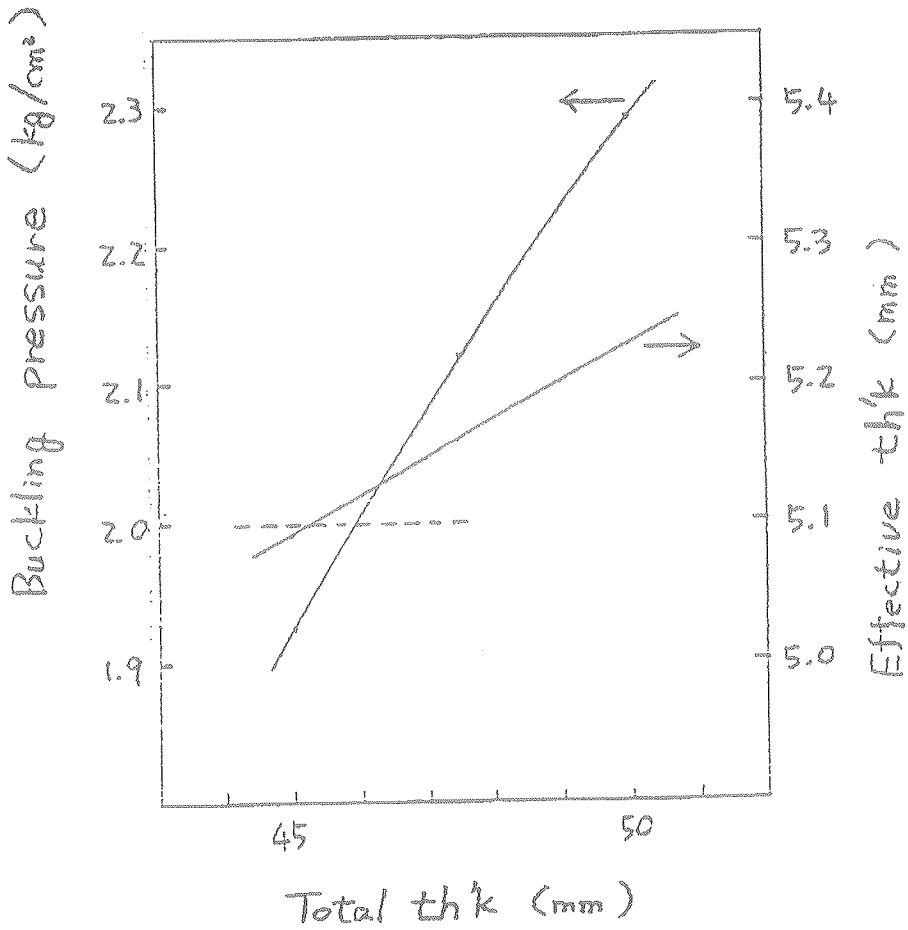

INTERFACE TO CALORIMETER AND TRACKER.

- A PLAN CONSIDER AT KEK.
  - OR OVS = 2050 MM $^{+0}_{-5}$ MM
  - IR IVS = 1750 MM $^{+3}_{0}$ MM
  - RADIAL STAYOUT ZONE = 50 MM FOR EACH CALORIMETER & TRACKER.
- QUESTION
  - HOW DO WE MAY FIX THE VAC. VESSEL TO CALORIMETER?

    RADIAL : ALL FIXED ?

    AXIAL : POSSIBLE BOTH END SUPPORT ?
  - TEMPERATURE CONTROL NECESSARY? IN CASE THERMAL LOAD (300 → 77 K) TO BE 300 W ?
    - VALUABLE TO PUT STYLO FOAM. INSIDE IVS IF SPACE AVAILABLE B/W R=1750 - 1700 MM ?

CHIMNEY

- ENGINEERING DESIGN IS BEING CARRIED OUT.
- SEE DRAWINGS.
- THERE IS STILL A QUESTION IF SENSOR SIGNAL SHOULD CROSS OVER THE VACUUM BOUNDARY AT THE BOTTOM OF CHIMNEY.
- FNAL-KEK BOUNDARY : SEEMS TO BE BETTER TO DISCUSS AFTER DECISION FOR RESPONSIBILITY.

CONTROL DEWAR

- IN A PERSONAL CONSIDERATION:
  - IT SEEMS TO BE USEFUL TO REALIZE QUICK RECOVER OF MAGNET OPERATION AFTER QUENCH.
  - CLOSE LOCATION OF REFRIGERATOR AND CONTROL DEWAR TO MAGNET MIGHT BE MUCH EFFICIENT.
  - CAPACITY OF 3,000 ℓ AND QUENCH RECOVERY TIME OF 6(~8) HOUR SEEMS TO BE A REASONABLE CHOICE.

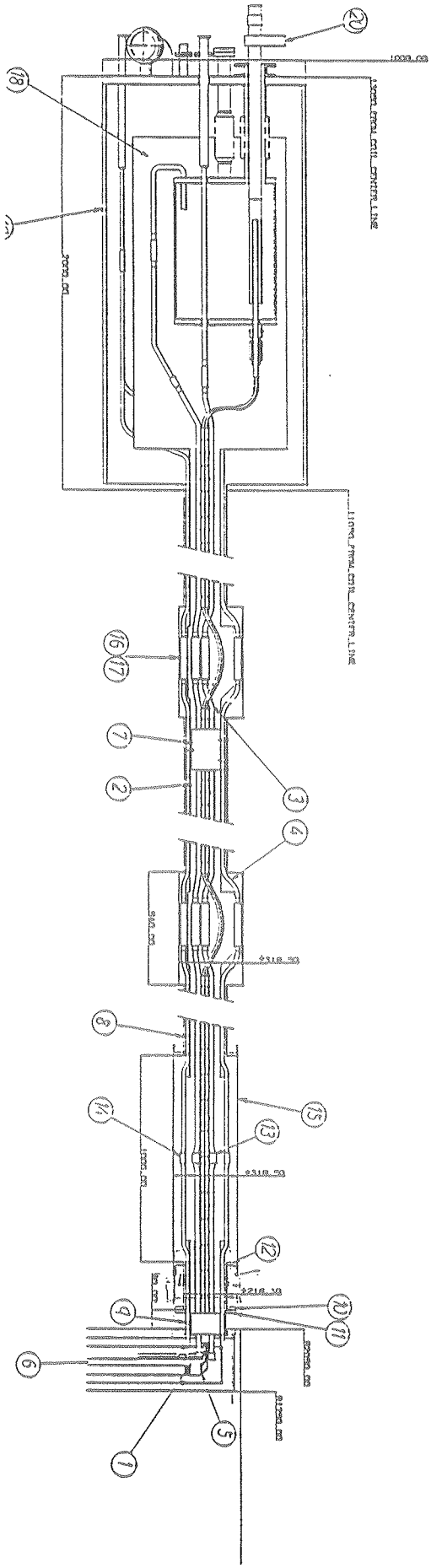

Fig. 3-13-(a)

Fig 3-13 (3)

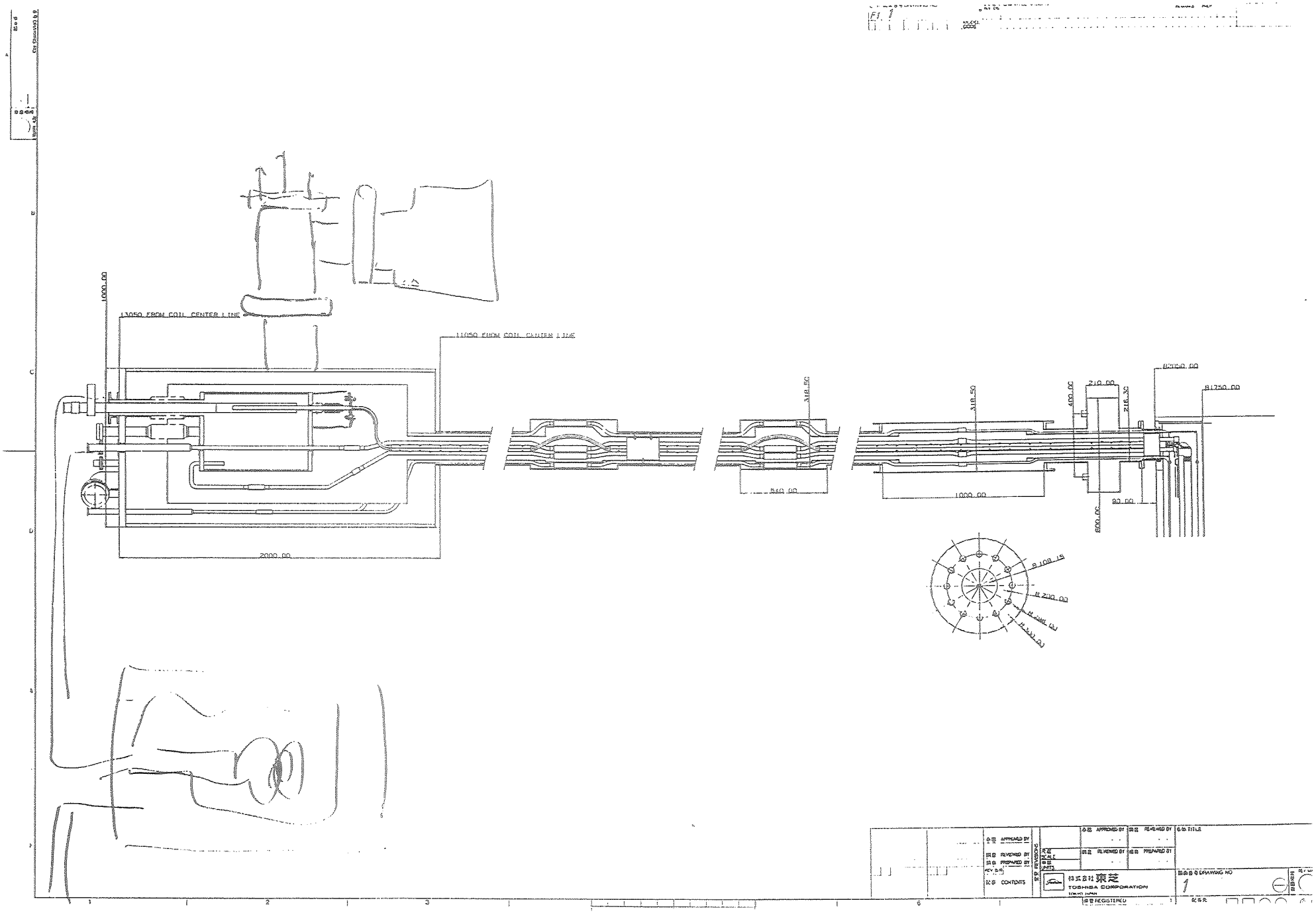

1000.00
13050 FROM COIL CENTER LINE
11050 FROM COIL CENTER LINE
2000.00
318.50
540.00
318.50
1000.00
400.00
210.00
216.30
82050.00
81750.00
90.00
600.00
R 109.15
R 200.00
APPROVED BY
REVIEWED BY
PREPARED BY
CONTENTS
REVISIONS
APPROVED BY
REVIEWED BY
PREPARED BY
TITLE
REVIEWED BY
PREPARED BY
TOSHIBA CORPORATION
TOKYO JAPAN
DRAWING NO
1
REGISTERED

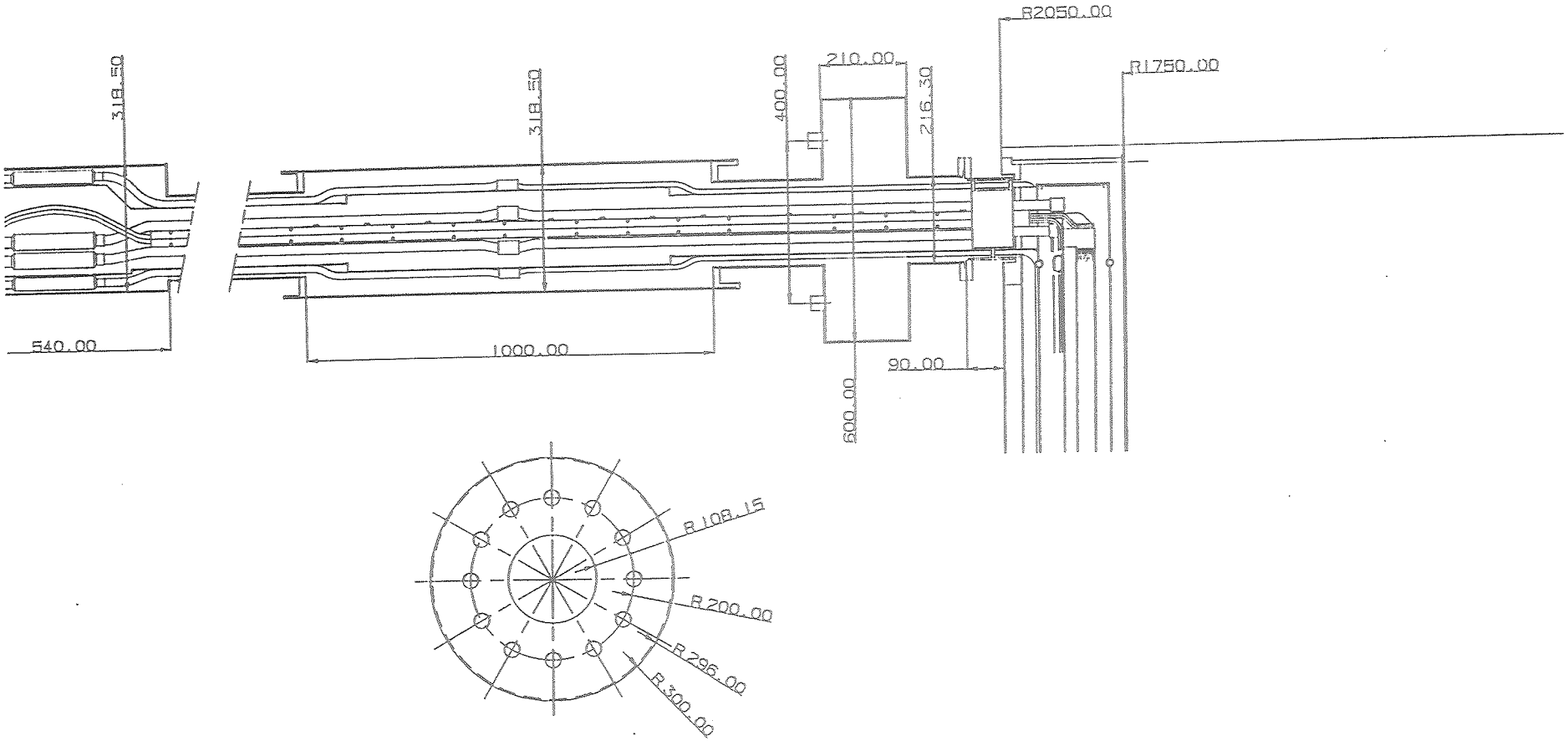
318.50
540.00
318.50
1000.00
400.00
210.00
216.30
600.00
90.00
R2050.00
R1750.00
R108.15
R200.00
R296.00
R300.00

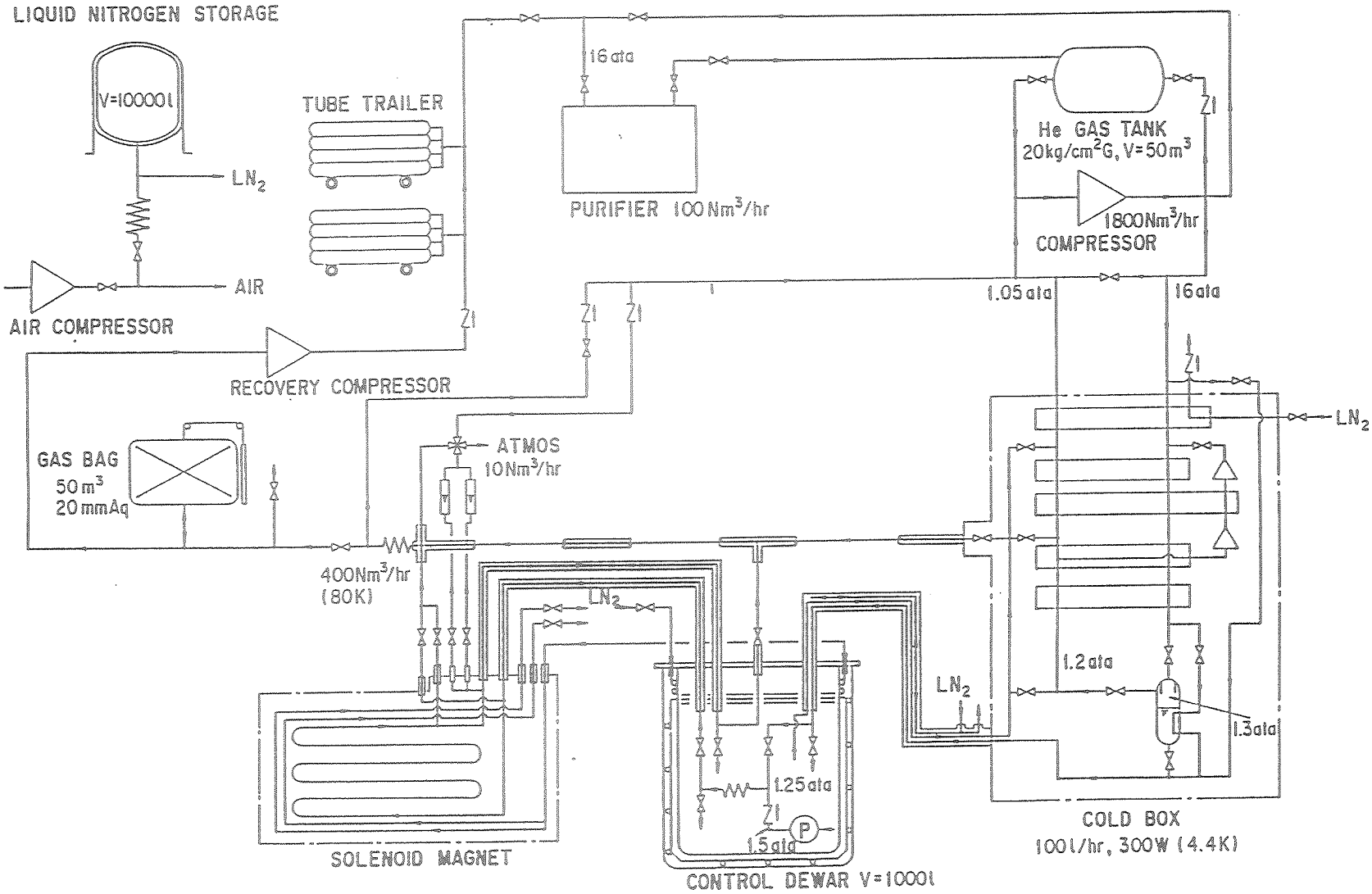

CRYOGENIC SYSTEM OF THE TOPAZ SOLENOID MAGNET

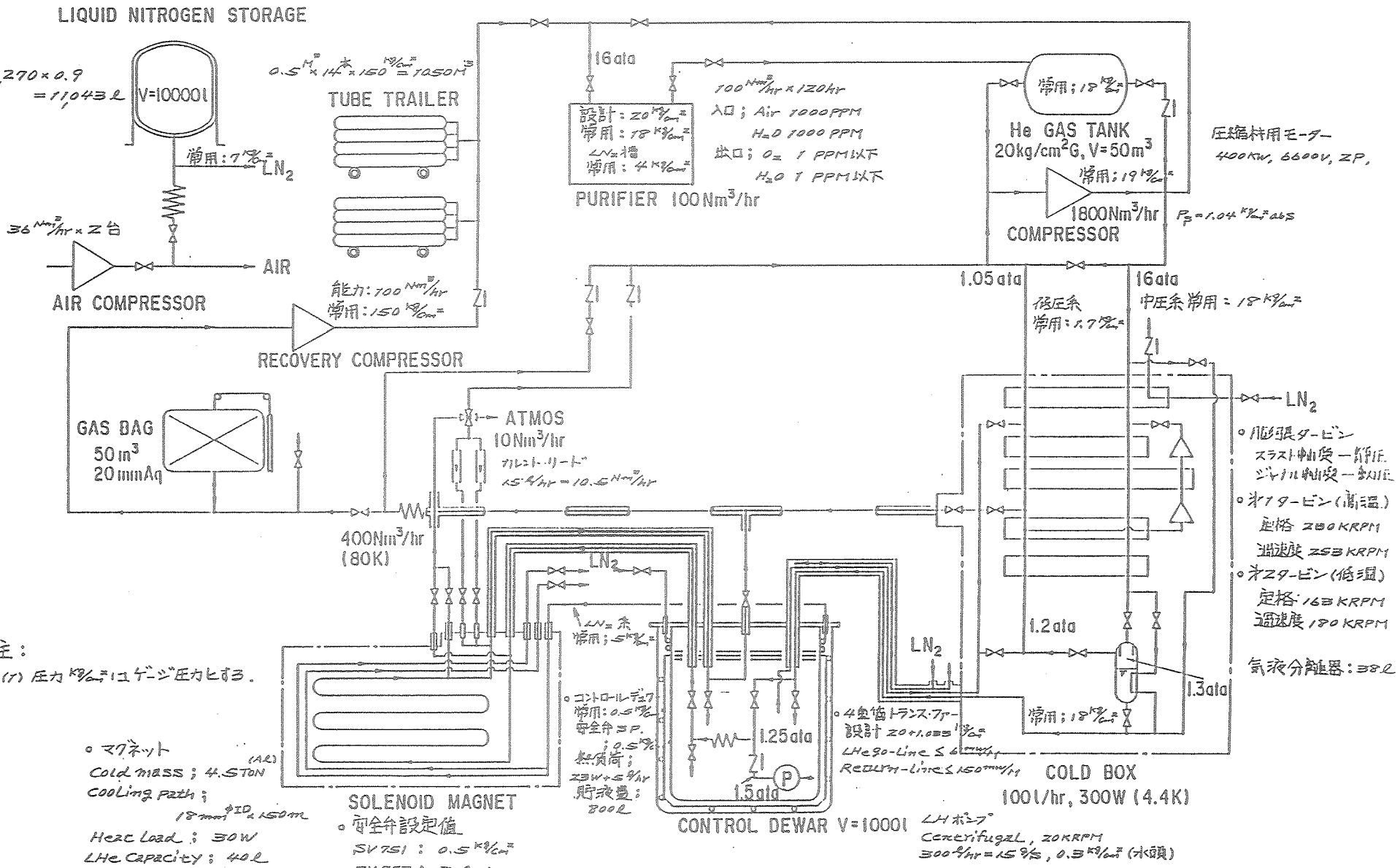

注：
(1) 圧力 kg/cm² はゲージ圧力とする.

CRYOGENIC SYSTEM OF THE TOPAZ SOLENOID MAGNET

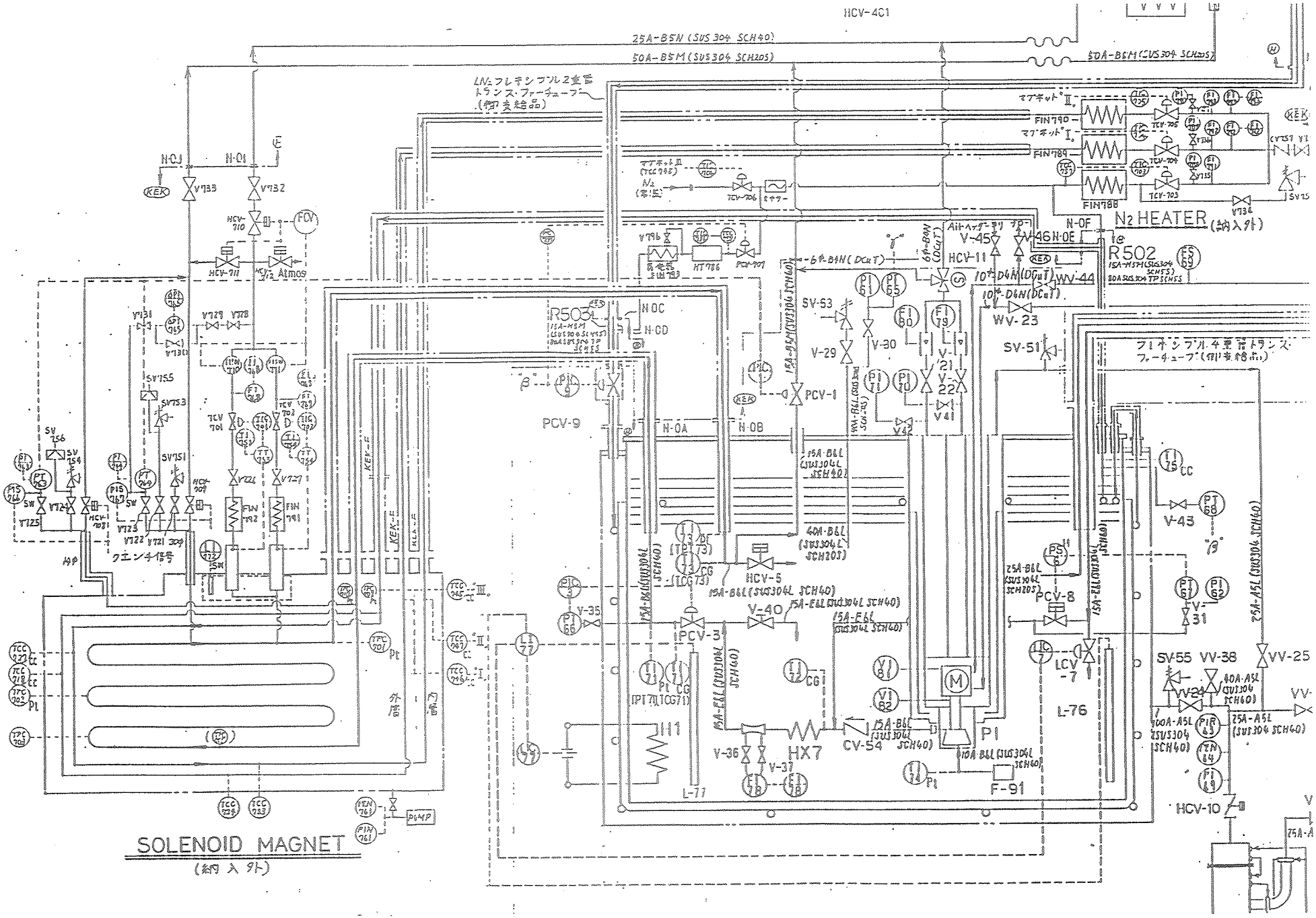
HCV-401
25A-B5N (SUS 304 SCH40)
50A-B5M (SUS304 SCH20S)
N2 HEATER
R502
R503
PCV-9
PCV-1
PCV-3
PCV-8
HCV-5
HCV-11
HCV-10
HX7
CV-54
F-91
L-76
L-77
H1
P1
SV-53
SV-51
SV-55
V-29
V-30
V-40
V-43
V-35
V-36
V-37
V-31
VV-38
VV-25
VV-24
WV-23
WV-44
V-45
V-46
N-OA
N-OB
N-OC
N-OD
N-OE
N-OF
N-OJ
N-OI
クエンチ信号
外筒
内筒
SOLENOID MAGNET
(納入外)

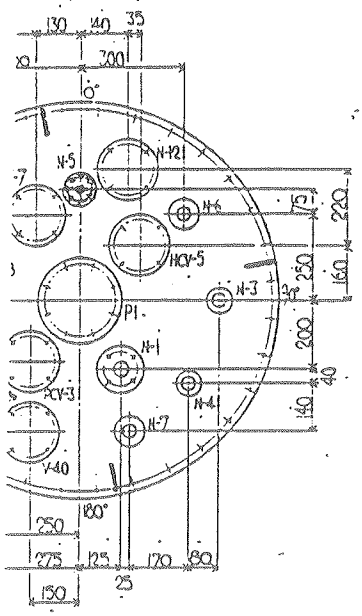

B-Bカラ見ル

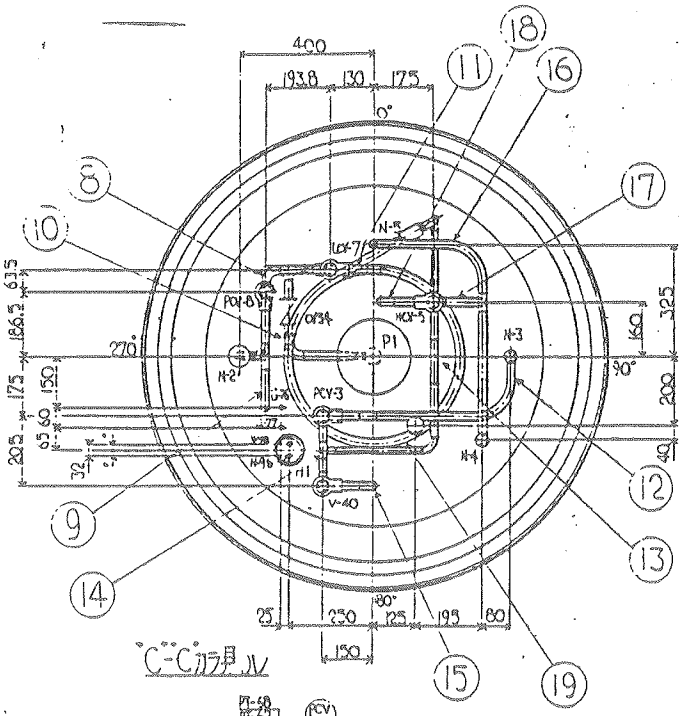

C-Cカラ見ル

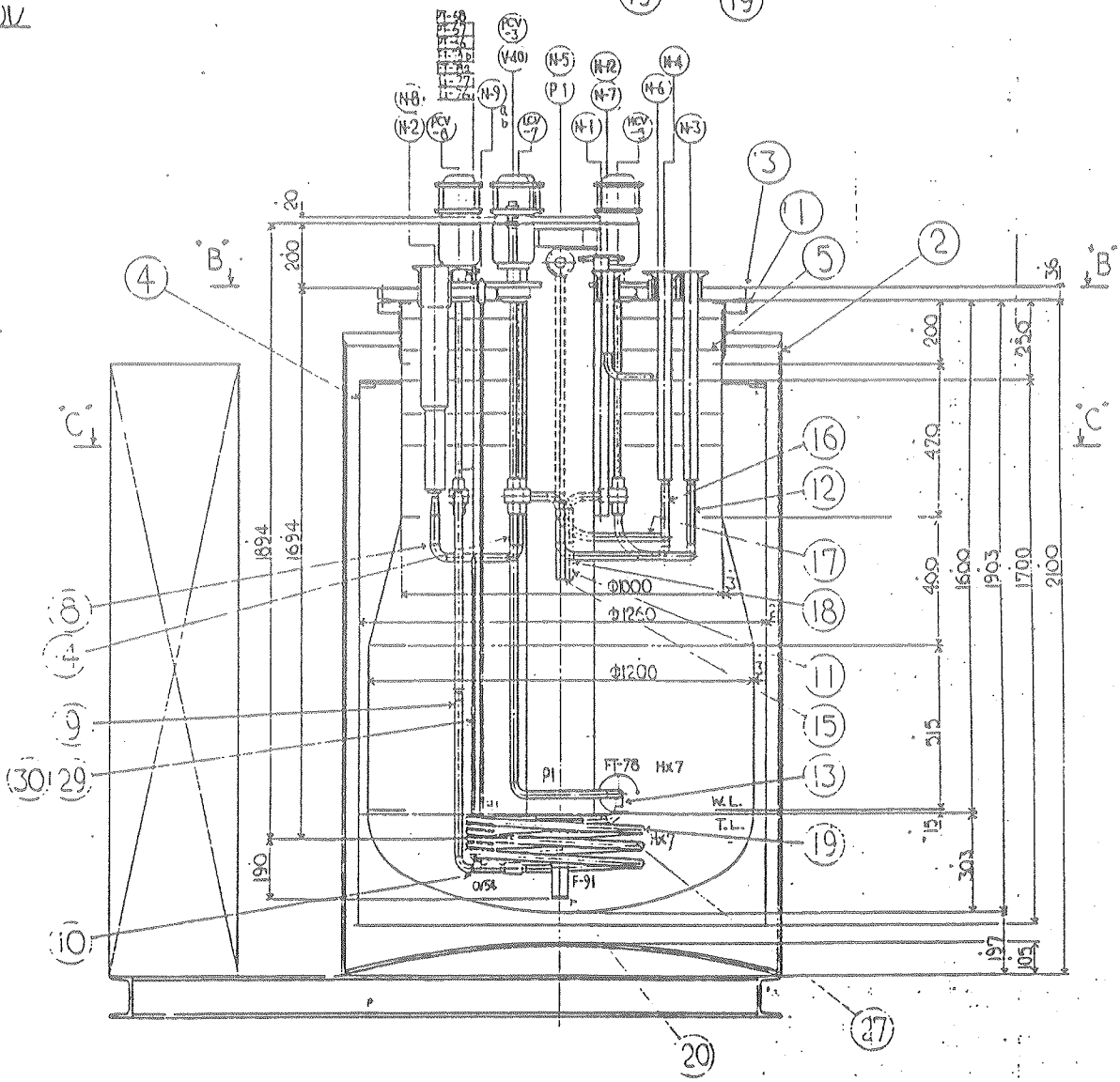

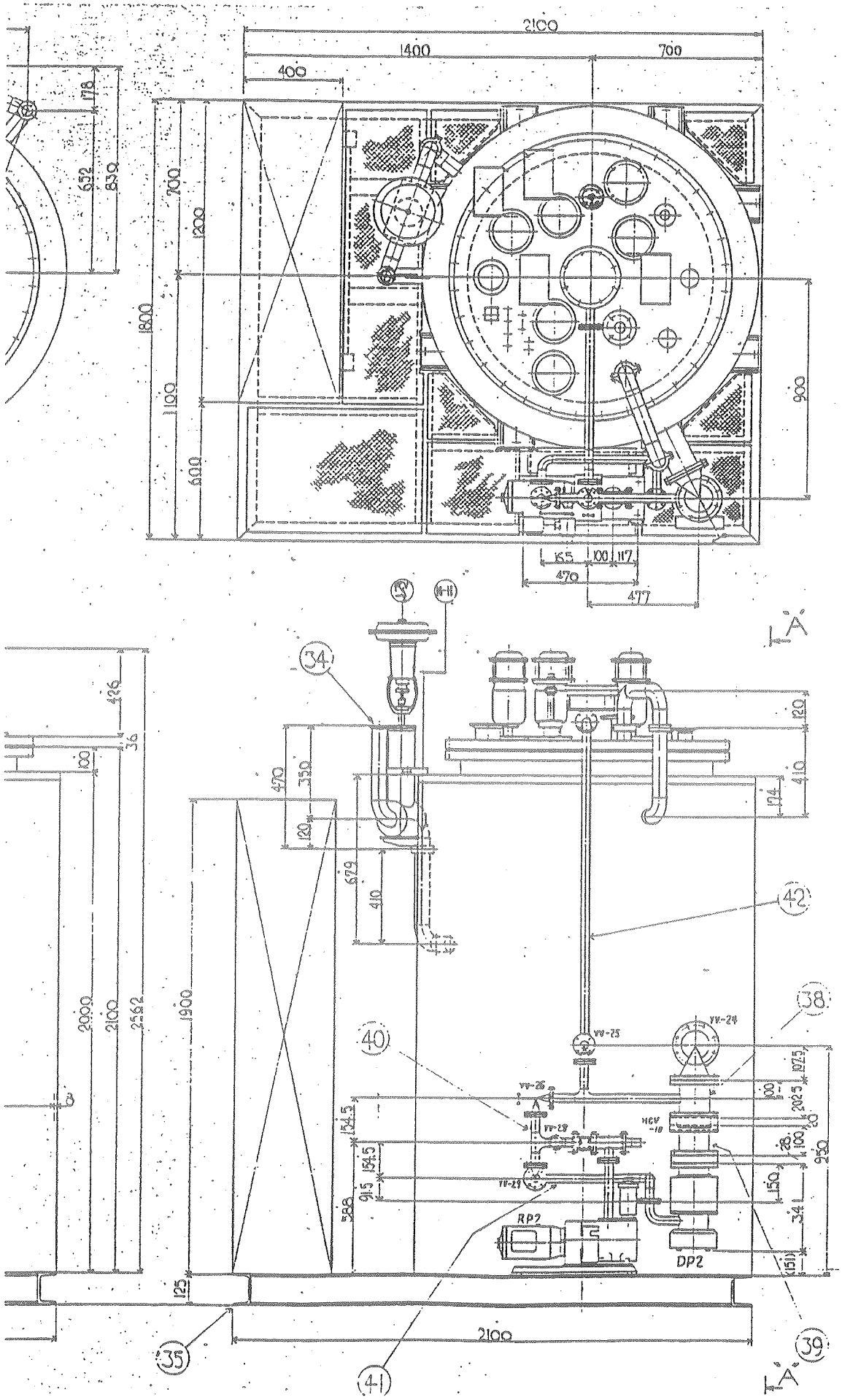
2100
1400
700
400
178
652
830
700
1200
1800
1100
600
900
165
100
117
470
477
A
34
42
38
40
35
41
39
2000
2100
2562
1900
470
350
120
679
410
120
410
174
426
36
100
125
154.5
154.5
91.5
588
RP2
DP2
VV-25
VV-24
VV-26
VV-28
VV-29
HCV-10
107.5
202.5
100
20
28
100
150
34
(151)
950
2100
A

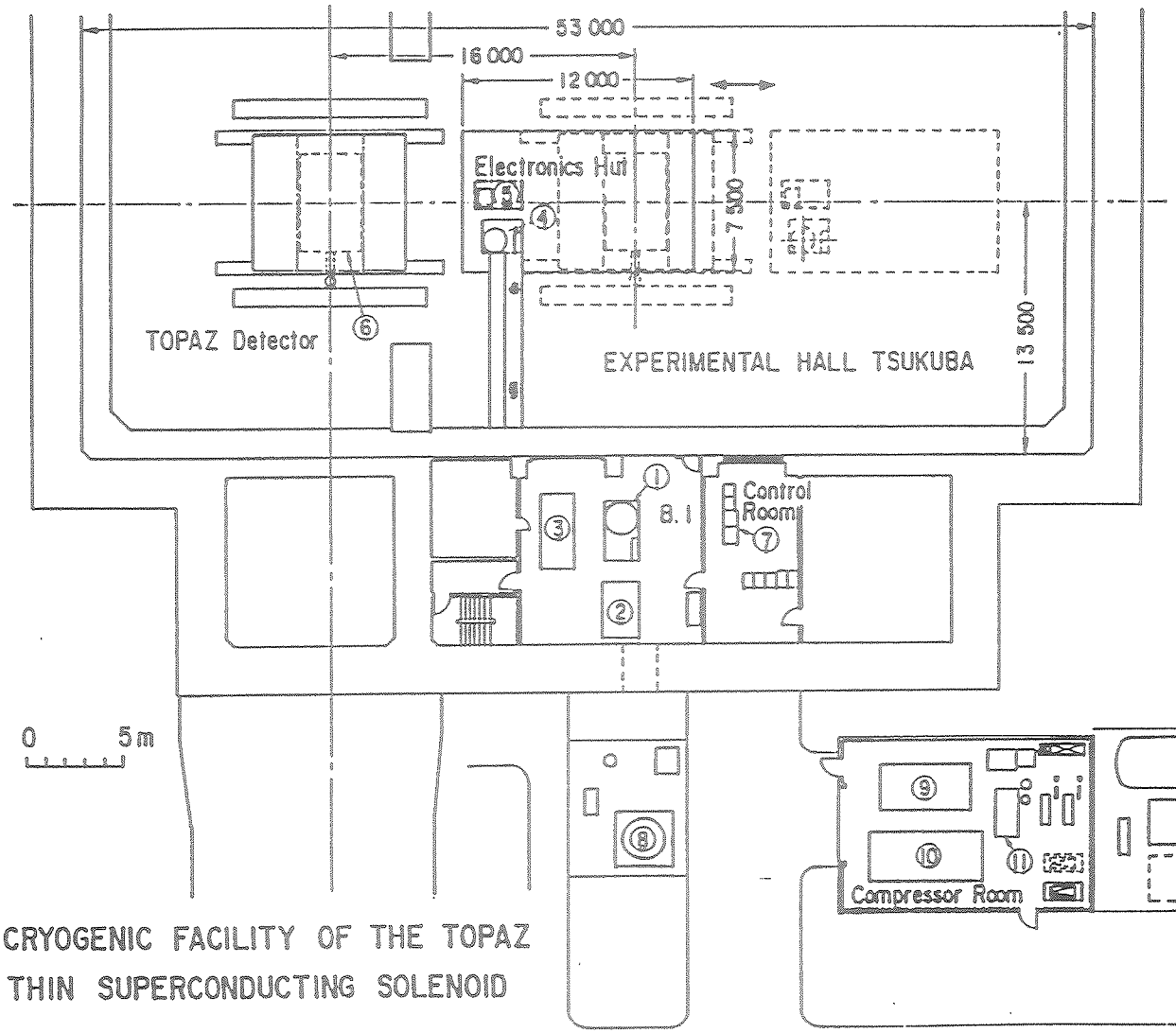

NO.	NAME OF ELEMENT
1	Cold Box
2	Purifier
3	Magnet Power Supply
4	Control Dewar
5	Magnet Control Panel
6	Solenoid Magnet
7	Control System "CENTUM"
8	Liq. N_2 Tank
9	Compressor
10	Gas Bag
11	Recovery Compressor
12	He Gas Tank
13	He Tube Trailer

CRYOGENIC FACILITY OF THE TOPAZ THIN SUPERCONDUCTING SOLENOID

PROTOTYPE MAGNET

1. PROGRESS IN JAPAN

SUPERCONDUCTOR

- L = 4.5 km CONTRACTED WITH FURUKAWA IN AUGUST.
- R&D CO-EXTRUSION (Al - NbTi/Cu CABLE) TO BE IN NOV.
- MAIN FABRICATION TO BE IN FEB. ~ MARCH, 1992.
- THERE HAS BEEN A NEW KNOWLEDGE SINCE LAST MEETING:

  CO-EXTRUSION TEMP. SHALL BE $400 \leq T \leq 450$ °C, NOT TO BE ≥ 500 °C TO ELIMINATE DEGRADATION OF SUPERCONDUCTOR.

COIL WINDING

- WINDING MACHINE FOR PROTOTYPE STILL IN DESIGN STAGE IN TOSHIBA, BASED ON EXPERIENCE OF TEST WINDING IN LAST FY. ··· A SAMPLE TO BE SHOWN.
- ELECT. INSULATION:

  GND - COIL : GLASS / EPOXY (G10 LIKE)

  TURN-TO-TURN: GLASS / KAPTON TAPE
- WINDING MACHINE TO BE READY IN SPRING, 1992.

OUTER SUPPORT CYLINDER (OSP)

- MATERIAL SELECTED TO BE A-5083-H32 AND

  $\sigma_{0.2Y} \simeq 1.5 \times \sigma_{0.2}(A5083)$

  TO BE DELIVERED BY DEC. 1991.

- COOLING TUBE WITH LONG-CIRCLE SHAPE

  TEMPORARILY ORDERED.

- OSP WITH COOLING TUBE ATTACHED WILL BE READY IN SPRING (MARCH), 1992.

RADIATION SHIELD

- IN DESIGN STAGE:
  - SINGLE UNIT OF CYLINDER W/O SPLITTING CONSIDERED.
  - SINGLE COOLING PASS WITH ID = 14 mm CONSIDERED.

SUPPORT

- IN DESIGN STAGE:
  - MATERIAL : UNI-AXIAL GFRP

    $\sigma_{T.U.S} \geq 100\ kgf/mm^2$ (= 1 GPa, = 140 Kpsi)

    $\sigma_{allowed} \lesssim 25\ kgf/mm^2$
  - CONFIGURATION : SEPARATE FUNCTION
    - SUPPORT RODS TO BE PARALLEL TO FORCE DIR.

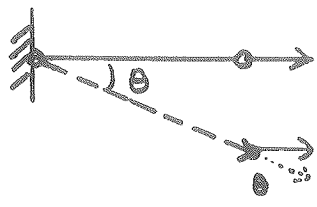

$$F_{EFF} = F \frac{1}{\cos\theta}$$

    - IT IS HELPFUL TO MINIMIZE THERMAL LOAD AND TO MINIMIZE MATERIAL NECESSARY.

- ATTACHMENT TO VAC. VESSEL :

  A <u>DESIRED OPTION</u> TO <u>FIX ALL SUPPORT RODS</u> ON <u>END FLANGES</u> ... SURVEYED.

VACUUM VESSEL

- THICKNESS OF OUTER VAC. SHELL (OVS) :
  - T = 56 mm IS TOO CONSERVATIVE IN HONEYCOM DES.
  - WE MAY AGREE IT, HOWEVER, IF OUTER RADIUS OF SHELL MIGHT BE 2060 mm, IN PROTOTYPE.
- LOCATION OF CHIMNEY ON OVS SHOULD BE PRACTICED IN THE PROTOTYPE.
- VACUUM SEALING :
  - MORE CONSIDERATION WILL BE NECESSARY. "O-RING SEAL" SEEMS TO BE POSSIBLE FOR OVS.
  - FOR INNER, NEED TO CONSIDER. ... HELPFUL AT FNAL TEST.

    DON'T WE NEED TO CHECK THE COIL AFTER THE PROTOTYPE TEST ? (ONE END ?)
- CONICAL SECTION :
  - MAY NOT BE NECESSARY IF I.R. = 1750 mm.

(- HONEYCOMB R & D :
  - WILL BE CONTINUED AT KEK.)

- OTHERS :
  - SMALL FLANGES ATTACHED TO END FLANGE (BH) WILL BE VERY USEFUL.
  -

ASSEMBLY

- VERTICAL ASSEMBLY IS CONSIDERED.

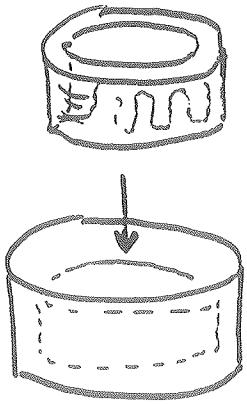

TEST PROGRAM

- POWER SUPPLY:

  AVAILABILITY IS BEING SURVEYED, INCLUDING TO PURCHASE IT.

- DATA ACQUISITION:

  BASIC EQUIPMENT AVAILABLE AT KEK BUT IMPROVEMENT NECESSARY.

- SAFETY DOCUMENT

  TO BE DISCUSSED.

- TEST PROCEDURE

  $I_{GOAL} = \sim 11{,}250$ A

  QUENCH : HEATER QUENCH TO BE EXPECTED.

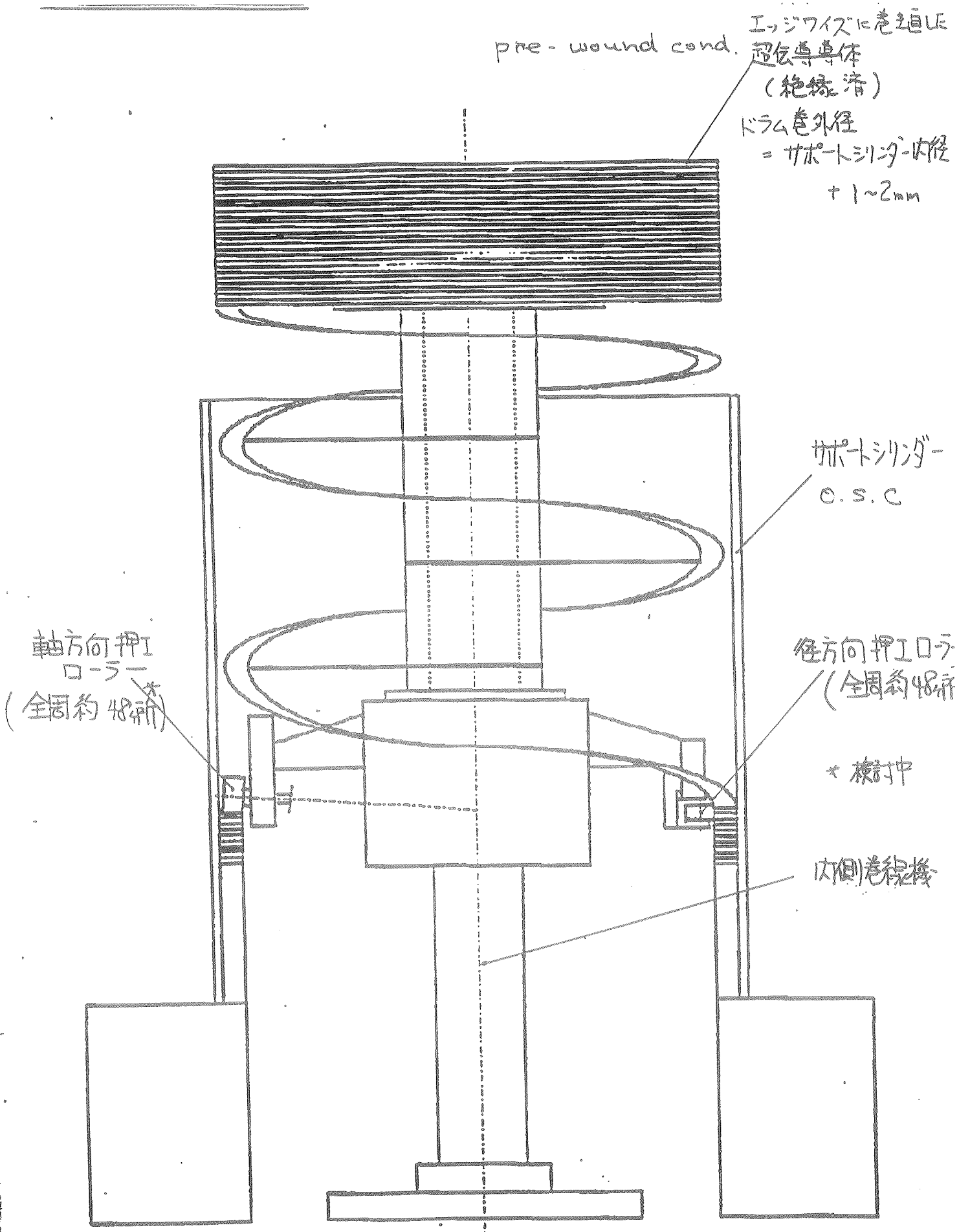

PLANNED WINDING MACHINE

1991.11.6 A.Y.

SCHEDULE PLAN FOR PROTOTYPE MAGNET

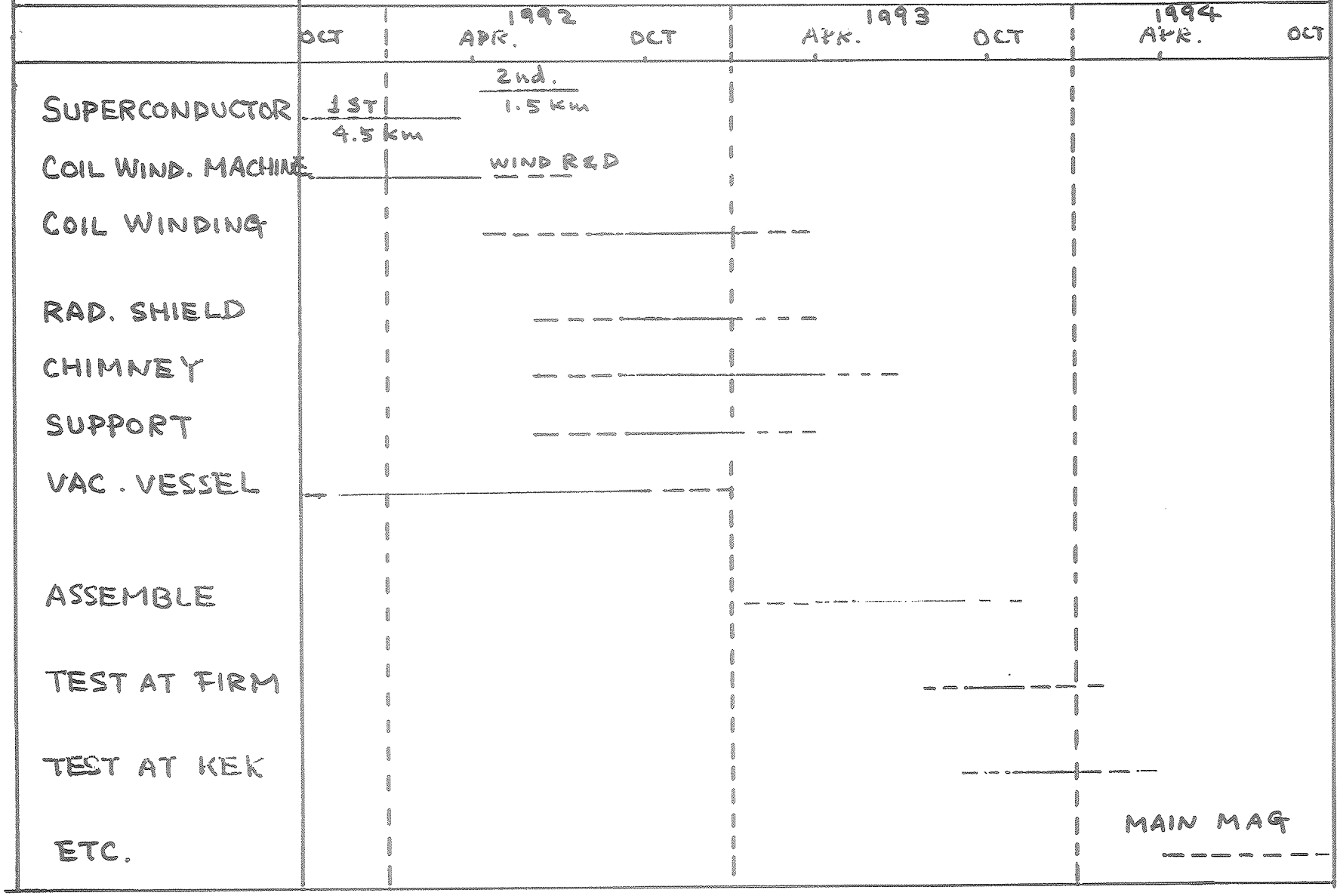

Table 7-1. Design parameters of the prototype R&D solenoid magnet.

Parameters		Main Coil	Prototype Coil
Dimensions:			
Cryostat	Inner Radius	1.75 m	1.75 m
	Outer Radius	2.10 m	2.05 m
	Half Length	4.0 m	1.2 m
Coil	Effective Radius	1.85 m	1.85 m
	Half Length	3.8 m	0.95 m
	Coil + OSC	44 + 31	44 + 31 mm
Tracking	Aperture Radius	1.7 m	1.7 m
	Half Length	4.0 m	1.2 m
Transparency	Radiation Thickness	1.2 Xo	1.2 Xo
	Interaction Length	0.25 λo	0.25 λo
Electrical Parameters			
Central Field		2.0 T	1.54
Int. B. dl ($\eta = 0$)		3.4 T.m	
Nominal Current		8,000 A	11,250 A
Inductance		4.2 H	0.68 H
Stored Energy		133 MJ	48 MJ
E / M		7.1 KJ /. kg	10 KJ / kg
Mechanical Parameters			
Effective Cold Mass		18 tons	4.5 tons
Total Weight		21 tons	8 tons
Radial Magnetic Pressure (@z = 0)		1.67 MPa	1.73 MPa
Axial Total Compressive Force		17.7 MN	16.7 MN
Maximum hoop stress		41 MPa	43 MPa
Maximum axial stress		- 21 MPa	- 19 MPa
Maximum shear stress on bonding		62 MPa	62 MPa
Max. shear stress on bonding		< 10 MPa	
Peak field in coil		2.8 T	3.8 T
Load line Ratio		50 %	

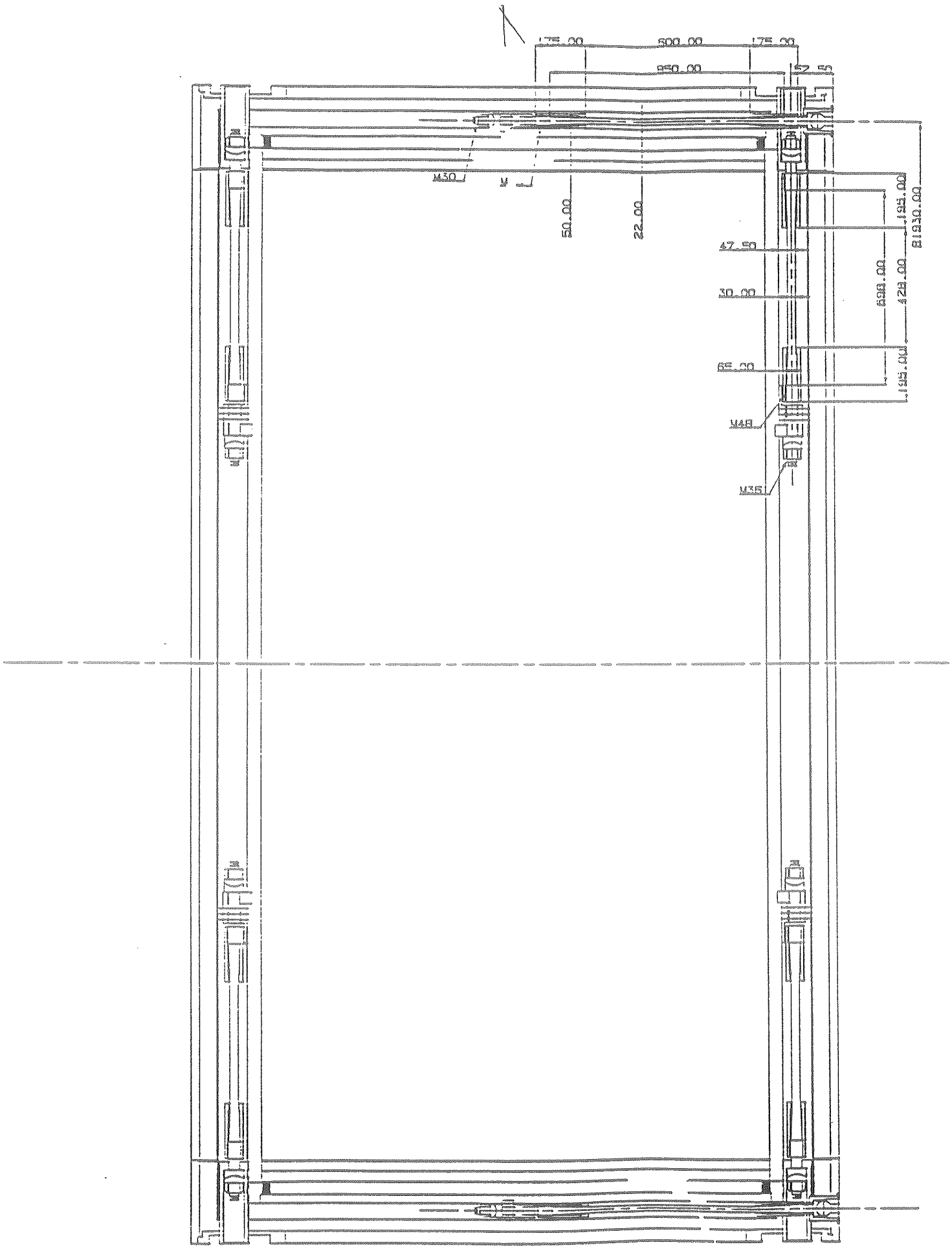

175.00
500.00
175.00
950.00
M30
50.00
22.00
47.50
30.00
65.00
M48
M35
195.00
81930.00
698.00
428.00
195.00

プロトタイプコイル 製作手順

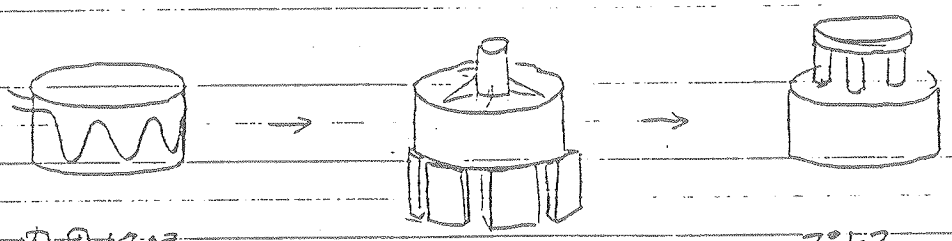

内周絶縁
(真空バック法)

巻線(接続)

プレス
加熱(~70°C)
内周レジンふきとり

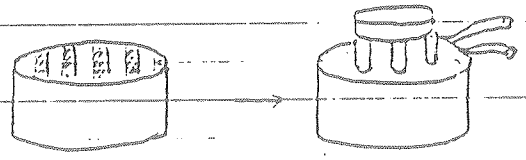

内周絶縁
純Al ホソ

プレス(~700トン)
ホースモールド(~Patm, 130°C)

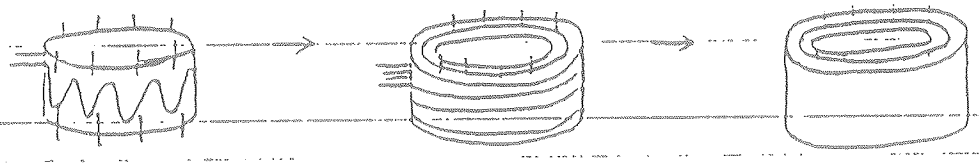

軸サポート取付

80Kシールド
内外筒

V.V. 内外筒

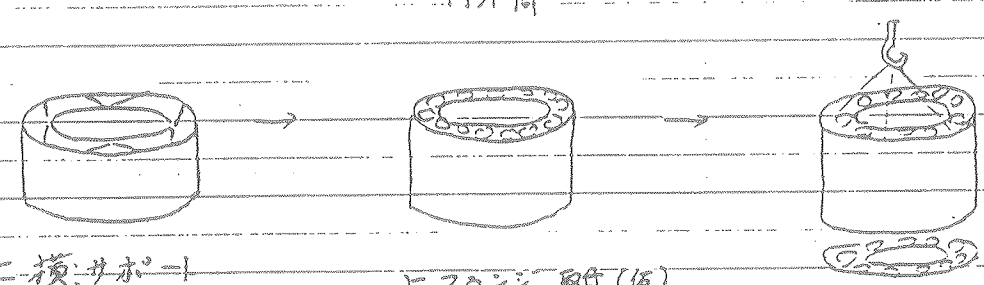

上横サポート

上フランジ取付(仮)
上軸サポート固定

吊下げ
下横サポート
下フランジ取付
下軸サポート固定

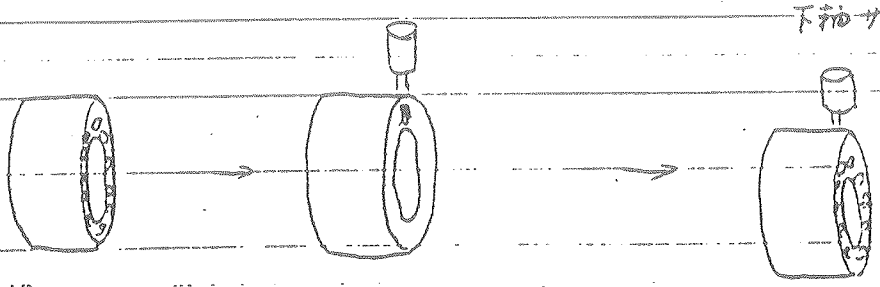

横丸おし

チムニー側フランジ外し
チムニー取付
P/L配線, 配管

チムニー側フランジ取付

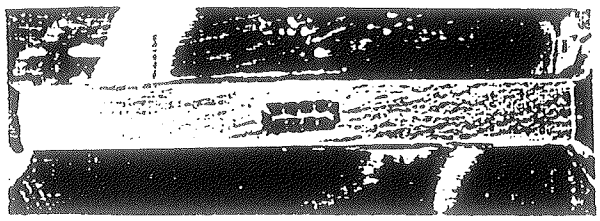

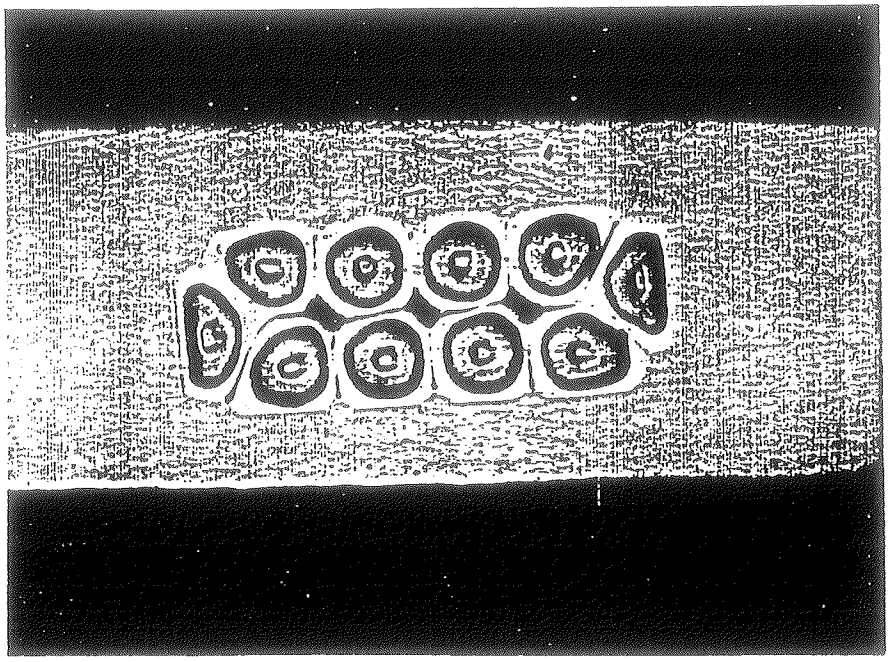

CROSS SECTIONS OF THE SDC AL STABILIZED SUPERCONDUCTOR

Fig. 7-1

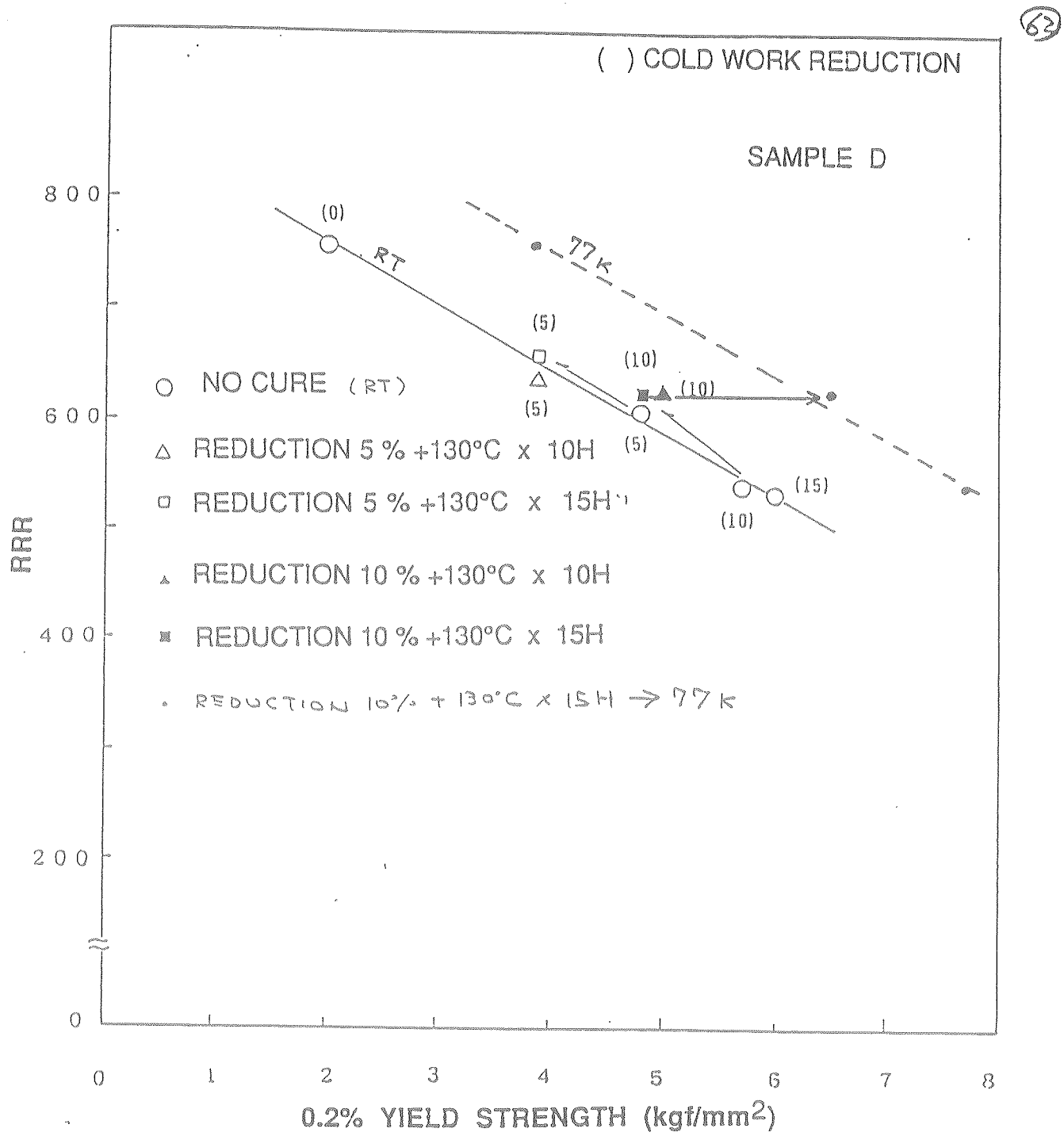

RRR v.s. Y/S in SAMPLE D

Fig. 7-2.

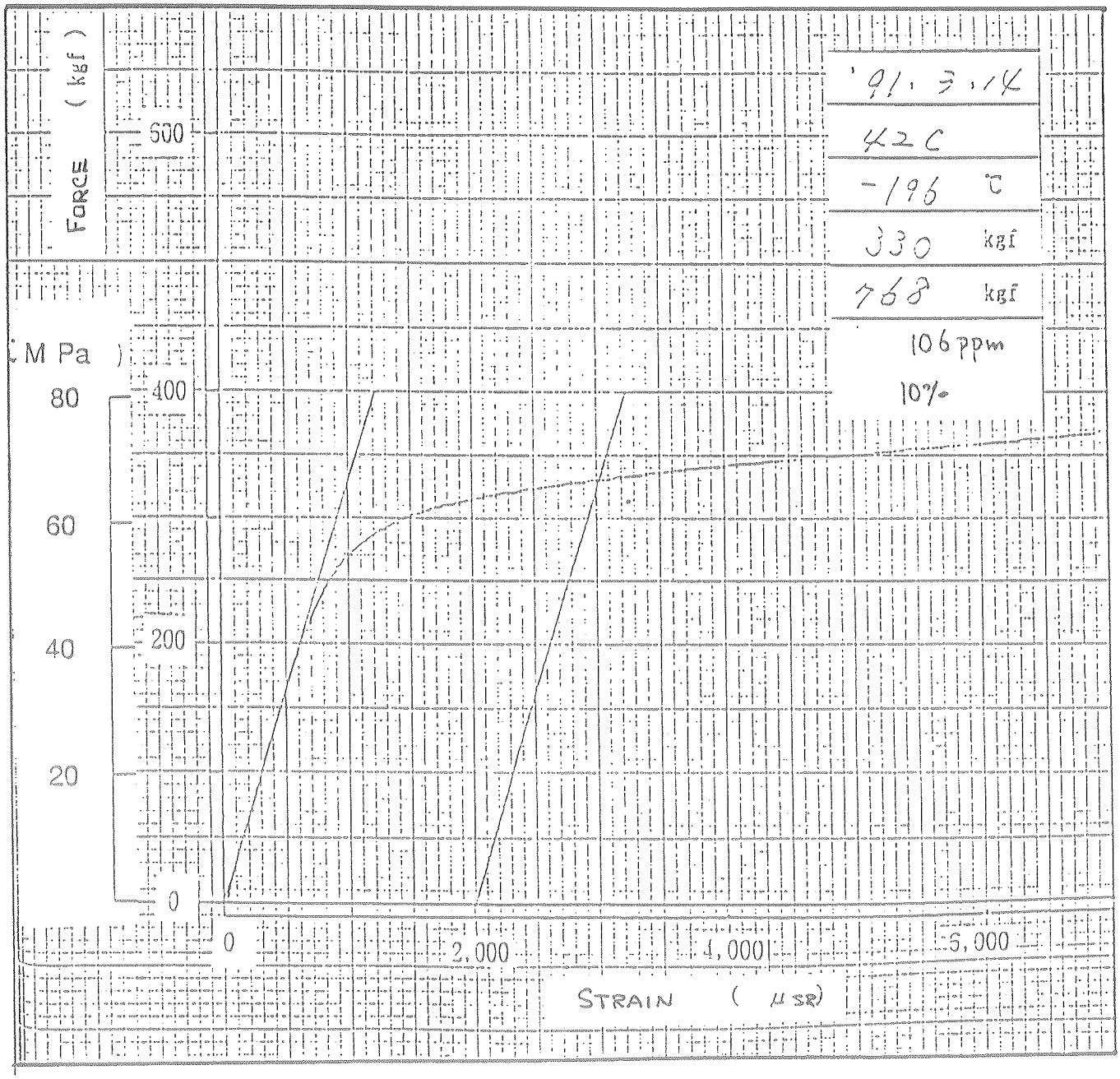

A STRESS- STRAIN CURVE OF HIGH STRENGTH PURE Al (4N)

Fig. 7-3

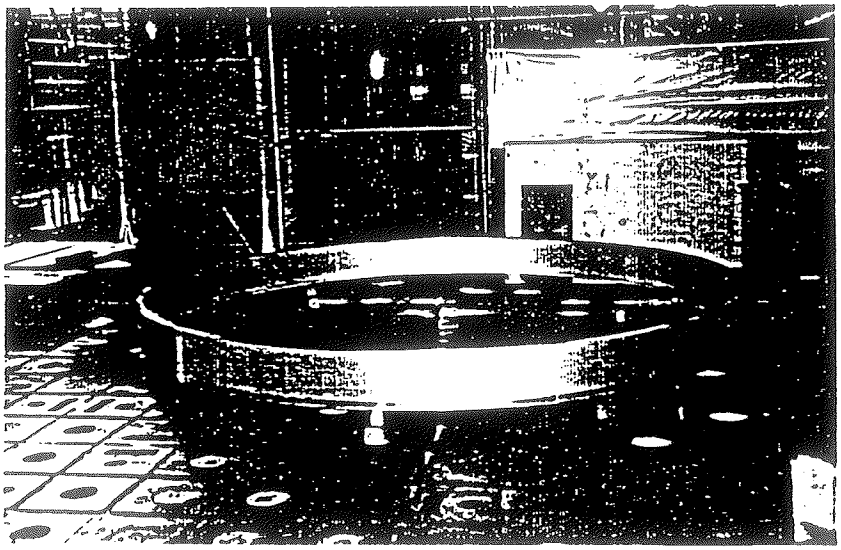

1
SUPPORT CYLINDE

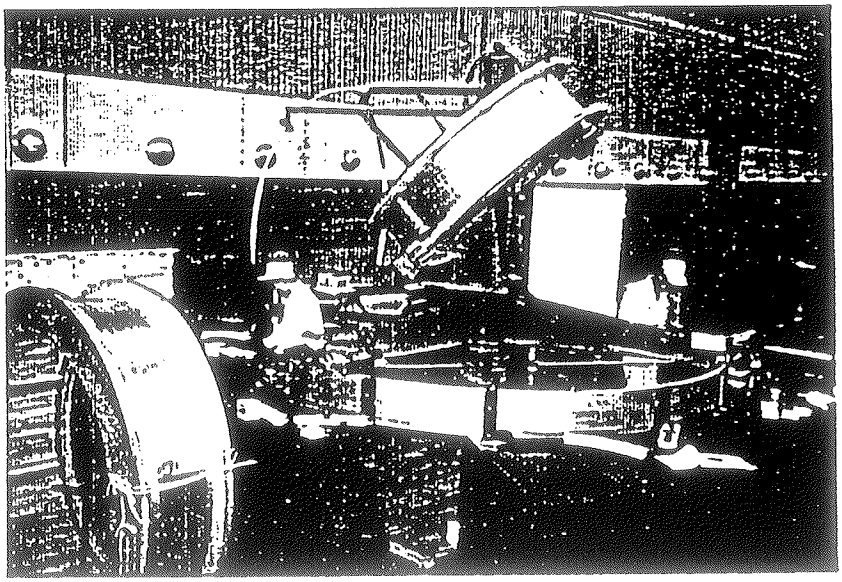

2
WINDING MACHINE

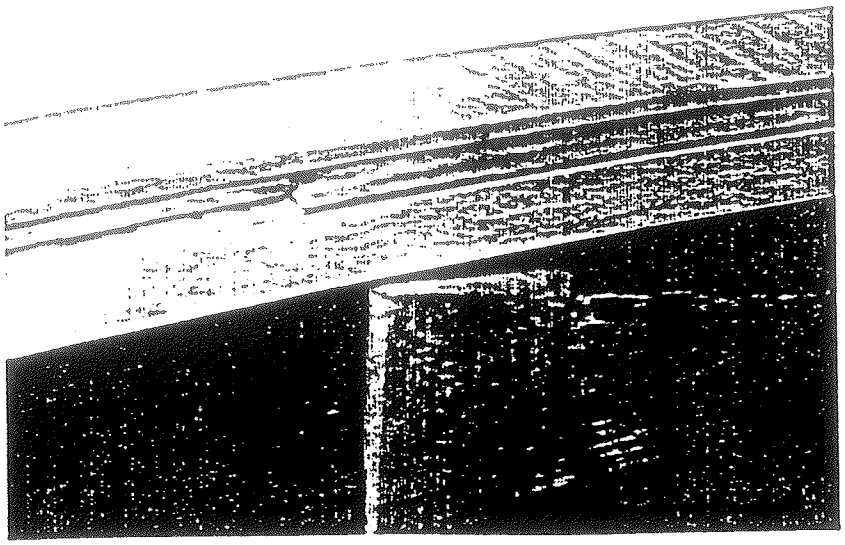

3
START FOR
WINDING

SDC COIL WINDING R&D (1)

Fig 7-4

Field Counter Map

FLUX LINE

PMIN= 0.000E+00 PMAX= 0.311E+03
CMIN= 0.000E+00 CMAX= 0.320E+03 CSTEP= 0.500E-01 NCNR= 17

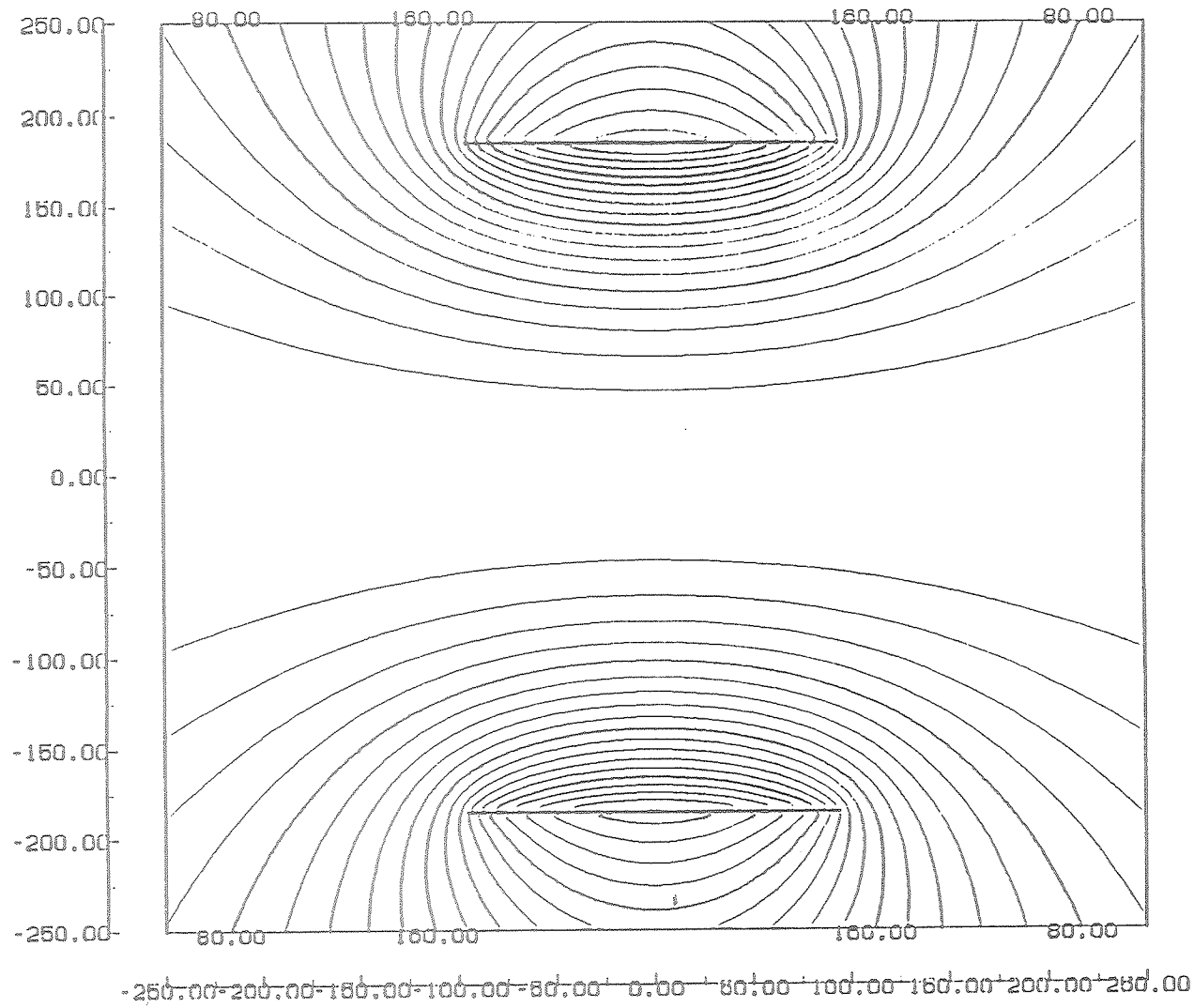

Fig 7-5

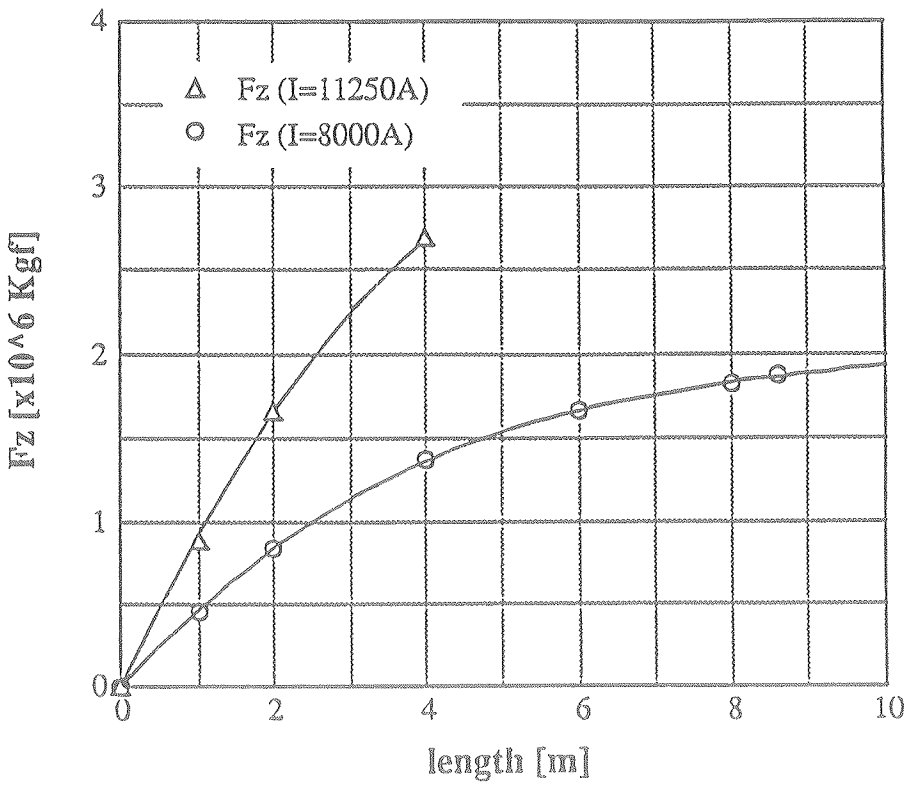
Fz (I=11250A)
Fz (I=8000A)
Fz [x10^6 Kgf]
length [m]
0
1
2
3
4
0
2
4
6
8
10

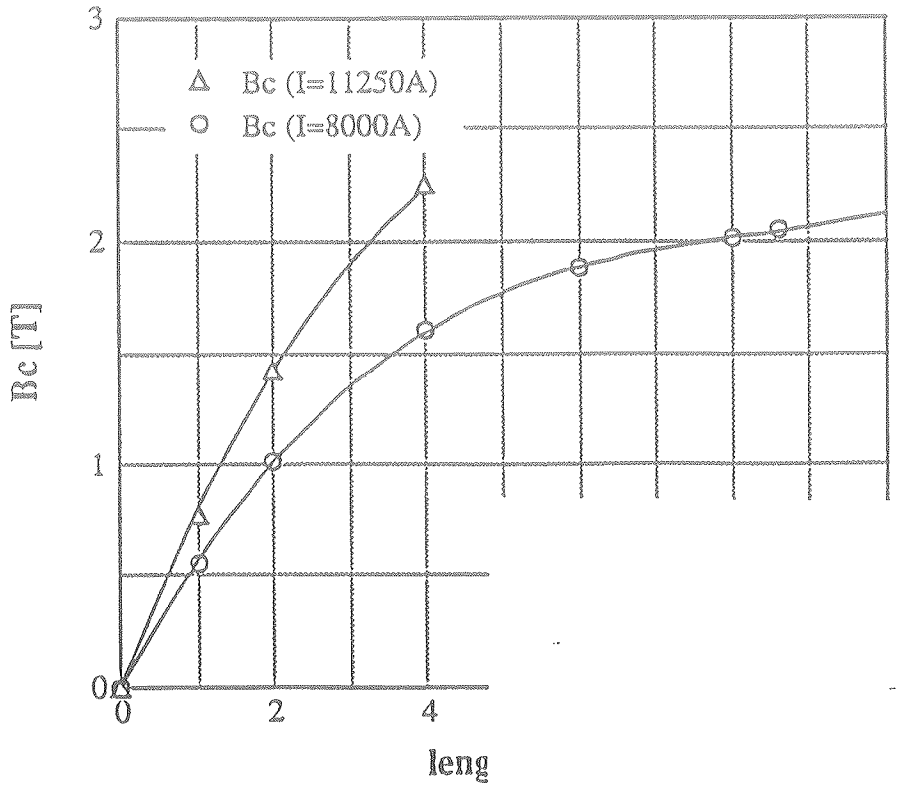
Bc (I=11250A)
Bc (I=8000A)
Bc [T]
leng
0
1
2
3
0
2
4

Fig. 7. 6

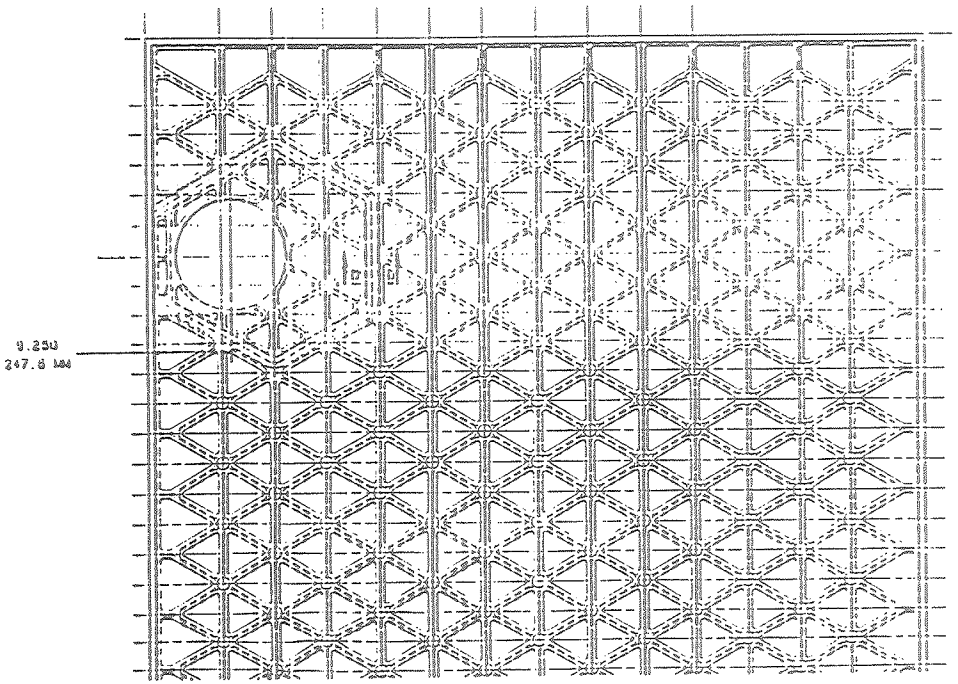

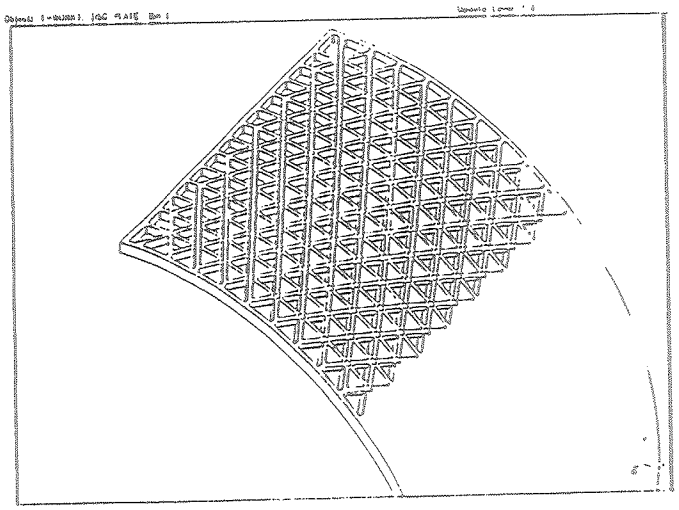

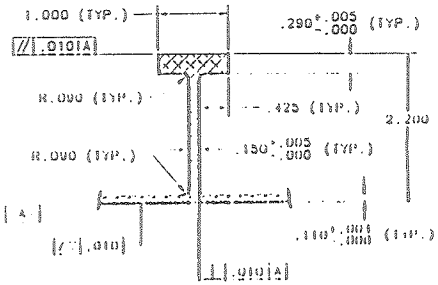

SECTION B-B
SCALE: 1:1

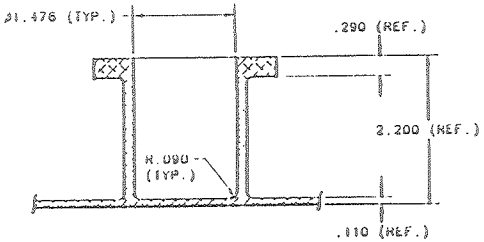

SECTION C-C
SCALE: 1:1

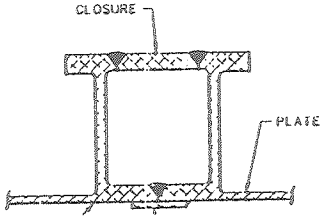

Fig. 7-6.

Table 9-1. A plan for the schedule for development of the SDC thin solenoid.

Year	R&D ITEMS
JFY1990 (Apr. / 90 -)	Basic R&D - High strength Al stabilized superconductor -.Inner winding technique
JFY1991 (Apr. / 91 -)	Prototype (1/4 L) Coil Development - Superconductor (6 km) fabrication - Coil inner - winding machine development
JFY1992	- Coil winding - Cryostat element
JFY1993	- Assembly of coil and cryostat - Cooling and excitation test - Evaluation and engineering design report
JFY1994	Main Magnet Fabrication - Superconductor (25 km) - Cryostat element
JFY1995	- Coil winding - Magnet assembly
JFY1996	- Cool - down and excitation test in air - Transportation to SSCL - Installation into the SDC detector iron structure
JFY1997	- Cool - down and excitation test in iron - Field measurement