Fermilab

# SDC SOLENOID DESIGN NOTE #165

TITLE: Impact of the Hadron Calorimeter Absorber Choice on the Solenoid

AUTHOR: Bob Kephart

DATE: November 18, 1991

This design note consists of the viewgraphs that Bob Kephart presented at the SDC Calorimeter Group meeting at the SSCL on Nov 14, 1991.

WORK in Progress Report"

R Kephart Nov 14, 1991

# Impact of the hadron calorimeter absorber choice on the solenoid

## Many issues to consider:

Physics "Performance" issues

| (Field Uniformity) vs (Tracking) | (Calorimeter Performance) vs (absorber material + geometry) | (Muon |
|---|---|---|
| • Pattern recognition<br>• $\Delta P/p$ resolution<br>• Triggering<br>• Tracking volume vs uniformity (cost)<br>• Central field value | • Em hereticity, resolution<br>• e/h<br>• hadron resolution<br><br>Discussed by others ⇒ | • multiple Scatteri<br>Fe vs Pl<br>• flux rei geome |

I will focus on Coil Engineering issues. (Particularly on Iron geometry vs Coil design)

# Coil Engineering issues (Fe/Pb + Geometry)

## 1) Electromagnetic Forces on Coil

a) Compressive force { function of $B_r$'s

b) Radially outward forces { function of $B_z$ }

① Support cylinder stress levels

- hoop stress $\propto \frac{B^2 r}{(2\mu_0) t}$
- axial stress*

} Total stress

② Conductor stresses

- hoop
- axial*

} Total stress*

③ Conductor / support cylinder Epoxy Joint str

c) decentering forces

① axial*

② radial* ( centering vs decentering
magnitude vs cold mass )

* = Depends upon choice and geometry of absorber materi

what if there is no Iron near the end of the current sheet?

≃ HAC1 = Pb
≃ LA CASE

⇒
- Non uniform field
- compressive force on coil ≃ 1700 T
- small decentering forces <5

magnetic field contour of $B_z$ (weigh

Type 1, (r,z/2)=(1.7m,4.0m).

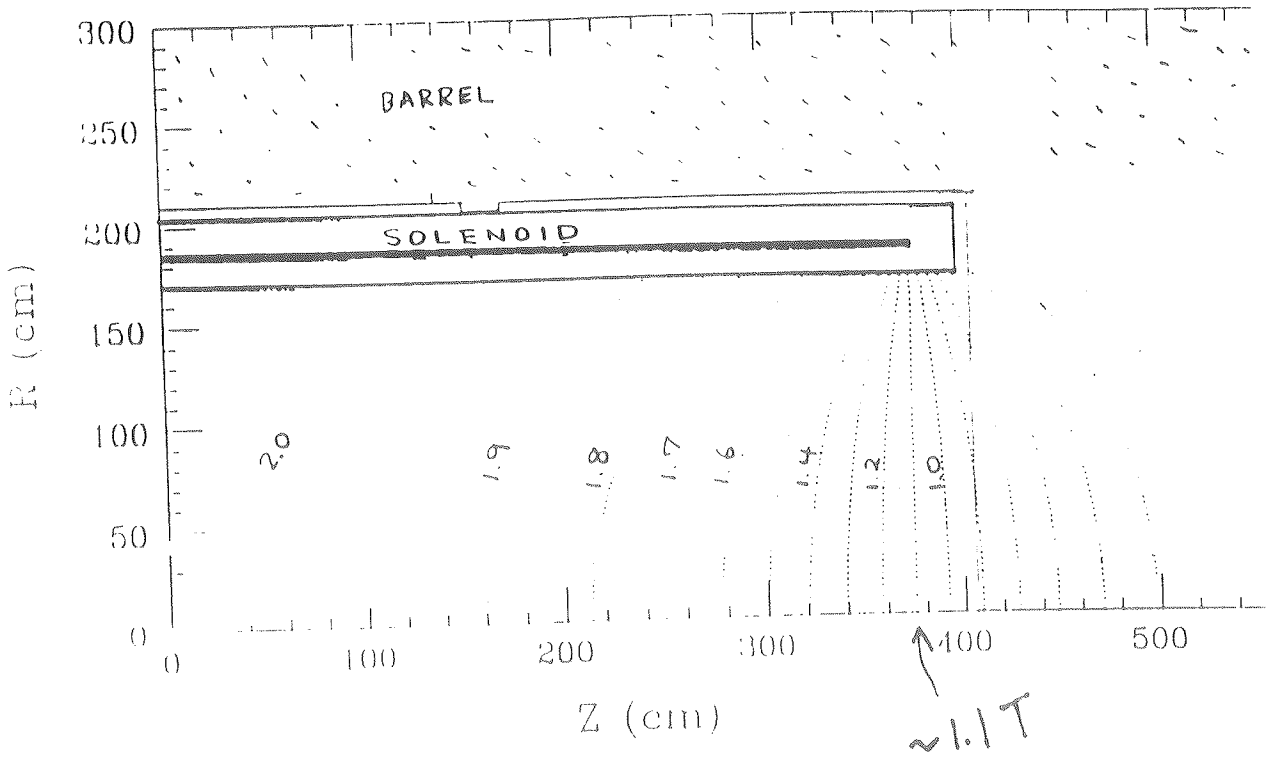


Engineering Issues

material R+D → 1) high conductor stresses (≥ yield of available high RRR Al

Process R+D → 2) reliance on conductor/support cylinder epoxy b

3) must build ~ full diameter prototye coil. To evaluate the design. (If problems occur what will we do?) ≡ RISK

4) "cleanest" solution from a Tracking/Calorimetry geometry viewpoint

FIAT Endwall

HAC-1 = IRON

(9)

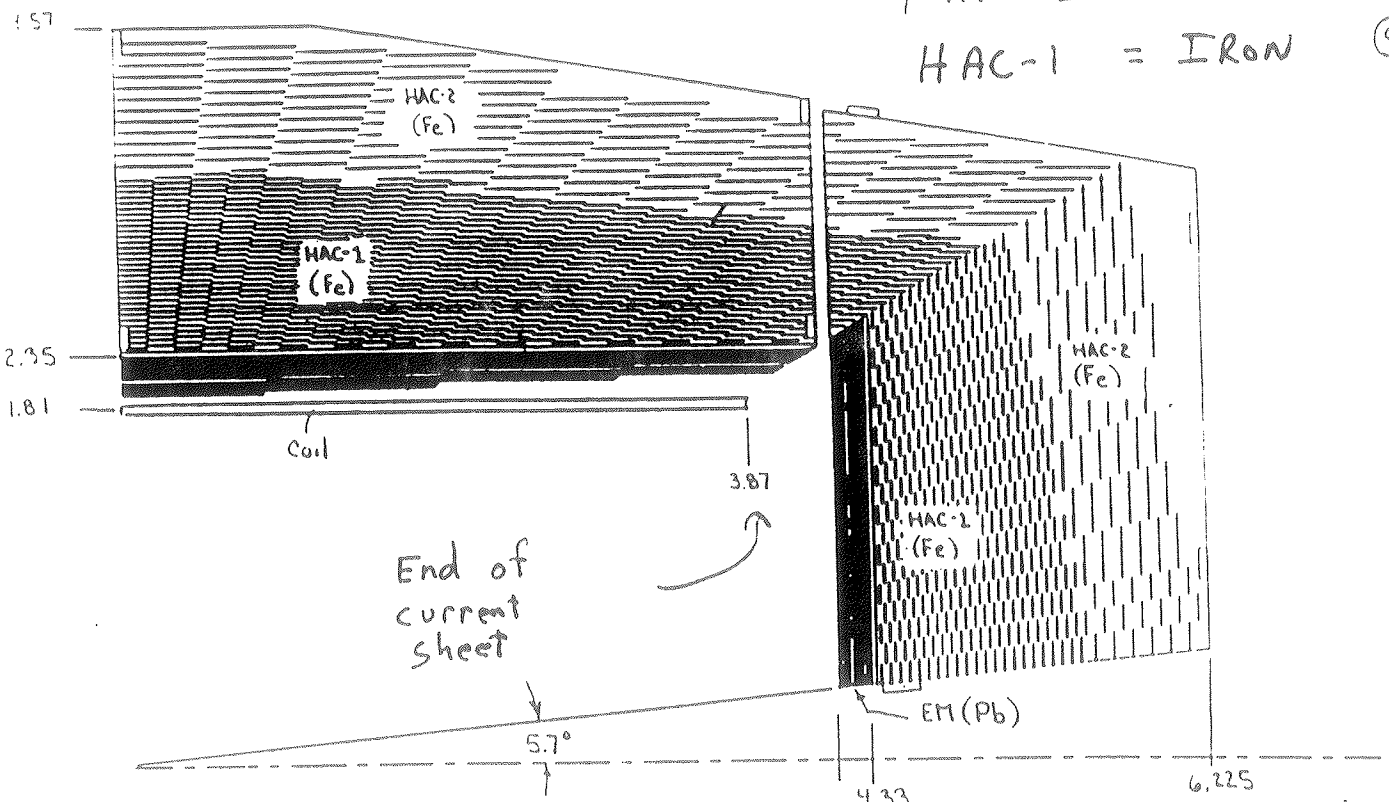


Fig. 1. Iron HAC1 Geometry

STUDY what happen as we move this boundry

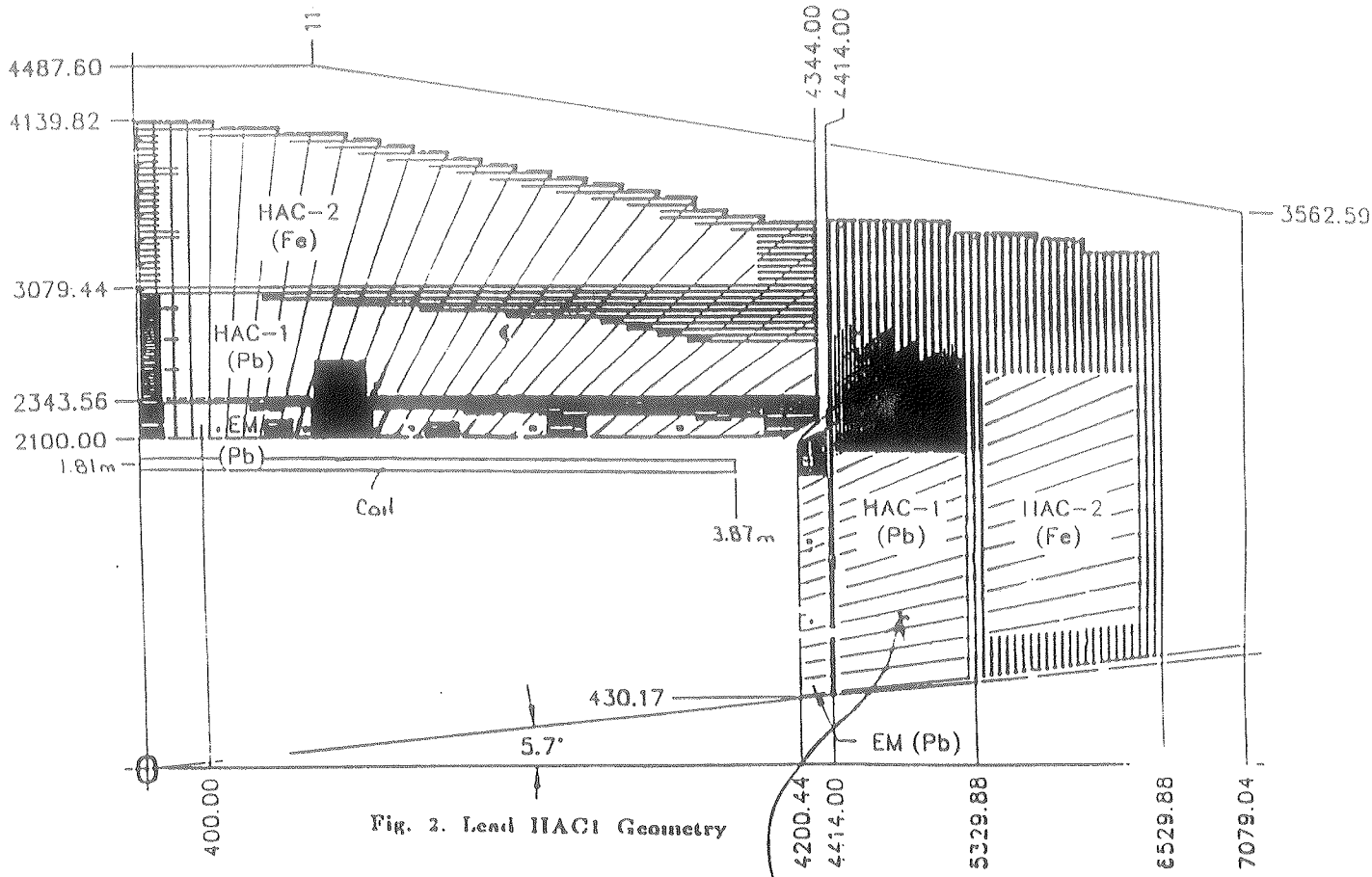


Fig. 2. Lead HAC1 Geometry

Fig 2-1

~ LA CASE

# Refined ANSYS Generic Models

Purpose: To study the effect of barrel and endplug proximity on the coil compressive and decentering forces. With 20 cm reentrant endplug, model corresponds to that used by Bill Foster in EGS simulation.

Approach: ANSYS 2-d axisymmetric finite element model, vector potential formulation

Endplug: Modeled as iron/scint, with hac1 and hac2 regions based on Fermilab calorimeter conceptual design. Iron and air modeled as discrete finite elements

Barrel: Modeled as iron/scint, with hac1 and hac2 regions based on Fermilab calorimeter conceptual design. Iron and air modeled as discrete finite elements

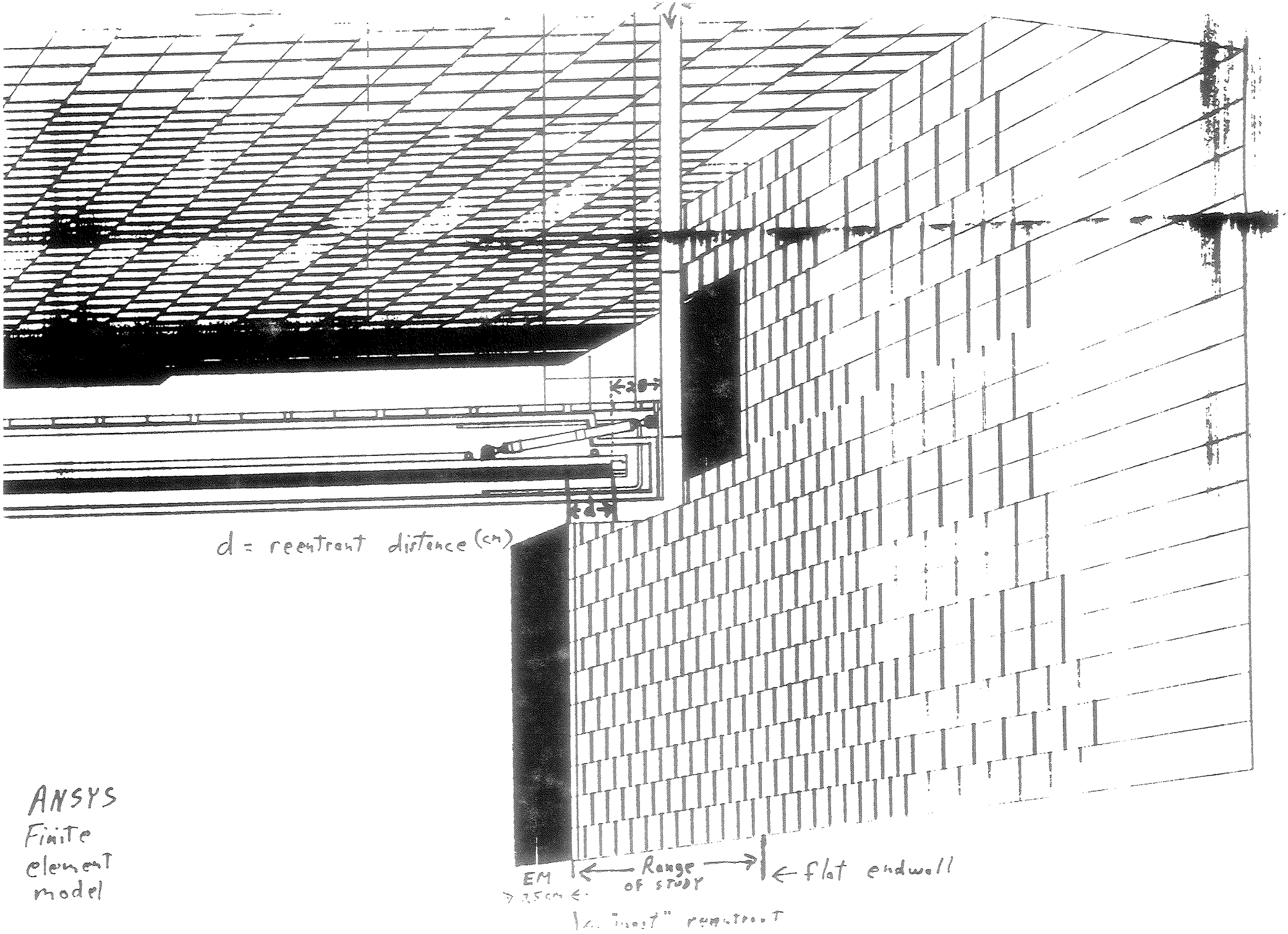


ANSYS
Finite element model

Other Features of the "Generic" ANSYS Finite element MODEL (Bob WANDS)

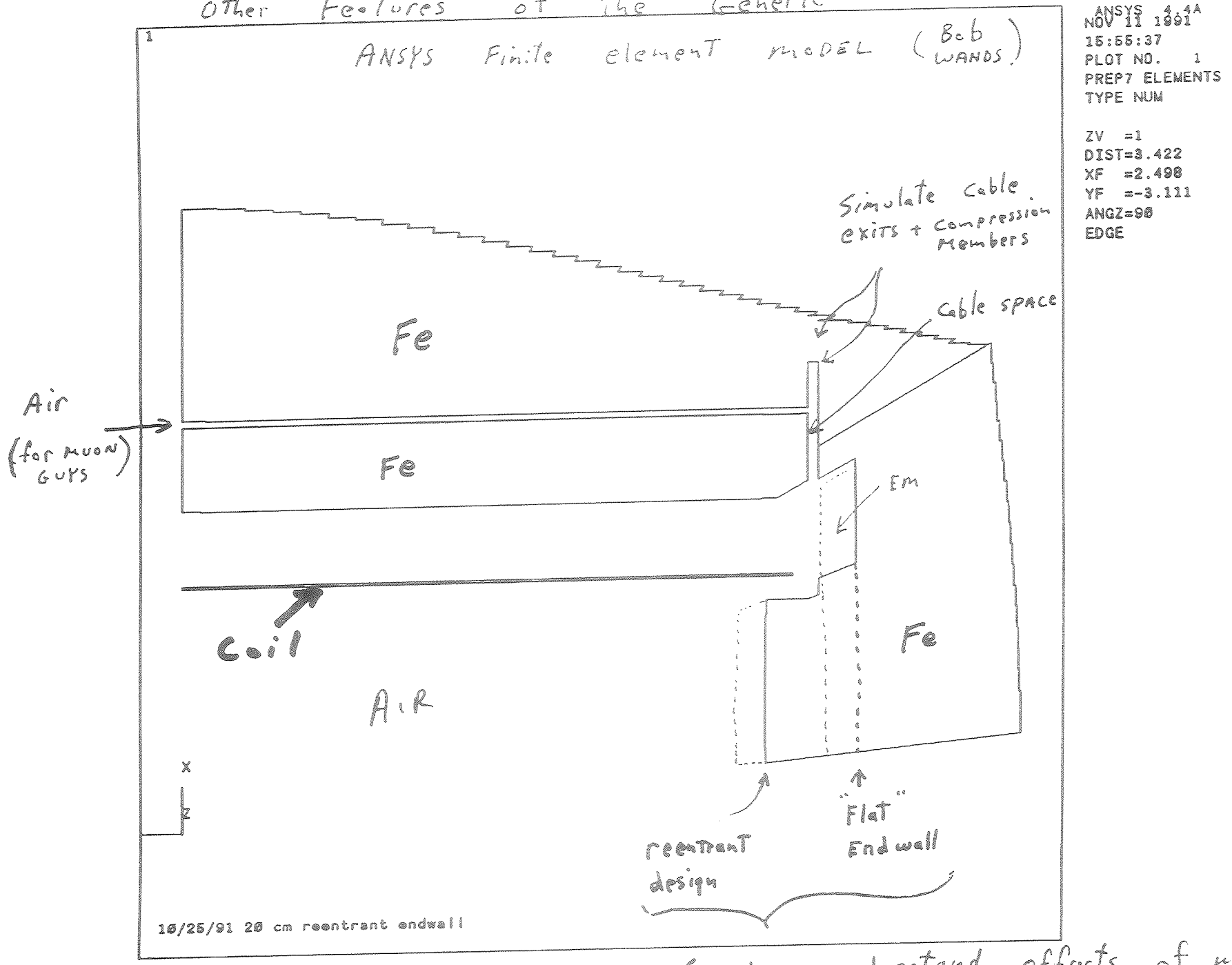


Goal = understand effects of moving

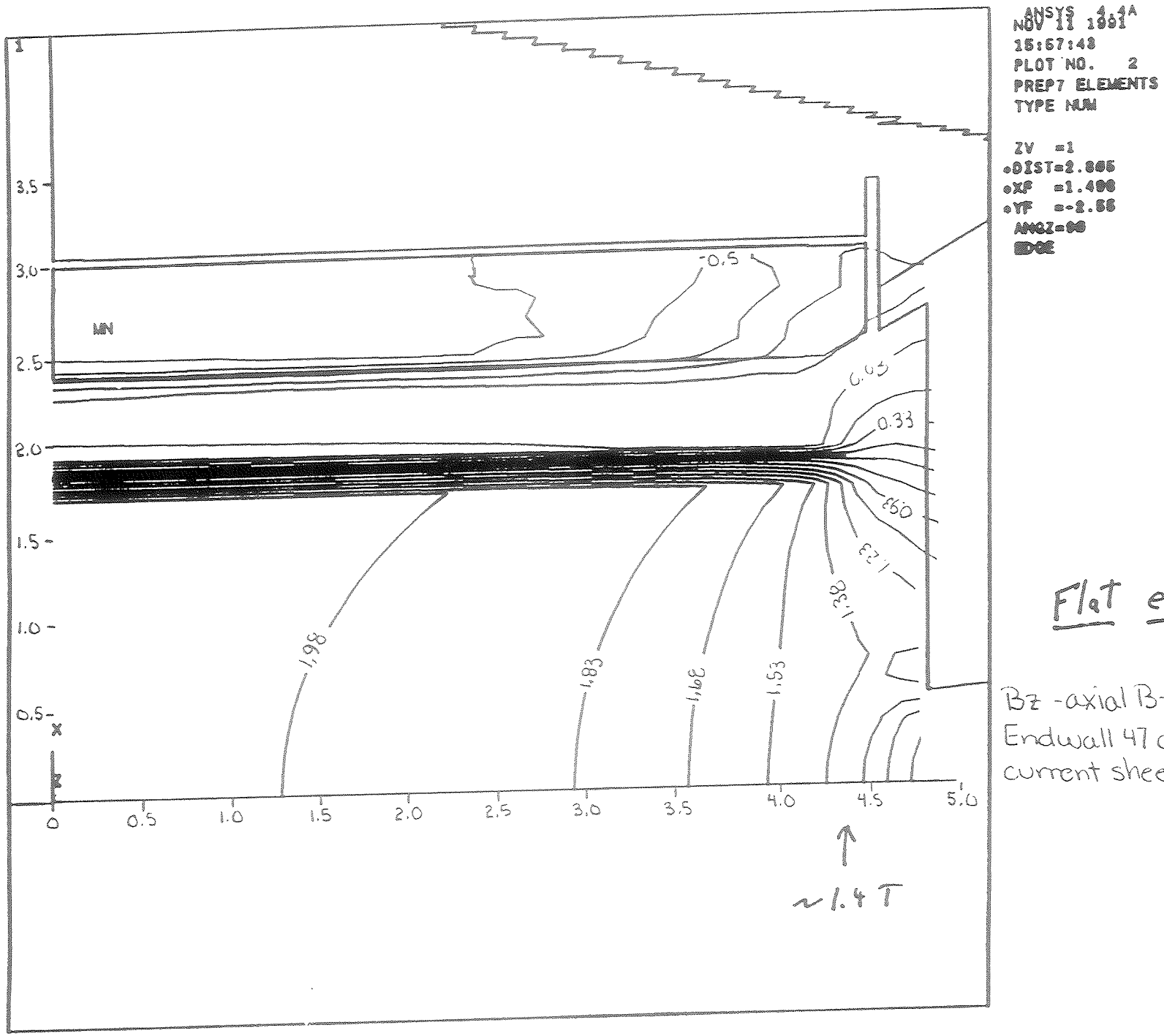


Flat endwall

Bz -axial B-field
Endwall 47 cm beyond current sheet

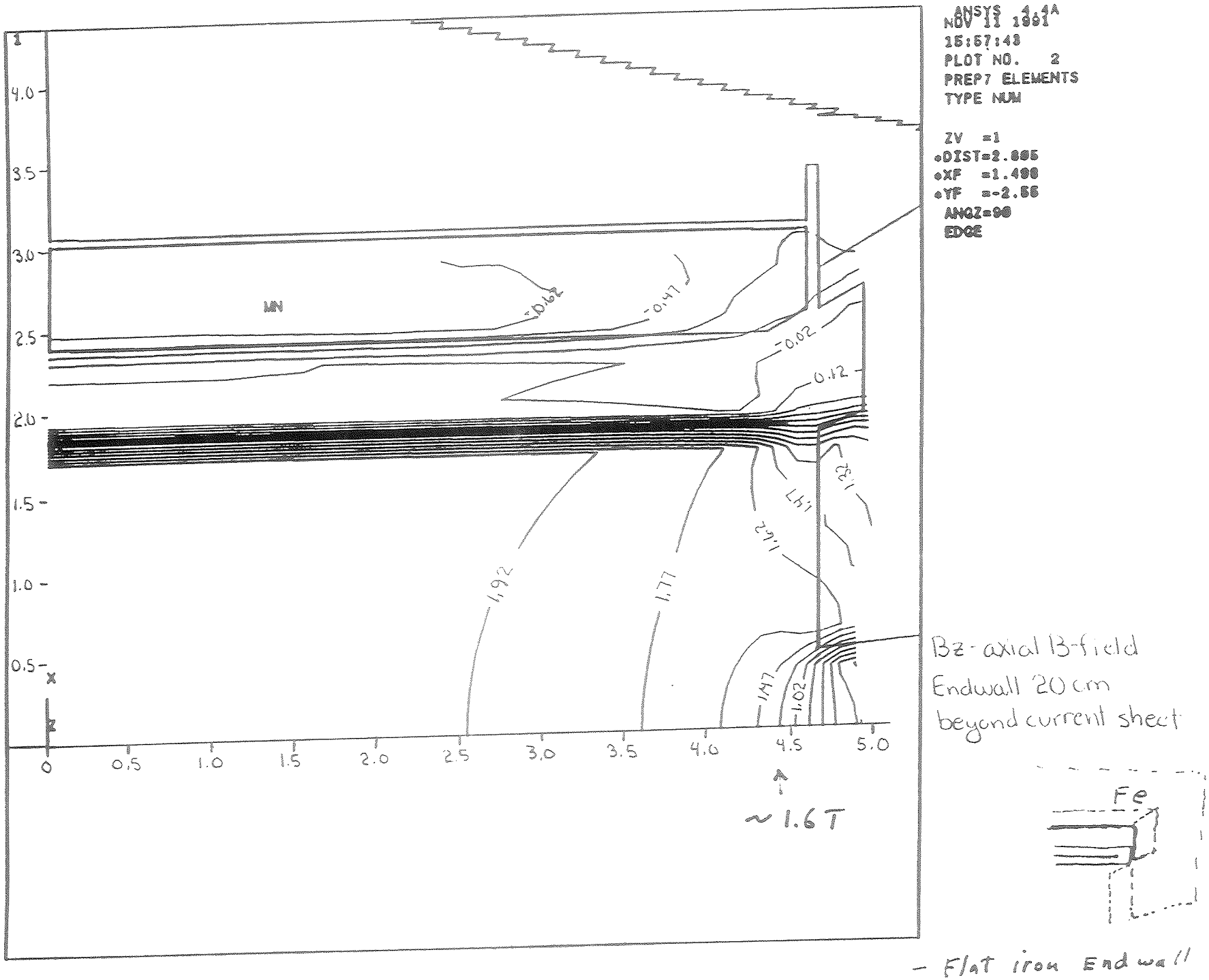


Bz - axial B-field
Endwall 20 cm
beyond current sheet

- Flat iron Endwall

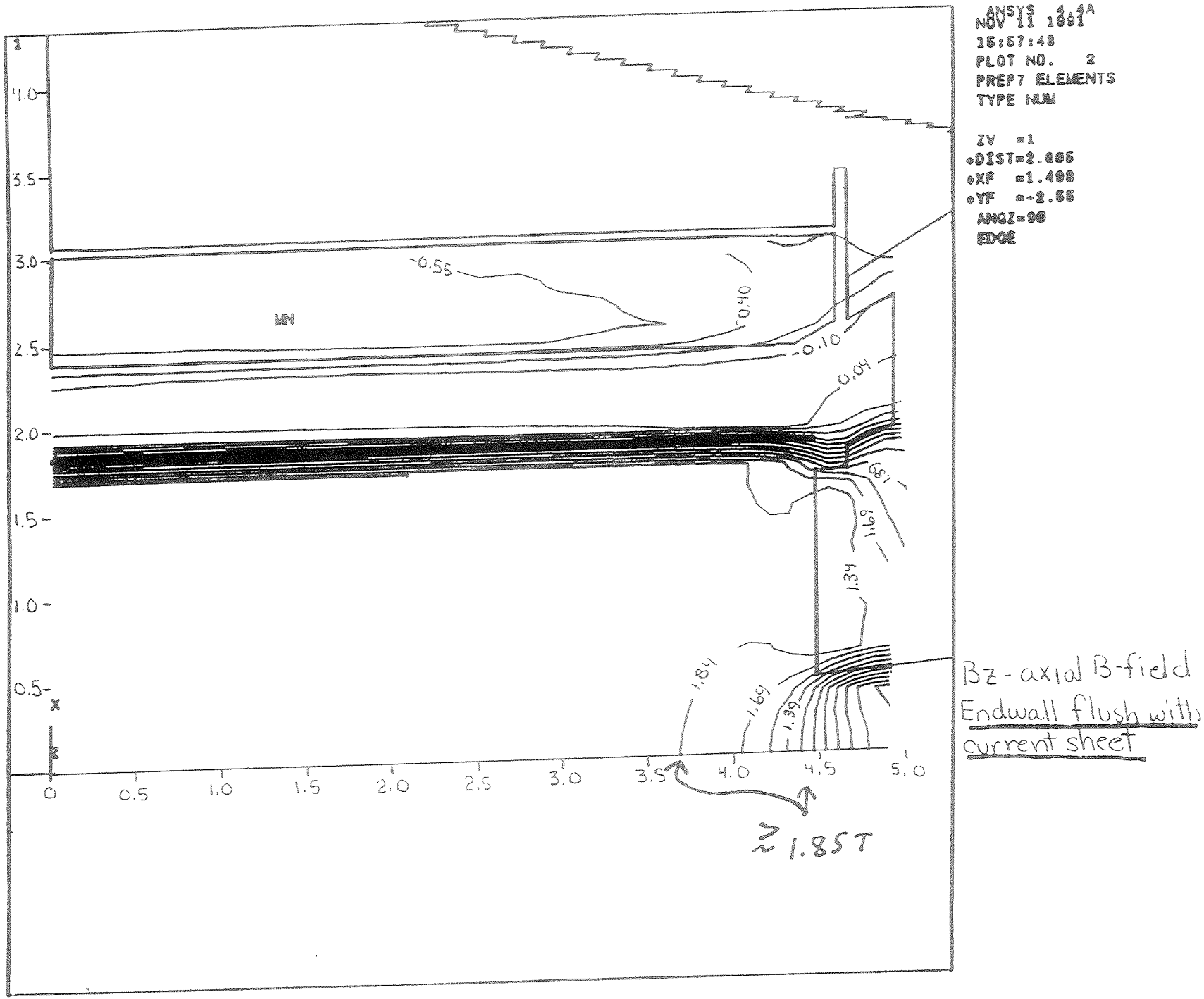
ANSYS 4.4A
NOV 11 1981
15:57:43
PLOT NO. 2
PREP7 ELEMENTS
TYPE NUM
ZV =1
*DIST=2.885
*XF =1.498
*YF =-2.55
ANGZ=90
EDGE
-0.55
-0.40
-0.10
0.04
1.39
1.69
1.34
1.84
1.69
1.39
MN
Bz - axial B-field
Endwall flush with
current sheet
≳ 1.85T

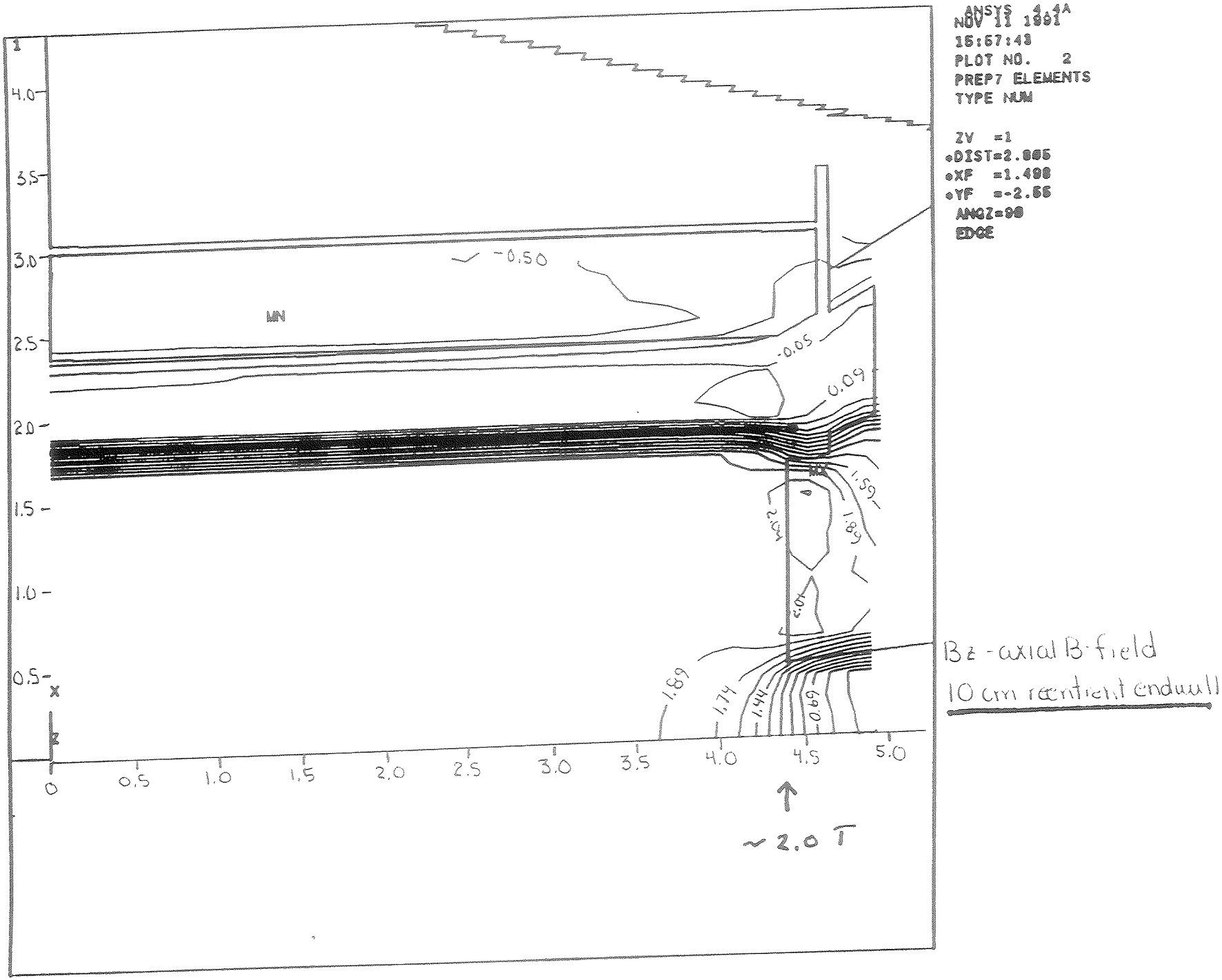
ANSYS 4.4A
NOV 11 1981
15:57:48
PLOT NO. 2
PREP7 ELEMENTS
TYPE NUM
ZV =1
*DIST=2.865
*XF =1.498
*YF =-2.55
ANGZ=90
EDGE
-0.50
MN
-0.05
0.09
1.59
1.89
2.04
2.07
1.89
1.74
1.44
0.69
4.0
3.5
3.0
2.5
2.0
1.5
1.0
0.5
0
0.5
1.0
1.5
2.0
2.5
3.0
3.5
4.0
4.5
5.0
~2.0 T
Bz - axial B-field
10 cm reentrient endwall

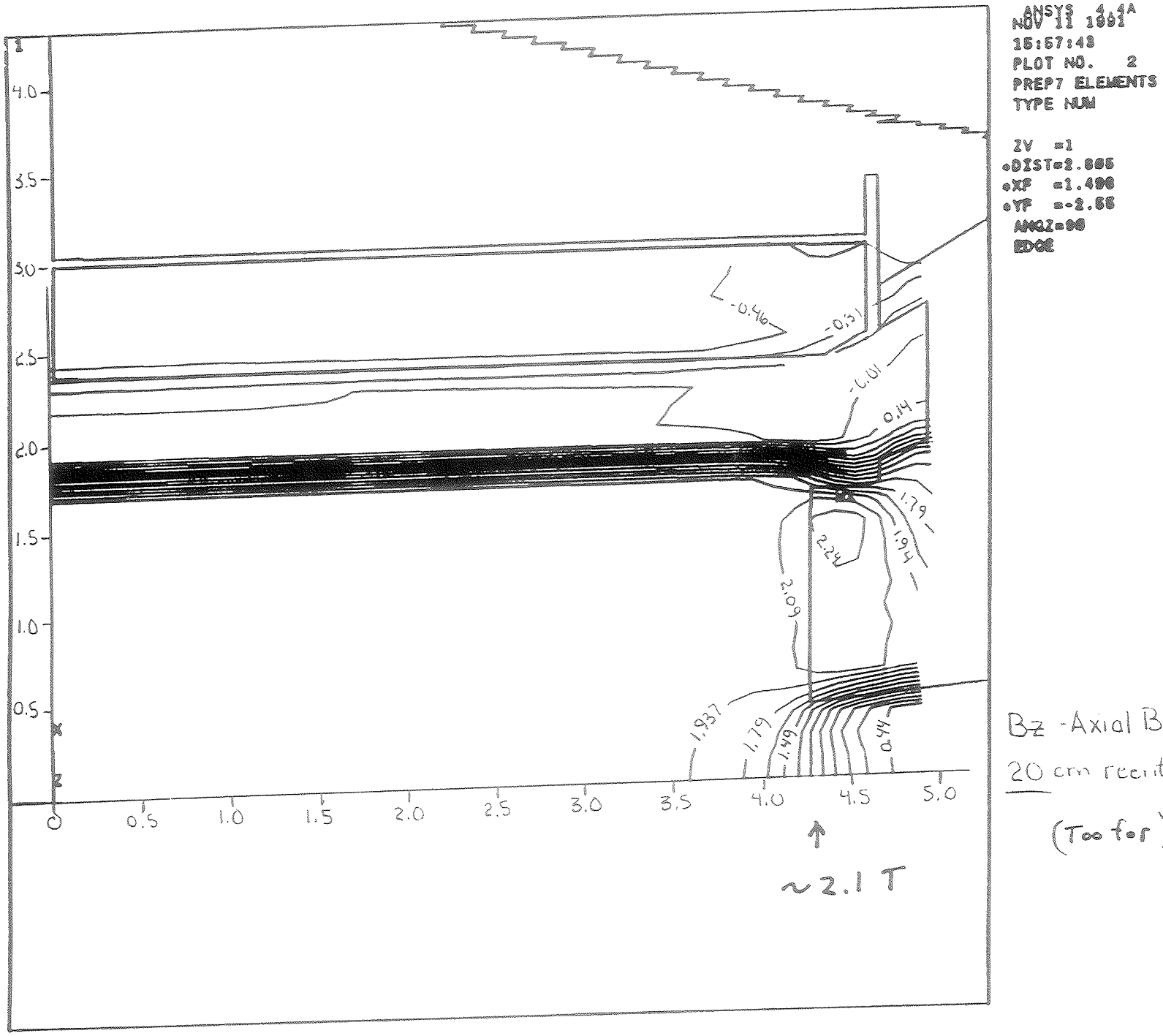


Bz - Axial B-field

20 cm reentrant endwall

(Too for)

(7A)

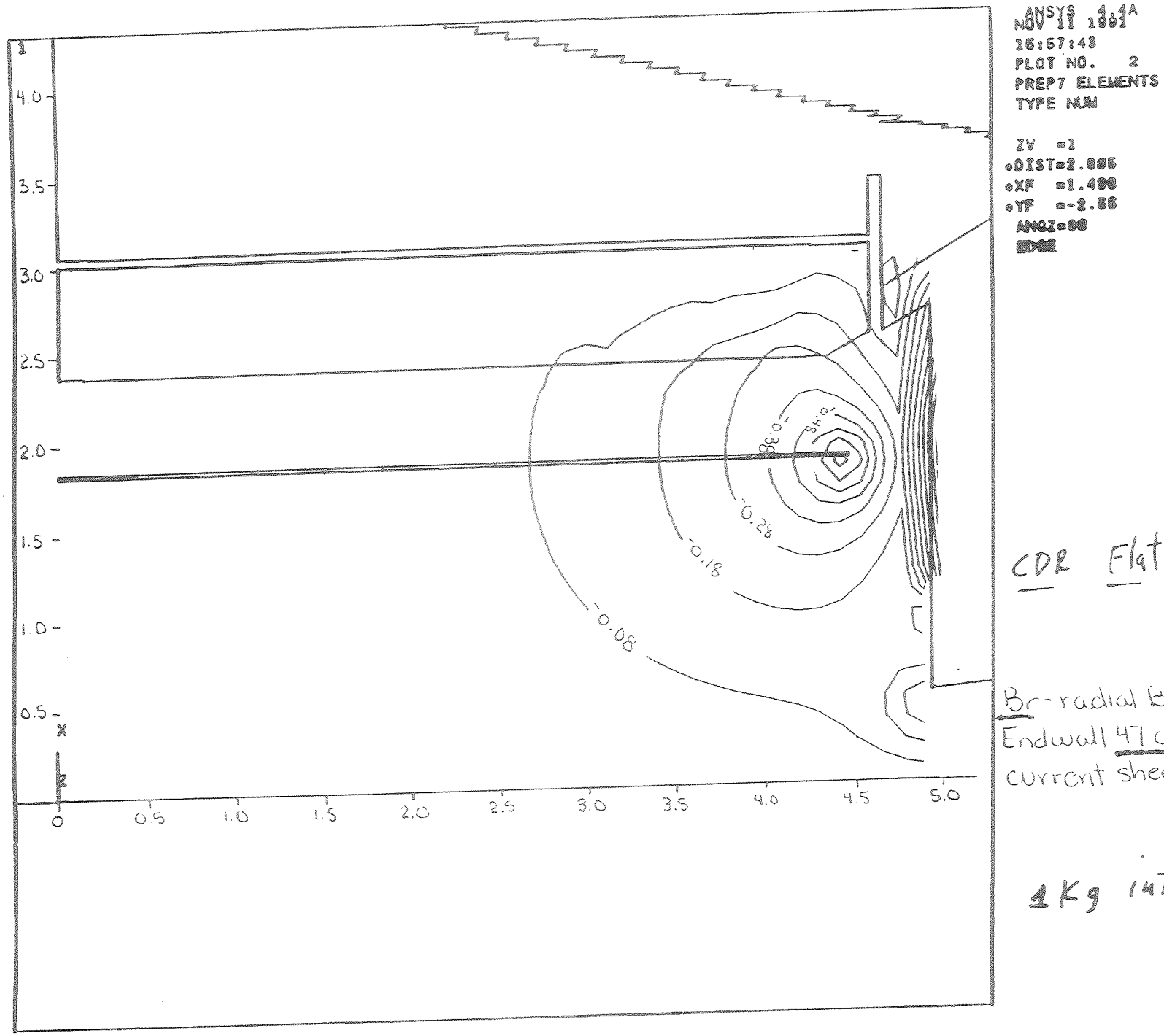


CDR Flat ENDWALL

Br - radial B-field
Endwall 47 cm beyond
current sheet

1 Kg intervals

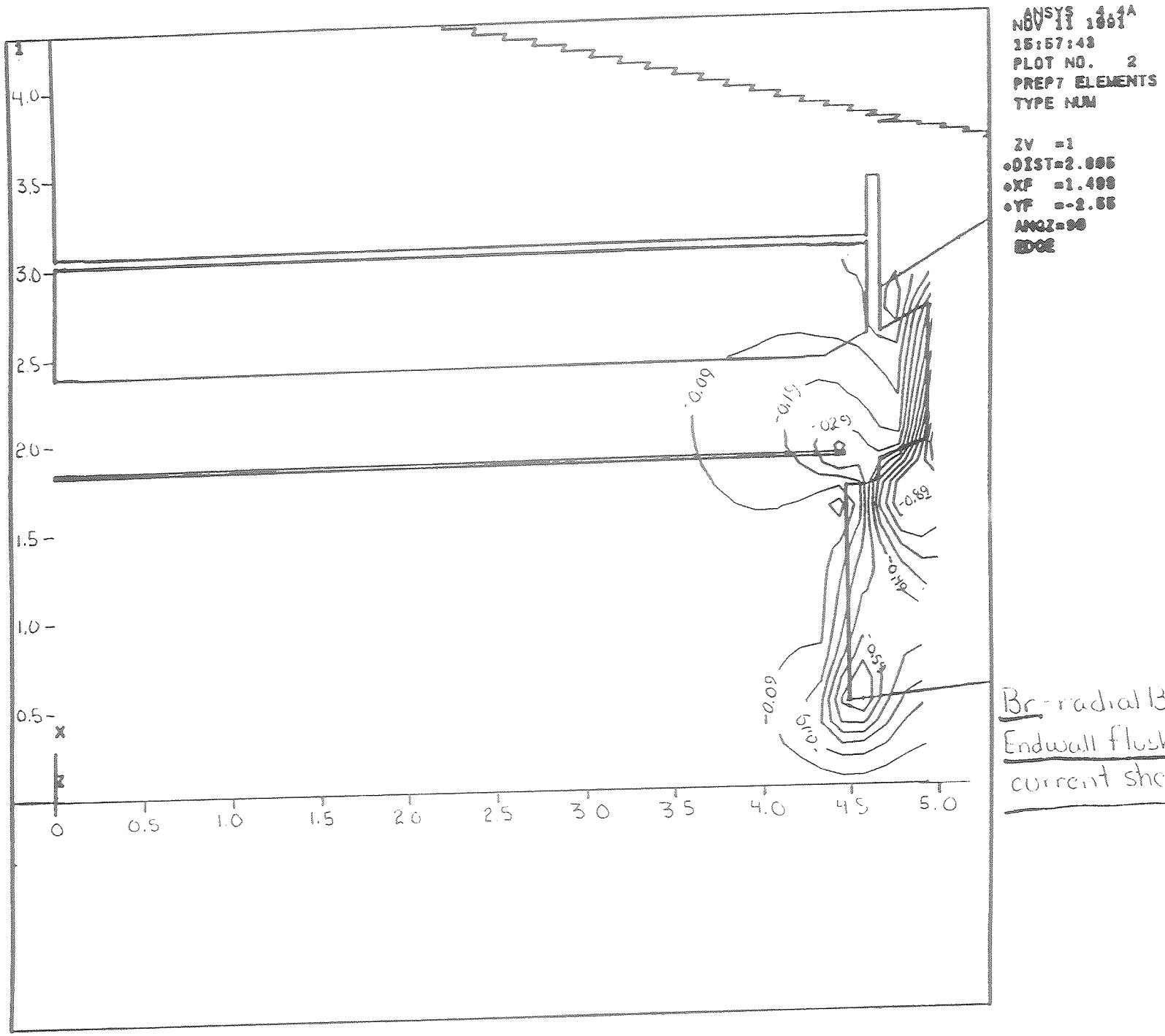


Br - radial B-field
Endwall flush with
current sheet

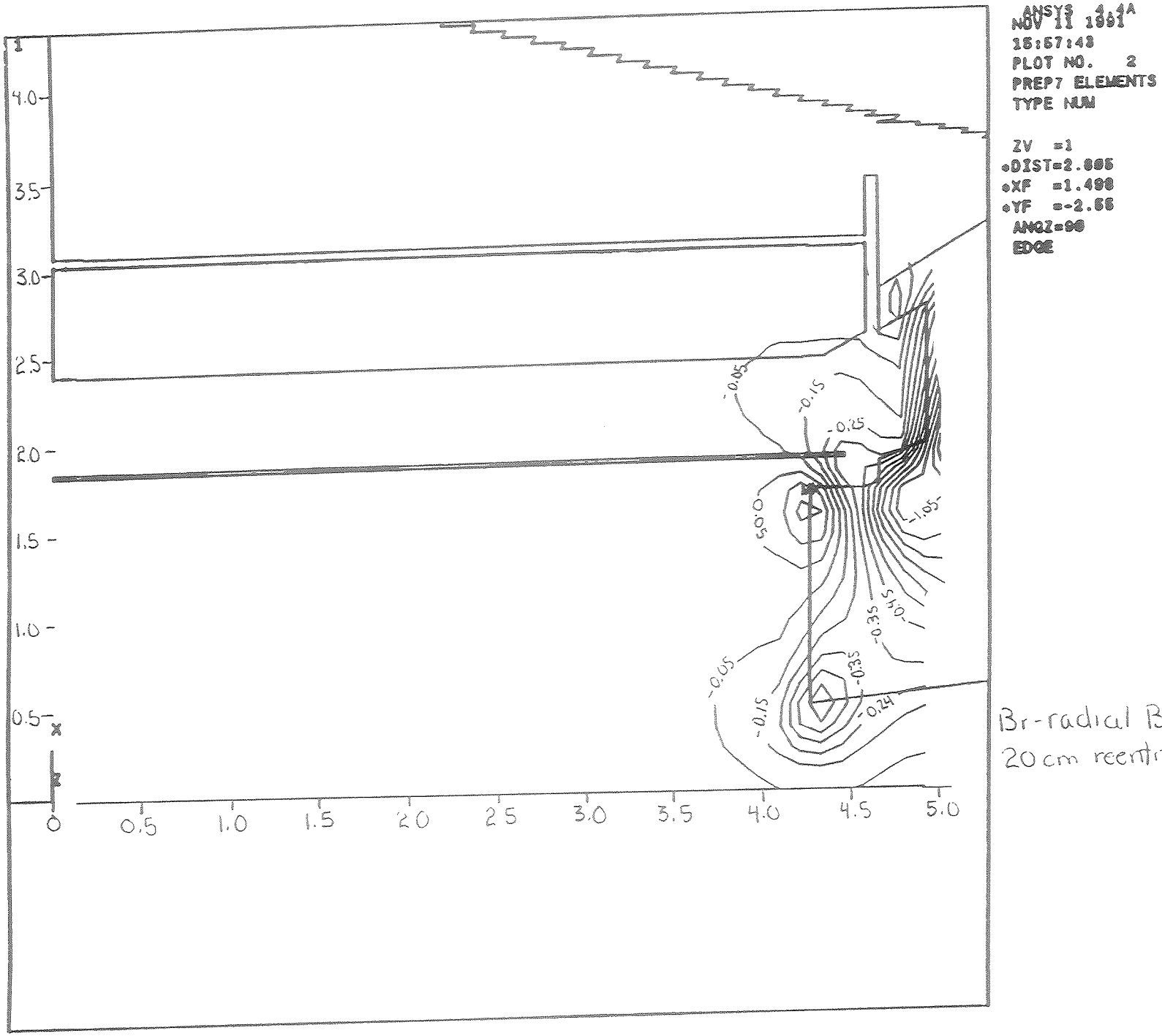


Br-radial B-field
20 cm reentrant endwall

So why do I care about Iron location? Answer: Coil forces + stress levels (more on this)

# Coil Force vs Central Field

## for 20 cm reentrant endwall

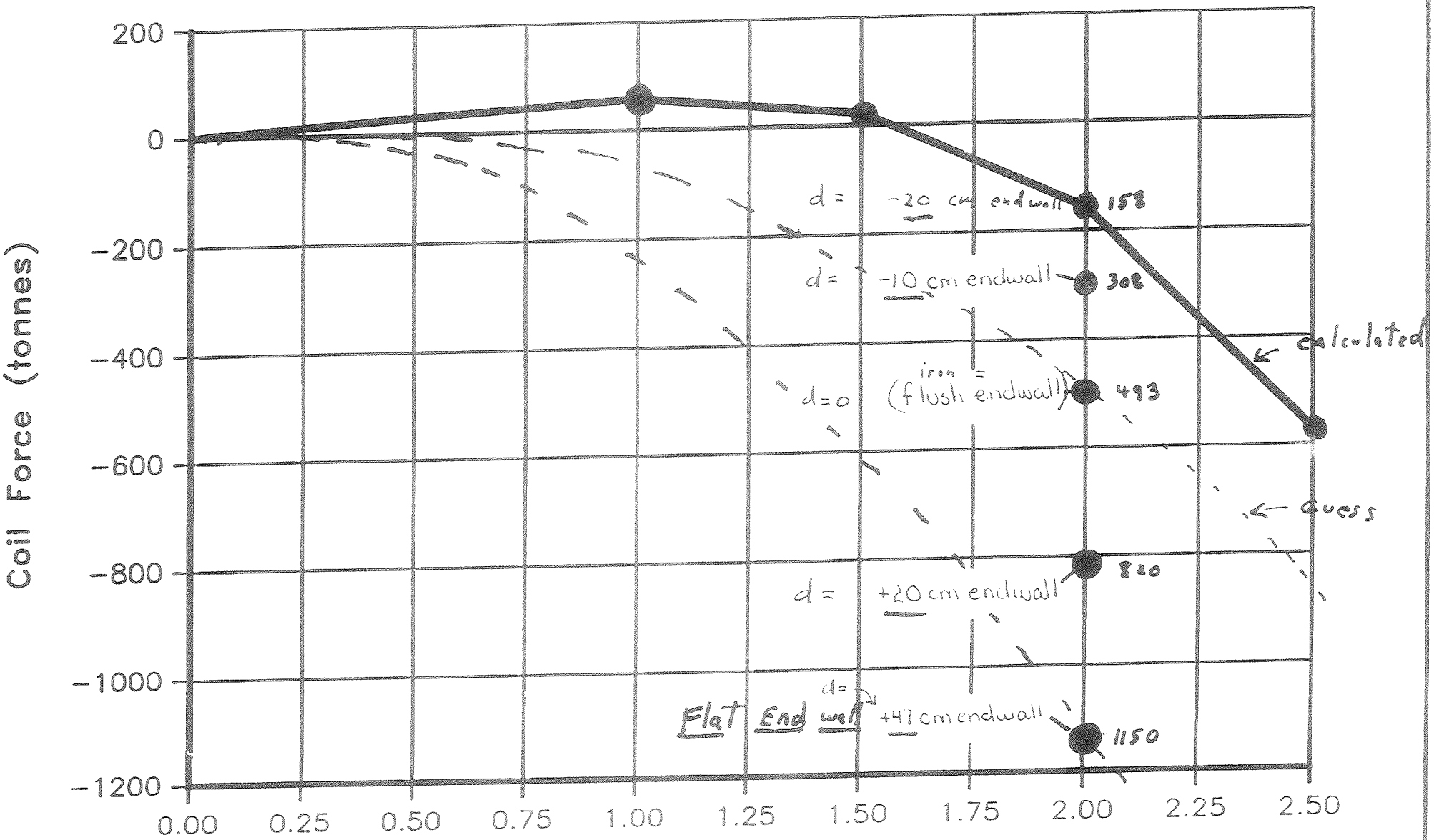


At fixed stress level in the coil

so what are the estimated stress levels in the coil? (eg for No Iron ⇒ $F_{coil}$ = 1700T)

conductor stress levels are ≃ 60 MPa

1 MPa = Kg/mm²

1 ATM = 0.1 MPa = 15 PSI



Table 3-6. Mechanical stability of the SDC coil.

| Element | Material | El. Limit | Hand Cal. | FEA | |
|---|---|---|---|---|---|
| Conductor | pure Al (3N8) | 9900 PSI 66 MPa | 59 MPa | 59 Mpa | 9000 PSI |
| Insulation | GFRP/KGEPP | >100 MPA | 30 | 30 | |
| Cylinder | A-5083 | 169 MPa | 59 MPa | 55 | |
| Cyl.. Bonding | Epoxy | (18 x 1/3) 6 | < 4 | < 1 | } reliability |

Table 3-4. Yield strength of pure Al as a function of RRR.

| RRR | Reduction | Y.S.(@77 K) | U.S. (@77 K) | Elogation |
|---|---|---|---|---|
| 626 | 0 | 31 MPa | 147 MPa | 53.7 % |
| 530 | 10% + cure | 76 | 155 | 42.6 |
| 485 | 10 % | 79 | 153 | 46.1 |

Note CDF, TOPAZ, etc solenoids were built with much higher purity Aluminum (RRR = 1850 for CDF)
⇒ sacrificed some stability for conductor strength, but still NOT Good enough for SDC's needs.
⇒ Develop New material for stabilizer.

_AN You make such a material? Yes

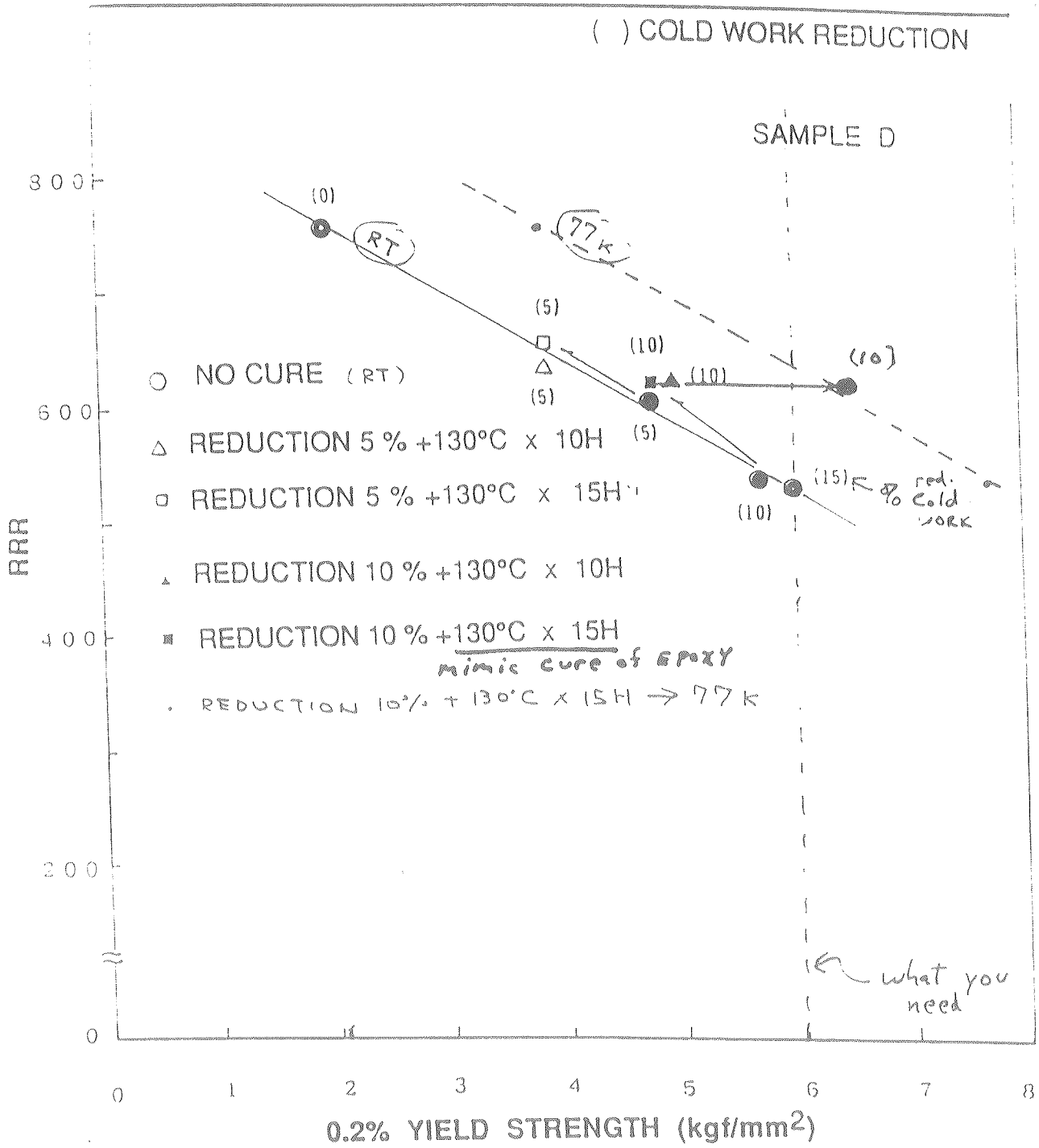


RRR v.s. Y/S in SAMPLE D ~200 PPM impurity

1) worry: can we control amount of cold work?

2) worry: can we reliably control the alloy?

3) worry: will it Room Temp anneal? etc

Fig. 7-2.

IT is a new material

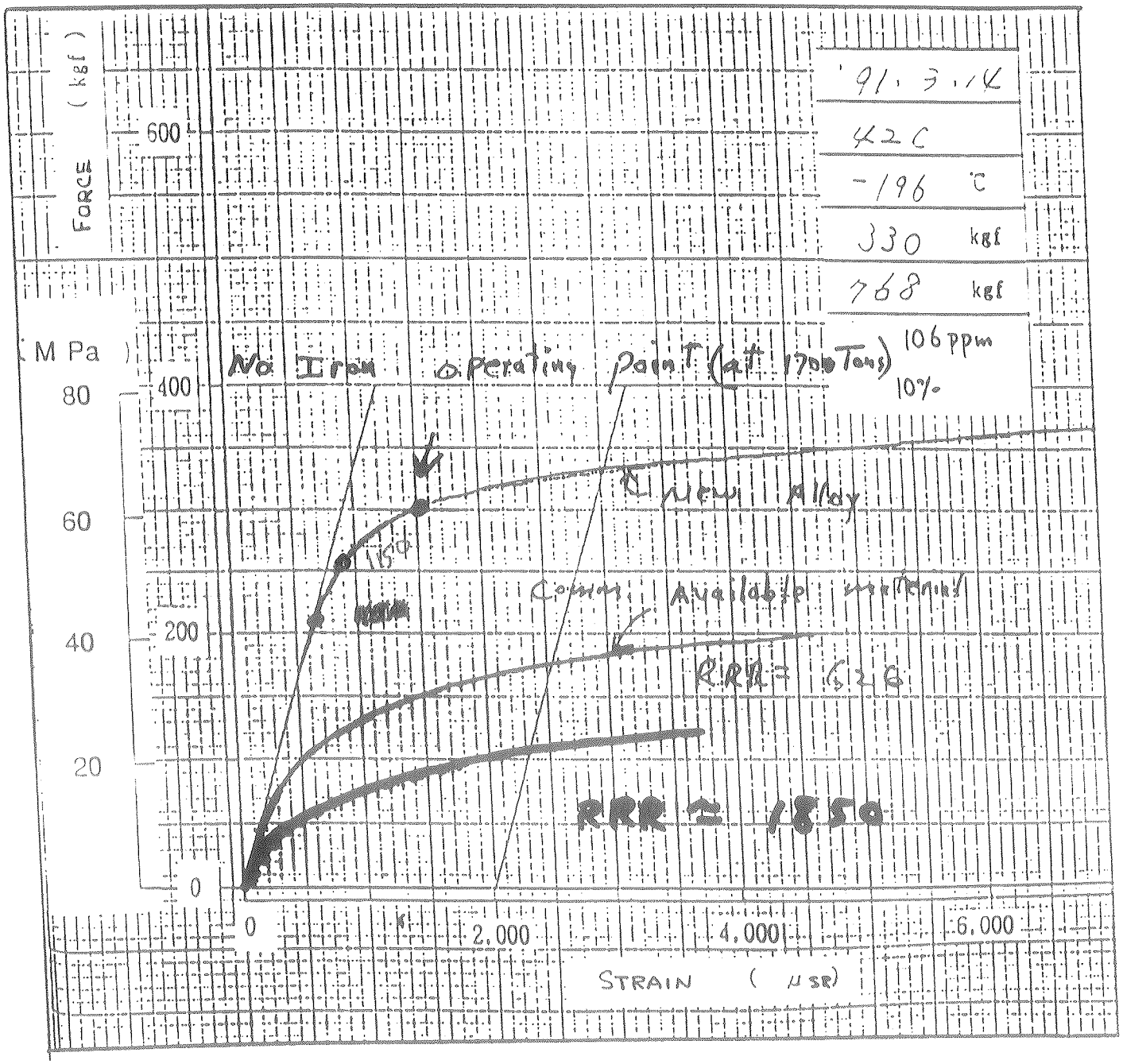


A STRESS- STRAIN CURVE OF HIGH STRENGTH PURE Al ( 4N )

Fig. 7-3.

EGGS — ok at "worst case" d = -20 cm reentrant design.

How badly does it screw up EM resolution hermeticity?

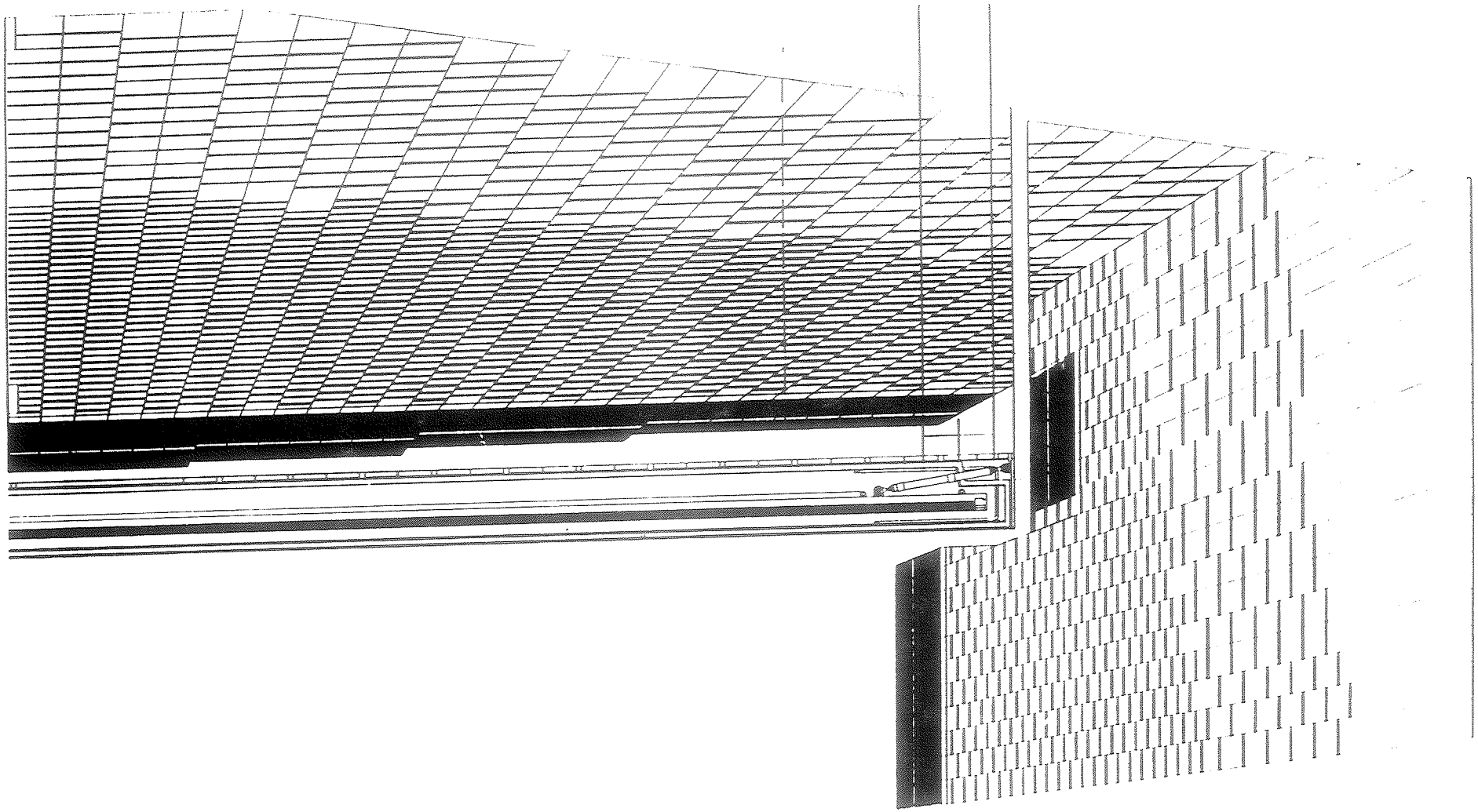

# HERMETICITY STUDY: FE/PB CHLORIMETER

what happens at edges ?

B = C

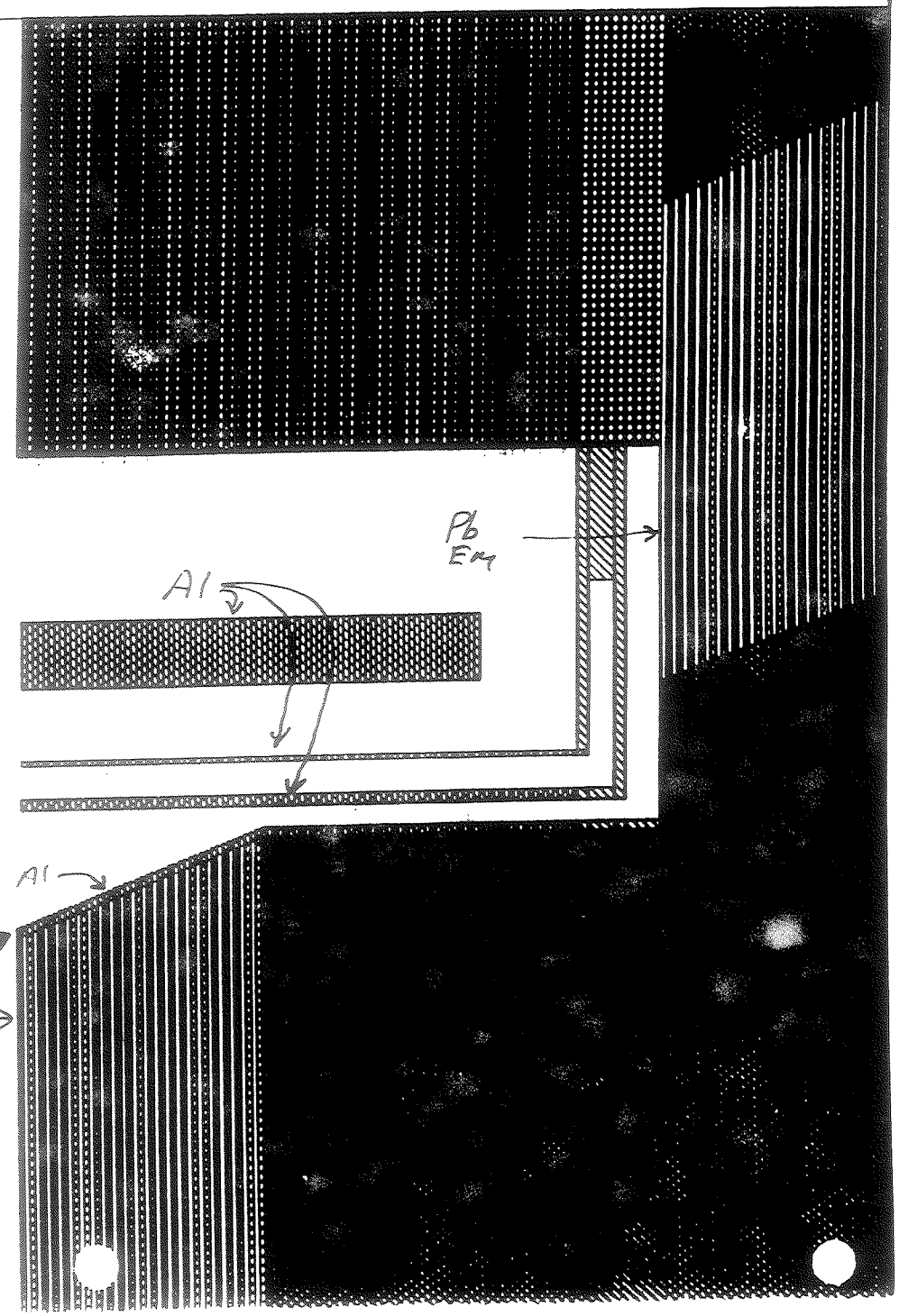

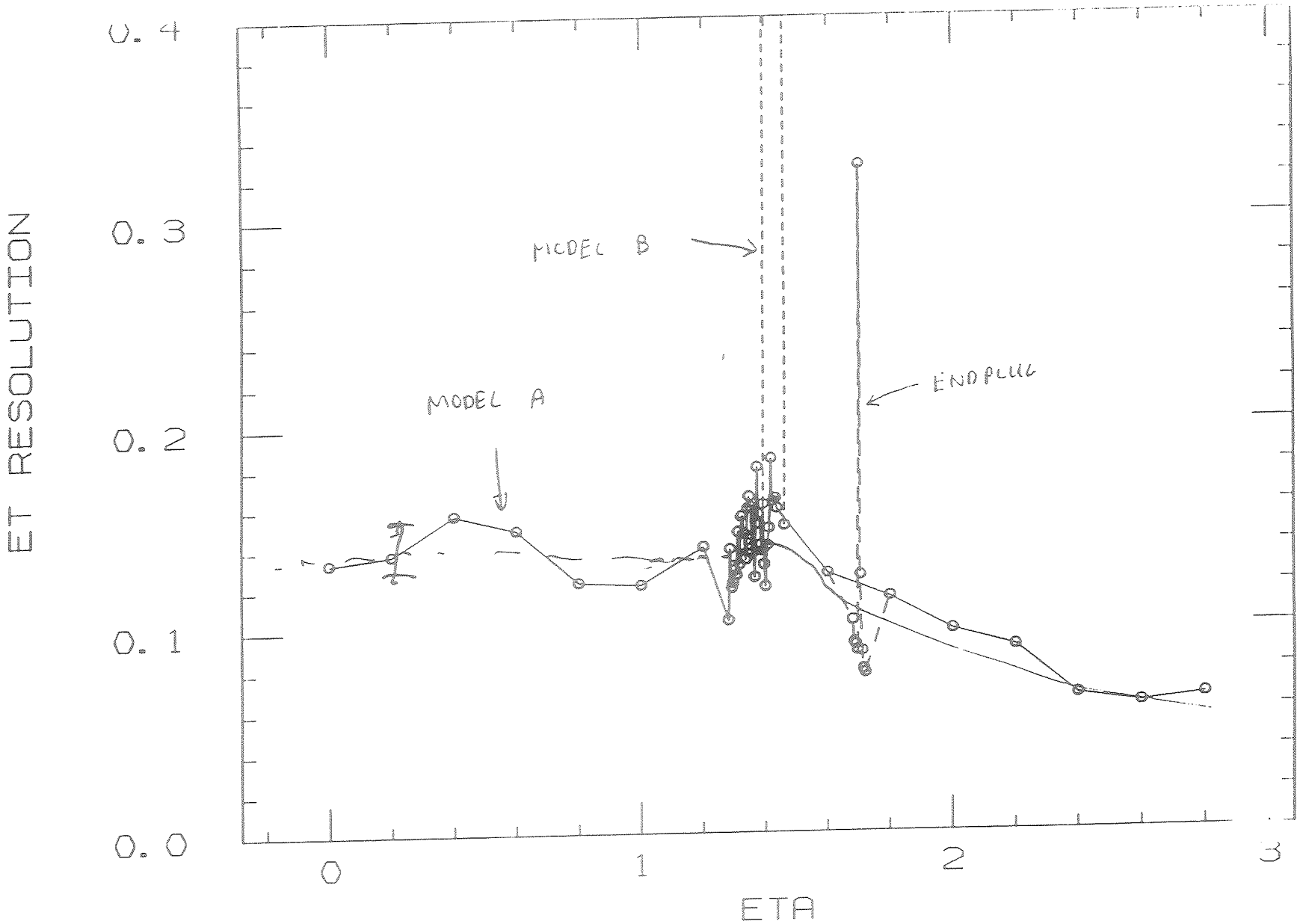
ET RESOLUTION
0.4
0.3
0.2
0.1
0.0
0
1
2
3
ETA
MODEL B
MODEL A
ENDPLUG

# ET RESOLUTION VS ETA

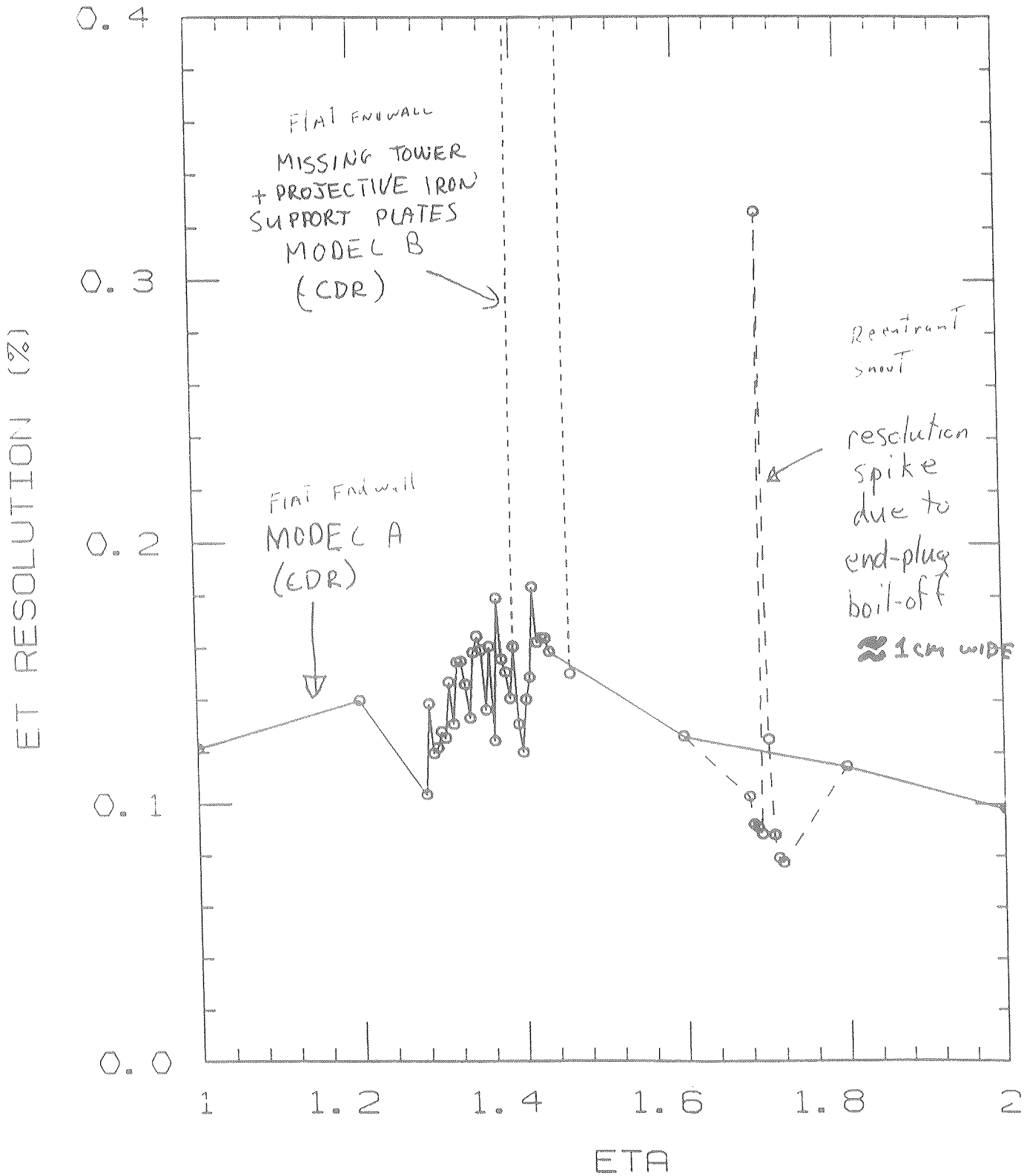


{Preliminary Result} Conclude That Edge has little effect on overall EM resolution + hermeticity [MARC TURKOT (:
GEANT, B ≠ 0

[But CDF! .... why? ANSWER = better des

# EM Decentering Forces

| | AXIAL | Radial |
|---|---|---|
| ~No Iron (HAC-1 = Pb) | < 5 T/20mm | < 5 T/20mm |
| d = 47, 20, 0, −10 } not done YET | | } Expected To be small |
| d = −20 cm reentrant | 76 T/20 mm | 5 T/20mm |

1 PRINCIPLE difference is the axial decentering force for the reentrant iron cases. (~2X CDI

2 NEW radial support requirements are determined by coil weight. for ~all designs

How much material is required for supports. (ie effects on EM calorimetry ... still under STUDY ... but Not a major problem)

# Radiation Length V.S. Pseudorapidity

for DFS support system

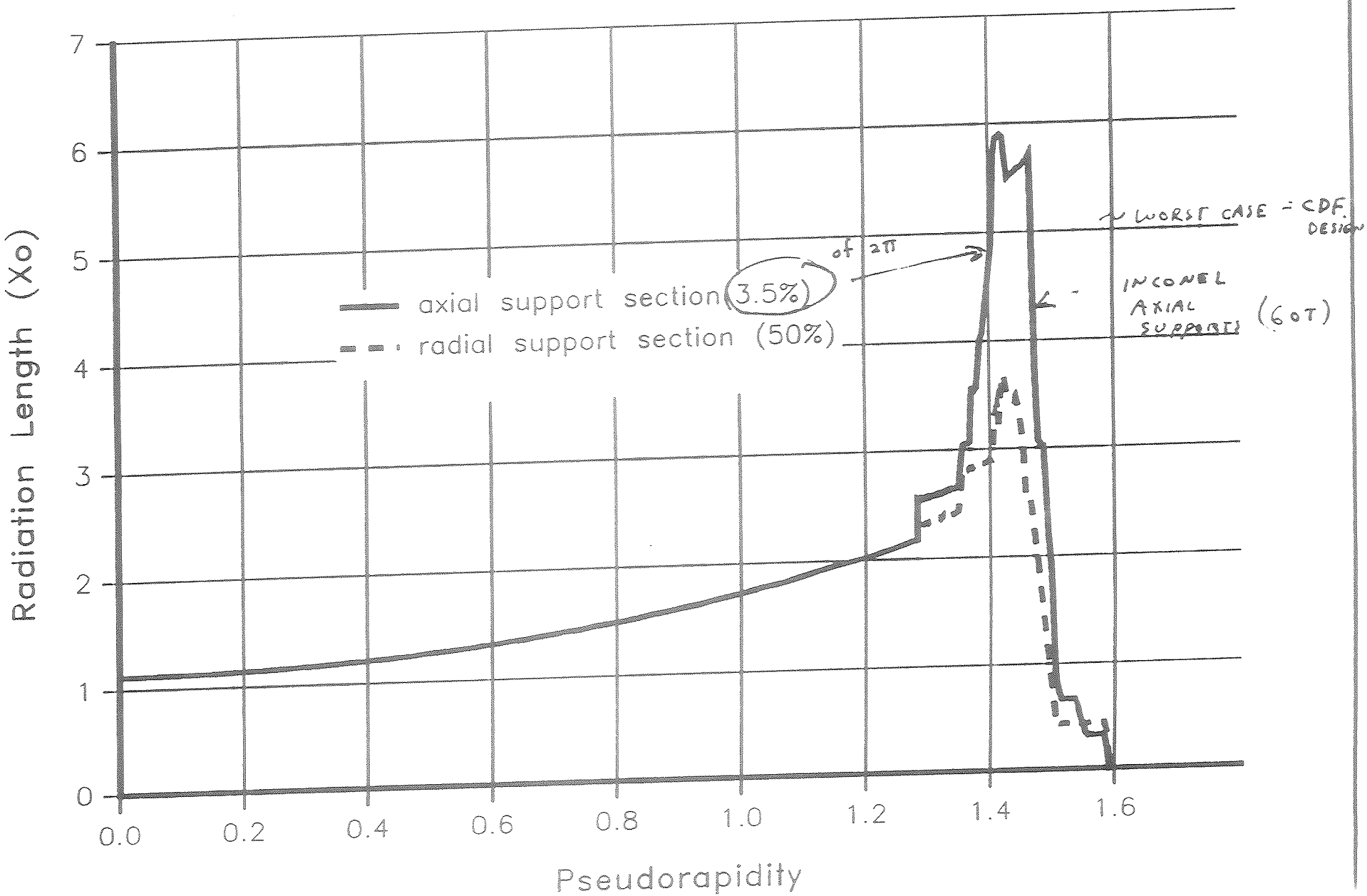

# Radiation Length V.S. Pseudorapidity

for warrentruss support system

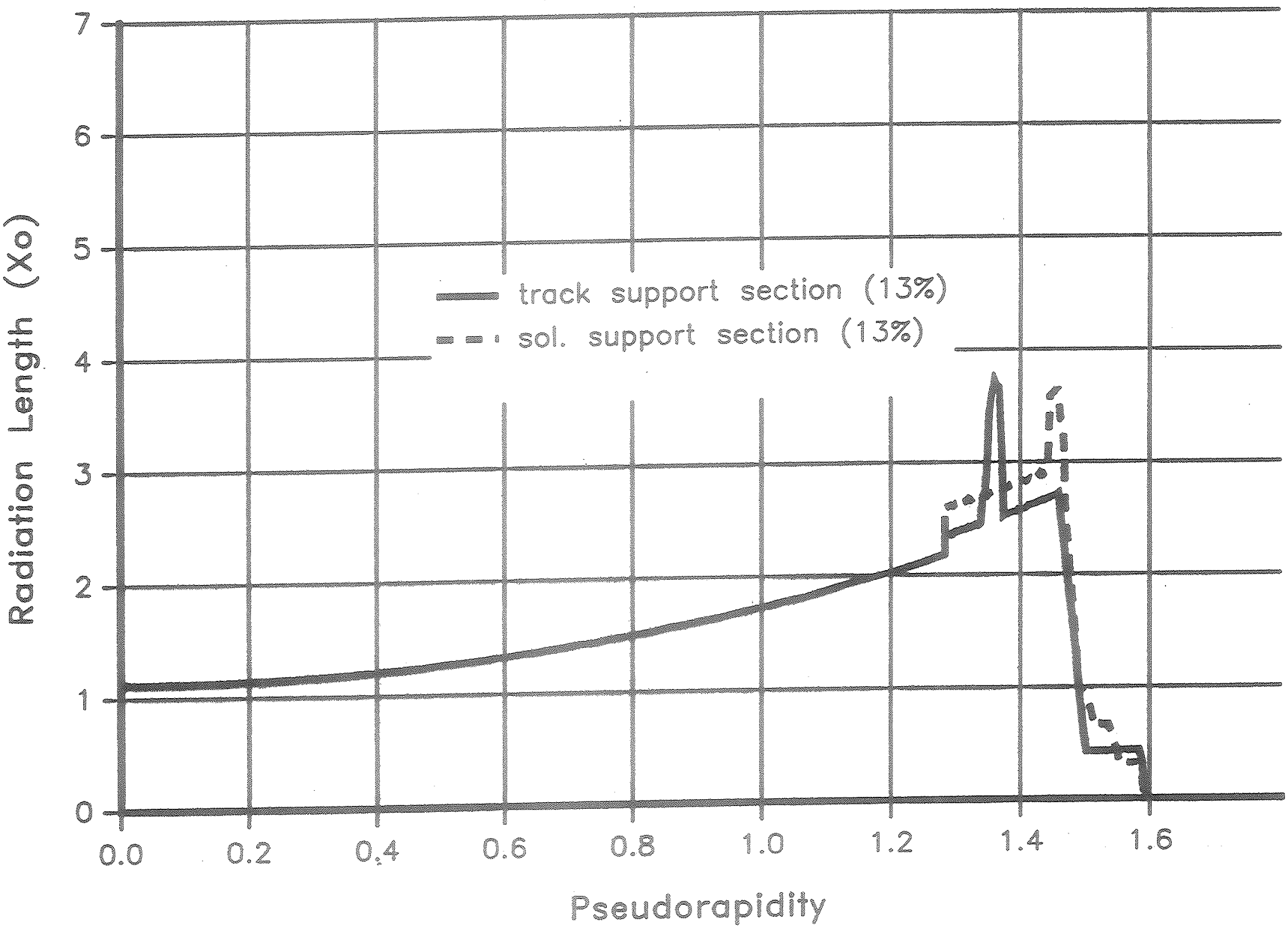


1.4.5 comparison of support (Lee)

# Conclusions

1) Fe absorber for HAC-1 in the endwall region can reduce the forces on the SC coil and lead either to more conservative designs or higher central field values. Iron in close proximity to the end of the current sheet results in very uniform fields in the tracking volume.

2) We are assembling the tools to study various iron geometries in detail. These geometries may have a smaller impact on EM hermeticity and resolution than previously thought.