Fermilab

SDC SOLENOID DESIGN NOTE #163

TITLE: Notes from Solenoid Magnet Working Group Meeting on Nov 7-8, 1991

AUTHOR: R.W. Fast

DATE: Nov 11, 1991

ABSTRACT: This design note contains the agenda for the working group meeting, the notes which I took during the meeting, and a copy of the viewgraphs shown by the Fermilab speakers.

AGENDA

We must reach decisions on those items in bold type.

1. Detector Magnet--Thursday morning and early afternoon

   1.1 General design considerations.....BK,AY

   1.2 Schedule.....AY,RS

   1.3 Coil-outer support cylinder
   - 1.3.1 Dimensions .....AY
   - 1.3.2 Progress on conductor production, tests on conductor
   - 1.3.3 Progress on winding machine/fixture
   - 1.3.4 Coil compressive force, off-balance forces--not known at this time .....AY,BW
   - 1.3.5 Coil design, stability, quench analysis .....AY,AL
   - 1.3.6 Max pressure in cooling tube during quench .....AS
   - 1.3.7 Coil cooling scheme; forced flow or thermosiphon? .....AS,AY
   - 1.3.8 He cooling tube, size, design pressure, routing .....AS,AY

   1.4 Cold-mass supports
   - 1.4.1 Design loads--not known at this time .....BW,AY
   - 1.4.2 Warren truss support system .....JK
   - 1.4.3 Pool rack support system.....JK
   - 1.4.4 Separated function system.....AY,JK
   - 1.4.5 Comparison of radiation thickness.....AL

   1.5 Vacuum vessel
   - 1.5.1 Description of all-metal honeycomb shell .....AY
   - 1.5.2 Description of isogrid shell .....CG
   - 1.5.3 Description of inner shell and bulkhead.....CG
   - 1.5.4 Shell to bulkhead attachments and vacuum sealing.....CG
   - 1.5.5 Comparison of radiation thickness; IG vs HCAL

1.5.6 **Should we fund a consultant to perform comparison of isogrid and honeycomb OVS?**.....BK,AY
1.5.7 **If so, what total thickness for comparison?**.....BK,AY
1.5.8 Removability of bulkheads.....all
1.5.9 IVS thickness; external pressure rating.....BK,AY
1.5.10 Attachment to calorimeter.....JK

1.6 Chimney and control dewar
1.6.1 Location and size of chimney nozzle.....AS,AY
1.6.2 Location and size of connector box.....AS
1.6.3 Location of field joint.....AS
1.6.4 Size and route of chimney.....AS
1.6.5 Location, size and function of control dewar.....AS
1.6.6 Location, size and function of service port.....AY
1.6.7 KEK-FNAL boundary; connections across boundary.....BK,AY

1.7 Interface to calorimeter and tracker
1.7.1 Outer radius of OVS, tolerance.....BK,AY
1.7.2 Inner radius of IVS, tolerance.....BK,AY
1.7.3 Radial stay-out zones.....BK,AY
1.7.4 Length of cryostat--not known at this time
1.7.5 Attachment of cryostat to calorimeter.....JK
1.7.6 Tracker cabling, conical section on IVS.....BK
1.7.7 Attachment of tracker to calorimeter.....JK
1.7.8 Temperature control of OVS and IVS.....RF

2. Technical Proposal--Thursday afternoon

2.1 **Table of Contents**.....AY
2.2 **Writing assignments**.....BK,AY
2.3 **Editing and mechanics**.....BK,AY
2.4 **Content**.....all
2.5 **Preliminary Hazard Analysis Report**.....RF,AS

3. Visit to Machine Shop to See Isogrid Machining, Visit CDF and D0--Friday morning

4. Design and Fabrication of Prototype Magnet--Friday afternoon

4.1 **Detailed schedule**.....AY,RS

4.2 Coil-outer support cylinder.....AY
4.2.1 **Final dimensions**
4.2.2 Magnetostatics, coil compressive force
4.2.3 Stored energy, quench analysis
4.2.4 He cooling tube, size and routing

4.3 Radiation shields and thermal intercepts.....AY

4.4 Supports
4.4.1 **Design loads**.....AY
4.4.2 **Type; separated or combined function?**.....BK,AY
4.4.3 **Who supplies?**.....BK,AY
4.4.4 **Attachment to vacuum vessel**.....BK,AY

4.5 Vacuum vessel
- 4.5.1 **Removability of bulkheads?** ..... AY
- 4.5.2 **IVS bolt or weld to bulkhead?** ..... AY,CG
- 4.5.3 **Location of chimney nozzle, on OVS or BH?** ..... BK,AY
- 4.5.4 **Attachment of supports to vacuum vessel** ..... BK,AY
- 4.5.5 **Conical section?** ..... BK,AY
- 4.5.6 **Dimensions** ..... BK,AY
- 4.5.7 Assembly and testing at Fermilab ..... CG,RF

5. Assembly and Testing of Prototype--Friday afternoon, if time permits

5.1 Assembly of magnet ..... AY
- 5.1.1 Assembly procedure
- 5.1.2 Instrumentation
- 5.1.3 Service port

5.2 Testing program ..... AY
- 5.2.1 Electrical circuit: power supply, dump resistor
- 5.2.2 Data acquisition system
- 5.2.3 Safety documentation required
- 5.2.4 Test procedure: test current, induce quenches?

Key to abbreviations:
AL=Ang Lee; AS=Andy Stefanik; AY=Akira Yamamoto; BK=Bob Kephart; BW=Bob Wands; CG=Chuck Grozis; JK=Jim Krebs; RF=Ron Fast; RS=Rich Stanek

NOTES

1.1 Bob Richardson told about the proposal to move GEM and SDC from the west campus to the east.

1.1 Ron Fast explained that a preliminary hazard analysis would be part of the SDC techical proposal--as a separate document. Rich Stanek asked whether were we aware of the failures in other large solenoids and had them in some sort of data base. We don't, but recognize that this would be useful. Akira said he would like to meet with the Europeans who operate Aleph, Delphi and H1.

1.2 Rich Stanek showed the viewgraphs from an Oct 24 scheduling meeting. He said that he needed more detail for the SDC magnet project.

1.3.3 Akira said that he was thinking of winding the detector solenoid by halves, starting from the center. This would give better compression during winding. He is now using 40 tonnes/20 mm as the axial and radial decentering forces. He "prefers" the axial force on the coil to be always compressive.

1.3.4 Akira wants no reentrant end cap, he favors a flat end wall. He does want want the coil to see tensile force. He worries about the actual iron geometry being different from that used for the force calculations. He used a mean coil radius of 1850 mm for his force calculations, Wands used 1810 mm. Akira consistently expresses his preference for high compressive coil force and low decentering forces over the converse.

1.3.8 The LHe cooling tube makes 12 passes in the KEK design. Akira has not calculated the temperature between the tubes. He calculated a 4.2 K heat load of 30 W and a 70 K load of 300 W. (Is this just for the magnet cryostat and chimney, and not the transfer line? I think so.) Akira prefers and is planning to use a 60 K GHe flow for the radiation shields, but he would not reject the use of LIN. His charging load at 1 mT/s is 80 W and requires an LHe flow of 20 g/s. For a 4-hour, 80 MJ quench recovery, 3000 L of LHe is needed. The cold-mass supports are strapped to the cooling tube with 59's aluminum.

1.3.7 The group unanimously accepted the idea that the SDC solenoid be cooled by a forced flow of LHe, rather than by a thermosiphon. The deciding factor seemed to be the additional radial space needed for the supply and return manifolds in a thermosiphon.

1.4.4 Akira's separated-function support system now has axial tension members on both ends, the supports on one end make contact only when cold. This scheme suggests that the axial decentering force might be carried through the two vacuum shells, although Bob Kephart had an attachment scheme that avoided this. The KEK supports, both radial and axial, attach to the annular bulkhead. Bob Richardson proposed that we use a safety factor of 4 on the UTS for composites, and a factor of 2 on UTS for metallics.

1.5 The all-metal honeycomb (HC) sample which Akira brought to the meeting was from Sumitomo Light Metals. The skins are a two-layer sandwich of 6951 and 4045 aluminums which have different melting points. In the brazing process one layer melts, forming a diffusion bond to the HC core. In this technique, 3 panels would be welded to form a short cylinder and six short cylinders welded to form the 8 m cylinder. The panels could either be brazed as arcs or brazed as flats and formed into arcs.

Akira's HC calculations included a knock-down factor of 0.75, the same as used by Paul Slysh for the isogrid.

1.5.6 We agreed not to fund a consultant to perform a comparison study of isogrid and HC, but to do the study ourselves.

1.5.7 We decided to use a total thickness of 46 mm for the IG/HC comparison.

1.5.8 Akira agreed that the bulkheads would be removable on the prototype only. Kephart suggested that we think about incorporating access ports in the bulkhead.

1.6.1 Andy presented pressure drop calculations for 8 and 10" (200 and 250 mm) nozzles. 10" is OK even if instrumentation wires run through it; 8" is OK only if it contains no wires.

The vacuum pumping speed for an 8" nozzle is 70% that for the 12" and the speed for a 10" nozzle is 90%. Any of these three rates is OK with respect to the CDF leak rate.

1.6.2 Andy gave a comparison of the different location of the connector box. The box could be located on the chimney inside the hadron calorimeter or in the space outside the calorimeter. The connectors could also be located directly on the top of the outer vacuum shell or on the bulkhead.

All agreed that it would be better if the instrumentation wires were soldered to the connectors at the factory rather than during the installation at the SSCL.

We agreed not to use connectors inside the chimney (in the vacuum space).

1.6.3 The field joint could be inside the calorimeter wedge or in the space between the calorimeter and the muon iron. We did not choose the location at this time.

1.6.4 The chimney runs vertically through the detector. Andy showed calculations of the pressure rise through the chimney. For 120 g/s of 300-K He gas the pressure rise in an 8"/200mm chimney is 1.7 psi/0.12 kg/cm2, which is more than the 0.675 psi/0.05 kg/cm2 allowed for the inner vacuum shell. The pressure rise in a 10"/250mm chimney is 0.43 psi, which is less than the allowable. This means that for this failure flow rate a 10" chimney is acceptable, but an 8" one is not.

The pumping speed for an 8"/200mm chimney is 10% that of a 12.75"/325mm chimney; but this speed might be acceptable for a leak the size of the one at CDF.

Andy suggested that we hold the 12.75"/325mm chimney channel through the detector until we know more details on the chimney and can refine the pressure rise and pumping speed calculations.

1.6.5 We did not discuss the control dewar very much, but Andy had these thoughts. The control dewar would be the responsibility of FNAL/SSCL. To reduce the number of U-tubes, the control dewar could replace the bayonet can at the end of the transfer line. If so, there should be a vacuum break between between the CD and the TL. The CD would contain the He subcooler, LHe flow control valve for the solenoid, and cooldown by-pass valves. It has female bayonets for the U-tubes connecting it to the service port. Helium relief valves might be located on it. It would have access panels and reasonable interior space. It might also have bayonets for U-tubes leading to the VLPCs.

1.6.6 The service port, provided as part of the magnet package, contains the vapor-cooled current leads and a small He phase separator pot for them. It has female bayonets for the U-tubes, a flange for a vacuum gate valve and vacuum turbo pump, the vacuum relief device, electrical feed-through connectors, etc. The ceramic, high-current feed-throughs would have a secondary vacuum container, similar in function to the "Watt" can at CDF.

1.6.7 The boundary between the magnet furnished by KEK and the SSCL facilities will be the U-tubes connecting the service port (KEK) and the control dewar (SSCL).

2.2 Tech Prop writing assignments: Wands--magnetostatics, Lee--thickness vs pseudorapidity, Andy--cooling tube, magnet flow sheet, Stanek--schedule, Richardson--refrigerator, transfer line, power supply, bus, control system, Fast/Grozis--IG OVS

2.3 Akira must get a 1st draft to Gil by Dec 12. Ron will gather FNAL material and send text to Akira by E-mail and figures by fax on Nov 20. Akira will edit and send back an E-mail draft by Nov 29. FNAL will turn that around by Dec 4th or 5th.

2.5 Ron and Andy have a meeting with SSCL guys on Nov 20 to discuss the PHAR. They will probably need input from Akira.

4.1 Prototype (PT) schedule--see last viewgraph

Vac vessel procurement and test: Nov 91 to Dec 31, 1992
Assembly at KEK: some small items assembled Jan-Mar '93,
big assembly job starts Apr 1, 1993
Test at KEK: Oct '93 - Jan '94

Construction of detector magnet: starts April, 1994

4.4.1 The PT should have a support system adequate for the forces which will be encountered in the detector magnet. The aim is to use the support system in the PT for the detector magnet.

4.4.2 It was decided to use a separated-function support system for the PT. KEK and FNAL will both design a SF support system, a decision will be made later regarding which one to use for PT. We agreed (?) not to freeze the mean coil radius at 1850 mm at this time, but to try to fit the supports to this dimension. The two support systems would be designed to the forces constants resulting from the calorimeter decision (assuming this decision comes soon), with a displacement of 20 or 25 mm.

Axial supports--the number of axial supports should be 32/n, n = 1,2,4,8. Will be designed to tension only and for tension and compression. Kephart wants axials designed for 80 tonnes, Yamamoto prefers no more than 40 tonnes.

Radial--The warm end to be attached to the bulkhead, not the OVS. It is preferable to attach the cold end to the outer support cylinder rather than to the end ring. Akira agreed to think about this.

4.5.1 Akira asked for and FNAL agreed to provide removable bulkheads for the PT. Both bulkheads would be attached with bolts to the OVS and IVS, with the vacuum seal made with O-rings.

4.5.2 The bulkhead will be bolted to the IVS.

4.5.3 Akira will investigate whether a chimney nozzle hole (12.75", 324 mm diameter) or a hexagonal slot is needed for the PT. The chimney nozzle will have a flange and O-ring seal.

4.5.4 Supports will attach only to the bulkhead.

4.5.5 We all agreed to eliminate the conical section on the prototype vacuum vessel.

4.5.6 We agreed on the final dimensions for the PT vacuum vessel:

OR of isogrid shell: 2060 mm
IR of isogrid shell: 2004 mm
IR of inner shell: 1700 mm
OR of inner shell: 1706 mm
Outside length: 2378 mm
Inside length: 2340 mm

4.5.7 The PT vacuum vessel will be evacuated and leak checked at FNAL before shipment to Japan.

5. There was no time to discuss these items.

1.1 – Design Considerations (Fast)

SDC SAFETY ANALYSIS GROUP

POINT OF CONTACT FOR SUBSYSTEM ON MATTERS OF SAFETY

HAZARD IDENTIFICATION
HAZARD EFFECTS
HAZARD MITIGATION
} ANALYSES

PEER REVIEW OF OTHER SUBSYSTEM ANALYSES

PRELIMINARY HAZARD ANALYSIS REPORT
(qualitative)
due 4/1/92

PRELIMINARY SAFETY ANALYSIS REPORT
(quantitative)
due at start of construction

basis: failure modes and effects analysis

SDC SAFETY ANALYSIS GROUP

SILICON TRACKING	BOB REID
OUTER TRACKING	ROD LEITCH (ORNL)
SUPERCONDUCTING COIL	RON FAST
CENTRAL CALORIMETRY	JAY HOFFMAN
FORWARD CALORIMETRY	
MUON STRUCTURES	JEFF WESTERN
MUON DETECTORS	JON THUNBORG
ELECTRONICS	
RADIATION SAFETY	

SSCL:

JOHN ELIAS
BOB LAVELLE
JIM LAWLER
GEORGES LESKENS

Preliminary Hazard Analysis

- Severity of Consequences of an Accident
- Probability of the Occurrence of an Accident
- Definition of Risk Zones
- Requirements for Mitigation Approaches

SSC Laboratory

Physics Research Division

Severity of Consequences

	CATEGORY	INJURY	EQUIP LOSS	DOWN TIME	ENVIRONMENTAL IMPACT
1	Catastrophic	Death	> 500K	> 4 Months	> 5 Years or > 500K
2	Critical	Sever Injury or Occupational Illness	100K- 500K	.5 - 4 Months	1 - 5 Years or 100K - 500K
3	Marginal	Minor Injury or Occupational Illness	1K - 100K	1 Day - 2 Weeks	< 1 Year or 1K - 100K
4	Negligible	No Injury or Illness	< 1K	< 1 Day	Minor Damage or < 1K

Probability of Mishap

A	Frequent	Likely to occur repeatedly during the life of the system
B	Probable	Likely to occur several time during the life of the system
C	Occasional	Likely to occur sometime in the life of the system
D	Remote	Not likely to occur in the life of the system
E	Improbable	Probability of occurrence is not statistically different from zero
F	Impossible	Occurrence is physically impossible

Risk Zones

1 — Mandatory to mediate risk to a lower level

2 — Operation requires written, time limited waiver by management

3 — Operation permissible

SSC Laboratory

Physics Research Division

Risk Matrix

	A Frequent	B Probable	C Occasional	D Remote	E Improbable	F Impossible
1 Catastrophic						
2 Critical						
3 Marginal						
4 Negligible						

SSC Laboratory

Physics Research Division

Preliminary Hazard Analysis Form

Preliminary Hazard Analysis Form - SSCL Physics Research Division		
Subsystem and Location	Date _____ Rev _____	Attachments YES NO
Operational Phase		
Hazard Description		
Risk Assessment Prior to any Abatement Strategy		
Current Recommended Action		
Risk Assessment After Implementation of Recommended Action		
Remarks		

construction
operation
maintenance

Environmental Safety and Health

Lavelle

SDC Cost/Schedule Kickoff Meeting

SDC

Technical Proposal Kickoff

Cost/Schedule

10/24/91

1.2 - Schedule (Stanek)

SDC Cost/Schedule Kickoff Meeting

Cost/Schedule Overview

Previous Configuration of SDC Detector - see drawing

Previous Cost Estimate including contingency (Aug. 21, 1991 Roll-up) for Detector :

System	Cost (FY 90 M$)
Tracking Systems	147
Calorimeters	197
Muon Systems	150
S.C. Magnet	37
Electronics Systems	154
Computing	10
Conventional Systems	14
Installation & Test	37
Project Management	21
Total	767 incl ~ 27% contingency

Detector Configuration Costed in Aug. 21, 1991 Roll-up

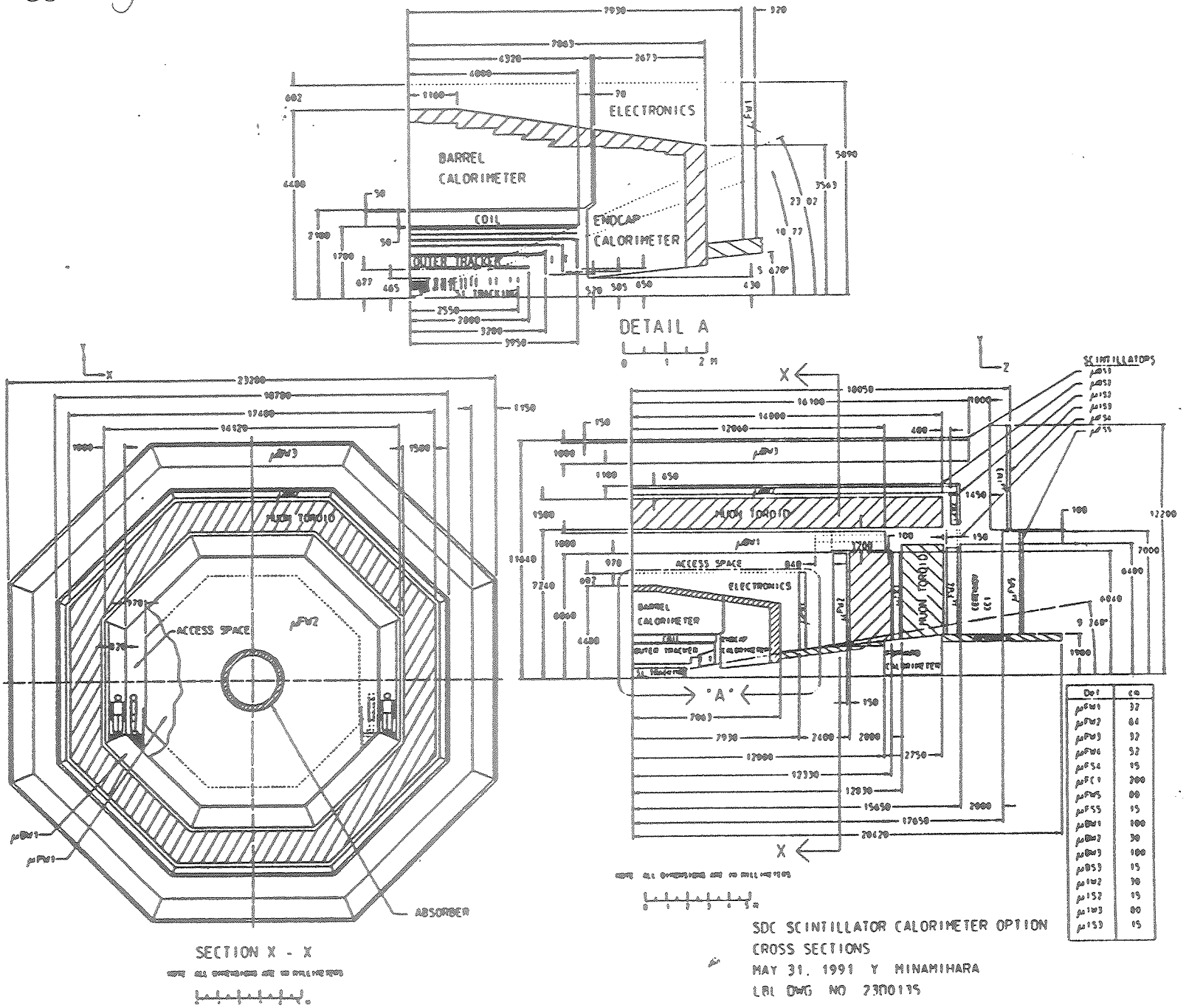

SDC Cost/Schedule Kickoff Meeting

Cost/Schedule Overview

Current Configuration of SDC Detector - see drawing

Costs presented to PAC Oct. 3, 1991 Need to reduce!

System	Cost (FY 91 M$)
Tracking Systems	95
Calorimeters	160
Muon Systems	120
S.C. Magnet	35
Electronics Systems	100
Computing	10
Conventional Systems	10
Installation & Test	30
Project Management	20
Total	580

SDC Cost/Schedule Kickoff Meeting

Cost/Schedule Overview

Presentation to PAC by Gil (Oct 3-4, 1991) :

- Use existing database to aid in technology selections and scope definition
  - Scope decisions to be supported:
    - a) Central calorimeter absorber configuration - Nov. 17, 1991 IRON vs. Pb.
    - b) Tracking system cost review - Nov. 12, 1991
    - c) Barrel muon chamber design selected - Feb. 1, 1992
- Improve mechanics of estimating/scheduling
  - "Formal" Procedures for Technical Proposal Costing/Scheduling
  - Estimate documentation and review process

Current Detector Configuration

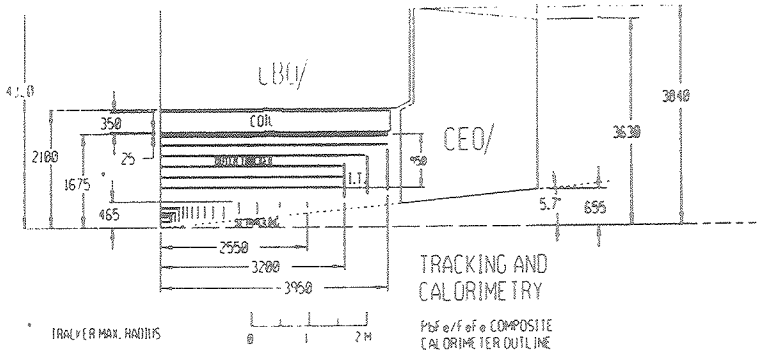

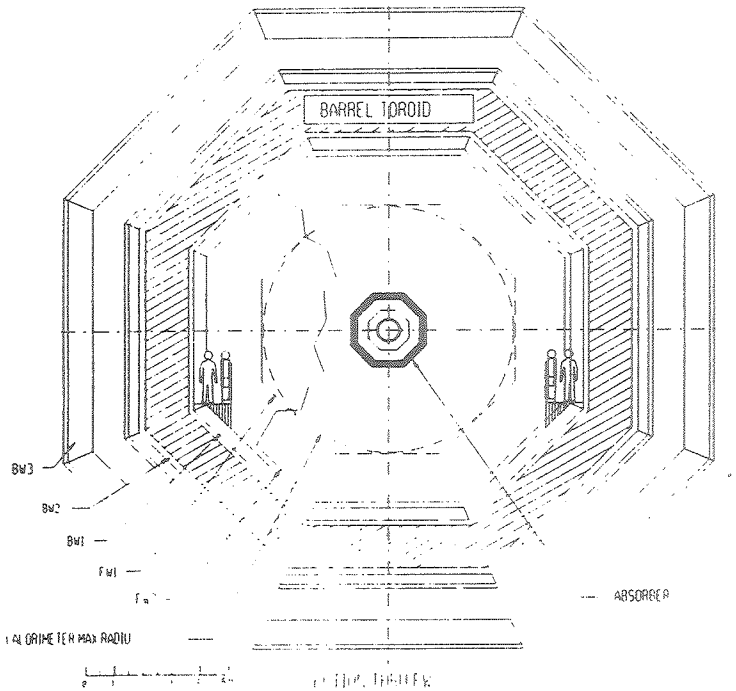

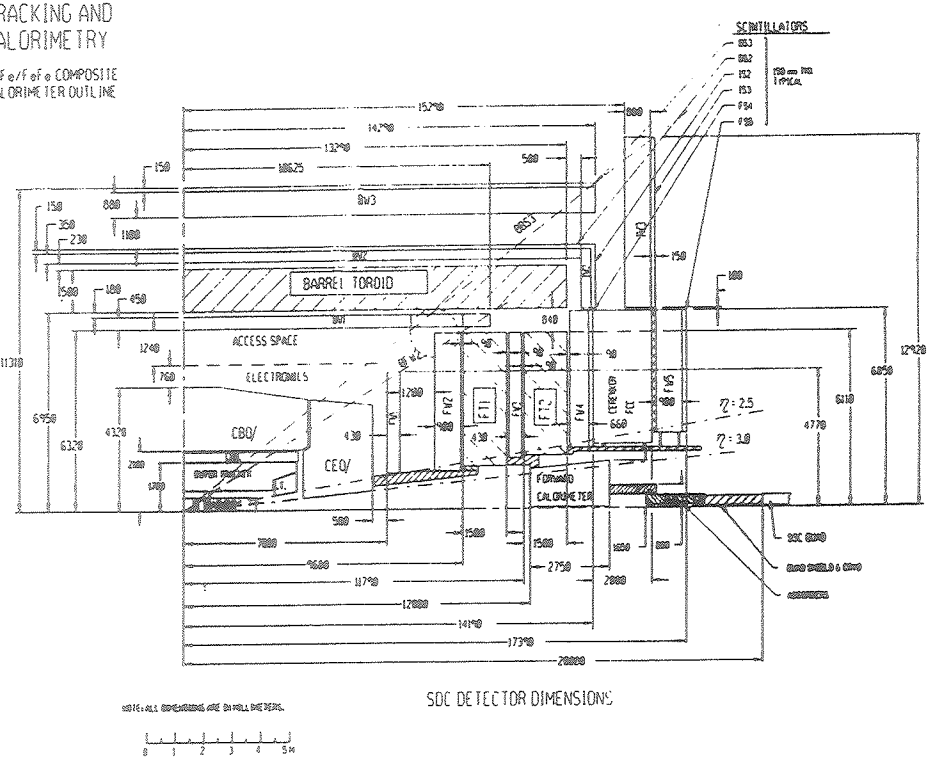

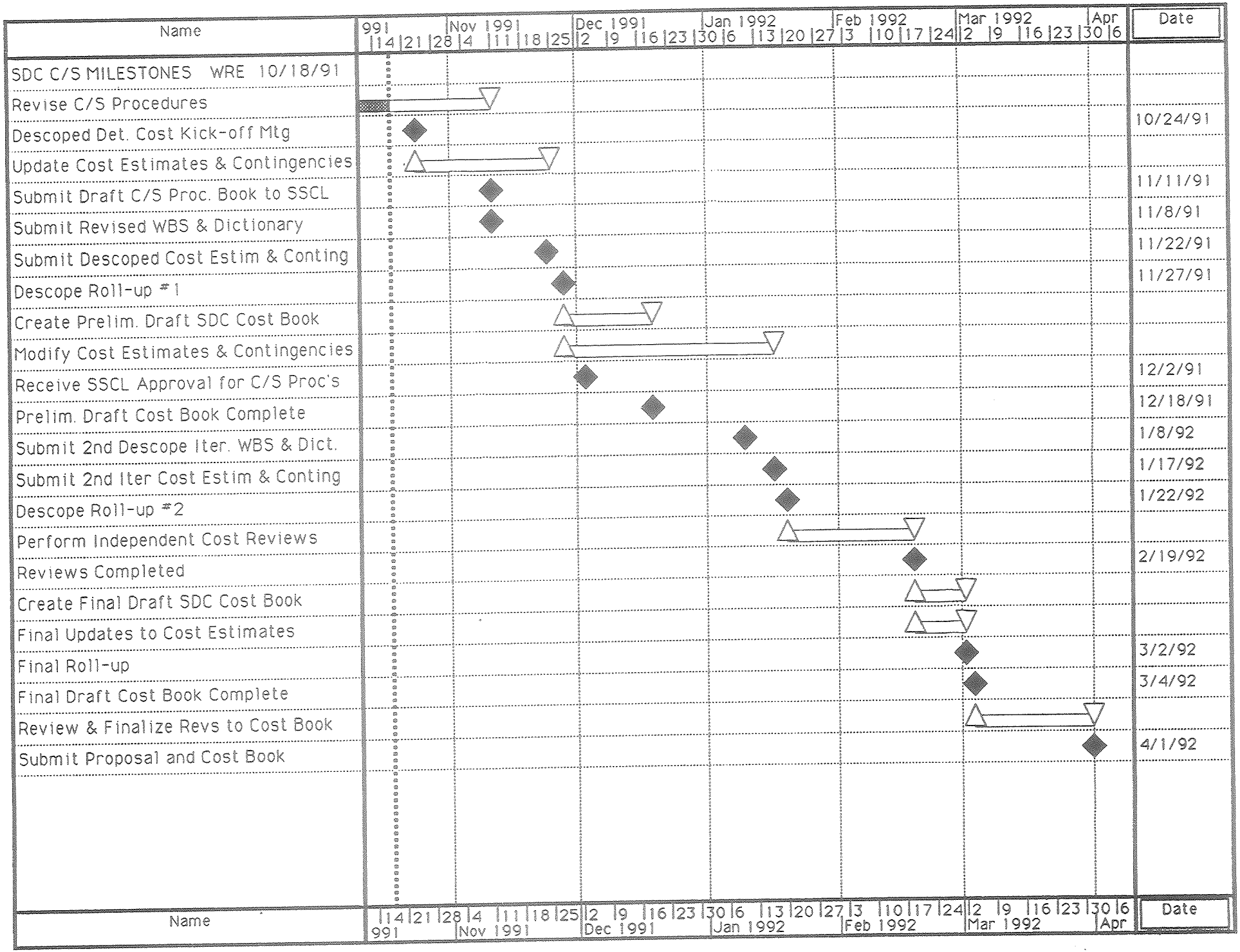
Name
991
Nov 1991
Dec 1991
Jan 1992
Feb 1992
Mar 1992
Apr
14 21 28 4 11 18 25 2 9 16 23 30 6 13 20 27 3 10 17 24 2 9 16 23 30 6
Date
SDC C/S MILESTONES WRE 10/18/91
Revise C/S Procedures
Descoped Det. Cost Kick-off Mtg
10/24/91
Update Cost Estimates & Contingencies
Submit Draft C/S Proc. Book to SSCL
11/11/91
Submit Revised WBS & Dictionary
11/8/91
Submit Descoped Cost Estim & Conting
11/22/91
Descope Roll-up #1
11/27/91
Create Prelim. Draft SDC Cost Book
Modify Cost Estimates & Contingencies
Receive SSCL Approval for C/S Proc's
12/2/91
Prelim. Draft Cost Book Complete
12/18/91
Submit 2nd Descope Iter. WBS & Dict.
1/8/92
Submit 2nd Iter Cost Estim & Conting
1/17/92
Descope Roll-up #2
1/22/92
Perform Independent Cost Reviews
Reviews Completed
2/19/92
Create Final Draft SDC Cost Book
Final Updates to Cost Estimates
Final Roll-up
3/2/92
Final Draft Cost Book Complete
3/4/92
Review & Finalize Revs to Cost Book
Submit Proposal and Cost Book
4/1/92
Name
14 21 28 4 11 18 25 2 9 16 23 30 6 13 20 27 3 10 17 24 2 9 16 23 30 6
991
Nov 1991
Dec 1991
Jan 1992
Feb 1992
Mar 1992
Apr
Date

SDC Cost/Schedule Kickoff Meeting

Cost/Schedule Overview

Presentation to PAC by Gil (Oct 3-4, 1991) - continued :

- Plan for cost/schedule estimate to be included with Technical Proposal
  - see work schedule charts

Further Cost/Schedule Priorities :

- Provide detector cost roll-up for major system de-scoping for systems that are "stable", e.g. silicon tracker, solenoid, muon systems, electronics, calorimeter (at least going to 9 lambda) - Nov. 13-14
- Give a lot of attention to filling in holes or weak areas, e.g. test beam program, safety systems, etc.
- Prepare for compilation/creation of Cost/Schedule Book - draft to be ready by Dec. 18, 1991
- Subsystem schedule development and project schedule integration with installation plan

SDC Cost/Schedule Kickoff Meeting

Cost/Schedule Organization

Cost/Schedule Meetings :

- Nov. 13-14 at SSCL - meet to compile and roll up de-scope cost estimate for collaboration meeting, also check progress on cost/schedule refinement towards meeting Nov. 22 estimate submittal date
- Dec. 9-10 at _____ - meet to check status of cost/schedule book development towards meeting Dec. 18 Preliminary Draft Book completion
- Jan. 17-18 at _____ - meet to submit 2nd iteration of Technical Proposal Cost/Schedule
- Jan.-Feb. at _____ - Cost Reviews
- Mar. at _____ - Prepare final iteration of cost/schedule and complete book
- Periodic (1) day meetings to work specific areas in subsystem estimating, scheduling, or schedule integration - small groups

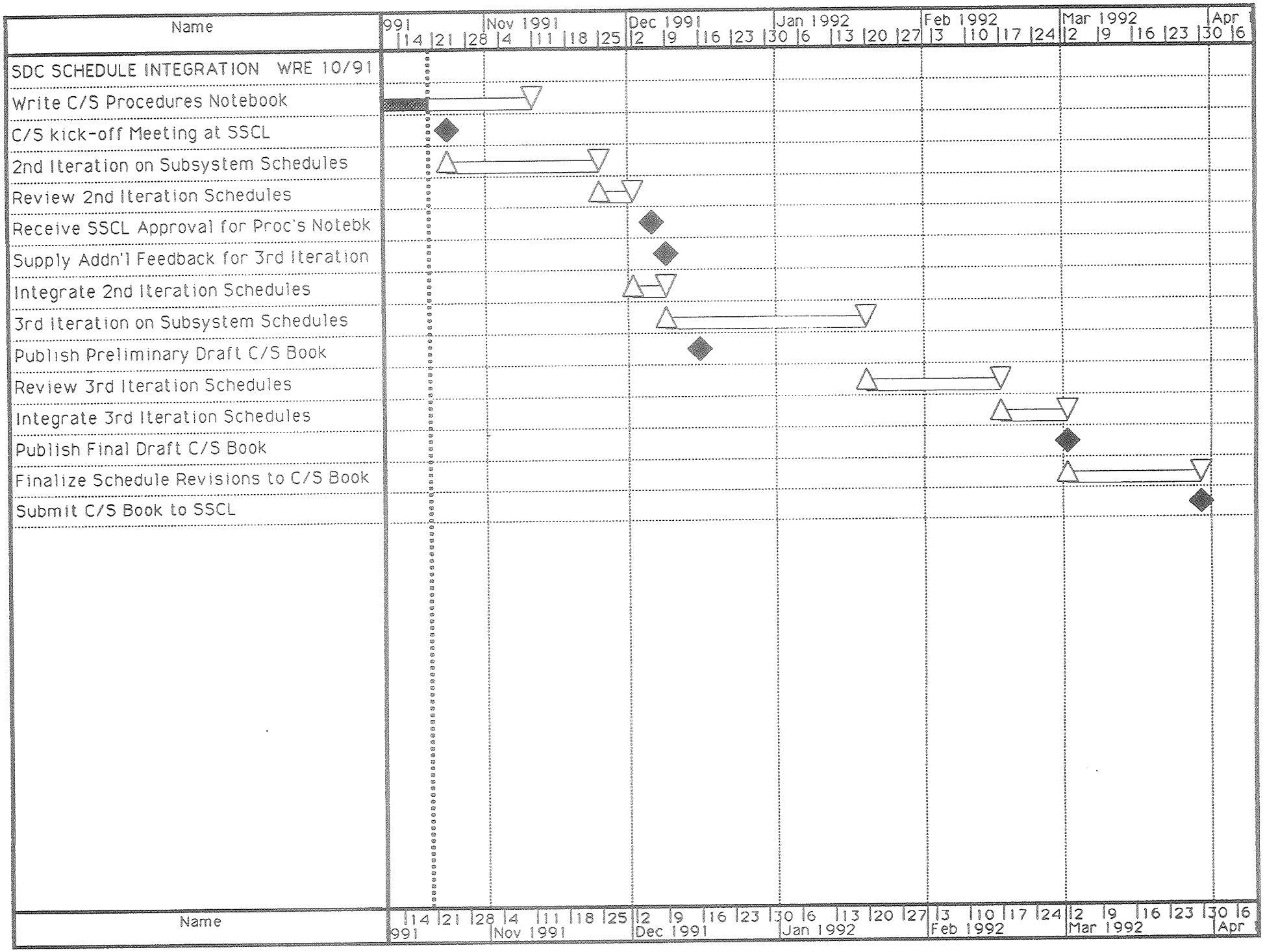
Name
991
Nov 1991
Dec 1991
Jan 1992
Feb 1992
Mar 1992
Apr
14 21 28 4 11 18 25 2 9 16 23 30 6 13 20 27 3 10 17 24 2 9 16 23 30 6
SDC SCHEDULE INTEGRATION WRE 10/91
Write C/S Procedures Notebook
C/S kick-off Meeting at SSCL
2nd Iteration on Subsystem Schedules
Review 2nd Iteration Schedules
Receive SSCL Approval for Proc's Notebk
Supply Addn'l Feedback for 3rd Iteration
Integrate 2nd Iteration Schedules
3rd Iteration on Subsystem Schedules
Publish Preliminary Draft C/S Book
Review 3rd Iteration Schedules
Integrate 3rd Iteration Schedules
Publish Final Draft C/S Book
Finalize Schedule Revisions to C/S Book
Submit C/S Book to SSCL
Name

SDC Cost/Schedule Kickoff Meeting

Cost/Schedule Methods

Same general methods as before with following policies :

- Resource loaded schedules are still the goal, need to develop schedules and load costs if done independently

- Schedule development and integration is required, every subsystem will be scheduled with the appropriate tie points (milestones)

- Estimate rationale, basis of estimates, estimate justifications, etc. are required for cost/schedule book, may be more than WBS dictionary

- WBS numbers to be used rather than WBS code, i.e. instead of 10101 for SDC Silicon Detector it will be 1.1 - SDC is the collection of 1. - 9.

- All costs need to be included from Oct. ~~93~~ 92 on, meaning include prototypes etc., may help contingency "penalties"

SDC Cost/Schedule Kickoff Meeting

Cost/Schedule Methods

Same general methods as before with following policies :

- Costing will be to year fiscal 1992, escalation will address material and subcontracts only - labor rates will be corrected and provided

- Current detector configuration will be used, options will be addressed along the way

- Cost/schedule input will be to lowest level possible, no combination of roll-up and plugged numbers

SDC SOLENOID & CRYOGENICS OVERALL PLAN (PROTOTYPE COMPLETED PRIOR TO MAIN COIL WINDING)

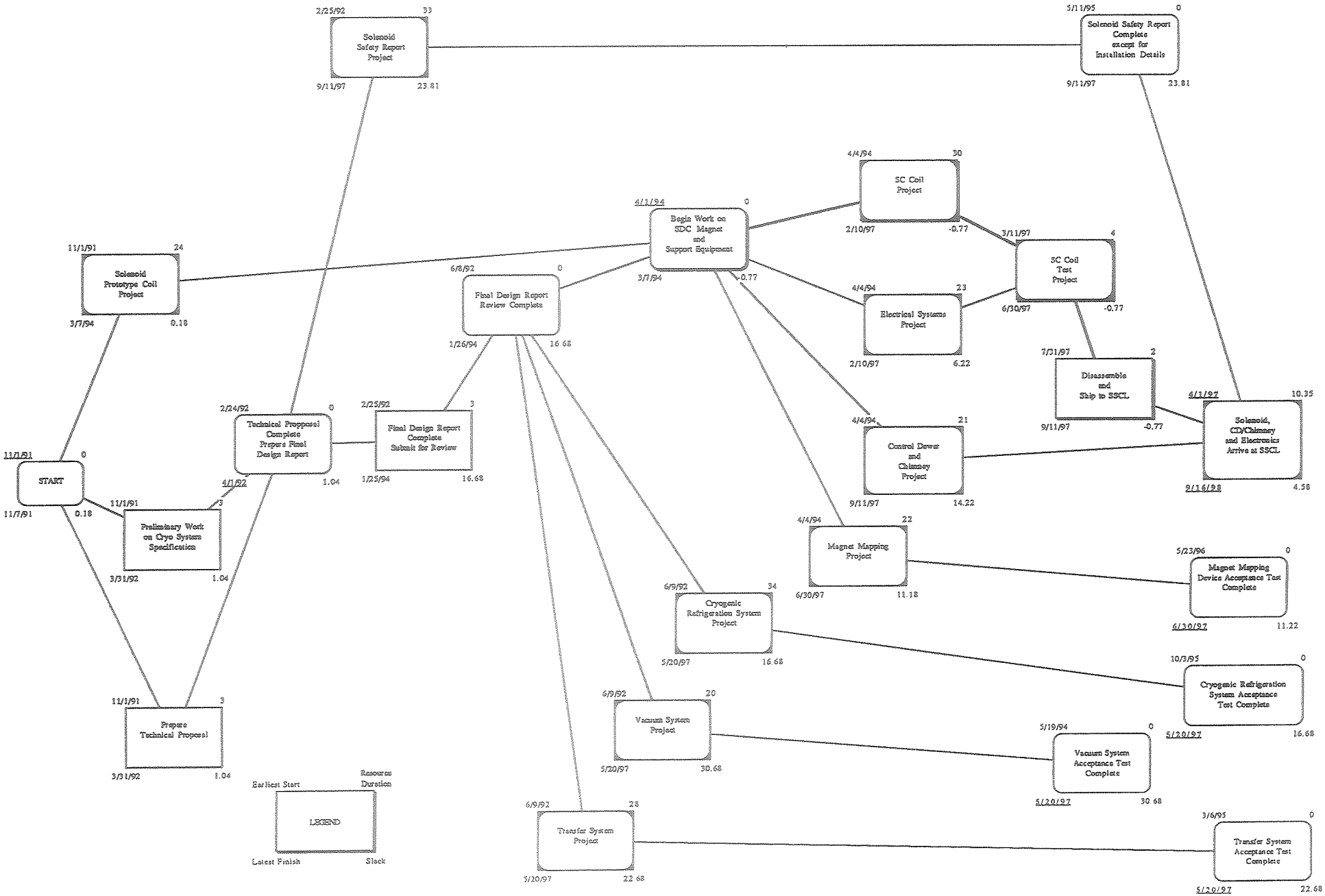

SDC SOLENOID & CRYOGENICS OVERALL PLAN (DESIGN REPORT WAITS FOR PROTOTYPE COMPLETION)

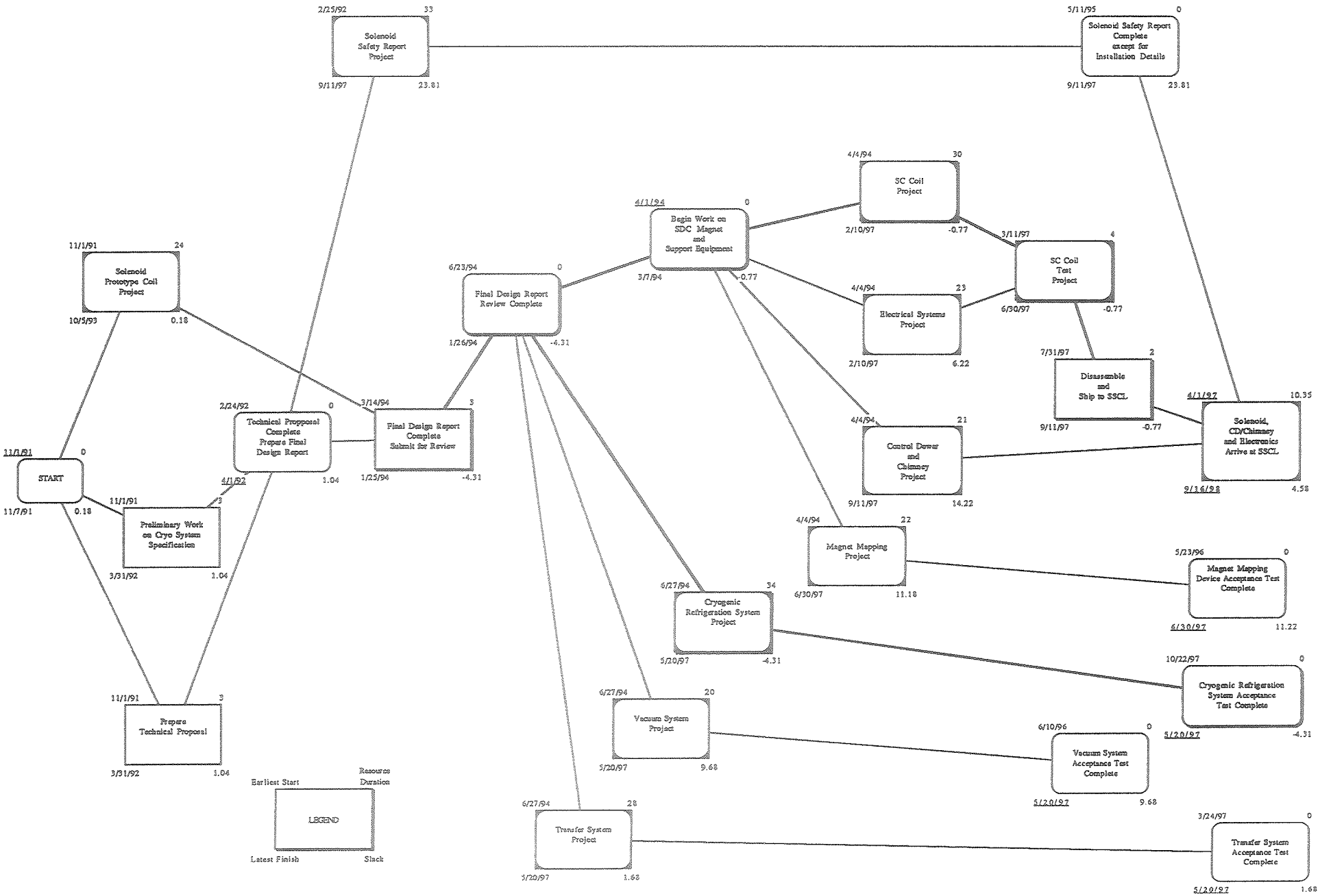

21

SDC Cryogenic Refrigeration System Project

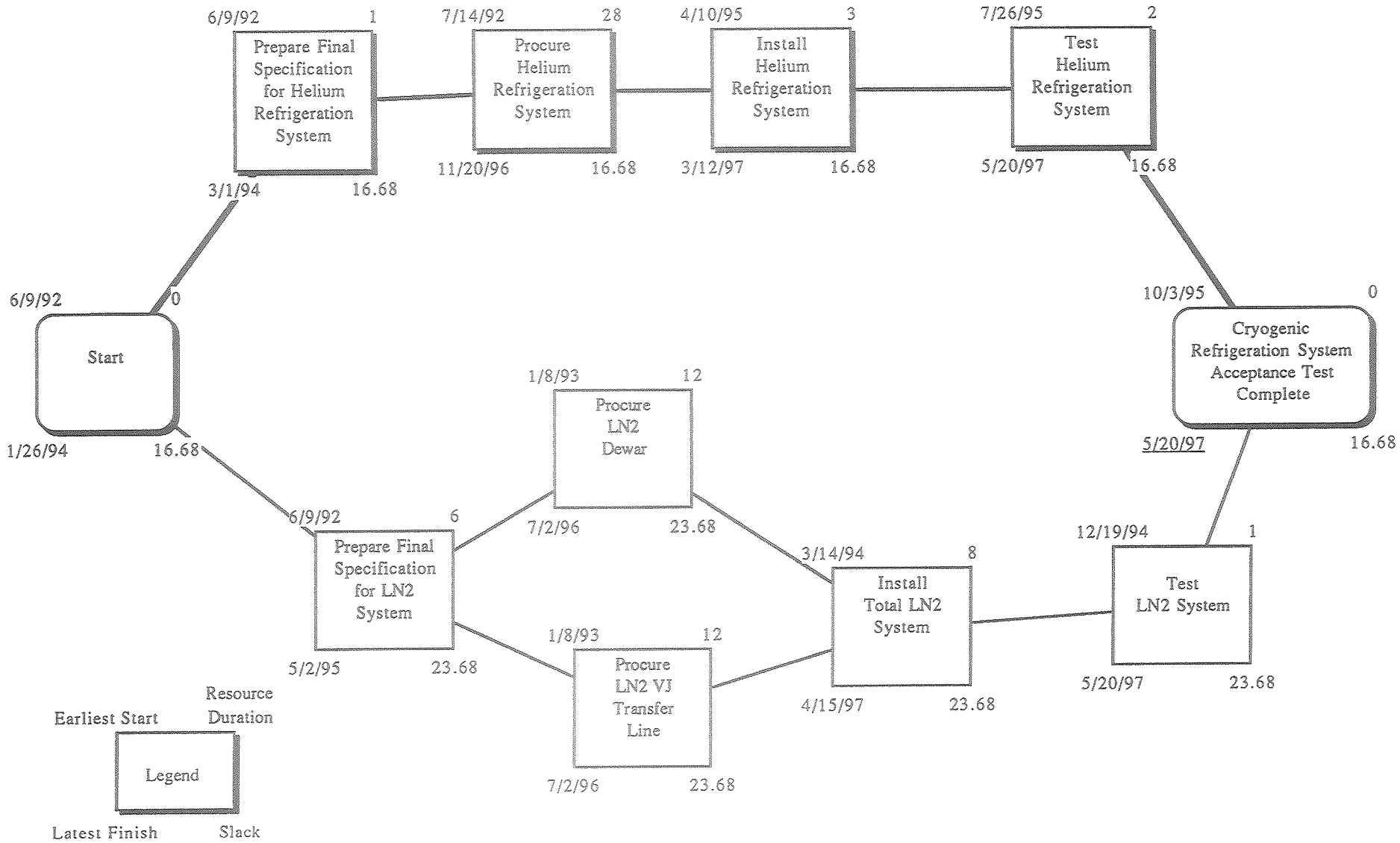

SDC Prototype Magnet Project

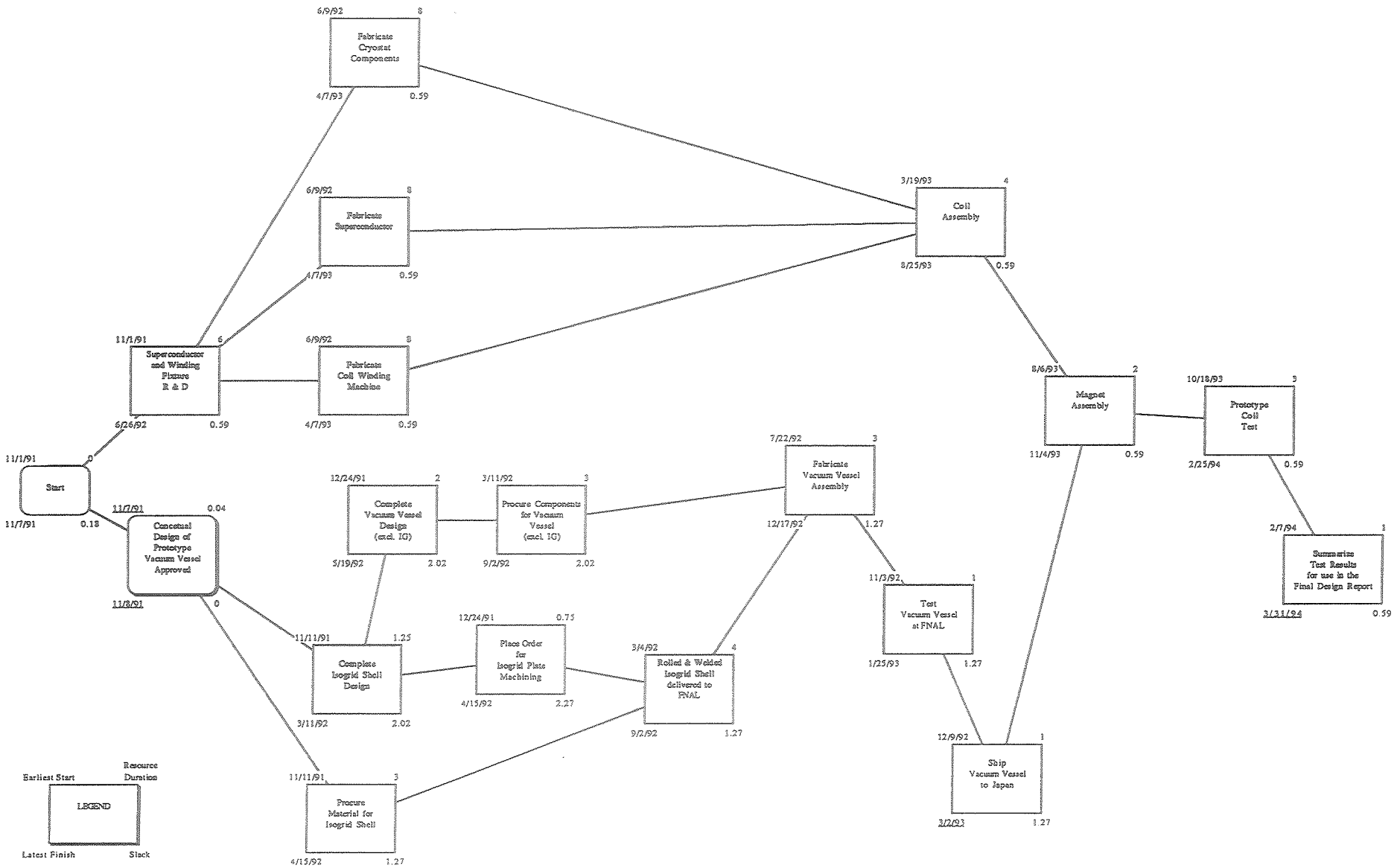

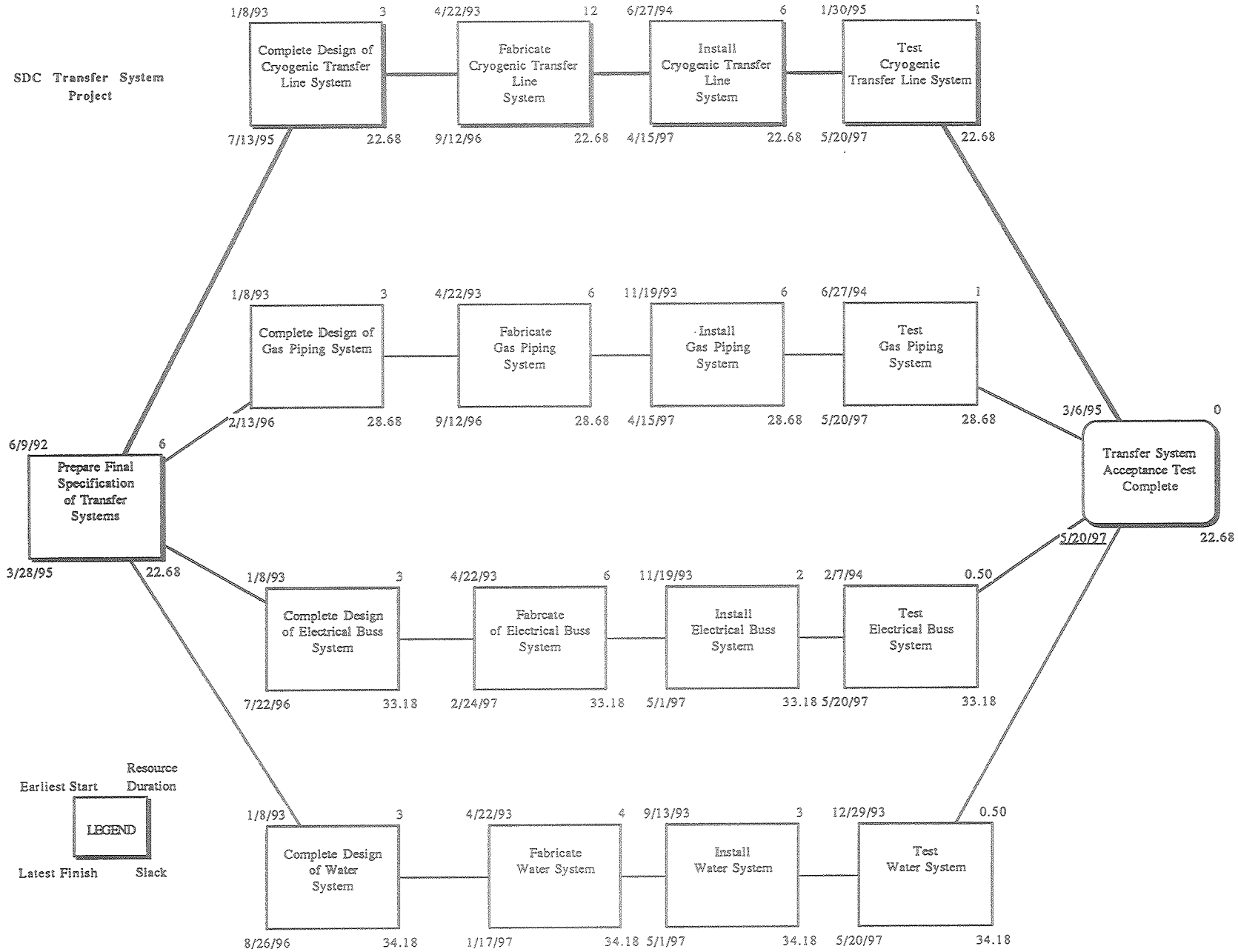
SDC Transfer System Project
Prepare Final Specification of Transfer Systems
6/9/92
6
3/28/95
22.68
Complete Design of Cryogenic Transfer Line System
1/8/93
3
7/13/95
22.68
Fabricate Cryogenic Transfer Line System
4/22/93
12
9/12/96
22.68
Install Cryogenic Transfer Line System
6/27/94
6
4/15/97
22.68
Test Cryogenic Transfer Line System
1/30/95
1
5/20/97
22.68
Complete Design of Gas Piping System
1/8/93
3
2/13/96
28.68
Fabricate Gas Piping System
4/22/93
6
9/12/96
28.68
Install Gas Piping System
11/19/93
6
4/15/97
28.68
Test Gas Piping System
6/27/94
1
5/20/97
28.68
Complete Design of Electrical Buss System
1/8/93
3
7/22/96
33.18
Fabrcate of Electrical Buss System
4/22/93
6
2/24/97
33.18
Install Electrical Buss System
11/19/93
2
5/1/97
33.18
Test Electrical Buss System
2/7/94
0.50
5/20/97
33.18
Complete Design of Water System
1/8/93
3
8/26/96
34.18
Fabricate Water System
4/22/93
4
1/17/97
34.18
Install Water System
9/13/93
3
5/1/97
34.18
Test Water System
12/29/93
0.50
5/20/97
34.18
Transfer System Acceptance Test Complete
3/6/95
0
5/20/97
22.68
Earliest Start
Resource Duration
LEGEND
Latest Finish
Slack

SDC Vacuum System Project

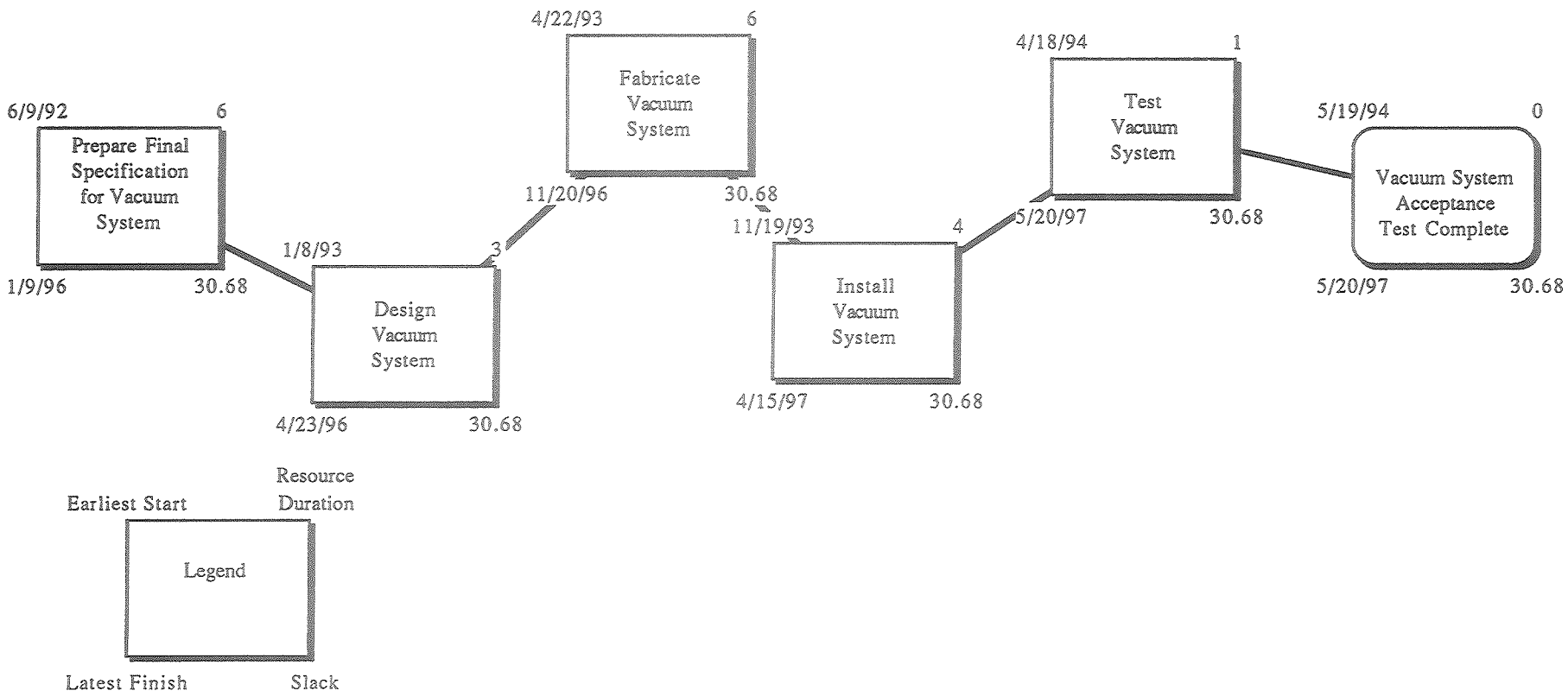

SDC Coil Test Project

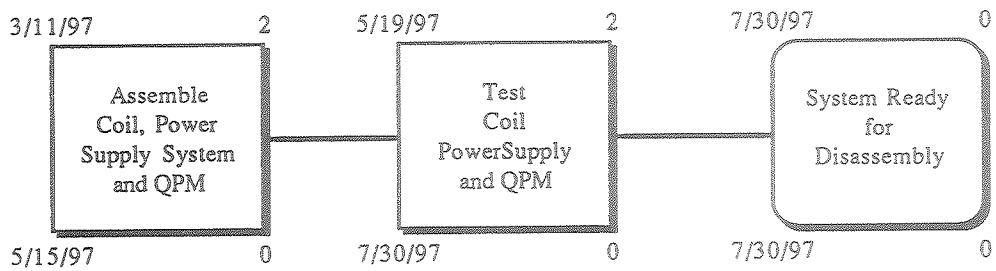

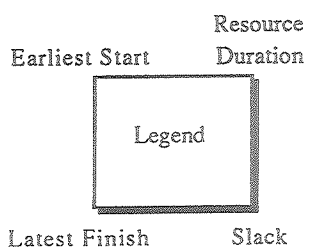

SDC Superconducting Coil Project

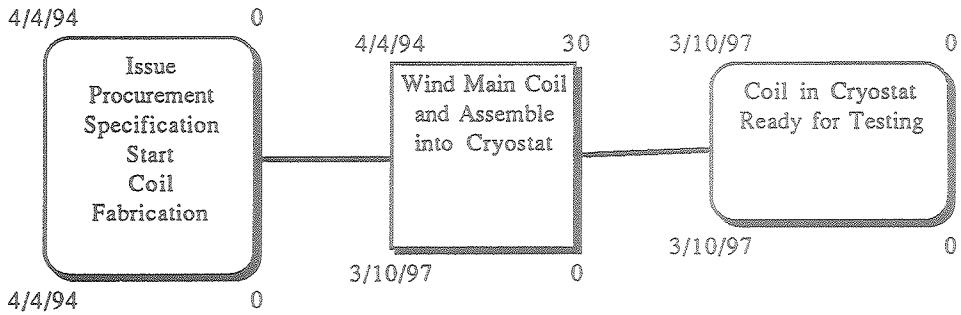

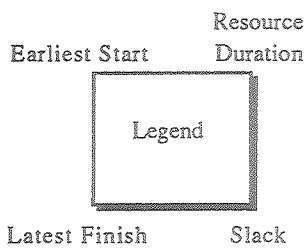

SDC Control Dewar/Chimney Project

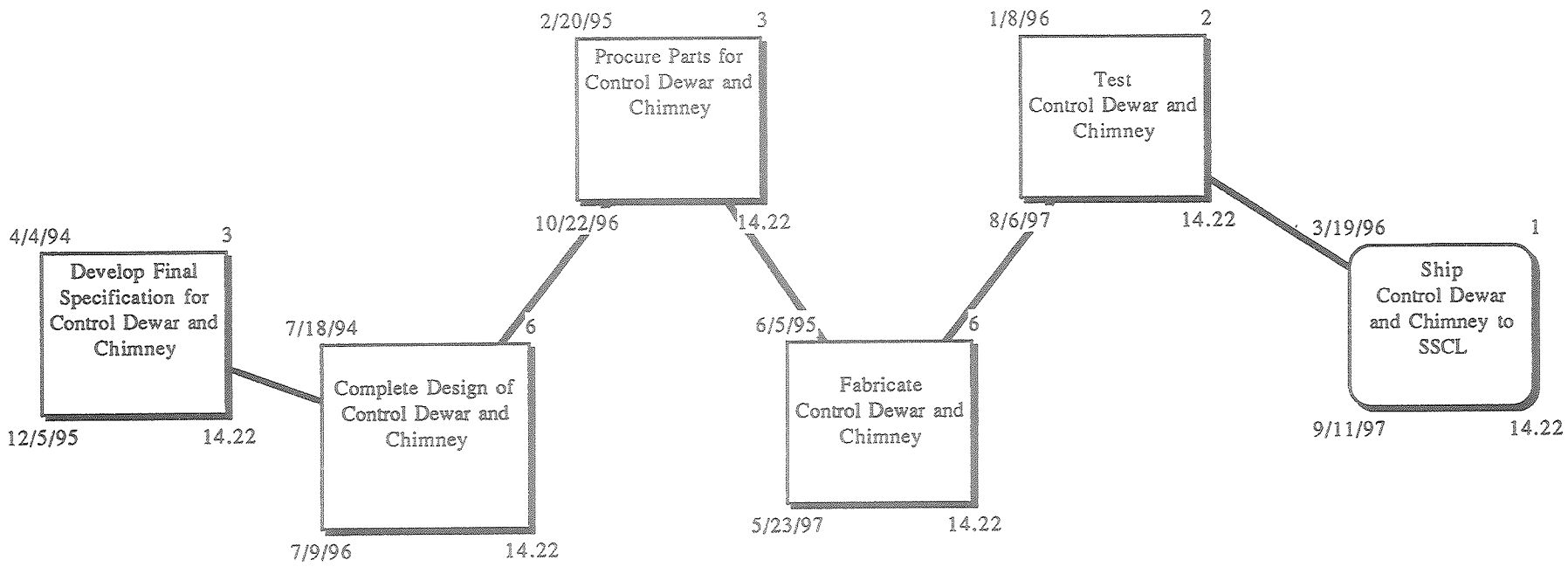

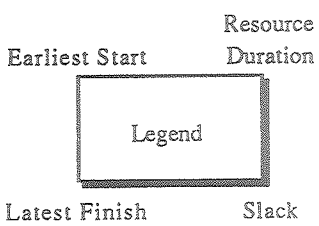

SDC Electrical Systems Project

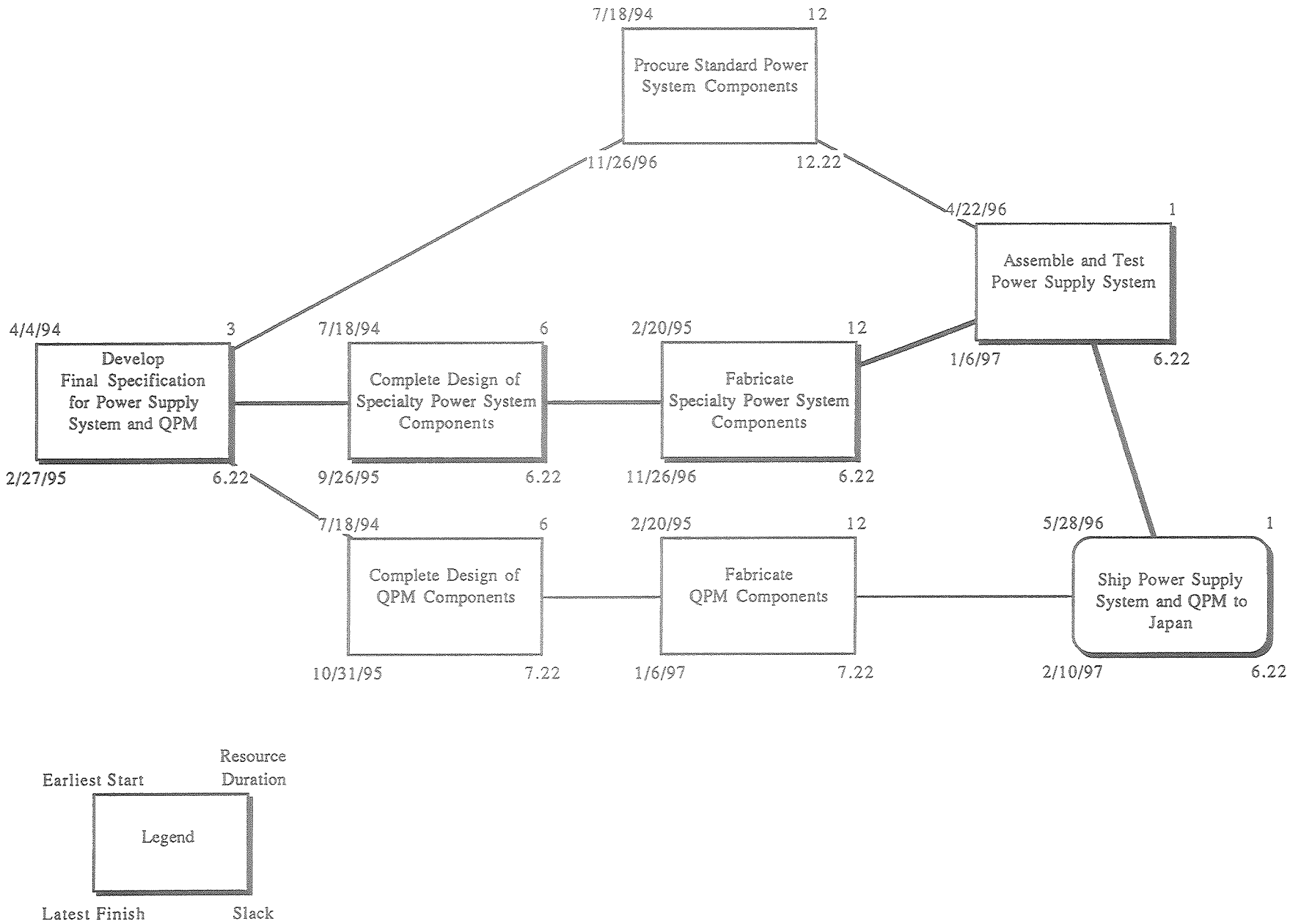

SDC Safety Report Project

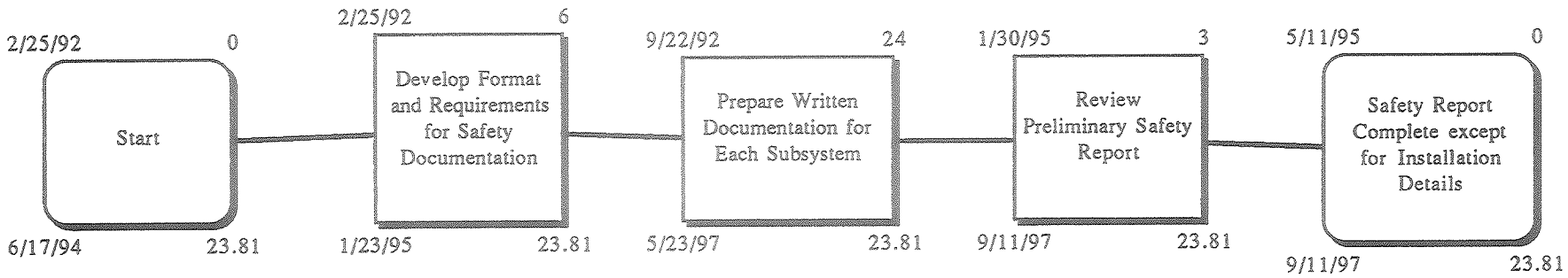

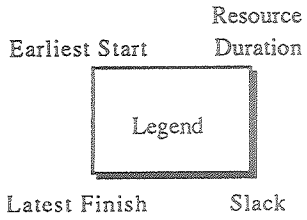

SDC Magnet Mapping Project

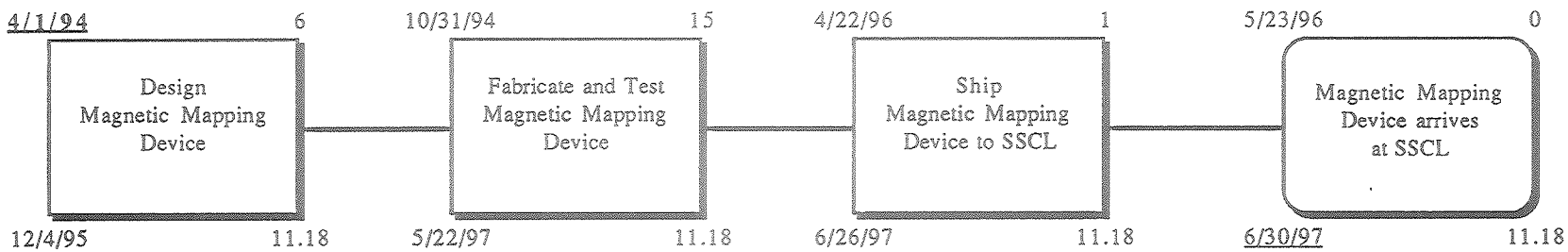

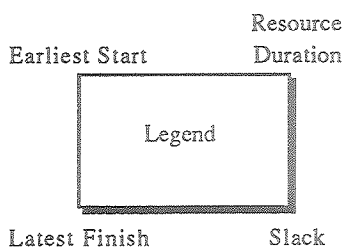

R&D AND CONSTRUCTION SCHEDULE PROPOSED

JFY 1990 4/1/90 – 3/31/91	BASIC R&D FOR CONDUCTOR & WINDING
JFY 1991 4/1/91 – 3/31/92	PROTOTYPE MAG (1/4 L) DEV. - SUPERCONDUCTOR (4.5 km) - COIL WINDING MACHINE
JFY 1992 4/1/92 – 3/31/93	- SUPECONDUCTOR (1.5 km) - COIL WINDING - CRYOSTAT ELEMENTS
JFY 1993 4/1/93 – 3/31/94	- MAGNET ASSEMBLY - 1/4 MAG. TEST (150%)
JFY 1994 4/1/94 – 3/31/95 S 1996 4/1/96 – 3/31/97	MAIN COIL CONSTRUCTION
JFY 1997 4/1/97 – 3/31/98	INSTALLATION INTO SDC

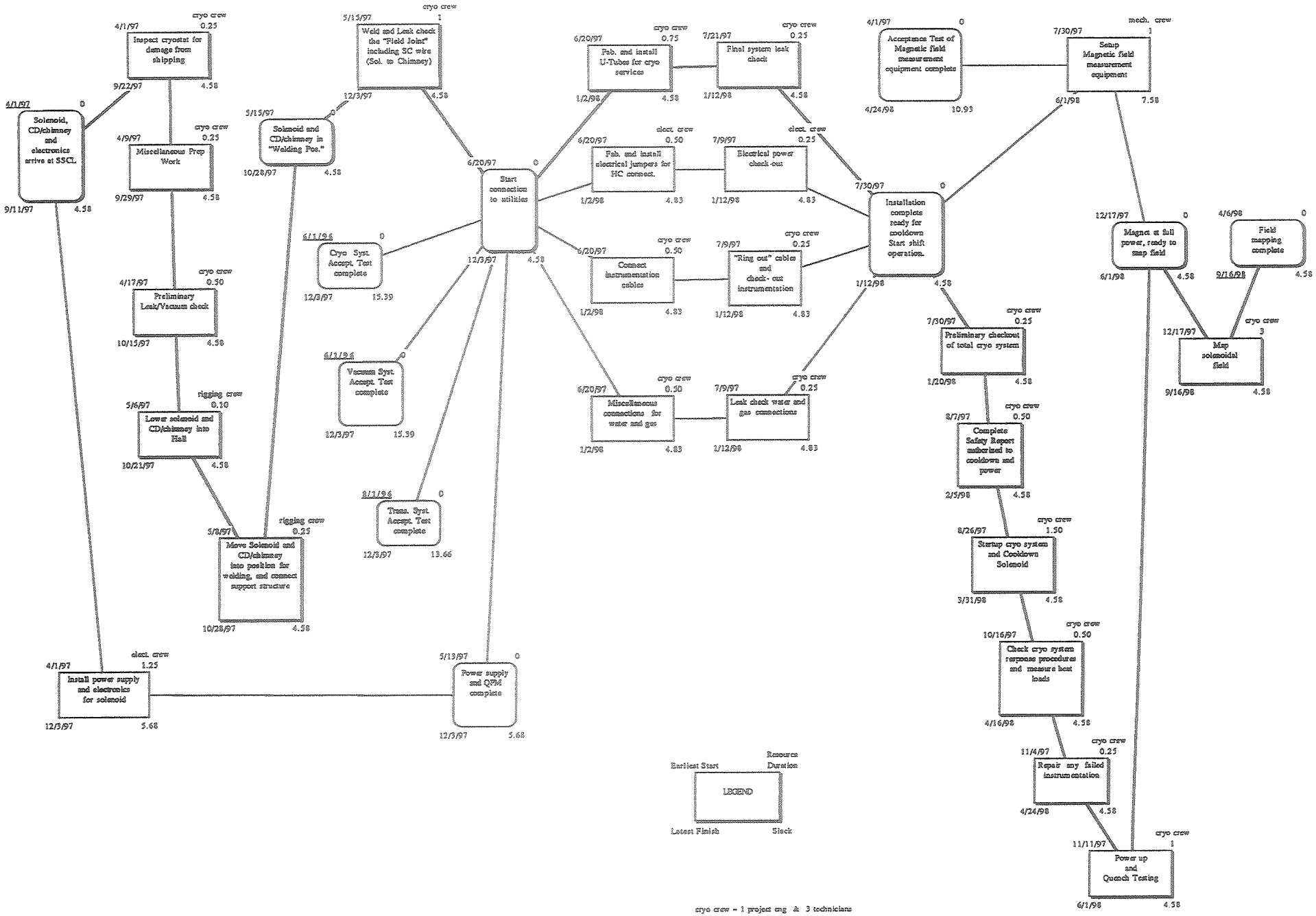

SC Solenoid Installation Schedule

R. Stanek, FNAL
5/24/91

cryo crew = 1 project eng & 3 technicians
elect. crew = 1 project eng & 3 technicians
mech. crew = 1 project eng & 3 technicians
Time periods are displayed in months
NOTE: Shift operations require 4 crews for 24 hr coverage.

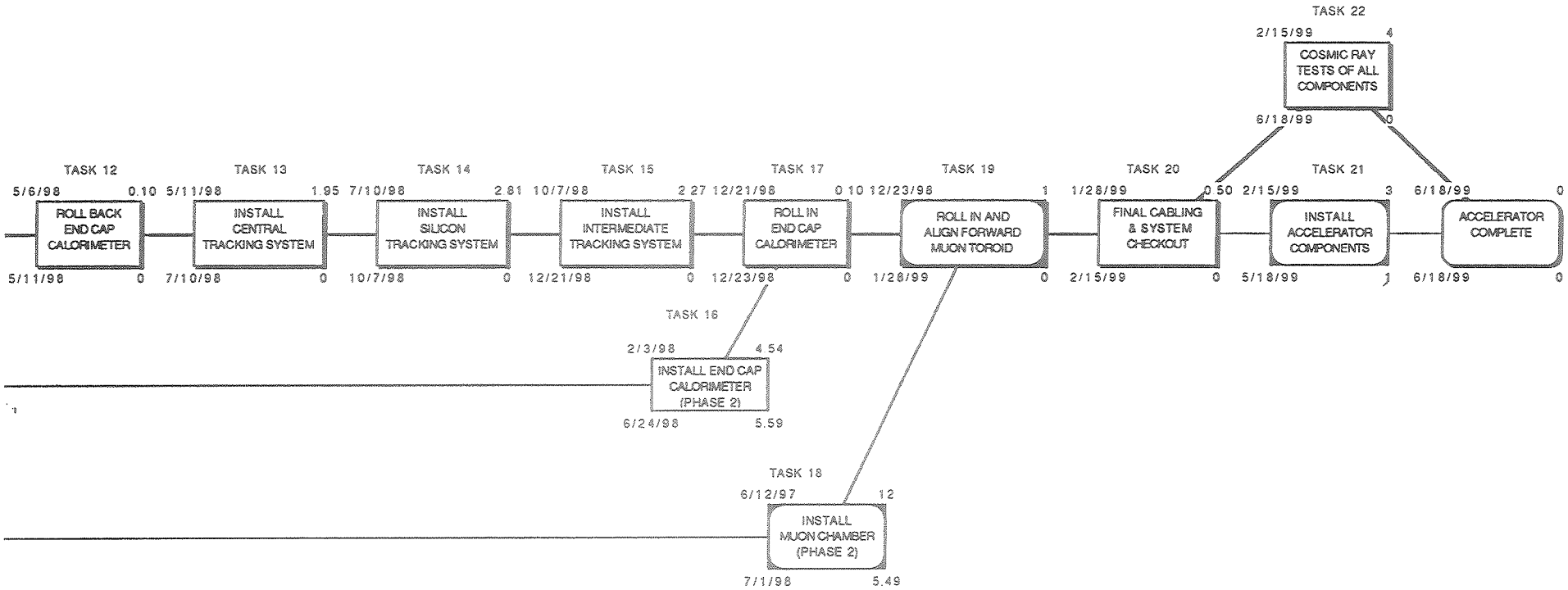
TASK 12
5/6/98 0.10
ROLL BACK END CAP CALORIMETER
5/11/98 0
TASK 13
5/11/98 1.95
INSTALL CENTRAL TRACKING SYSTEM
7/10/98 0
TASK 14
7/10/98 2.81
INSTALL SILICON TRACKING SYSTEM
10/7/98 0
TASK 15
10/7/98 2.27
INSTALL INTERMEDIATE TRACKING SYSTEM
12/21/98 0
TASK 17
12/21/98 0.10
ROLL IN END CAP CALORIMETER
12/23/98 0
TASK 19
12/23/98 1
ROLL IN AND ALIGN FORWARD MUON TOROID
1/28/99 0
TASK 20
1/28/99 0.50
FINAL CABLING & SYSTEM CHECKOUT
2/15/99 0
TASK 21
2/15/99 3
INSTALL ACCELERATOR COMPONENTS
5/18/99 1
6/18/99 0
ACCELERATOR COMPLETE
6/18/99 0
TASK 22
2/15/99 4
COSMIC RAY TESTS OF ALL COMPONENTS
6/18/99 0
TASK 16
2/3/98 4.54
INSTALL END CAP CALORIMETER (PHASE 2)
6/24/98 5.59
TASK 18
6/12/97 12
INSTALL MUON CHAMBER (PHASE 2)
7/1/98 5.49

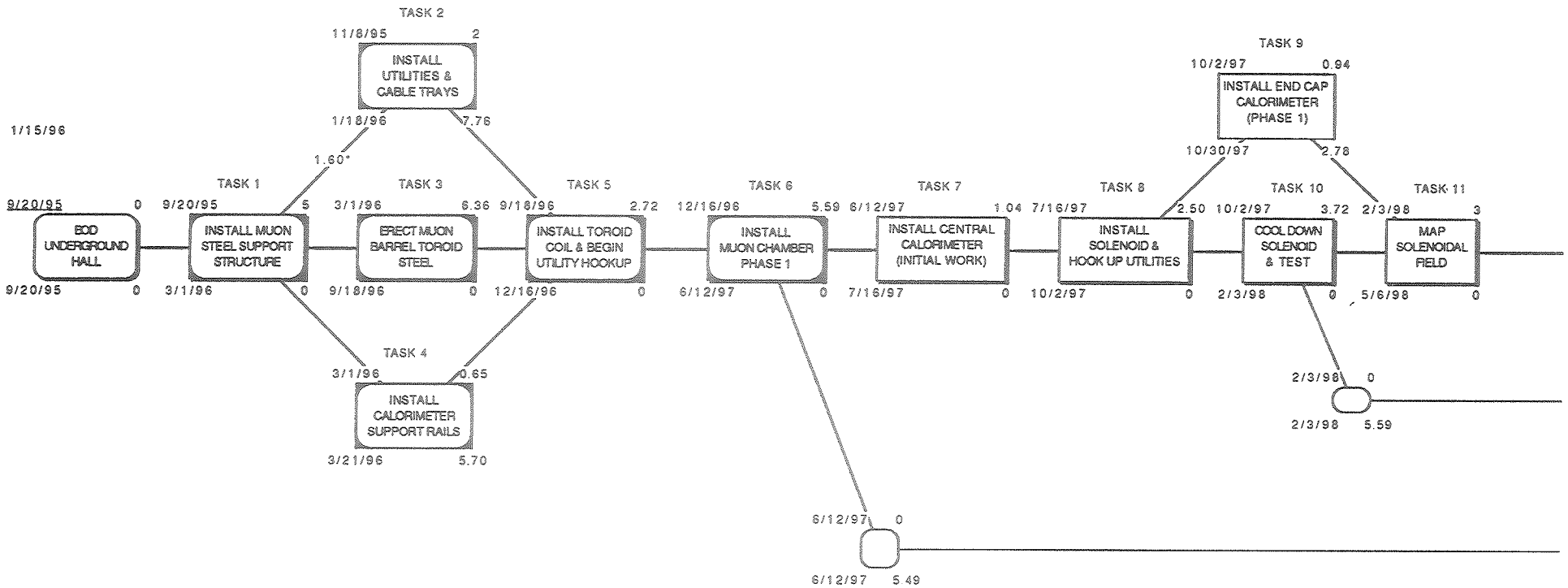

Earliest Start Duration

DURATION IN MONTHS

Earliest Finish Slack

SDC ASSEMBLY SEQUENCE

7/12/91 JNG

SDC SCINTILLATOR CALORIMETER DETECTOR CONSTRUCTION SCHEDULE - ALT A

MONTHS

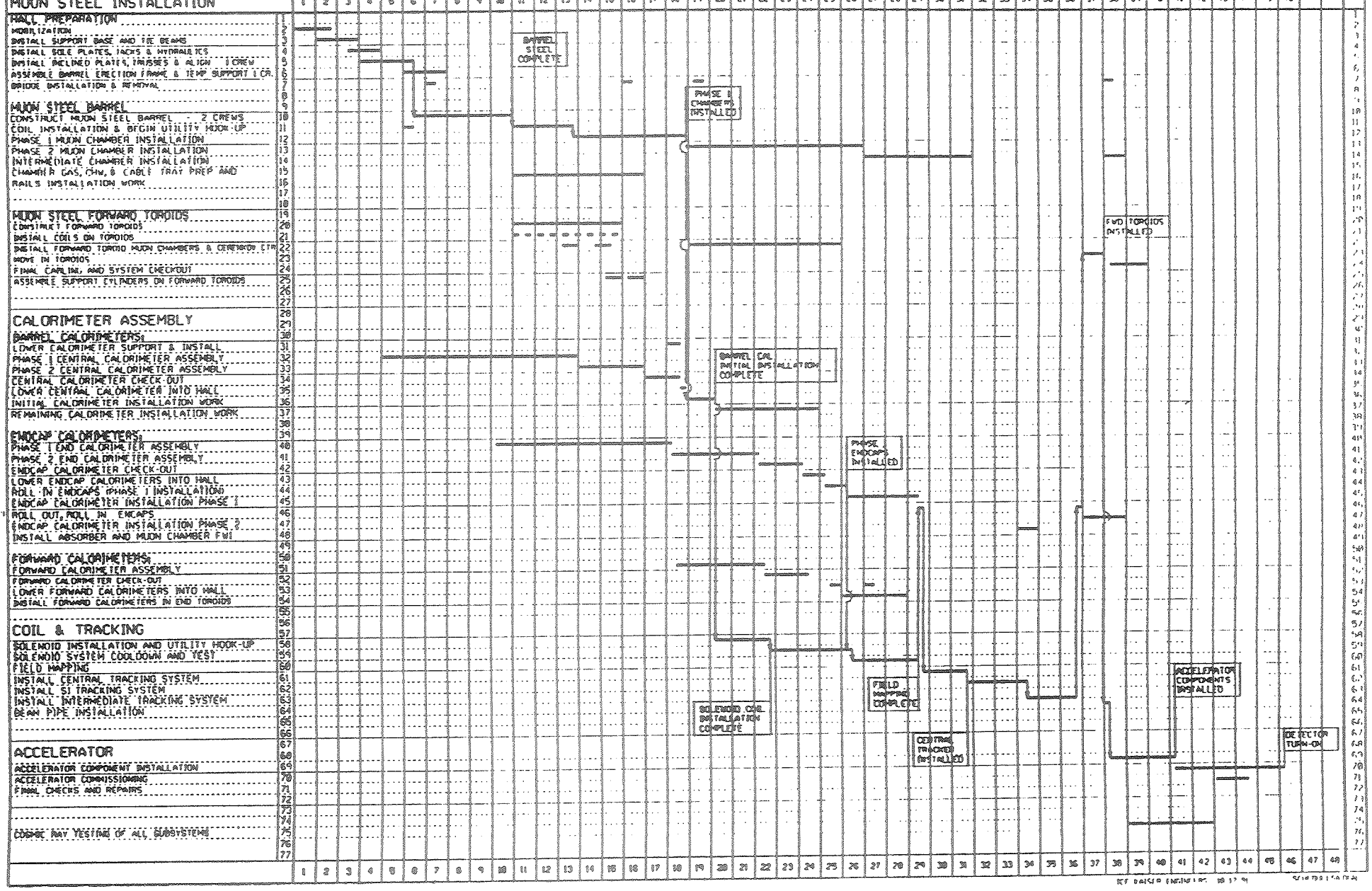

Installation Schedule Concentrating on Critical Path Activities

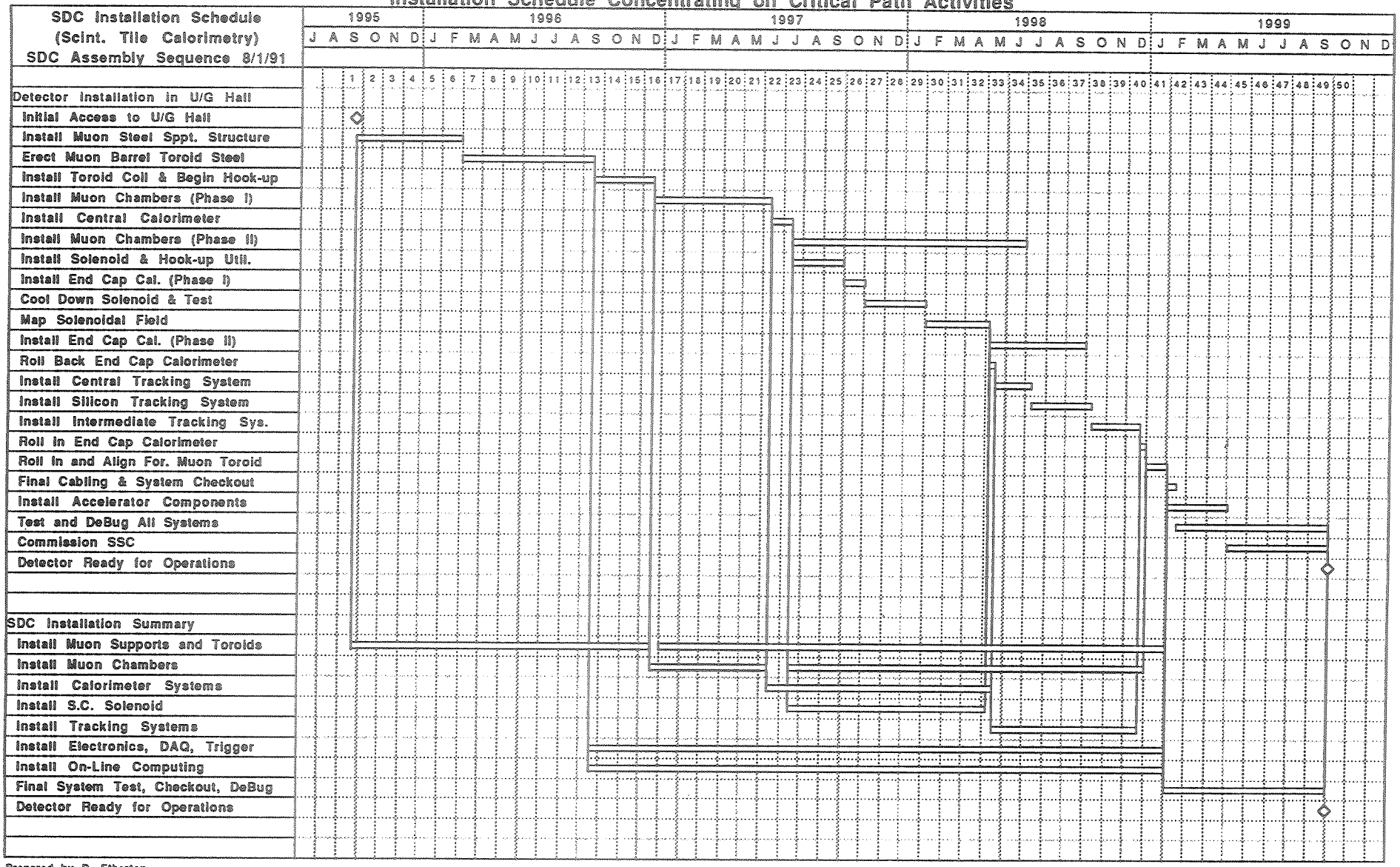

Prepared by D. Etherton

Wednesday, October 23, 1991

SDC Experimental Facilities Schedule

Cryogenic System Group Tasks	Finish
Title I U/G Design	3/16/92
Title II 100% U/G Design	11/23/92
Start Bid U/G	11/23/92
Bid & Award U/G Hall Contract	5/4/93
Mobilize U/G contract	7/7/93
Excavate Hall & Shafts	4/20/94
Construct Shell & Shafts	3/8/95
Construct Hall	6/9/95
Equip U/G Hall	1/31/96
BOD Detector Hall	1/31/96
Start Conceptual Design	3/3/94
Conceptual Design Utit Bldg.	10/3/94
Design Utility Bldg. North	5/4/95
IR-4 Ready Surface Facilities	7/25/95
Start Bid & Const. U. Bldg. N.	8/3/95
Bid & Award Util. Bldg. North	8/3/95
Construct Utility Bldg. North	2/29/96
BOD North Utility Bldg. North	2/29/96
Conceptual Design Cryo System	
Final Design Cryo system	5/27/94
Bid & Award Cryo System	9/30/94
Construct Cryo System	5/31/96
Install Cryo System-Hall/Sur	10/28/96
SC Coil Arrive SSCL	6/5/97
Solenoid Installation (Detector)	9/4/97
Cryo System Tests	12/3/97
Solenoid Cooldown & Test	1/5/98
Field Mapping	5/7/98
Detector Operation	10/8/98

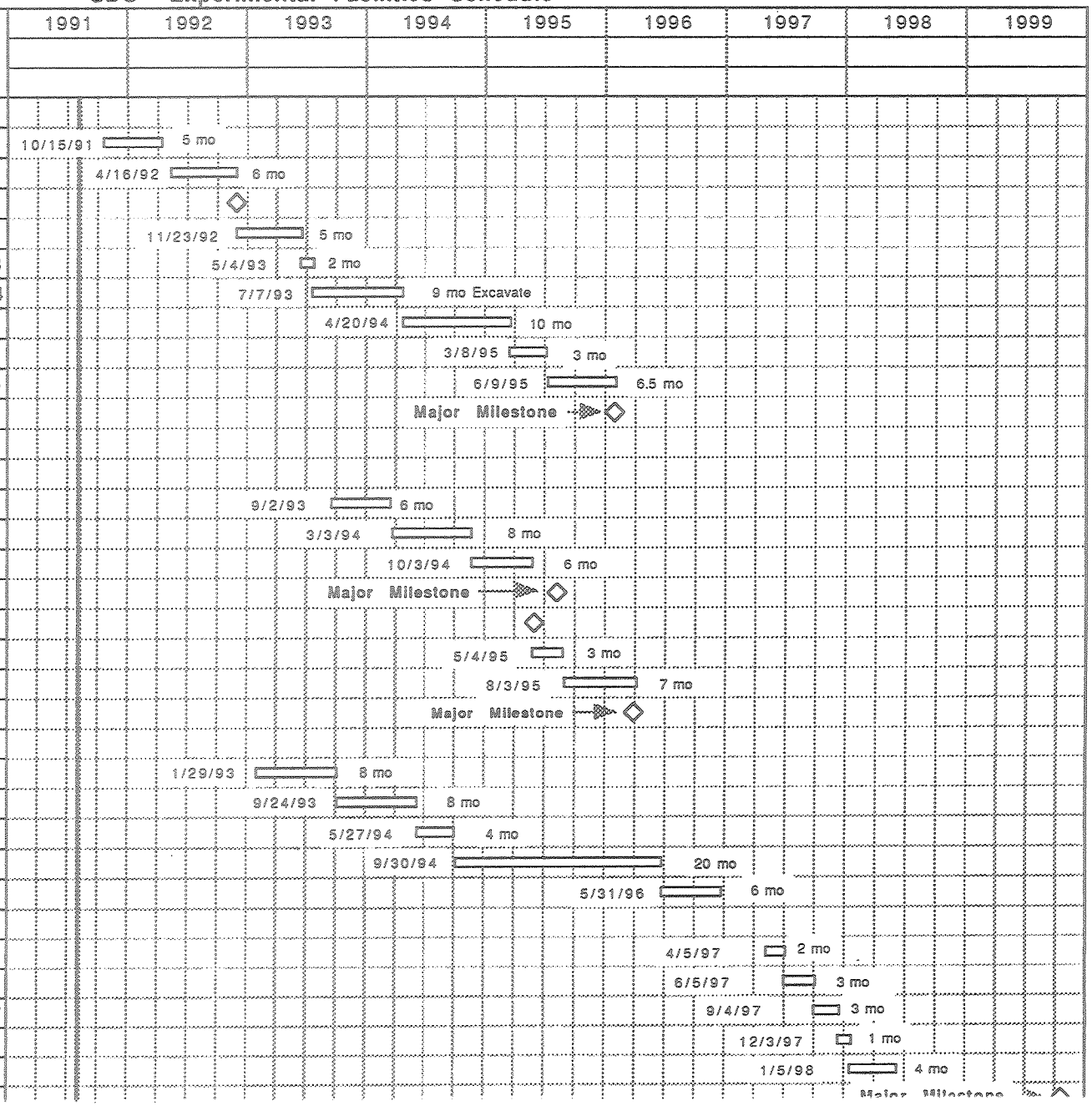

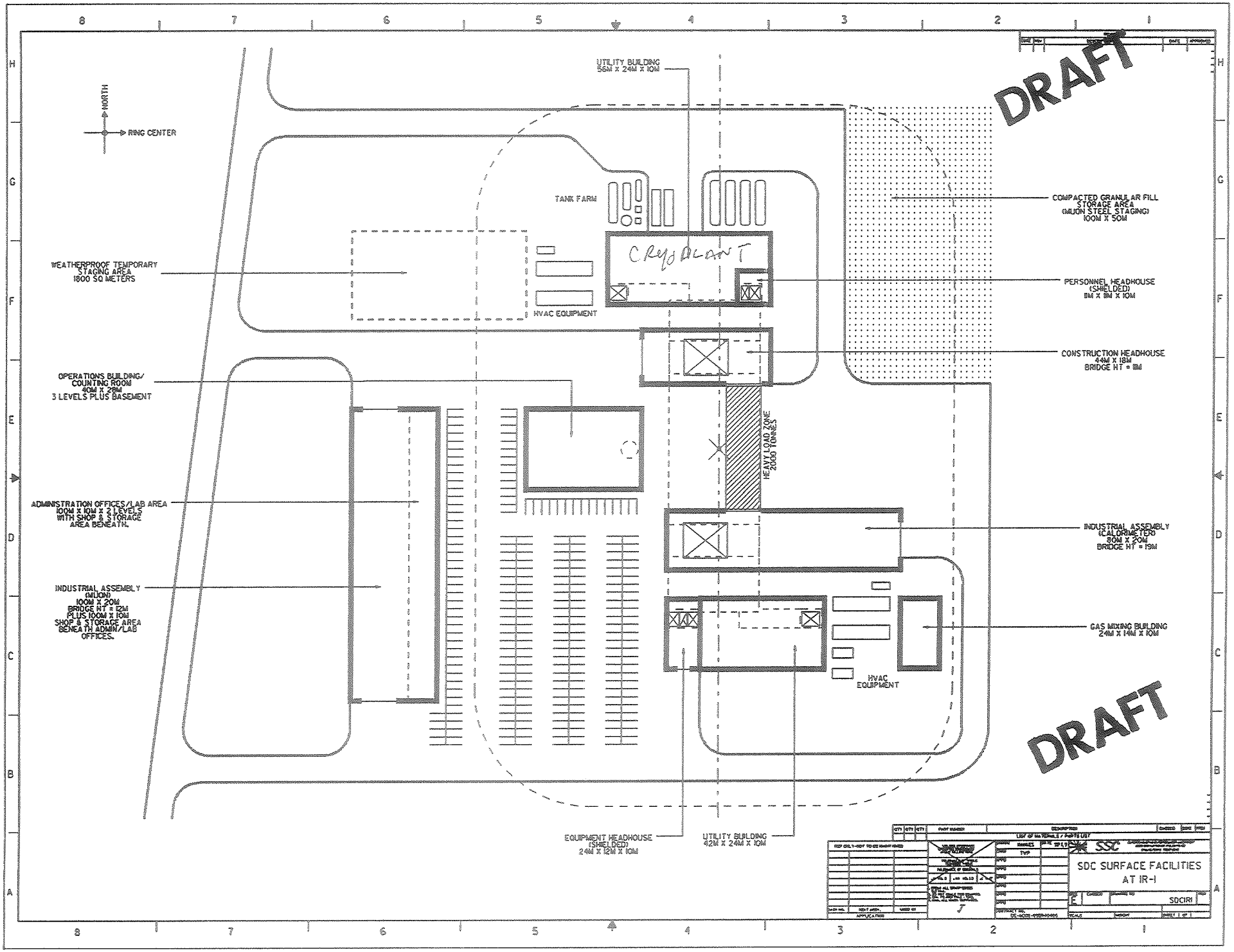
DRAFT
NORTH
RING CENTER
UTILITY BUILDING
56M X 24M X 10M
TANK FARM
COMPACTED GRANULAR FILL
STORAGE AREA
(MUON STEEL STAGING)
100M X 50M
WEATHERPROOF TEMPORARY
STAGING AREA
1800 SQ METERS
HVAC EQUIPMENT
PERSONNEL HEADHOUSE
(SHIELDED)
8M X 8M X 10M
CONSTRUCTION HEADHOUSE
44M X 18M
BRIDGE HT = 8M
OPERATIONS BUILDING/
COUNTING ROOM
40M X 29M
3 LEVELS PLUS BASEMENT
HEAVY LOAD ZONE
2000 TONNES
ADMINISTRATION OFFICES/LAB AREA
100M X 10M X 2 LEVELS
WITH SHOP & STORAGE
AREA BENEATH.
INDUSTRIAL ASSEMBLY
(CALORIMETER)
80M X 20M
BRIDGE HT = 19M
INDUSTRIAL ASSEMBLY
(MUON)
100M X 20M
BRIDGE HT = 12M
PLUS 100M X 10M
SHOP & STORAGE AREA
BENEATH ADMIN/LAB
OFFICES.
GAS MIXING BUILDING
24M X 14M X 10M
HVAC
EQUIPMENT
DRAFT
EQUIPMENT HEADHOUSE
(SHIELDED)
24M X 12M X 10M
UTILITY BUILDING
42M X 24M X 10M
SDC SURFACE FACILITIES
AT IR-1
SDCIR1

SDC CRYOGENIC SYSTEM

HELIUM COOLING TUBE - DESIGN PRESSURE

1) PRESSURE GENERATED BY QUENCH

2) ANSI B31.3 - 302.2.4 ALLOWANCES FOR PRESSURE AND TEMPERATURE VARIATIONS, METALLIC PIPING

1.3.6 & 1.3.8 Cooling tube (Stefanik)

SDC CRYOGENIC SYSTEM

PRESSURE IN HELIUM COOLING TUBE DURING A QUENCH

1) CALCULATE SUPPORT CYLINDER HEATING RATE ASSUMING ADIABATIC EDDY CURRENT HEATING.

2) CALCULATE PEAK PRESSURE WITH MILLER EQUATION USING MAXIMUM HEATING RATE FROM #1 TO DEFINE MAWP.

3) CALCULATE HELIUM VENTING RATE FROM COOLING TUBE TO SIZE RELIEF VALVES.

4) TWO CASES :
   - DISCHARGE THROUGH NEGLIGIBLE RESISTANCE OF POWER SUPPLY (0 OHMS)
   - DISCHARGE THROUGH 0.1 OHM DUMP RESISTOR

5) PRESSURE PROFILE IN TUBE AT PEAK PRESSURE.

1.3.6 - Max Quench Pressure (Stefanik)

SDC CRYOGENIC SYSTEM

PRESSURE IN HELIUM COOLING TUBE DURING A QUENCH

6) DISCHARGE THROUGH 0.1 OHM DUMP RESISTOR WITH QUENCH-BACK

FERMILAB ENGINEERING NOTE	SECTION	PROJECT SDC	SERIAL-CATEGORY	PAGE 1
SUBJECT: CALCULATE THE PEAK QUENCH PRESSURE USING THE EQUATION DEVELOPED BY J.R. MILLER, ET.AL.		NAME AMS		
		DATE 9/17/91	REVISION DATE	

$$P_{max} = 0.1\left[\frac{(\rho \dot{q})^2 \, \ell^3}{D_h}\right]^{0.36}$$ APPROXIMATE FORMULA

P ≡ ABSOLUTE PRESSURE, Pa-a

ρ ≡ DENSITY, kg/m^3

$\dot{q}$ ≡ SPECIFIC POWER INPUT, W/kg

ℓ ≡ HALF-LENGTH, m

D_h ≡ HYDRAULIC DIAMETER, m

1. DUMP RESISTOR = 0 Ω

$Q = 644{,}378$ J/s HEATING RATE

$$D_h = 4\,\frac{A_c}{P_w} = 4\left(\frac{578.469\ mm^2}{92.55\ mm}\right) = 25\ mm = 0.025\ m$$

COOLING TUBE VOLUME = $0.23\ m^3$

$\ell = 400\ m$ FOR ONE WAY VENTING

$$P_{max} = 0.1\left[\frac{\left(644{,}378\,\frac{J}{s} * \frac{1}{0.23\,m^3}\right)^2 (400\,m)^3}{0.025\,m}\right]^{0.36}$$

DIMENSIONS: $\dfrac{J^2}{s^2 \cdot m^6}\,\dfrac{m^3}{m} = \dfrac{W^2}{m^4}$ OK

$P_{max} = 10.7$ MPa-a = 1551 psia = 106 Atm-a

534393

2. DUMP RESISTOR = 0.1 Ω, WITHOUT QUENCH-BACK

$Q = 237{,}527$ J/s HEATING RATE

$$P_{max} = 0.1 \left[\frac{\left(\frac{237{,}527}{0.23}\right)^2 (400)^3}{0.025} \right]^{0.36}$$

$= 5.2$ MPa-a $= 756$ psia $= 51.4$ Atm-a

1.3.8 Design pressure of tube	SECTION	PROJECT SDC	SERIAL-CATEGORY	PAGE 1

SUBJECT	NAME	
CALCULATE THE STRESSES IN THE PROPOSED OBROUND SOLENOID COOLING TUBE	AMS	
	DATE 10/23/91	REVISION DATE

CALCULATE THE TUBING WALL STRESSES FOLLOWING THE PROCEDURE GIVEN IN APP 13, ASME SEC VIII DIV 1.

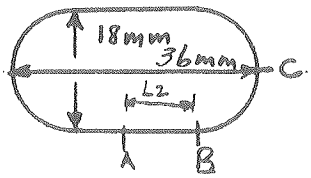

$R = 9\ mm = 0.354\ in$
$L_2 = 9\ mm = 0.354\ in$
$t_1 = 3\ mm = 0.118\ in$
$t_2 = 3\ mm = 0.118\ in$
$E = 1$
$P = 2000\ psi$ ← Assume

(a) MEMBRANE STRESS

IN SEMICYLINDRICAL SECTIONS

$$(S_m)_B = PR/t_1$$

$$= \frac{2000\,(9/25.4\ in)}{(3/25.4\ in)} = 6{,}000\ psi \quad (1)$$

$$(S_m)_C = P(R+L_2)/t_1$$

$$= 2000\ psi\ \frac{(9+9)\ mm}{3\ mm} = 12{,}000\ psi \quad (2)$$

IN SIDE PLATES

$$S_m = \frac{PR}{t_2} = (S_m)_B = 6{,}000\ psi \text{ since } t_2 = t_1 \quad (3)$$

546707

(b) BENDING STRESS IN SEMICYLINDRICAL SECTIONS —

$$(\sigma_b)_B = \frac{P L_2 c}{6 I_1}\left(3L_2 - C_1/A\right) \qquad (4)$$

$$A = R\,(2\gamma + \pi\alpha_2),\ in$$

$$A = 9mm * \frac{in}{25.4\,mm}\left[2\left(\frac{9}{9}\right) + \pi\left(\frac{3}{3}\right)^3\right] = 1.822\ in$$

$$C_1 = R^2\,(2\gamma^2 + 3\gamma\pi\alpha_2 + 12\alpha_2),\ in^2$$

$$C_1 = \left(\frac{9}{25.4}\,in\right)^2\left[2 * \left(\frac{9}{9}\right)^2 + 3\left(\frac{9}{9}\right)\pi\left(\frac{3}{3}\right)^3 + 12\left(\frac{3}{3}\right)^3\right]$$

$$= 2.941\ in^2$$

$$(\sigma_b)_B = \frac{\pm 2000\ psi\ (0.354\,in)\left(\frac{0.118\,in}{2}\right)}{6\left(\frac{0.118^3\,in^3}{12}\right)}\left[3 * (0.354\,in) - \frac{2.941\,in^2}{1.822\,in}\right]$$

$$= 28{,}076\ psi \qquad (4)$$

$$(\sigma_b)_C = \pm\frac{P L_2 c}{6 I_1}\left[3(L_2 + 2R) - C_1/A\right] \qquad (5)$$

$$= \frac{\pm 2000\,(0.354)\left(\frac{0.118}{2}\right)}{6\ \frac{0.118^3}{12}}\left[3\left(0.354 + 2(0.354)\right)in - \frac{2.941\,in^2}{1.822\,in}\right]$$

$$= 79{,}924\ psi \qquad (5)$$

IN SIDE PLATES

$$(S_b)_A = \frac{P L_2 C_1 c}{6 A I_2} \qquad (6)$$

$$= \frac{\pm 2000 \text{ psi } (0.354 \text{ in})(2.941 \text{ in}^2)\left(\frac{0.118}{2}\right) \text{ in}}{6\,(1.822 \text{ in})\left(\frac{0.118}{12}\right)^3 \text{ in}^3}$$

$$= 82{,}076 \text{ psi} \qquad (6)$$

$$(S_b)_B = \frac{P L_2 c}{6 I_2}\left(3L_2 - C_1/A\right) \qquad (7)$$

$$= \frac{\pm 2000 \text{ psi } (0.354 \text{ in})\left(\frac{0.118}{2} \text{ in}\right)}{6\,\frac{(0.118^3 \text{ in}^3)}{12}}\left[3(0.354 \text{ in}) - \frac{2.941 \text{ in}^2}{1.822 \text{ in}}\right]$$

$$= 28{,}076 \text{ psi} \qquad (7)$$

(c) TOTAL STRESSES

IN SEMI CYLINDRICAL SECTIONS

$(S_T)_B = 6{,}000 + 28{,}076 = 34{,}076$ psi

$(S_T)_C = 12{,}000 + 79{,}924 = 91{,}924$ psi

IN SIDE PLATES

$(S_T)_A = 6{,}000 + 82{,}076 = 88{,}076$ psi

$(S_T)_B = 6{,}000 + 28{,}076 = 34{,}076$ psi

Therefore this tube is not acceptable for 2000 psi.

SDC CRYOGENIC SYSTEM

1.3.8 ΔP in LHe Circuit (Stefanik)

HELIUM CIRCUIT PRESSURE DROP

COOLDOWN AND QUENCH RECOVERY

LINE	EQIV. LENGTH (m)	INSIDE DIAM (cm)
SUPPLY	239	2.8
SOLENOID	372	3
RETURN	231	5.5

SDC CRYOGENIC SYSTEM

COLDMASS = 24 tonnes
DN #130

COOLDOWN IN 10 DAYS

GAS INLET TEMP	100K BELOW AVE SOLENOID TEMP	50K BELOW AVE SOLENOID TEMP
COOLING RANGE	300 → 250 K	300 → 250 K
MASS FLOW	16 g/s	36 g/s
ΔP VALUES (psi):		
RETURN	2.4	12.1
SOLENOID	35.7	180.9
SUPPLY	19	96.2
SOLENOID INLET PRESSURE	38.1 psig (0.26 MPa)	193 psig (1.3 MPa)
SUPPLY PRESSURE	57.1 psig (0.4 MPa)	289.2 psig (2 MPa)
	CALCULATED	RATIO $(36/16)^2$

SDC CRYOGENIC SYSTEM

ENERGY DEPOSITED IN COLD MASS = 190 MJ (DN #130)

QUENCH RECOVERY IN 4 HOURS

FLOW RATE = 60 g/s AT 75 K

	ALL GAS FLOW	LHe IN SUPPLY LINE
ΔP VALUES (psi):		
RETURN	5.5	5.5
SOLENOID	65.2	65.2
SUPPLY	32	1
SOLENOID INLET PRESSURE	70.7 psig (0.5 MPa)	70.7 psig (0.5 MPa)
SUPPLY PRESSURE	102.7 psig (0.7 MPa)	65 psig (0.45 MPa) MIN.
ΔP DUE TO ELEV. CHANGE	—	~8 psi

NOTE: LHe SUPPLY DEWAR PRESSURE ≐ 10 psig (0.07 MPa) SATURATED CONDITION

1.4.2 Warren truss support system (Krebs)

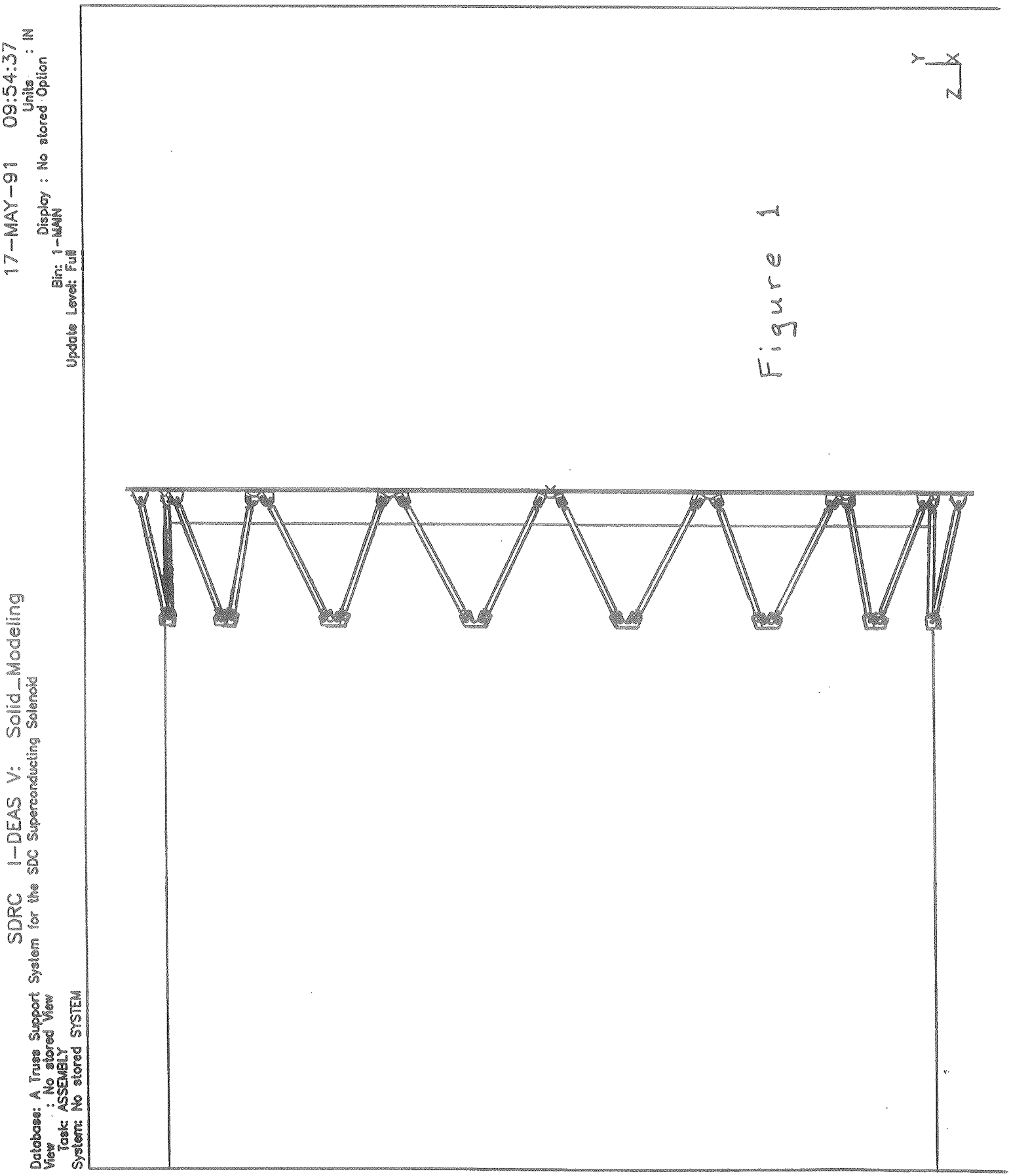

Figure 1

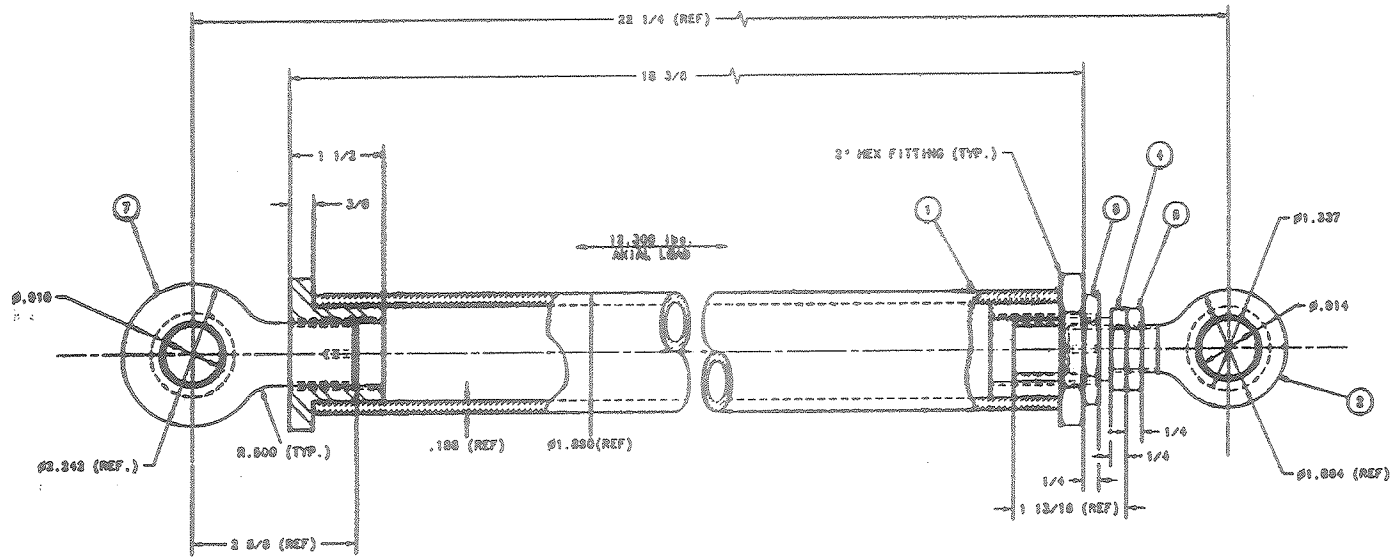

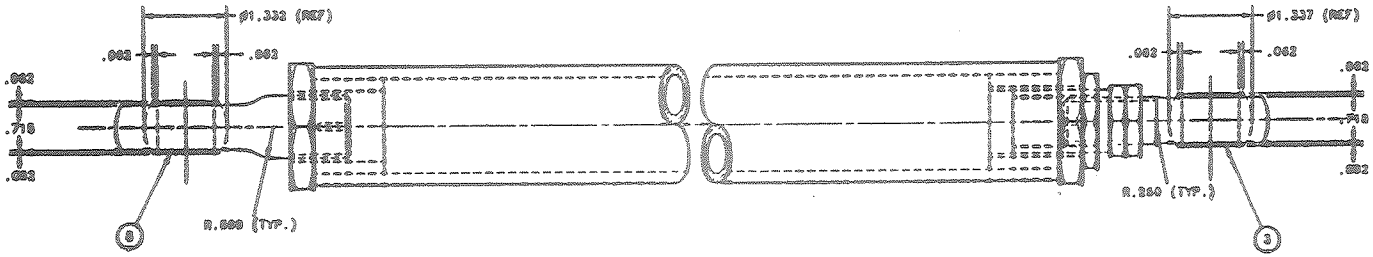

FIGURE 7

REV.	DESCRIPTION	DRAWN / APPROVED	DATE

ITEM NO.	PART NO.	DESCRIPTION OR SIZE	QTY.
8	COMMER'L	SPHERICAL BEARING (MALE END) ALUMINUM [illegible]	1
7	COMMER'L	ROD END (MALE END) ALUMINUM 2010-T651 [illegible]	1
6	COMMER'L	[illegible]	1
5	COMMER'L	[illegible]	1
4	COMMER'L	[illegible]	1
3	COMMER'L	SPHERICAL BEARING (FEMALE END) ALUMINUM [illegible]	1
2	COMMER'L	[illegible]	1
1	COMMER'L	[illegible]	1

PARTS LIST

UNLESS OTHERWISE SPECIFIED	DRAWN	J. [illegible] 8/91
TOLERANCES	CHECKED	D. FRIED 8/30/91
0-1/32	ENGINEER	[illegible] 8/30/91
0-1/32	APPROVED	
	MFG. OK	
125	MATERIAL	AS LISTED ABOVE

D

FERMI NATIONAL ACCELERATOR LABORATORY
UNITED STATES DEPARTMENT OF ENERGY

SOLENOIDAL DETECTOR COLLABORATION
SUPERCONDUCTING SOLENOID
CONCEPTUAL SUPPORT ROD ASSEMBLY

SCALE FULL | DRAWING NUMBER | SHEET NO. 1 | REV.

1.4.3 Pool rack support system (Krebs)

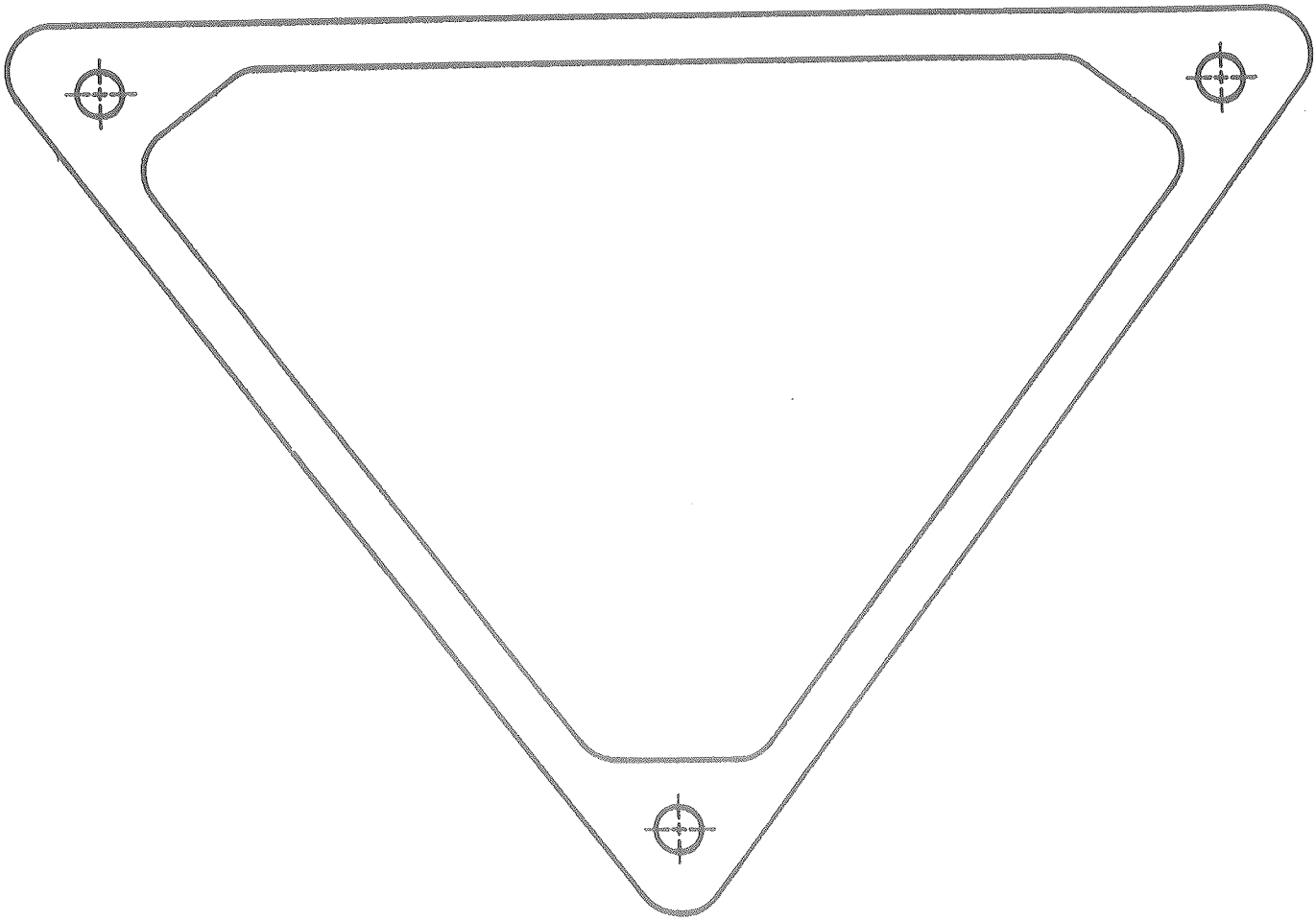

TYPICAL COIL SUPPORT (FIXED END)

SCALE 1:4

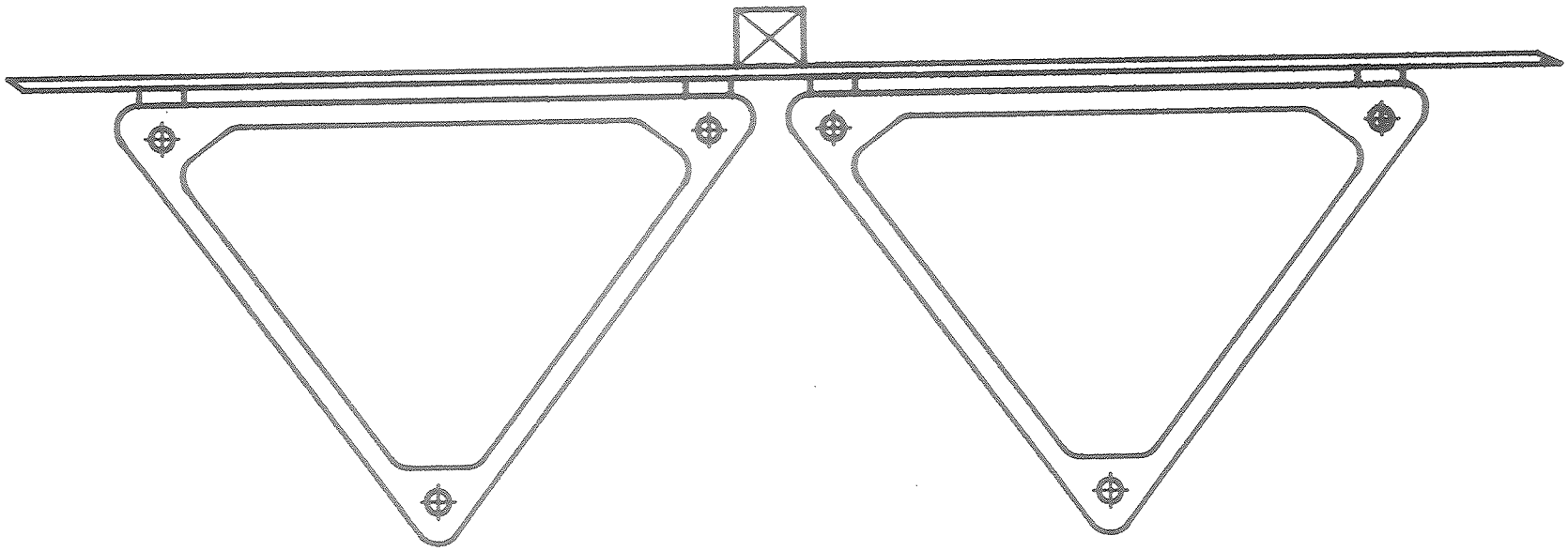

COIL/EXTERNAL SUPPORT ORIENTATION

SCALE 1:8

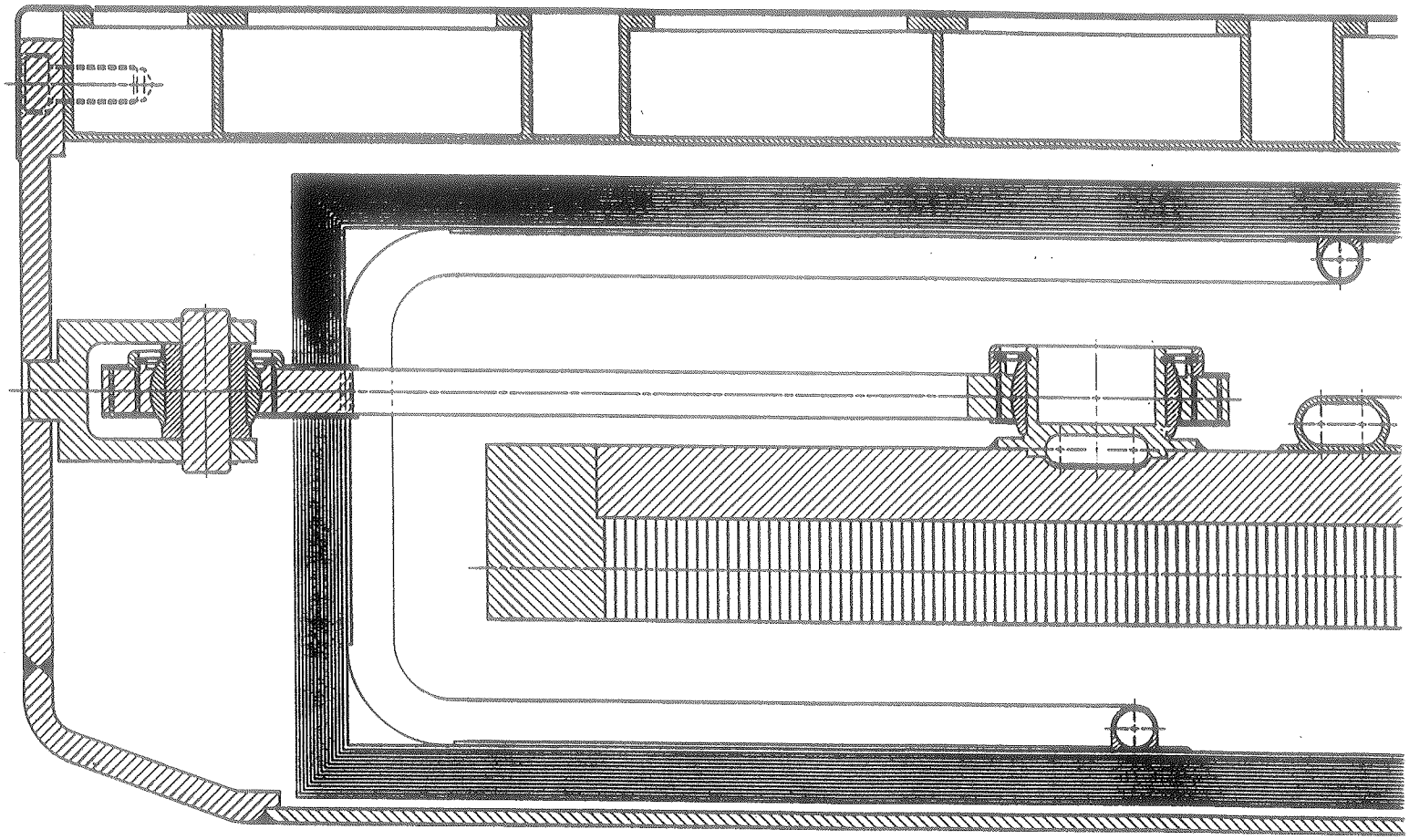

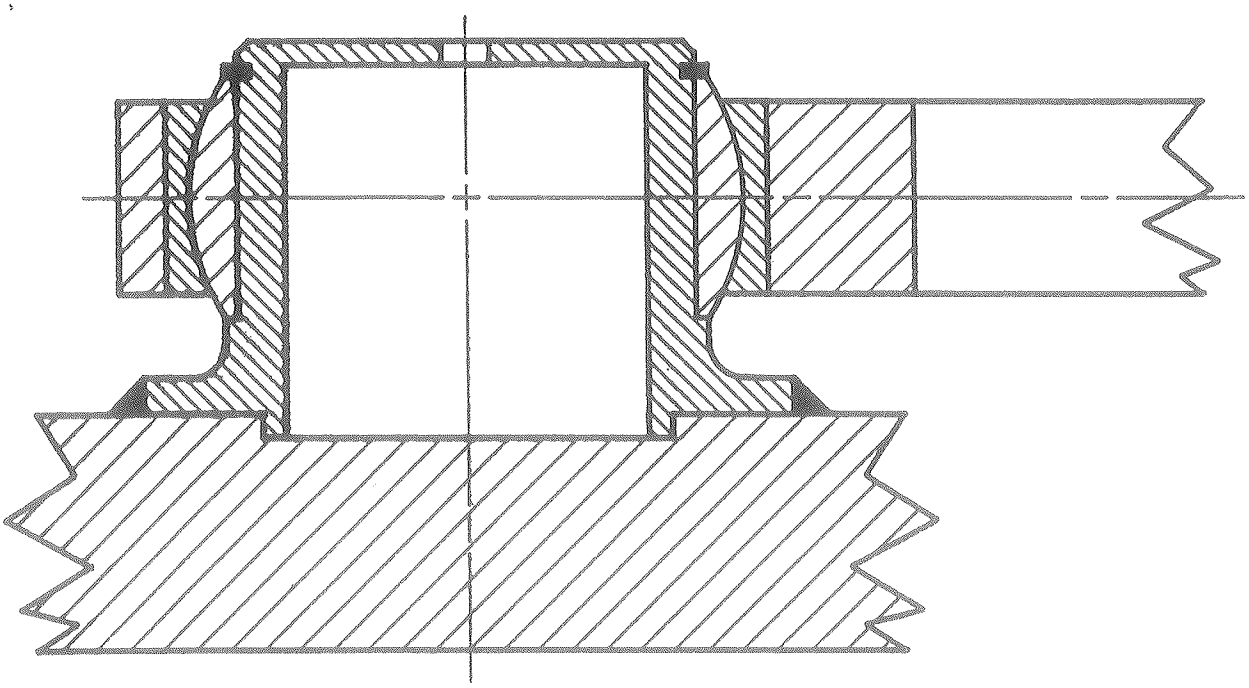

TYPICAL SUPPORT TO COIL CONNECTION

SCALE 1:1

1.4.4 Separated-function supports (Krebs)

Dedicated Function Support System (DFS)

Parameters: (Radial Supports)
1.138" Dia. Pins (2219-T851 Aluminum)
1" x 3/16" GFRP Tension Strap
1.125" Dia. Tensioning Nut (7075-T6 Aluminum)
2.250" Dia. x 2.250" wide Knuckles (2219-T851 Aluminum)

60 tonnes total radial decentering load
Maximum allowable stress not to exceed 1/4 minimum ultimate

Parameters: (Axial Supports)
1.500" Dia. x .187" Wall Inconel 718 Outer Tension Tube
1.125" Dia. x .174" Wall GFRP Inner Compression Tube
1.211" Dia. Pins (2219-T851 Aluminum)
2.926" Dia. x .952" Wide Rod Ends (2219-T851 Aluminum)
3.000" Dia. x 1.722" Thk. Knuckles (2219-T851 Aluminum)

66 tonnes total axial decentering load
Maximum allowable stress not to exceed 1/4 minimum ultimate

Radiation Length V.S. Pseudorapidity

for warrentruss support system

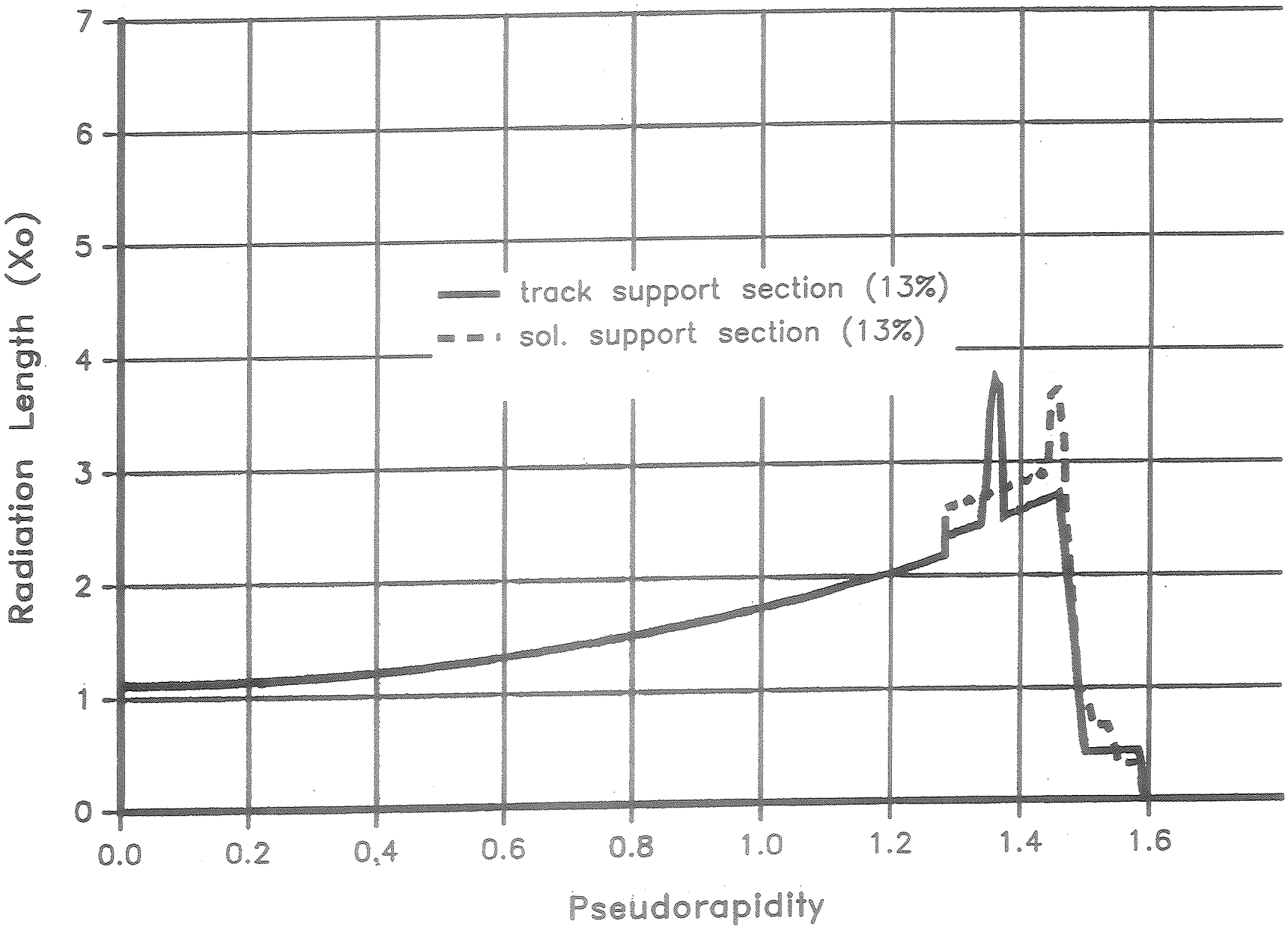

1.4.5 Comparison of supports (Lee)

Radiation Length V.S. Pseudorapidity

for DFS support system

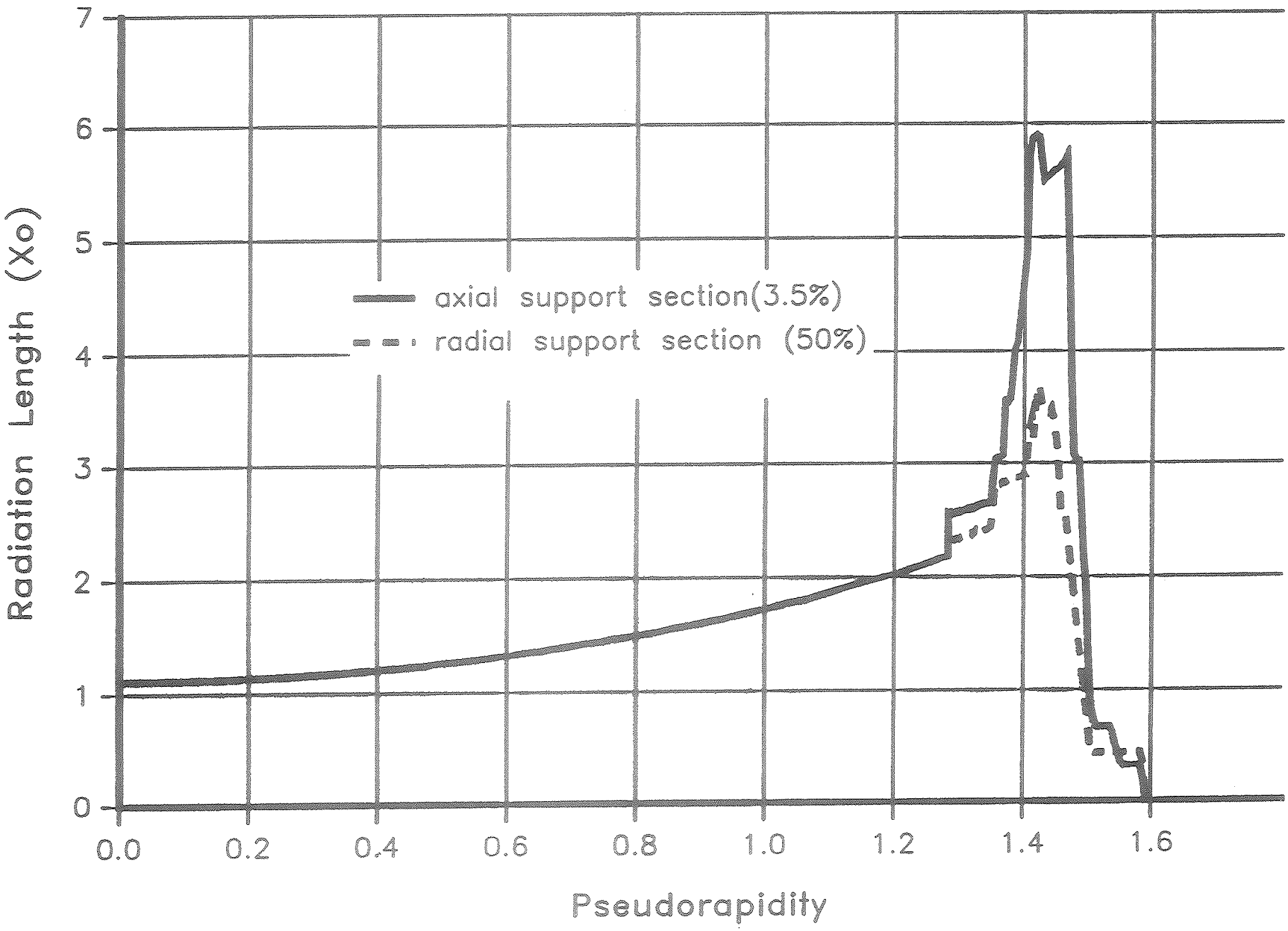

1.5.2 – Isogrid shell (Grozis)

ISOGRID
(Key Points)

* A lattice of intersecting ribs forming an array of equilateral triangles

* Characteristics

  - Isotropic (no directions of instability or weakness)
  - Poisson's ratio = 1/3
  - Efficient in compression and bending

* Advantages:

  - Easily analyzed
  - Can be optimized for wide range of loading intensities
  - Standard pattern for attachment (nodes accommodate equipment mounting without change)
  - Readily reinforced for concentrated loads and cutouts
  - Redundant load paths
  - Less structural depth

* In use on major space programs, and extensively investigated and tested on space shuttle study effort, used in industry

Design Standards
Isogrid Shell

* Cylinder to have a design collapse pressure of at least 30 psid - external

* Cylinder to have a safety factor of at least two on Euler buckling caused by the axial load.

* Allowable stress that is permitted by Section VIII, Division 1 of the ASME Pressure Vessel Code for the aluminum alloy used.

Accomplishments to Date
Isogrid Prototype Shell

1) Fermi has received all structural analysis and engineering for the prototype Isogrid shell from P.S. Associates.

2) Companies that have expertise in Isogrid have been contacted for the possibility of prototype work and development, i.e. machining, forming, welding.

3) Two Isogrid plates ~45" x 25" with full size pockets are now being machined at Fermilab.

   (These plates will then be formed)

4) Design/drafting working is continuing on the prototype shell.

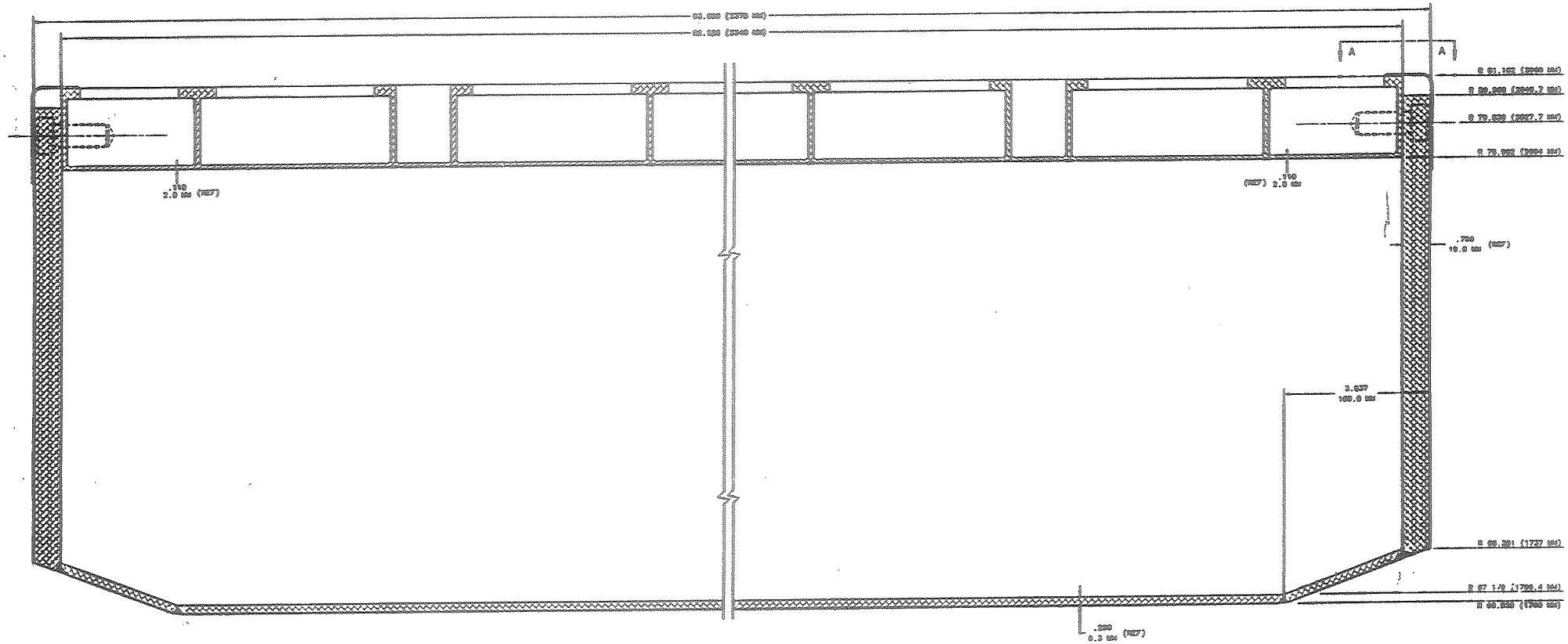

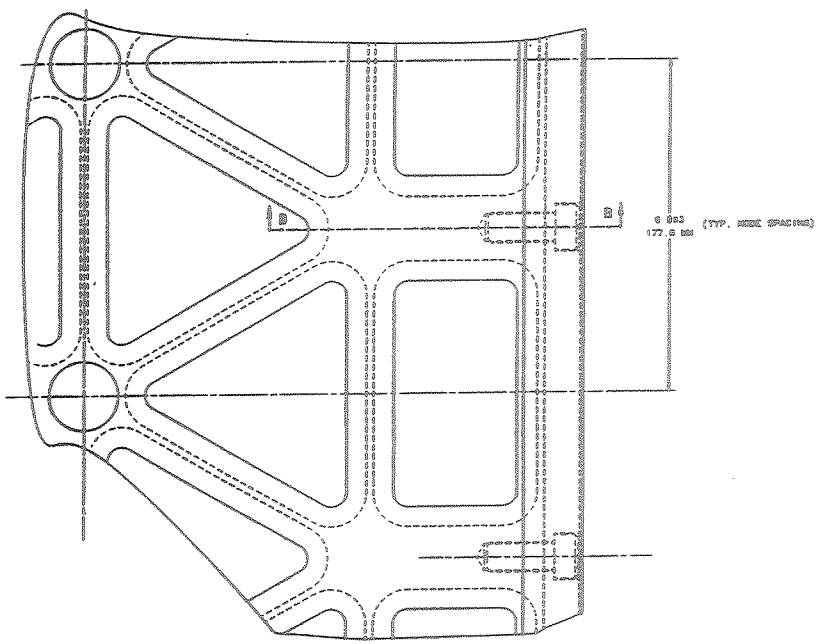

VIEW A-A

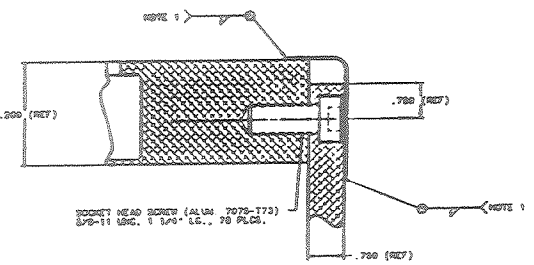

VIEW B-B

NOTE:

1. VACUUM TEST - NO LEAK SHALL BE DETECTABLE ON THE MOST SENSITIVE SCALE OF A HELIUM LEAK DETECTOR WITH A MINIMUM SENSITIVITY OF 10^{-9} ATM CC/SEC.

PARTS LIST

FERMI NATIONAL ACCELERATOR LABORATORY
UNITED STATES DEPARTMENT OF ENERGY

SOLENOIDAL DETECTOR COLLABORATION
SUPERCONDUCTING SOLENOID
PROTOTYPE MAGNET; CRYOSTAT ASSEMBLY

FULL | SSC-SDD-000014 | 1

SDRC I-DEAS VI: Solid_Modeling 9-OCT-91 14:00:17

Database: isogrid tank
View : No stored View
Task: Assembly
System: 2-ISOGRID PLATE

Units : IN
Display : No stored Option
Bin: 1-MAIN
Update Level: Full

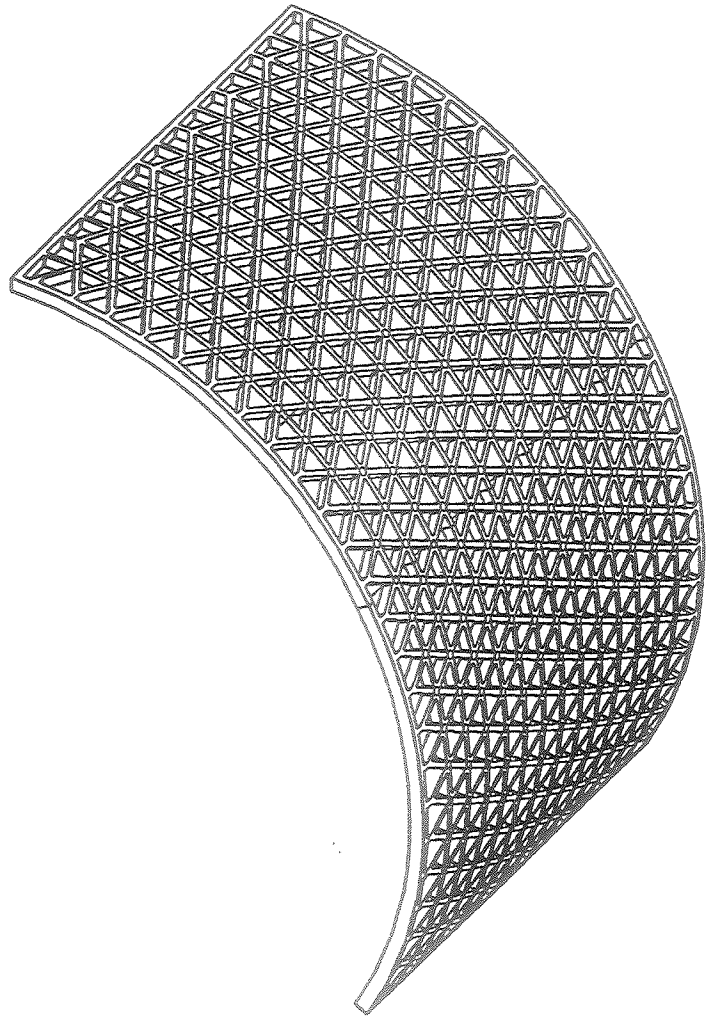

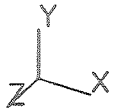

REV.	DESCRIPTION	DRAWN	DATE
		APPROVED	DATE

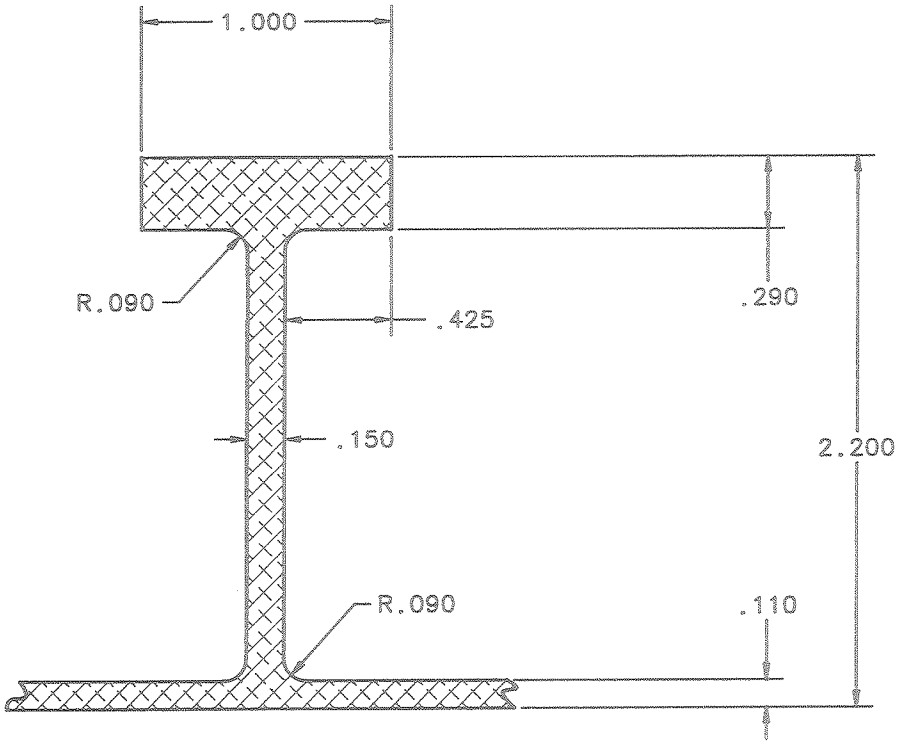

NOTES:

1. NODE SPACING IS 6.9930 INCHES.
2. EFFECTIVE THICKNESS IS 0.3874 INCHES.

ITEM NO.	PART NO.	DESCRIPTION OR SIZE	QTY. REQ.

PARTS LIST

UNLESS OTHERWISE SPECIFIED			ORIGINATOR	C. GROZIS	8/91
FRACTIONS	DECIMALS	ANGLES	DRAWN	D. FRIEND	8/14/91
± 1/64	±.005	± 1°	CHECKED		
1. BREAK ALL SHARP EDGES 1/64 MAX. 2. DO NOT SCALE DRWG. 3. DIMENSIONING IN ACCORD WITH ANSI Y14.5 STD'S.			APPROVED		
			USED ON		
125 √ MAX. ALL MACHINED SURFACES			MATERIAL ALUMINUM 2219-T851		B

FERMI NATIONAL ACCELERATOR LABORATORY
UNITED STATES DEPARTMENT OF ENERGY

SOLENOIDAL DETECTOR COLLABORATION
SUPERCONDUCTING SOLENOID
ISOGRID CROSS SECTION

SCALE	DRAWING NUMBER	SHEET NO.	REV.
2 : 1		1	

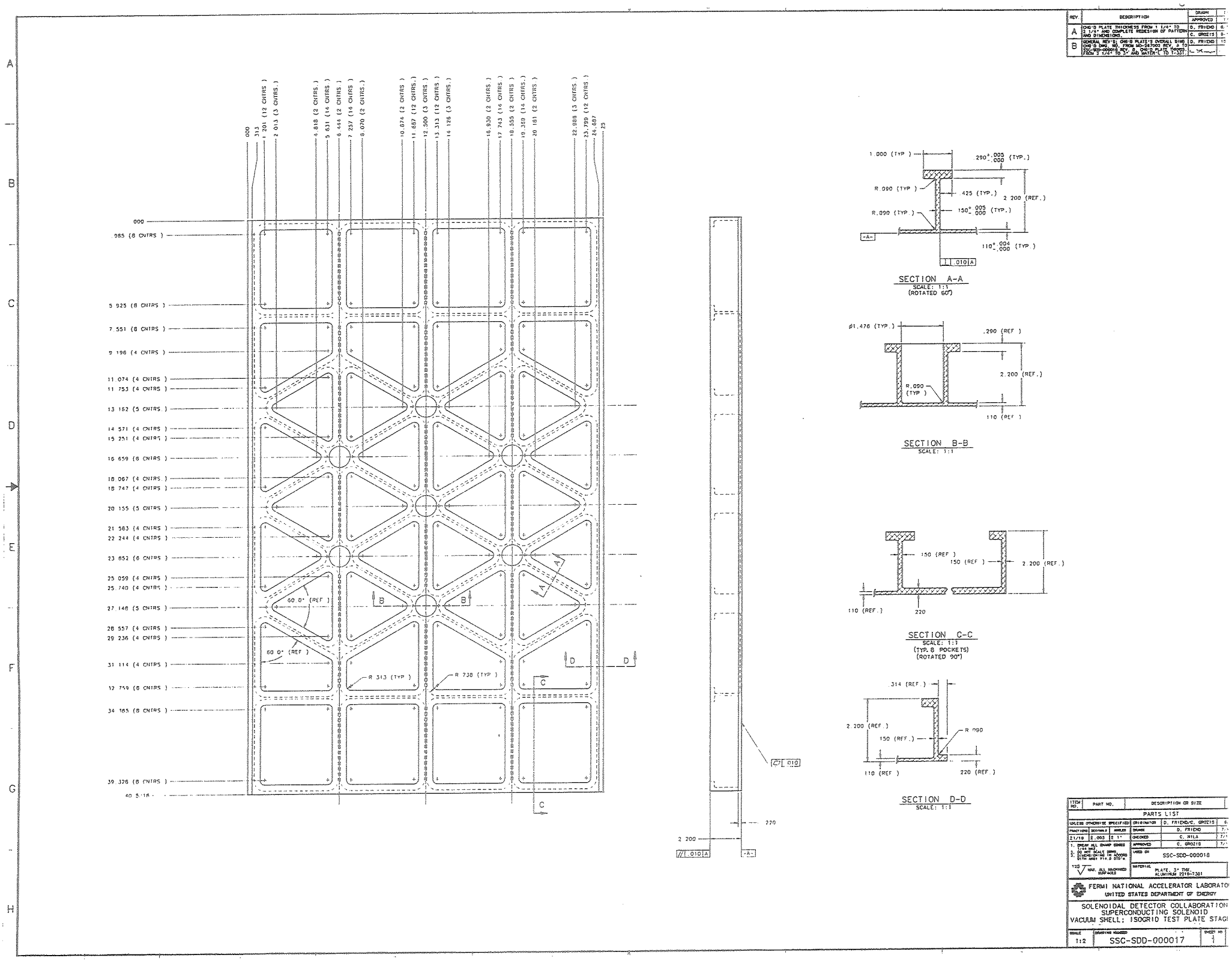

REV.
DESCRIPTION
DRAWN
APPROVED
A
CHG'D PLATE THICKNESS FROM 1 1/4" TO 2 1/4" AND COMPLETE REDESIGN OF PATTERN AND DIMENSIONS.
D. FRIEND
C. GROZIS
B
GENERAL REV'S; CHG'D PLATE'S OVERALL DIMS CHG'D DWG. NO. FROM MD-267002 REV. A TO SSC-SDD-000018 REV. B. CHG'D PLATE THICKNESS FROM 2 1/4" TO 3" AND MATERIAL TO 7-331.
D. FRIEND
.000
.313
1.201 (12 CNTRS.)
2.013 (3 CNTRS.)
4.818 (2 CNTRS.)
5.631 (14 CNTRS.)
6.444 (2 CNTRS.)
7.257 (14 CNTRS.)
8.070 (2 CNTRS.)
10.674 (2 CNTRS.)
11.687 (12 CNTRS.)
12.500 (3 CNTRS.)
13.313 (12 CNTRS.)
14.126 (3 CNTRS.)
16.930 (2 CNTRS.)
17.743 (14 CNTRS.)
18.559 (2 CNTRS.)
19.359 (14 CNTRS.)
20.161 (2 CNTRS.)
22.986 (3 CNTRS.)
23.799 (12 CNTRS.)
24.687
.25
.985 (8 CNTRS.)
5.925 (8 CNTRS.)
7.551 (8 CNTRS.)
9.196 (4 CNTRS.)
11.074 (4 CNTRS.)
11.753 (4 CNTRS.)
13.162 (5 CNTRS.)
14.571 (4 CNTRS.)
15.251 (4 CNTRS.)
16.659 (6 CNTRS.)
18.067 (4 CNTRS.)
18.747 (4 CNTRS.)
20.155 (5 CNTRS.)
21.563 (4 CNTRS.)
22.244 (4 CNTRS.)
23.652 (6 CNTRS.)
25.059 (4 CNTRS.)
25.740 (4 CNTRS.)
27.148 (5 CNTRS.)
28.557 (4 CNTRS.)
29.236 (4 CNTRS.)
31.114 (4 CNTRS.)
32.759 (6 CNTRS.)
34.165 (8 CNTRS.)
39.326 (8 CNTRS.)
40.5-16
60.0° (REF.)
60.0° (REF.)
R.313 (TYP.)
R.738 (TYP.)
B
B
A
A
C
C
D
D
1.000 (TYP.)
.290 +.005 -.000 (TYP.)
R.090 (TYP.)
.425 (TYP.)
2.200 (REF.)
R.090 (TYP.)
.150 +.005 -.000 (TYP.)
-A-
.110 +.004 -.000 (TYP.)
.010 A
SECTION A-A
SCALE: 1:1
(ROTATED 60°)
ø1.476 (TYP.)
.290 (REF.)
2.200 (REF.)
R.090 (TYP.)
.110 (REF.)
SECTION B-B
SCALE: 1:1
.150 (REF.)
.150 (REF.)
2.200 (REF.)
.110 (REF.)
.220
SECTION C-C
SCALE: 1:1
(TYP. 8 POCKETS)
(ROTATED 90°)
.314 (REF.)
2.200 (REF.)
.150 (REF.)
R.090
.110 (REF.)
.220 (REF.)
SECTION D-D
SCALE: 1:1
.010
.220
2.200
.010 A
-A-
ITEM NO.
PART NO.
DESCRIPTION OR SIZE
PARTS LIST
UNLESS OTHERWISE SPECIFIED
FRACTIONS
DECIMALS
ANGLES
21/10
2.003
± 1°
1. BREAK ALL SHARP EDGES 1/64 MAX.
2. DO NOT SCALE DWG. DIMENSIONING IN ACCORD WITH ANSI Y14.5 STD'S.
125 MAX. ALL MACHINED SURFACES
ORIGINATOR
D. FRIEND/C. GROZIS
DRAWN
D. FRIEND
CHECKED
C. NILA
APPROVED
C. GROZIS
USED ON
SSC-SDD-000018
MATERIAL
PLATE, 3" THK. ALUMINUM 2219-T351
FERMI NATIONAL ACCELERATOR LABORATO
UNITED STATES DEPARTMENT OF ENERGY
SOLENOIDAL DETECTOR COLLABORATION
SUPERCONDUCTING SOLENOID
VACUUM SHELL; ISOGRID TEST PLATE STAG
SCALE
1:2
DRAWING NUMBER
SSC-SDD-000017
SHEET NO.
1

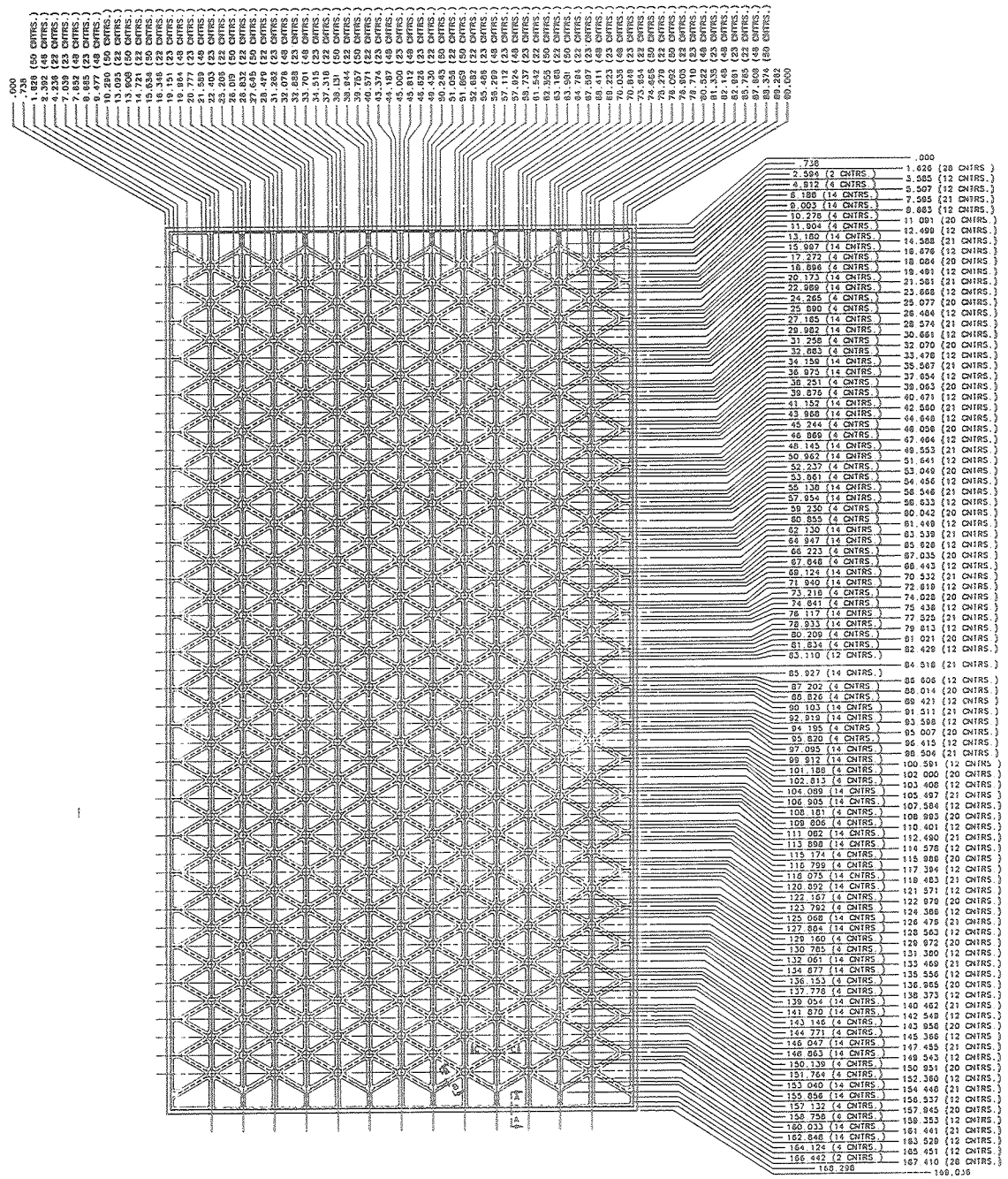

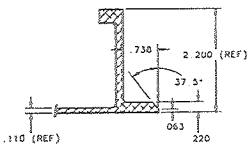

SECTION A-A
SCALE: 1:1

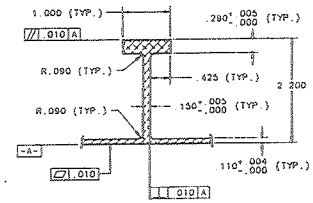

SECTION B-B
SCALE: 1:1

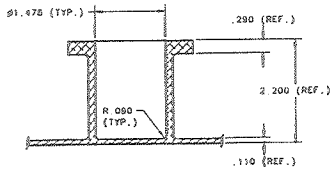

SECTION C-C
SCALE: 1:1

ITEM NO.	PART NO.	DESCRIPTION OR SIZE	QTY REQ

PARTS LIST

UNLESS OTHERWISE SPECIFIED			ORIGINATOR	
FRACTIONS	DECIMALS	ANGLES	DRAWN	
2	2	2	CHECKED	
1. BREAK ALL SHARP EDGES 1/64 MAX			APPROVED	
2. DO NOT SCALE DRWG.			USED ON	
3. DIMENSIONING IN INCHES DIM AND TOLS DIM'S			MATERIAL	E
√ DIM. ALL MACHINED SURFACES				

FERMI NATIONAL ACCELERATOR LABORATORY
UNITED STATES DEPARTMENT OF ENERGY

SCALE | DRAWING NUMBER | SHEET NO. 1 | REV

1.5.5 Comparison of HC & IG shell (Lee)

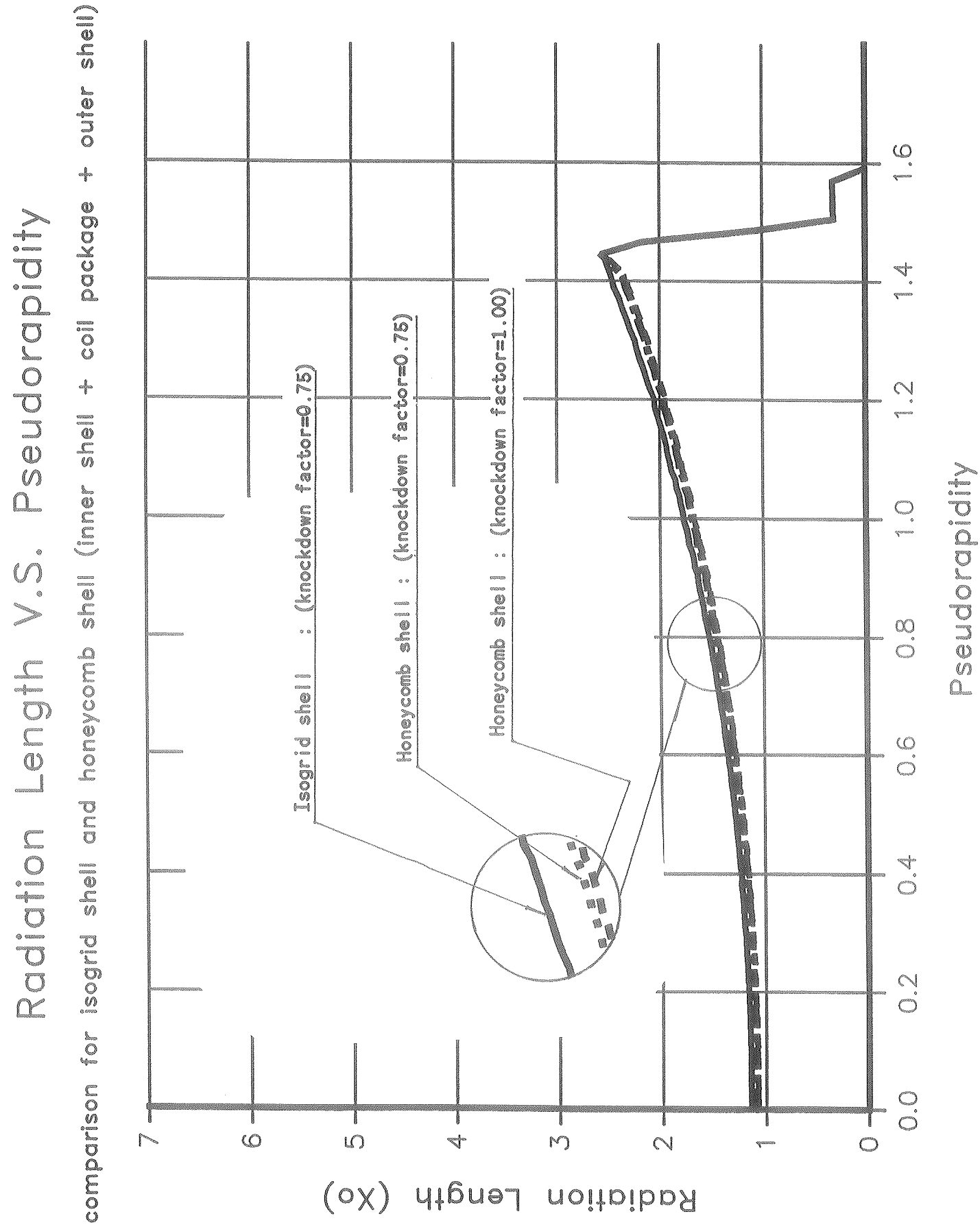

1.5.10 Attachment to calorimeter (Krebs)

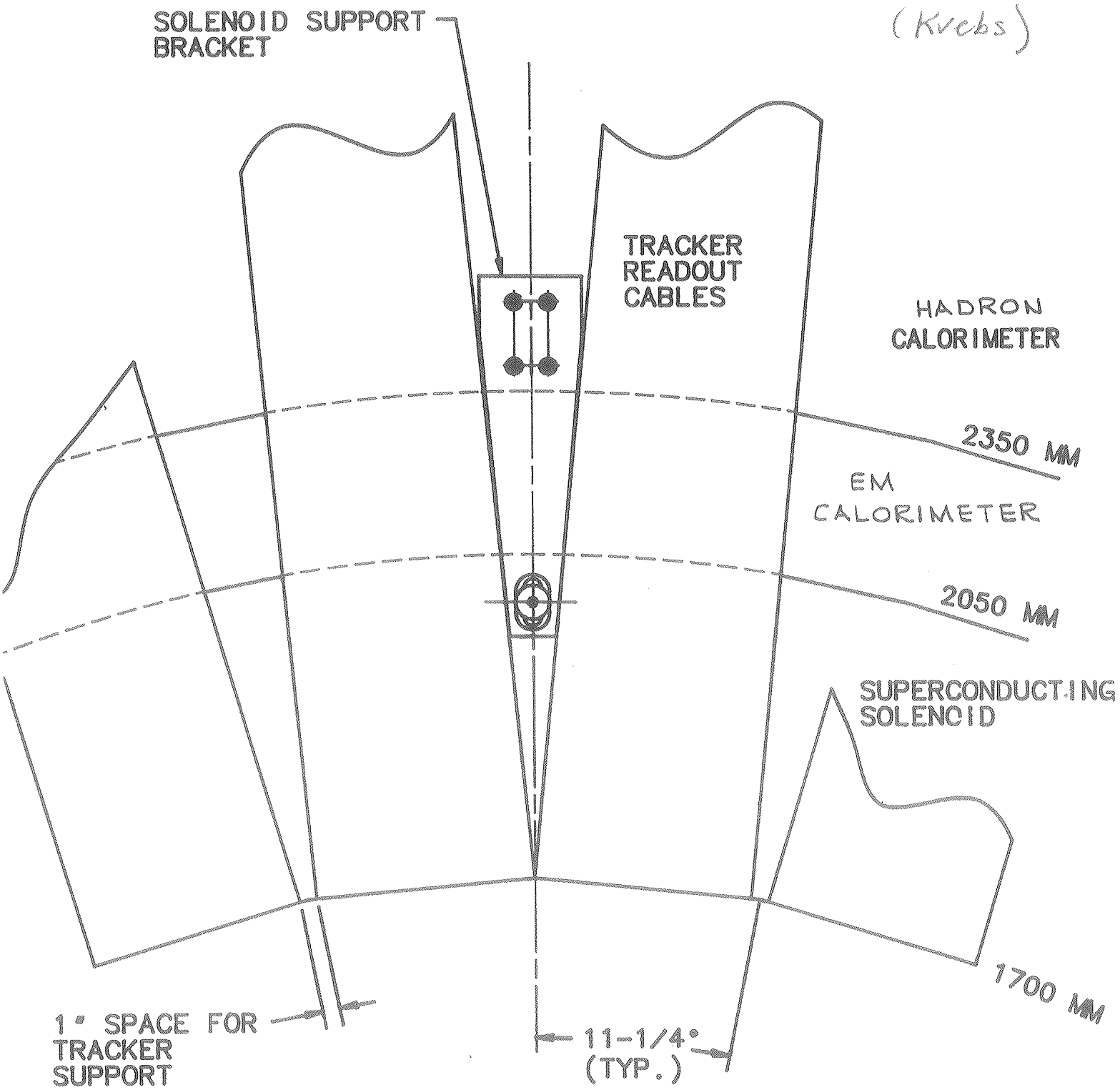

TRACKER VOLUME

SDC CRYOGENIC SYSTEM

COMPARISON OF LOCATIONS FOR THE INSTRUMENTATION & HIGH VOLTAGE CONNECTORS

CONTROL DEWAR

BETWEEN THE CALORIMETER AND MUON IRON

WITHIN THE HADRON CALORIMETER

ON THE OUTER VACUUM SHELL

1.6.2 - Location of connector box (Stefanik)

SDC CRYOGENIC SYSTEM

COMPARISON OF LOCATIONS FOR THE INSTRUMENTATION & HIGH VOLTAGE CONNECTORS

ISSUES

ACCESSIBILITY FOR REPAIR

WORK SPACE

WIRING INSIDE THE CHIMNEY

FIELD JOINT

SHIPPING

HERMETICITY

COMPARISION OF LOCATIONS FOR THE SOLENOID'S ELECTRICAL CONNECTORS

IMPORTANCE FACTOR (I-F) SCALE: 1 - Very / 0.5- Average / 0 - Not
RATING SCALE: 10 - Excellent / 5 - Acceptable / 0 - Not acceptable

CONNECTORS LOCATED AT THE CONTROL DEWAR

ISSUE	Comment	I-F	Rating
	READILY ACCESSIBLE means that an open work space can be maintained around the connectors and that no equipment or cabling must be removed to work on the connectors.		
Access	The connectors will be readily accessible.	1	10
Work space	Sufficient work space.	1	10
Length of wiring inside the chimney.	The wiring runs the entire length of the chimney. Extension wiring is needed. The joints are made inside a j-box located either in the space between the calorimeter and muon iron or in the chimney tower. The solenoid must be supplied with instrumentation and high voltage leads that are long enough to reach the intermediate junction box. The wiring reduces the chimney's flow conductance. Chimney fabrication is more complicated.	1	5
Field joint	Adds a significant amount of work to assembling the field joint: the instrumentation and high voltage wiring must be spliced and checked out.	1	3
Shipping	Short to medium chimney length.	0.4	10
Calorimeter hermeticity	Excellent.	1	10
Rating for this location			42

FNAL - A. Stefanik - Nov. 8, 1991

COMPARISION OF LOCATIONS FOR THE SOLENOID'S ELECTRICAL CONNECTORS

IMPORTANCE FACTOR (I-F) SCALE: 1 - Very / 0.5- Average / 0 - Not
RATING SCALE: 10 - Excellent / 5 - Acceptable / 0 - Not acceptable

CONNECTORS LOCATED BETWEEN THE CALORIMETER AND THE MUON IRON

ISSUE	Comment	I-F	Rating
	READILY ACCESSIBLE means that an open work space can be maintained around the connectors and that no equipment or cabling must be removed to work on the connectors.		
Access	There is a high probability that the connectors will either be readily accessible or accessible with a reasonable amount of work. The VLPCs and cabling are located in this same area and access could be severly limited without good planing.	1	8
Work space	Working in this area will not be as convenient as working on the outside of the detector.	1	8
Length of wiring inside the chimney.	The wiring runs for a length 2 meters inside the chimney. Extension wiring is not needed. This requires that the solenoid be supplied with instrumentation and high voltage leads that are about 3 meters long. The wiring reduces the chimney's flow conductance slightly.	1	8
Field joint	Adds a significant amount of work to assembling the field joint: the instrumentation and high voltage wiring must be spliced and checked out.	1	3
Shipping	Short chimney length.	0.4	10
Calorimeter hermeticity	Excellent.	1	10
Rating for this location			41

FNAL - A. Stefanik - Nov. 8, 1991

COMPARISION OF LOCATIONS FOR THE SOLENOID'S ELECTRICAL CONNECTORS

IMPORTANCE FACTOR (I-F) SCALE: 1 - Very / 0.5- Average / 0 - Not
RATING SCALE: 10 - Excellent / 5 - Acceptable / 0 - Not acceptable

CONNECTORS LOCATED WITHIN THE HADRON CALORIMETER

ISSUE	Comment	I-F	Rating
	READILY ACCESSIBLE means that an open work space can be maintained around the connectors and that no equipment or cabling must be removed to work on the connectors.		
Access	There is a high probability that the connectors will be readily accessible. The connectors are located within the chimney tower. Cabling from the central tracker must either be routed around this location or be removable to provide access.	1	8
Work space	The work space and elevation will be good for a vertical connector box but may be awkward for a horizontal connector box.	1	9
Length of wiring inside the chimney.	The wiring runs for a length 1 meter inside the chimney. Extension wiring is not needed. The solenoid can be supplied with minimum length instrumentation and high voltage leads. There is minimal reduction in the chimney's flow conductance.	1	10
Field joint	The connectors are wired at the fabricator's shop; no field splicing required. The field joint for the superconducting leads and cryogenic lines can be at the same elevation as a vertical connector box.	1	10
Shipping	Long chimney length with horizontal connector box. Medium chimney length with vertical connector box.	0.4	8
Calorimeter hermeticity	Very good.	1	8
Rating for this location			48.2

FNAL - A. Stefanik - Nov. 8, 1991

COMPARISION OF LOCATIONS FOR THE SOLENOID'S ELECTRICAL CONNECTORS

IMPORTANCE FACTOR (I-F) SCALE: 1 - Very / 0.5- Average / 0 - Not
RATING SCALE: 10 - Excellent / 5 - Acceptable / 0 - Not acceptable

CONNECTORS LOCATED ON THE OUTER VACUUM SHELL

ISSUE	Comment	I-F	Rating
	READILY ACCESSIBLE means that an open work space can be maintained around the connectors and that no equipment or cabling must be removed to work on the connectors.		
Access	There is a high probability that the connectors will be readily accessible. Cabling from the central tracker must either be routed around the location of each connector or be removable to provide access to each connector.	1	8
Work space	The connectors must be pointed toward the end plug to avoid the cramped work space between the outer vacuum shell and the calorimeter.	1	9
Length of wiring inside the chimney.	There is no instrumentation or high voltage wiring in the chimney.	1	10
Field joint	The connectors are wired at the fabricator's shop; no field splicing required.	1	10
Shipping	Short chimney length.	0.4	10
Calorimeter hermeticity	Average.	1	5
Rating for this location			46

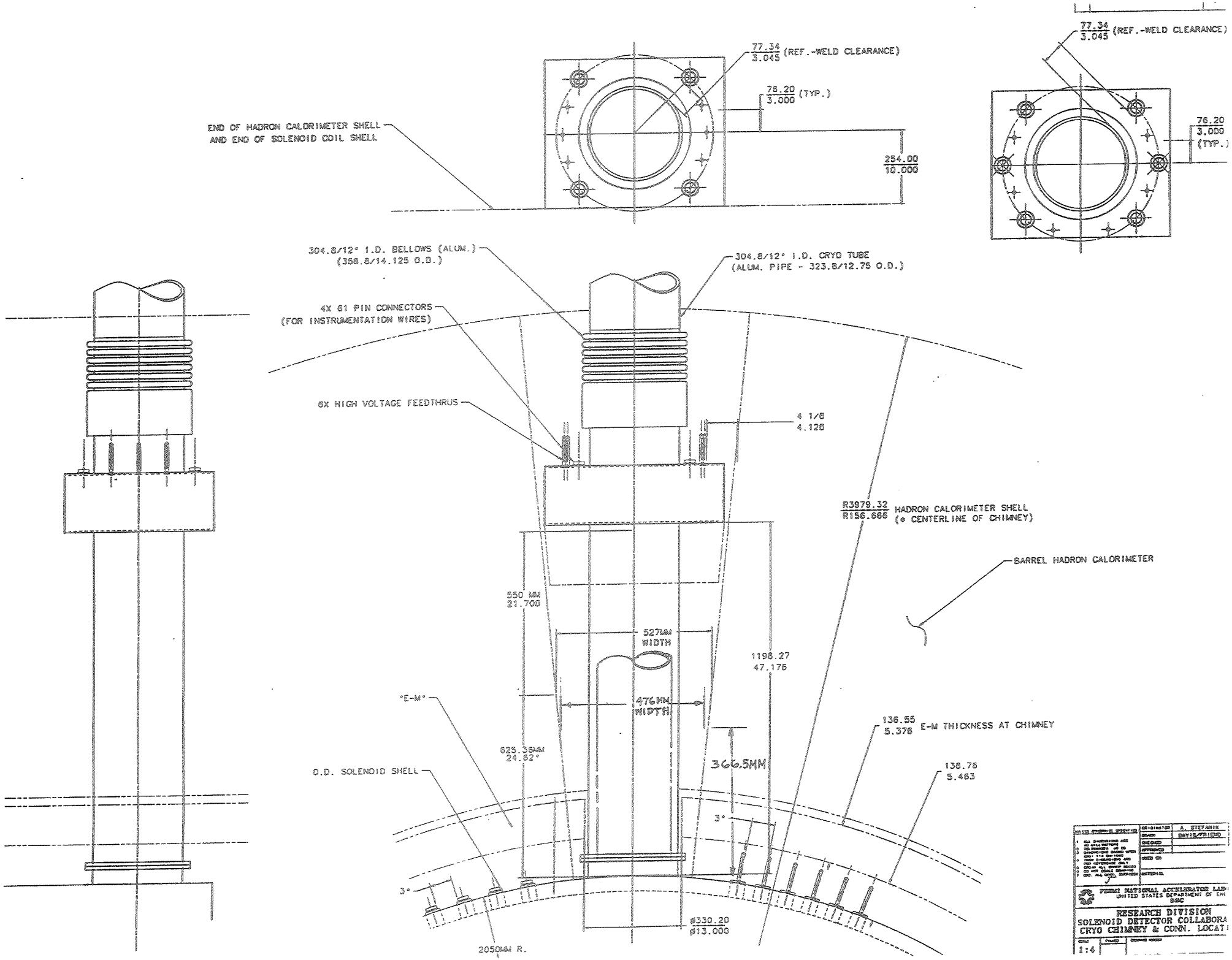
77.34
3.045
(REF.-WELD CLEARANCE)
76.20
3.000
(TYP.)
END OF HADRON CALORIMETER SHELL
AND END OF SOLENOID COIL SHELL
254.00
10.000
304.8/12° I.D. BELLOWS (ALUM.)
(358.8/14.125 O.D.)
304.8/12° I.D. CRYO TUBE
(ALUM. PIPE - 323.8/12.75 O.D.)
4X 61 PIN CONNECTORS
(FOR INSTRUMENTATION WIRES)
6X HIGH VOLTAGE FEEDTHRUS
4 1/8
4.128
R3979.32
R156.666
HADRON CALORIMETER SHELL
(⊥ CENTERLINE OF CHIMNEY)
BARREL HADRON CALORIMETER
550 MM
21.700
527MM
WIDTH
1198.27
47.176
476MM
WIDTH
"E-M"
625.36MM
24.62°
366.5MM
136.55
5.376
E-M THICKNESS AT CHIMNEY
138.76
5.463
O.D. SOLENOID SHELL
3°
3°
ø330.20
ø13.000
2050MM R.
FERMI NATIONAL ACCELERATOR LAB
UNITED STATES DEPARTMENT OF EN
SSC
RESEARCH DIVISION
SOLENOID DETECTOR COLLABORA
CRYO CHIMNEY & CONN. LOCAT
1:4

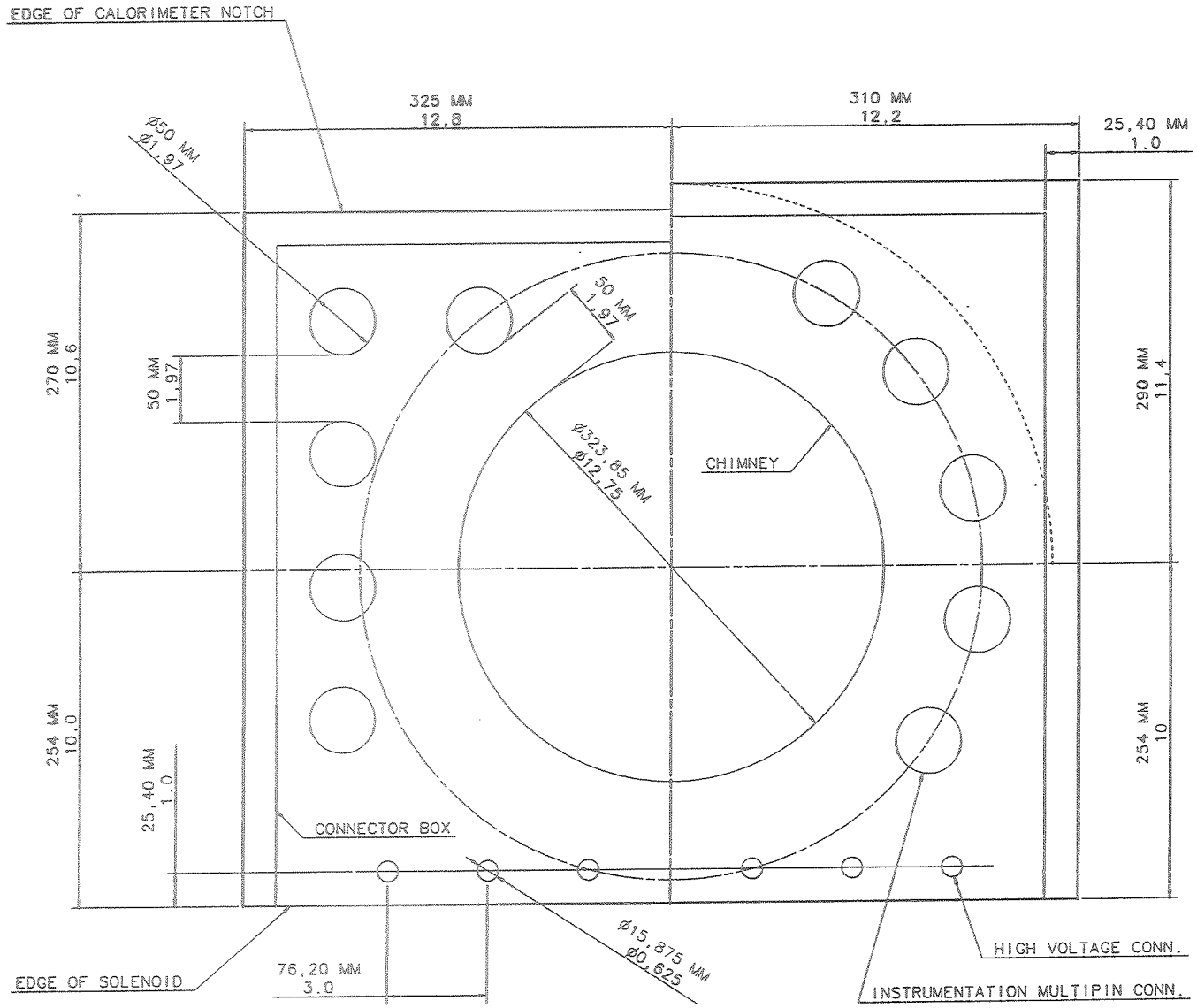

ITEM NO.	PART NO.	DESCRIPTION OR SIZE	QTY. REQ.

PARTS LIST

UNLESS OTHERWISE SPECIFIED		ORIGINATOR	ANDY STEFANIK	5 NOV 91
FRACTIONS	DECIMALS	ANGLES	DRAWN	VIC MAJDANSKI	5 NOV 91
±	±	±	CHECKED		
1. BREAK ALL SHARP EDGES 1/64 MAX. 2. DO NOT SCALE DWG. 3. DIMENSIONS IN ARCHED WITH ANSI Y14.5 STD'S.			APPROVED		
			USED ON		
MAX. ALL MACHINED SURFACES			MATERIAL		D

FERMI NATIONAL ACCELERATOR LABORATORY
UNITED STATES DEPARTMENT OF ENERGY

R/D CRYO DEPT.
SDC SOLENOID
CHIMNEY CONNECTOR BOX

SCALE	DRAWING NUMBER	SHEET NO.	REV.
3/8"=1"		1	

ITEM NO.	PART NO.	DESCRIPTION OR SIZE	QTY. REQ.

PARTS LIST

UNLESS OTHERWISE SPECIFIED	ORIGINATOR	ANDY STEFANIK	5 NOV 91
FRACTIONS ± / DECIMALS ± / ANGLES ±	DRAWN	VIC MAJDANSKI	5 NOV 91
	CHECKED		
1. BREAK ALL SHARP EDGES 1/64 MAX. 2. DO NOT SCALE DWG. 3. DIMENSIONING IN ACCORD WITH ANSI Y14.5 STD'S.	APPROVED		
	USED ON		
MAX. ALL MACHINED SURFACES	MATERIAL		D

FERMI NATIONAL ACCELERATOR LABORATORY
UNITED STATES DEPARTMENT OF ENERGY

R/D CRYO DEPT.
SDC SOLENOID
CHIMNEY CONNECTOR BOX

SCALE	DRAWING NUMBER	SHEET NO.	REV.
3/8"=1"		1	

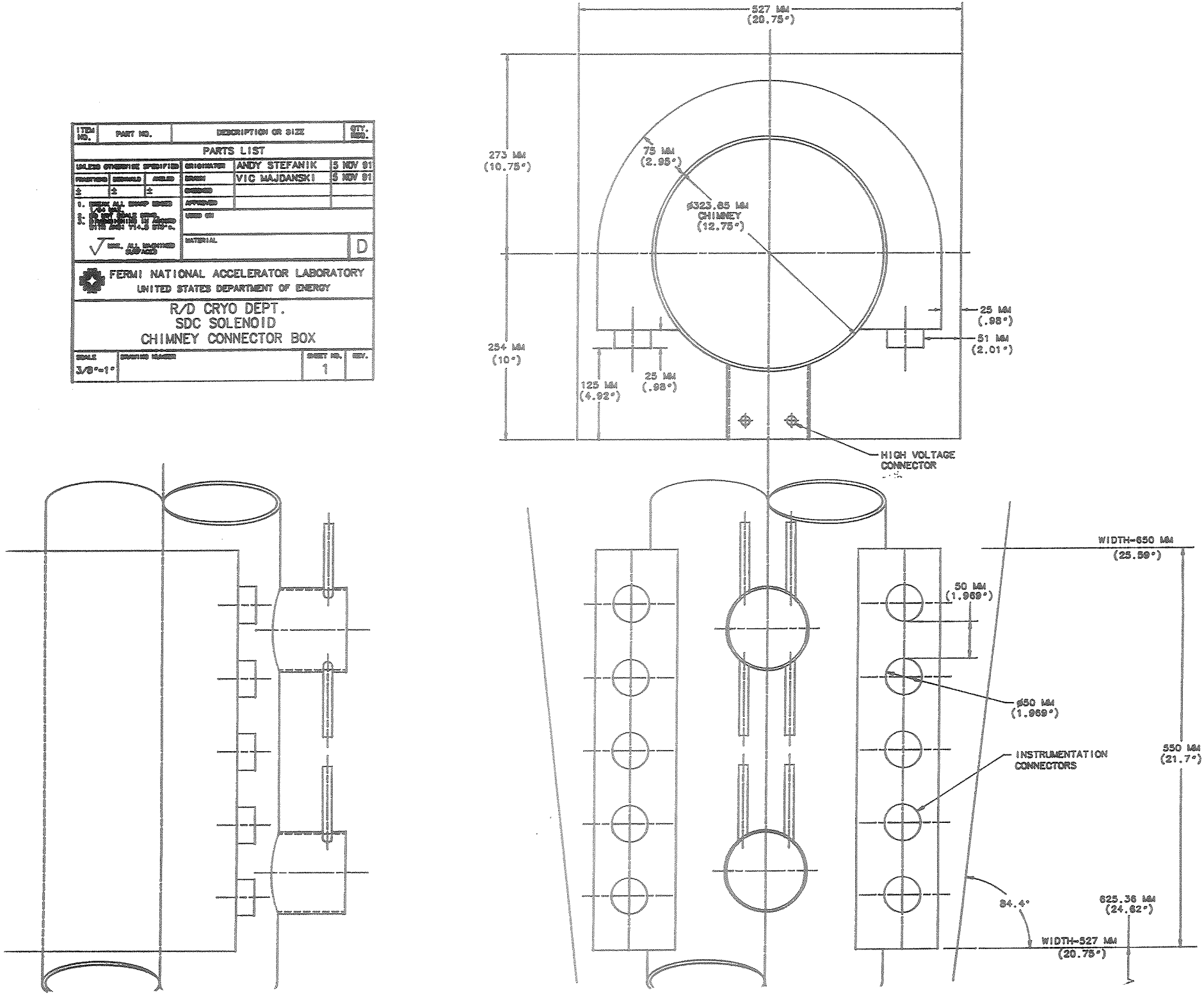

ITEM NO.	PART NO.	DESCRIPTION OR SIZE	QTY. REQ.

PARTS LIST

UNLESS OTHERWISE SPECIFIED					
FRACTIONS	DECIMALS	ANGLES	ENGINEER	ANDY STEFANIK	5 NOV 91
±	±	±	DRAWN	VIC MAJDANSKI	5 NOV 91
			CHECKED		
			APPROVED		
			USED ON		
			MATERIAL		D

FERMI NATIONAL ACCELERATOR LABORATORY
UNITED STATES DEPARTMENT OF ENERGY

R/D CRYO DEPT.
SDC SOLENOID
CHIMNEY CONNECTOR BOX

SCALE	DRAWING NUMBER	SHEET NO.	REV.
3/8"=1"		1	

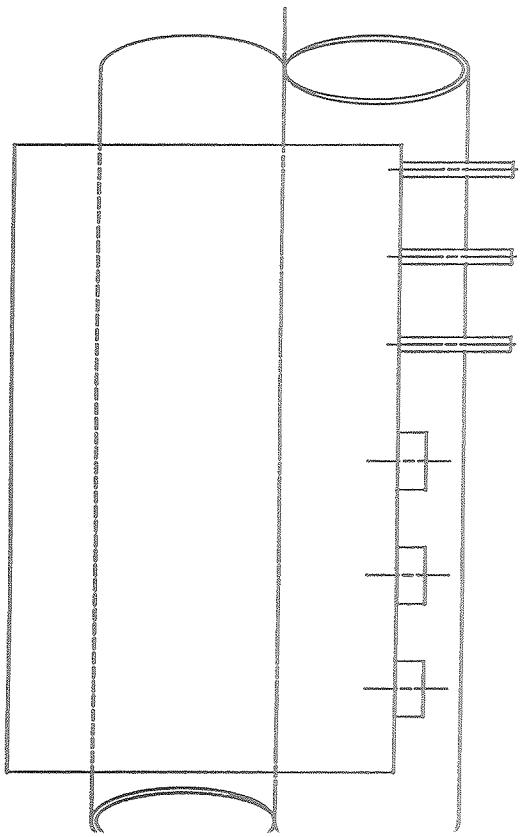

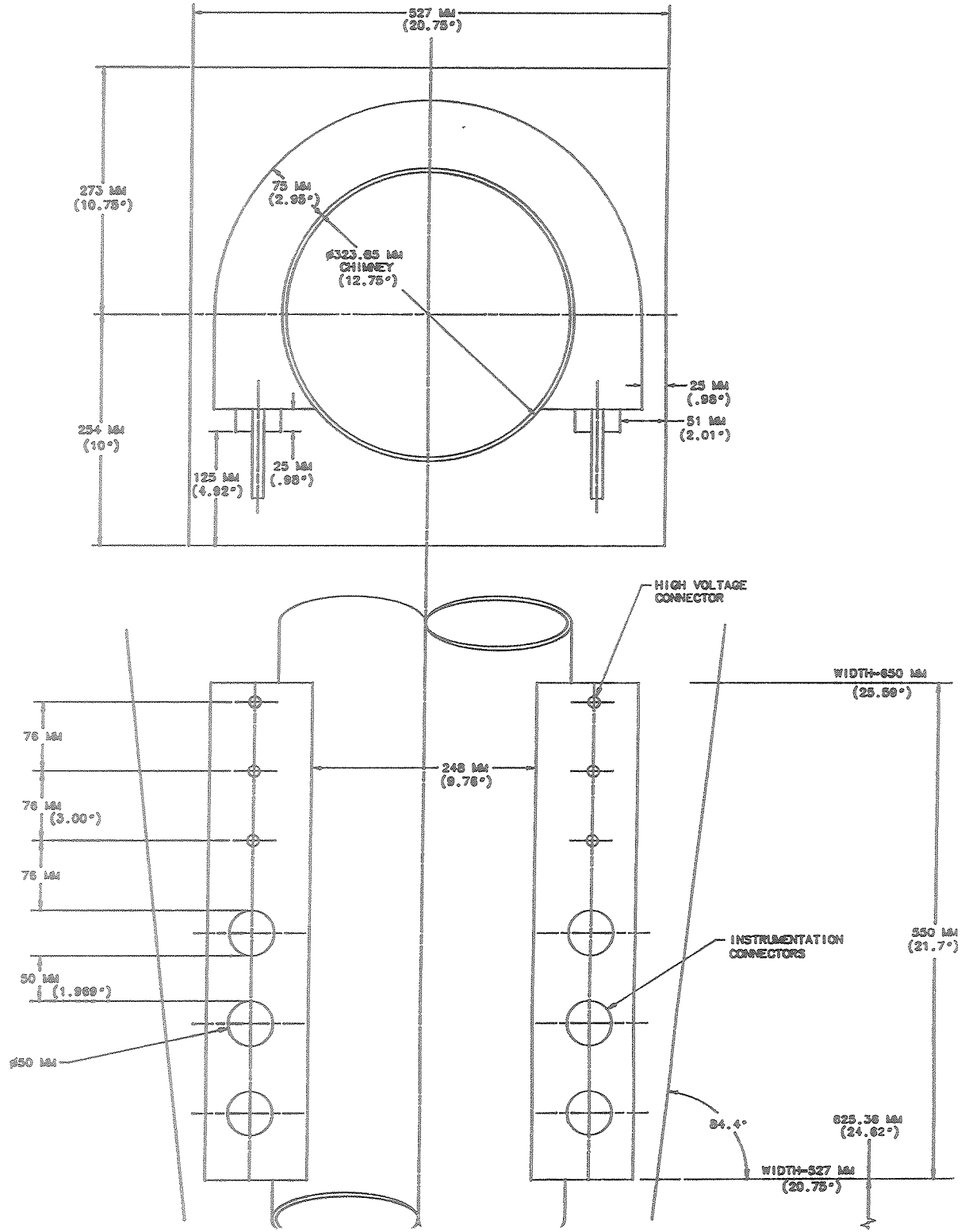

1.6.4 Size of Chimney	SECTION 5.4	PROJECT SDC	SERIAL-CATEGORY DN 116	PAGE 14

SUBJECT: ESTIMATE THE ADDITIONAL ΔP CAUSED BY REDUCING THE CHIMNEY AT THE CRYOSTAT

NAME: AM Stefanik

DATE: 11/4/91

REVISION DATE:

THE REDUCED DIAMETER AND SUDDEN EXPANSION CAUSE ADDITIONAL PRESSURE DROP. DO NOT CALCULATE THE PRESSURE DROP FOR THE SUDDEN EXPANSION UNTIL A DECISION IS MADE ON SIZE OF THE REDUCED SECTION AND TRANSITION TYPE.

SKETCH

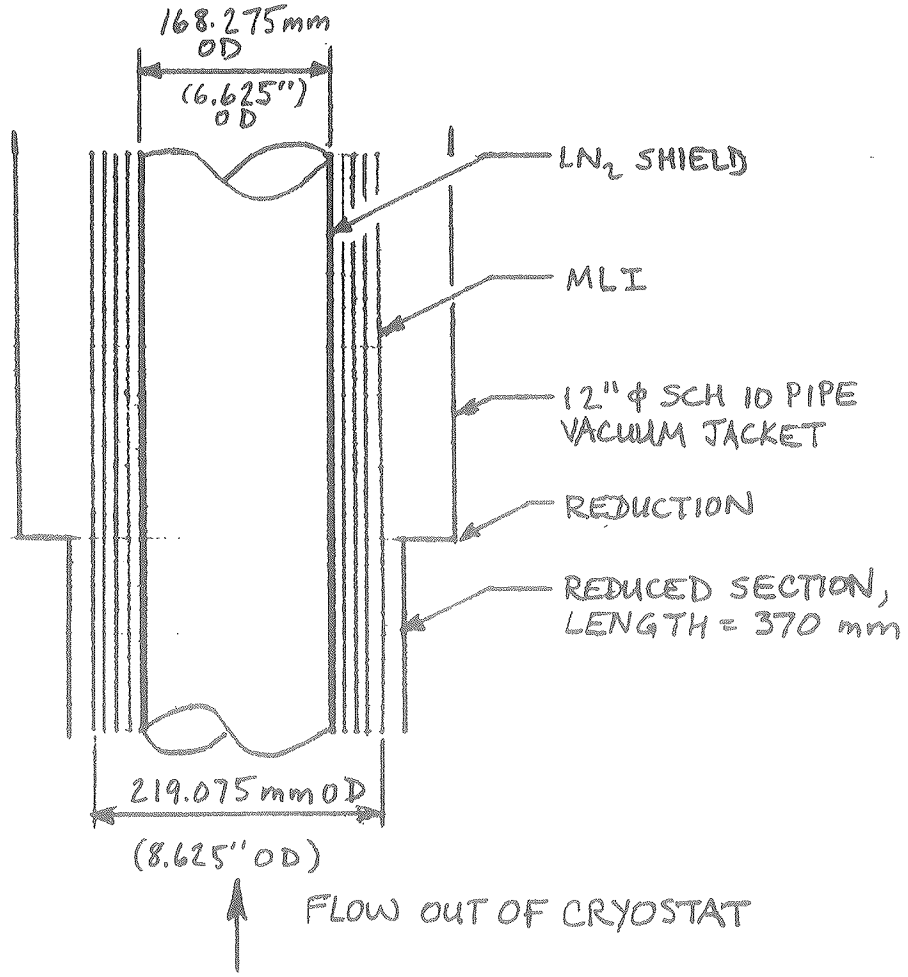

CONSIDER THESE CASES:

CASE 1 - NO INSTRUMENTATION WIRING IN THE REDUCED AREA. 10" SCH 10 VJ

CASE 2 - INSTRUMENTATION WIRING IN THE REDUCED AREA. 12" AND 10" SCH 10 VJ

CASE 3 - KEK PLAN, WITH AND WITHOUT INSTRUMENTATION WIRING IN THE REDUCED AREA. THIS PLAN IS SHOWN ON PAGE 21.

546707

FERMILAB ENGINEERING NOTE	SECTION 5.4	PROJECT SDC	SERIAL-CATEGORY DN 116	PAGE 20

SUBJECT: SUMMARY OF ADDITIONAL ΔP CAUSED BY REDUCING THE CHIMNEY AT THE CRYOSTAT

NAME: AMS

DATE: 11/5/91

REVISION DATE:

FLOW RATE = 120 g/s OF HELIUM AT 300K

INSIDE DIAMETER OF CHIMNEY VJ = 12.39" (12" ϕ SCH 10 PIPE)

OUTSIDE DIAMETER OF LN_2 SHIELD INSULATION = 8.625" (1" MLI THK)

LENGTH OF REDUCED SECTION ≐ 370 mm ≐ 14.5"

MAXIMUM ALLOWABLE RELIEVING PRESSURE FOR 1/4" IVS = 0.675 psi (DN #113)

CASE Nº	NOMINAL PIPE SIZE OF REDUCED SECTION (in)	INSTR. WIRING INCLUDED? (YES/NO)	VELOCITY IN REDUCED SECTION (ft/sec)	TOTAL ΔP (psi)	INCREASE ABOVE 0.0952 psi ΔP W/O REDUCTION (%)
1	10	NO	142	0.1152	21
2	12	YES	66	0.1033	8.5
2	10	YES	172	0.1332	40
3	~8	NO	327	0.2602	173
3	~8	YES	552	0.8452	788

546707

SS.4 DN 116
SDC
AMS
11/5/91

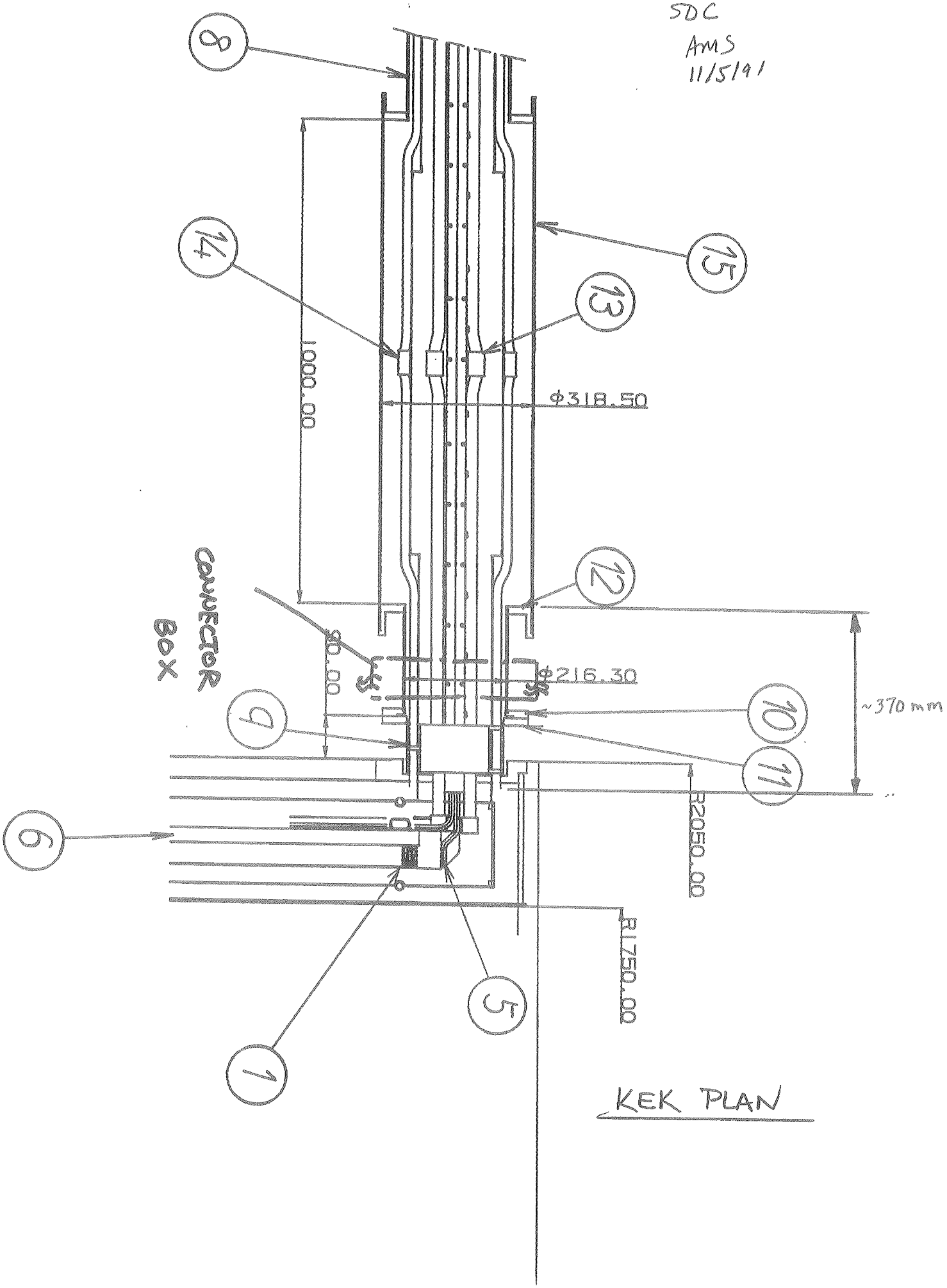

KEK PLAN

SUBJECT: ESTIMATE THE PRESSURE DROP FOR A CHIMNEY WITH THE DIMENSIONS IN CASE 3 (KEK PLAN)

NAME: AMS

DATE: 11/6/91

REVISION DATE:

ASSUME NO INSTRUMENTATION WIRING INSIDE THE CHIMNEY.

34 ft OF ANNULAR FLOW AREA WITH ENTRANCE LOSS -

REFER BACK TO PAGE 18 TO OBTAIN PERTINENT VALUES.

$$\Sigma K = 1 + \frac{0.031\,(34\,\cancel{ft})}{(0.92/12)\,\cancel{ft}} = 14.75$$

$$\Delta P = \frac{K v^2 \gamma}{2g\ 144} = 14.75\,(327)^2\,\frac{\cancel{ft^2}}{\cancel{s^2}} * 0.01\,\frac{Lbf}{\cancel{ft^3}} * \frac{1}{2} * \frac{\cancel{s^2}}{32.2\,\cancel{ft}} * \frac{\cancel{ft^2}}{144\,in^2}$$

$$= 1.7\ psi > 0.675\ psi$$

534393

SUBJECT: ESTIMATE THE PRESSURE DROP FOR A CHIMNEY WITH THE DIMENSIONS IN CASE 1 (10" SCH 10 VJ)

NAME: AMS

DATE: 11/6/91

REVISION DATE:

NO INSTRUMENTATION WIRING IN CHIMNEY.

RECALCULATE THE MAJOR PRESSURE DROPS.

- 34 ft OF ANNULAR FLOW AREA WITH ENTRANCE LOSS -

REFER BACK TO PAGE 15 FOR PERTINENT VALUES.

$$\Sigma K = 1 + \frac{0.031\,(34\,ft)}{(1.8''/12)\,ft} = 8.03$$

$$\Delta P = \frac{8.03\,(141.6)^2\,(0.01)}{2(32.2)(144)} = 0.17\ psi$$

- LN_2 SHIELD SPACERS -

REFER BACK TO PAGE 7.

$$\Delta P = \left(\frac{W}{1700\,Y A_1 C}\right)^2 \frac{1}{\rho}$$

DETERMINE C

$A_2 \equiv$ ANNULAR FLOW AREA $= 26.88\ in^2$

$A_1 \equiv$ REDUCED FLOW AREA AT SPACERS $= 26.88 - 4\left[\left(\frac{10.42'' - 8.625''}{2}\right) \times 1''\right]$

$= 23.29\ in^2$

$$\left.\begin{aligned} \beta &= \sqrt{\frac{A_1}{A_2}} = \sqrt{\frac{23.29}{26.88}} = 0.931 \\ Re_{D_H} &= 1.6 \times 10^4 \end{aligned}\right\} \Rightarrow C \doteq 0.95$$

$Y \doteq 1$

SOLVE FOR THE PRESSURE DROP AT ALL FOUR LOCATIONS -

$$\Delta P = 4\left[\frac{953}{(1,700)(1)(23.29)(0.95)}\right]^2 \frac{1}{0.01} = 0.26\ psi$$

534393

SUBJECT

NAME AMS

DATE 11/6/91 | REVISION DATE

- LOSS DUE TO PARALLEL PLATE RELIEF VENT -

ASSUME 12"ϕ, SAME AS FOR 12" ϕ CHIMNEY.

$\Delta P = 0.0013$

- TOTAL $\Delta P = 0.17 + 0.26 + 0.0013 \doteq \underline{0.43 \text{ psi}} < 0.675 \text{ psi}$

CONCLUSION: IT MAY BE POSSIBLE FOR THE CHIMNEY TO HAVE A 10" VJ. IT SHOULD REMAIN AT 12"ϕ FOR NOW. THE RELIEVING FLOW RATE AND CHIMNEY DETAILS MUST BE FINALIZED BEFORE DOING CALCULATIONS TO JUSTIFY USING THE 10"ϕ VJ.

THE CHIMNEY CAN BE REDUCED TO 10"ϕ AT THE CRYOSTAT, AS SHOWN ON PAGE 20.

FERMILAB ENGINEERING NOTE	SECTION 6.4	PROJECT SDC	SERIAL-CATEGORY DN 117	PAGE 18

SUBJECT: ESTIMATE THE CONDUCTANCE OF A REDUCED SECTION OF CHIMNEY AT THE CRYOSTAT.

NAME: AMS

DATE: 11/6/91

REVISION DATE:

SKETCH

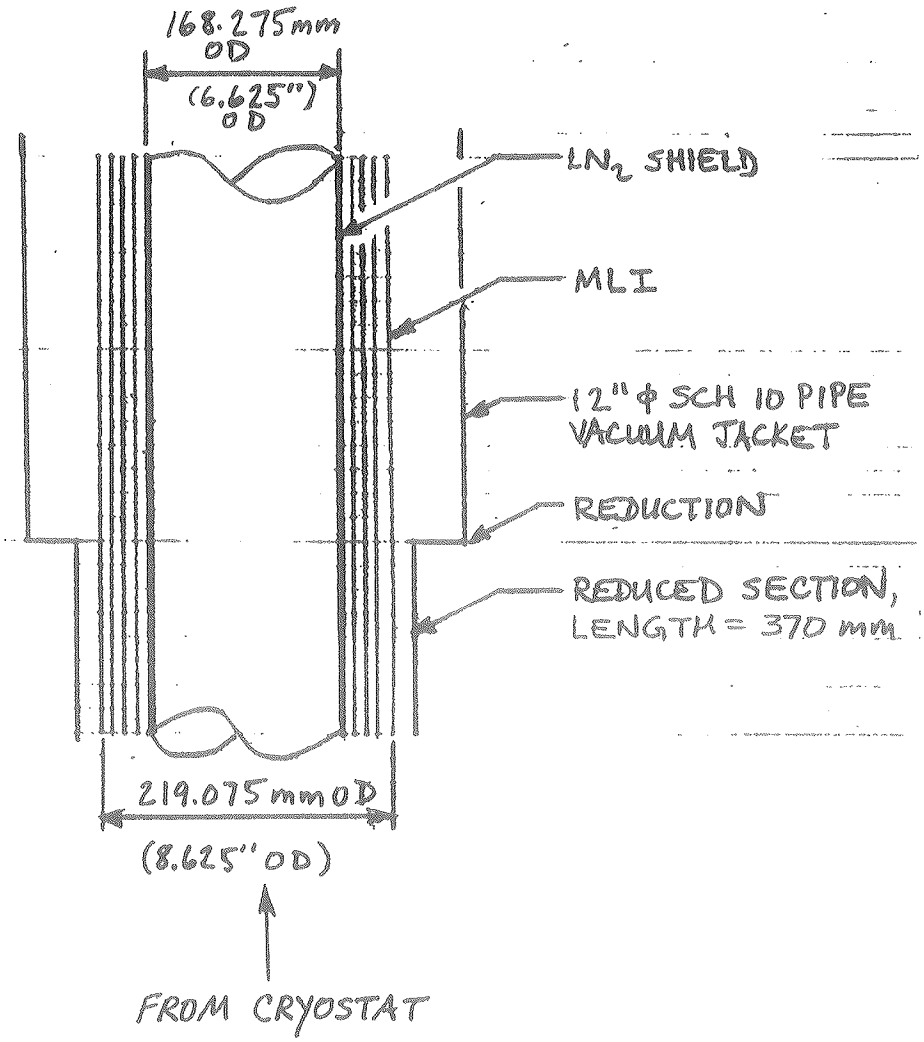

CONSIDER THESE THREE CASES ;

CASE 1 : 10" SCH 10 VJ REDUCED SECTION WITH NO INSTRUMENTATION WIRING IN IT

CASE 2 : KEK PLAN WITHOUT INSTRUMENTATION WIRING IN THE REDUCED SECTION. THIS PLAN IS SHOWN ON PAGE 23.

534393

FERMILAB
ENGINEERING NOTE

SECTION	PROJECT	SERIAL-CATEGORY	PAGE
6.4	SDC	DN 117	22

SUBJECT: SYSTEM CONDUCTANCE VALUES WITH A REDUCED SECTION AT THE CRYOSTAT

NAME:

DATE:

REVISION DATE:

TEMPERATURE = 300 K
LENGTH OF REDUCED SECTION ≐ 370 mm

CASE Nº	NOMINAL PIPE SIZE OF REDUCED SECTION (in)	SYSTEM CONDUC. (ℓ/s)	REDUCTION FROM 12"φ w/o RED. (%)	SYSTEM PUMPING SPEED (ℓ/s)	REDUCTION FROM 12"φ w/o RED.
1	10	126.9	-10	113.8	-8.8
2	~8	93.9	-33	86.5	-30.7

534393

SDC
AMS
11/5/91

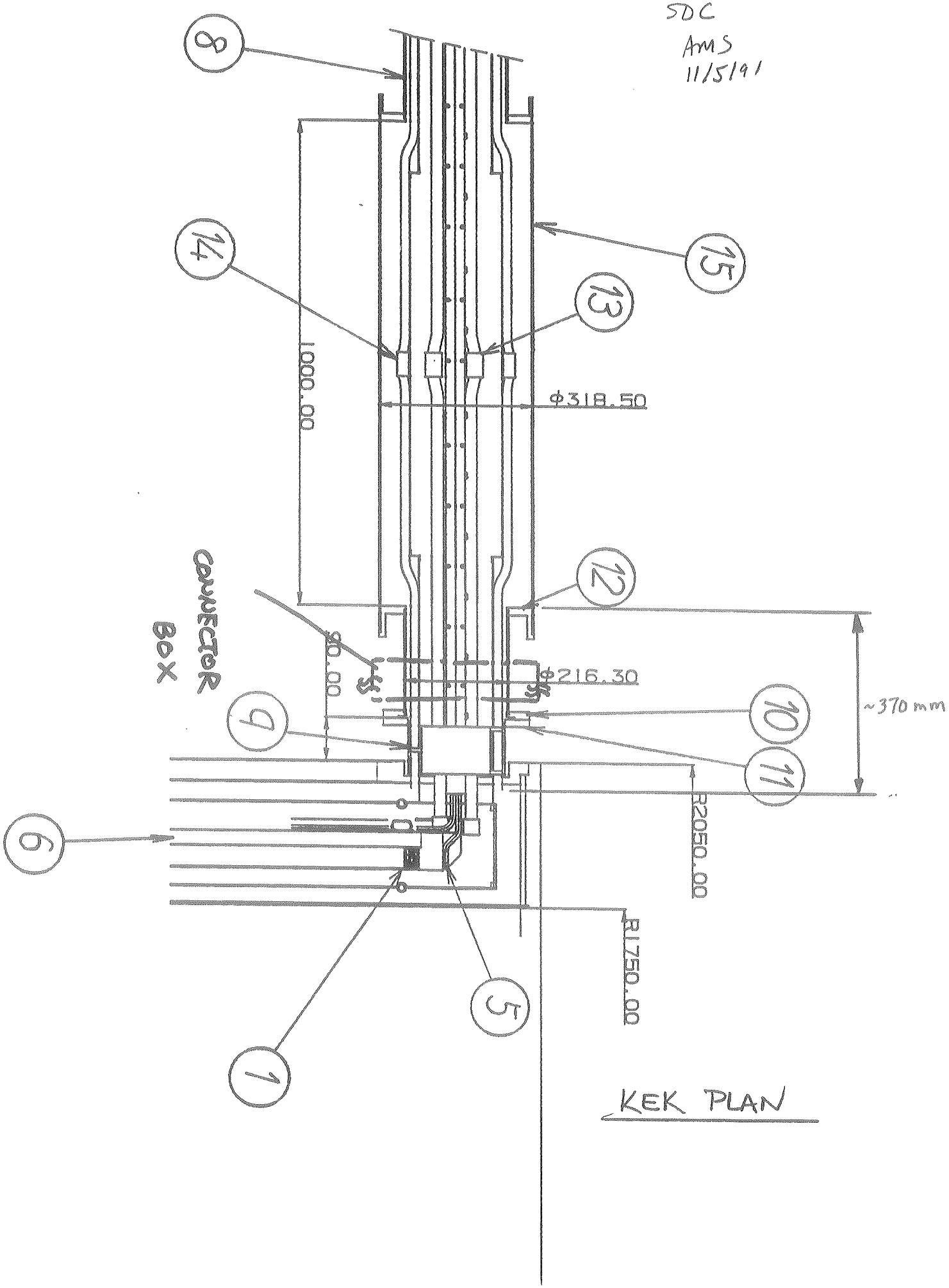

KEK PLAN

SUBJECT: ESTIMATE THE CONDUCTANCE OF A CHIMNEY WITH THE DIMENSIONS IN CASE 2.

NAME: AMS

DATE: 11/6/91

REVISION DATE:

- ENTRANCE TO CHIMNEY (2.1) –

  $C = 2{,}368$ ℓ/s FROM PAGE 20

- 34 ft OF ANNULAR FLOW AREA (2.2)

  $$C = 297 \text{ ℓ/s} \left(\frac{37 \text{ cm}}{1{,}036 \text{ cm}}\right) = 10.6 \text{ ℓ/s}$$

- TEE FOR CHIMNEY BAYONET BOX –

  NONE

- OUTLET TO TURBOMOLECULAR PUMP –

  $C = 4{,}066$ ℓ/s (SAME AS 12" CHIMNEY CALC)

- SPACERS FOR LN_2 SHIELD –

  $$C = 3.64 \left(\frac{T}{M}\right)^{1/2} \frac{A A_0}{A_0 - A} \; [\text{ℓ/s}]$$

  $A_0 \equiv$ FULL FLOW AREA $= 74.9 \text{ cm}^2$ FROM PAGE 20.

  $A \equiv$ RESTRICTED FLOW AREA $= 74.9 - 4\left(2.54 \text{ cm} * \left(\frac{21.63 - 19.3}{2}\right) \text{cm}\right)$

  $= 63 \text{ cm}^2$

  $$C_{\text{PER SPACER}} = 3.64 \left(\frac{300}{4}\right)^{1/2} \frac{63\,(74.9)}{74.9 - 63} = 12{,}500 \text{ ℓ/s}$$

  $$\frac{1}{C_{\text{FOUR SPACERS}}} = \frac{4}{12{,}500} \Rightarrow C_{\text{FOUR SPACERS}} = 3{,}125 \text{ ℓ/s}$$

- ONE LONG RADIUS 90° ELBOW FOR THE TURBOMOLECULAR PUMP –

  $C = 2{,}374$ ℓ/s (SAME AS 12" CHIMNEY CALC)

- HIGH VACUUM GATE VALVE AT PUMP INLET –

  $C = 9{,}154$ ℓ/s (SAME AS 12" CHIMNEY CALC)

THE CONDUCTANCE FOR THIS LINE IS –

$$\frac{1}{C} = \frac{1}{2{,}368} + \frac{1}{10.6} + \frac{1}{4{,}066} + \frac{1}{3{,}125} + \frac{1}{2{,}374} + \frac{1}{9{,}154}$$

$C = 10.4$ ℓ/s FOR HELIUM AT 300K WITH A 6" TURBOMOLECULAR PUMP

$$\% \text{ REDUCTION} = \frac{10.4 - 140.8}{140.8} * 100 = -92.6\%$$

CALCULATE HELIUM PUMPING SPEEDS ...

AT 300 K:

$$\frac{1}{S_S} = \frac{1}{1{,}100} + \frac{1}{10.4} \Rightarrow S_S = 10.3 \text{ ℓ/s}$$

$$\% \text{ REDUCTION} = \frac{10.3 - 124.8}{124.8} * 100 = -91.7\%$$

AT 80 K:

$$C_S = 10.4\sqrt{\frac{80}{300}} = 5.4 \text{ ℓ/s}$$

$$\frac{1}{S_S} = \frac{1}{1{,}100} + \frac{1}{5.4} \Rightarrow S_S = 5.37 \text{ ℓ/s}$$

$$\% \text{ REDUCTION} = \frac{5.37 - 68.2}{68.2} * 100 = -92.1\%$$

2. Technical Proposal - (Yamamoto)

SDC TECHNICAL PROPOSAL

MAGNET SECTION

2.1 TABLE OF CONTENTS

- SEE A DRAFT OUTLINE PROPOSAL

2.2 WRITING ASSIGNMENT

- PROPOSED GUIDE LINE:

  - MAGNETIC STATICS ... FERMILAB
  - INTERFACE WITH DETECTORS
  - CRYOGENICS (ASO SSCL)

  - COIL & COLD-MASS PART ... KEK
  - THERMAL DESIGN

  - VACUUM CHAMBER ... CO-WORK
  - SUPPORT
  - PROTYPE R&D WORK
  - SAFETY —— FNAL lead
  - POWER SUPPLY —— KEK + SSCL

2.3 EDITING AND MECHANICS PROPOSED

- CO ORDINATING EDITOR ... A. YAMAMOTO
- TECHNICAL CO-EDITORS ...
  - FNAL : R. FAST
  - KEK : A. YAMAMOTO
- MECHANICS :
  - DISCUSSIONS ON CONTENTS, AND TABLES AND FIGURES.
  - WRITING FIRST DRAFT BY PERSONS ASSIGNED
  - CHECK AND MODIFY BY ALL
  - DISCUSSION IN NEXT MEETING
  - FORMATTING BY TECHNICAL CO-EDITORS
  - CHECK BY ALL
  - SUBMITTING TO GENERAL CO-ORDINATING EDITOR.

FNAL send matt to KEK by E-mail
FAX figures

Schedule
AY deliver draft to Gil by Dec 12.
Fermilab matt to AY, Nov 20, text as E-mail
figures by fax

1st draft package by Nov 29 — E-mail

DRAFT-Nov. 5, 1991

DRAFT OUTLINE OF THE MAGNET SECTION FOR THE SDC TECHNICAL PROPOSAL WITH TABLES AND FIGURES

Co-editors in the magnet subgroup : R. Fast (FNAL) and A. Yamamoto (KEK)

1. INTRODUCTION ..... KEK (FNAL)
   1.1. Technical backgroud in development of thin superconducting solenoids. A. Yamamoto
      Table 1-1. Development of various superconducting thin solenoid
   1.2. Boundary conditions for the SDC thin solenoid. B. Kephart
      Table 1-2. Basic requirement and boundary conditions
   1.3. New concepts for the SDC solenoid design.
      Fig. 1-1. E/M plots in various solenoid magnets.

2. MANETIC FIELD DESIGN ..... FNAL (KEK)
   2.1. Field analysis B. Wands
      Fig. 2-1. Coil and Iron yoke configurations.
      Fig. 2-2. Magnetic field distribution in the solenoid.
      Fig. 2-3. Integral B dl v.s. psuedorapidity
      Fig. 2-4 EXCITATION CURVES F. B. ...
   2.2 Electromagnetic force
      Table 2-1. Field uniformity and electromagnetic forces in various option.

3. THIN SOLENOID MAGNET DESIGN ..... KEK.(FNAL)
   3.1. General design
      Table 3-1. Design parameter of the SDC thin solenoid.
      Table 3-2. Transperency of the solenoid.
      Fig. 3-1. Schematic view of the SDC thin solenoid <
      Fig. 3-2. Coil end cross section of the solenoid. < Fig. 3.3 x v.s. y. (Fast)
   3.2. Superconductor
      Table 3-3. Design parameter of the SDC superconductor.
      Table 3-4. Yield strength of pure Al as a function of RRR.
      Fig. 3-3. Schematic view of the superconductor.
      Fig. 3-4. Superconductor characteristics
      Fig. 3-5. Self field effect of the SDC superconductor in the coil. Question
      Joint.
   3.3. Coil design
      Table 3-5. Mechanical characteristics of materials used in the SDC coil. → Appen
      Table 3-6. Mechanical stability of the SDC coil.
      Table 3-7. Quench stability and safety in the SDC solenoid coil.
      Fig. 3-6. Schematic view the SDC solenoid coil.
      Fig. 3-7. Mechanical deformation during excitation.
      Fig. 3-8. Mechanical stress distribution in the coil.
      Fig. 3-9. Quench characteristics of the SDC solenoud.

Jo

3.4. Radiation shield — effect of quench eddy current.

3.5. Vacuum chamber : two options (KEK / FNAL)
- Table 3-8. Technical comparisons of isogrid and honycomb vauum wall
- Fig. 3-10. Schematic view and cross sections of isogrid vacuum wall.
- Fig. 3-11. Schematic view and assembly process of honeycomb vacuum wall.

3.6. Coil support : two options (KEK / FNAL)
- Table 3-9. Technical comparison of the coil support system.
- Table 3-10. Basic Properties of uniaxial GFRP rods for the SDC solenoid. coil support system.
- Table 3-11. Design characteristics of the seperate function coil support system.
- Table 3-12. Design characteristics of the Warren truss coil support system.
- Fig. 3-11. Schematic view of the Warren truss support system.
- Fig. 3-12. Cross sectional view of the seperate function support system.

3.7. Chimney (KEK / FNAL)
- Fig. 3-13. Cross sections of the chimney and service port.

3.8. Thermal design and cool down characteristics (KEK / FNAL)
- Table 3-13. Thermal balance in the SDC thin solenoid.
- Table 3.14. Cooling design parameters of the SDC solenoid. Andy
- Table 3-15. Comparison of thermosiphone cooling with forced two phase helium cooling.
- Fig. 3-14. Cool down characteristics of the SDC solenoid coil
- Fig. 3-15. Compressor power as a function of the radiation shield temperature.

3.9. Diagnostics and Instrumentation (KEK)
- Table 3-16. Diagnostics and instrumentations in the SDC solenoid.
- Fig. 3-16. Layout of the sensors in the SDC solenoid.

3.10. Magnet assembly and initial test (KEK)
- Fig. 3-17. Flow diagram of the magnet assembly.

4. TRANSPORTATION, INSTALLATION AND TEST ..... KEK/FNAL

4.1. Transportation

4.2. Installation / Schedule — Cryostat supports to calorimeter — Rich. — Rev. and matl. P. A.

4.3. Test in iron and ~~and~~ field measurement .

5. CRYOGENICS ..... FNAL (KEK)

5.1. General design
- Table 5-1. Requirments on the SDC cryogenics Andy
- Fig. 5-1. Proposed cryogenic flow diagram for the SDC thin solenoid.

5.2. Refrigerator
- Fig. 5-2. Layout of the cryogenic system at the experimental site. Richardson

5.3. Control dewar
- Fig. 5-3. Concept of the control dewar.

5.4. Control system BR

6

6. ELECTRICAL SYSTEM ..... FNAL (KEK)

6.1. Power Supply

Table 6-1. Design parameters of the power supply for the SDC solenoid.

Fig. 6-1. Flow diagram and front views of the power supply.

6.2. Switching and energy recovery system

6.3. Control system B.R.

7. PROTOTYPE R&D ..... KEK/FNAL

7.1. Coil and cold part ..... KEK

Table 7-1. Design parameters of the prototype R&D solenoid magnet.

Fig. 7-1. Cross section of the SDC prototype superconductor

Fig. 7-2. RRR v.s. yield strength of the SDC solenoid stabilizer aluminum.

Fig. 7-3. Stress strain curve of the SDC solenoid stabilizer aluminum.

Fig. 7-4. Picture of R&D coil winding.

Fig. 7-5. Magnetic flux lines in the prototype solenoid.

Fig. 7-6. Fz and Bc as a function of the coil length

8.2. Vacuum chamber and warm part ..... FNAL

Fig. 7-7. Isogrid vacuum wall for the prototype vacuum wall.

Fig. 7-2. ...

Fig. 7-3. ...

8.3. Test plan ..... KEK

8. SAFETY AND PROTECTION ..... FNAL/KEK ?

9. SCHEDULE ..... KEK/FNAL ?

Table 9-1. A plan for the schedule for development of the SDC thin solenoid.

10. SUMMARY ..... FNAL (KEK)

From: FNAL::FAST 4-NOV-1991 14:45:43.54
To: FAST
CC: FAST
Subj: techprop.outline;5

	Page Allocation
1. Introduction---G. Trilling	5
2. Overview of the Detector---M. Gilchriese	20
2.1. Introduction (isometric, elevation, end views + param. list)	
2.2. Tracking System (overall drawing and detailed params list)	
2.2.1. Silicon Tracker (1 drawing)	
2.2.2. Barrel Tracker (1 drawing)	
2.2.3. Intermediate Tracker (1 drawing)	
2.2.4. Performance Summary	
2.3. Superconducting Solenoid (cut-away drawing + params. list)	
2.4. Calorimeter Systems	
2.4.1. Central Calorimeter (2 drawings + params list)	
2.4.2. Forward Calorimeter (1 drawing + params list)	
2.5. Muon System	
2.5.1. Overview (nomenclature drawing + params)	
2.5.2 Barrel System	
2.5.3. Forward System	
2.5.4. Performance Summary	
2.6. Electronics Systems	
2.6.1. Overview	
2.6.2. Front-end Systems	
2.6.3. Data Acquisition System	
2.6.4. Trigger System	
2.6.5. Other Electronics Systems	
2.7. Computing Systems	
2.7.1. On-line System	
2.7.2. Off-line System (very brief)	
3. Physics Performance---K. Einsweiler	100
4. Central Tracking System---A. Seiden	100
5. Superconducting Solenoid---A. Yamamoto	25
6. Calorimeter System---L. Nodulman	100
7. Muon System---G. Feldman	100
8. Electronics Systems---F. Kirsten	150
9. On-line Computing---A. Fry	15
10. Off-line Computing---L. Price	50
11. Safety---J. Elias	10
12. Experimental Facilities---T. Thurston	20
13. Installation and Commissioning---M. Harris	20
14. Test Beam Program---J. Siegrist	10
15. Cost and Schedule Summary---M. Gilchriese	5
15.1 Cost Summary	
15.2 Schedule Summary and Major Milestones	

4.1 - P.T. Schedule (Stanek)

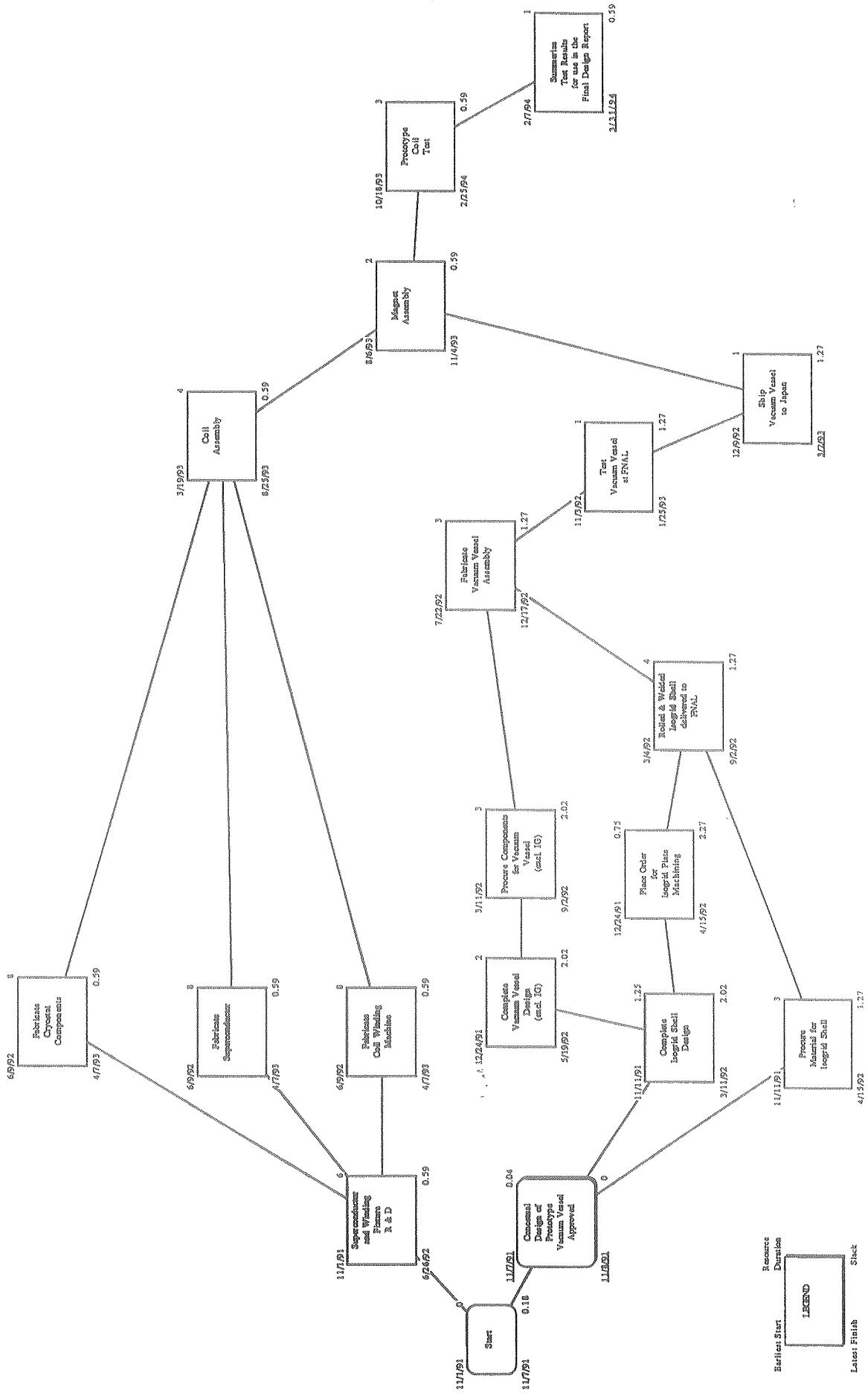

SPECIFIC COST/SCHEDULE QUESTIONS

PROTOTYPE MAGNET:

Schedule Questions (Supply The Expected Dates/Durations)

	START DATE	DURATION
1) Preliminary Design Review		
2) Final Design Review		
3) Safety Analysis Review		
4) Superconductor Procurement		
5) Coil Winding Machine Development		
6) Coil Winding Assembly		
7) Cryostat Element Fabrication { Shields, Supports }		
8) Vacuum Vessel Fabrication		
9) Coil & Cryostat Assembly		
10) Coil Cooling & Excitation Test		
11) Evaluation and Engineering Design Report		
12) Power Supply System Fabrication		

Cost Questions (reference attachment)

1) Does the cost include all labor working on project?
2) "Coil winding = $1.2M" Does this include winding machine?
3) "Cryostat & Cryogenics = $1.0M" Can this be broken down better?
4) Does the power supply for prototype, eventually become the real power supply for SDC?
5) What is "monitors"? / Control System?
6) Does "excitation test" include cryogen costs, labor?
7) Where is the cost for the vacuum vessel?

SDC SOLENOID & CRYOGENICS OVERALL PLAN (PROTOTYPE COMPLETED PRIOR TO MAIN COIL WINDING)

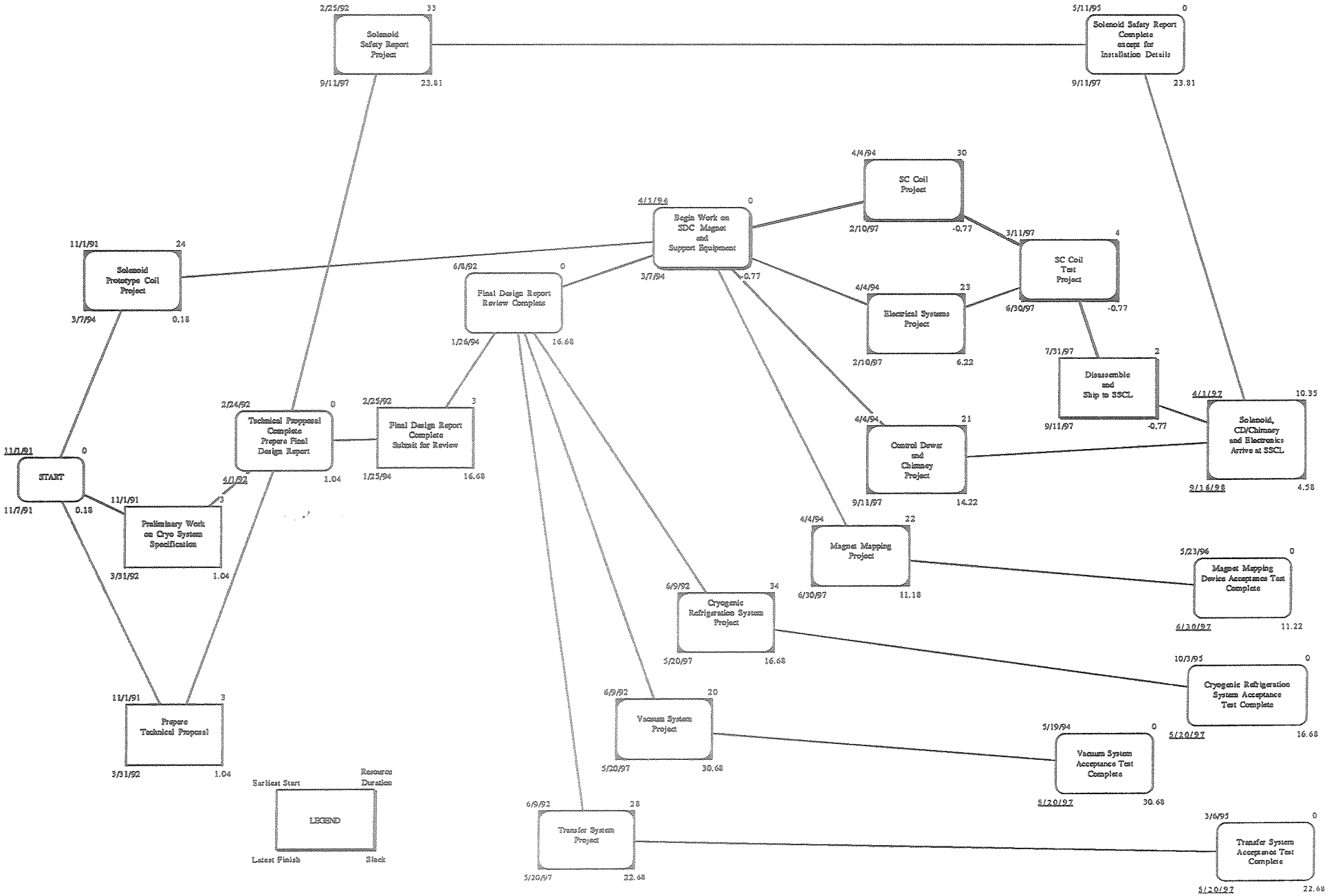

COST / SCHEDULE QUESTIONS:

SDC Magnet: (Supply the expected dates / durations)

	START DATE	DURATION
1) Preliminary Design Review		
2) Final Design Review		
3) Preliminary Safety Analysis Review		
4) Final Safety Analysis Review		
5) Superconductor Procurement		
6) Cryostat Element Fabrication		
- Supports		
- Shields		
- Vacuum Vessel		
7) Magnet Assembly		
8) Control Dewar Assembly		
9) Cooldown & Excitation Test		
10) Ship to SSCL		

11) What is part of the initial test of magnet?

12) Is the coil winding machine used for prototype usable for the SDC magnet?

13) How much of the magnet component fabrication is done in parallel?

14) We would like a few sentences on what is included in each line item cost element. Labor Costs? / Procurement Costs?

Prototype Solenoid $5.4 M

design, management	$.36 M
superconductor	$1.1 M
coil winding	$1.2 M
cryostat + cryogenics	$1.0 M
Same as S.S. supply → power supply for test	$.86 M
monitors	$.14 M
assembly & inspection	$.29 M
excitation test	$.36 M

SDC Solenoid $26.8 M

(Less 20% cont

Less Install & Test = [25.7 M] → (22.33 M
(21.417 M

Management & Integration	(67) =	design, management	$1.4 M	(1.167
S/C wire	(6) =	superconductor	$5.7 M	(4.75
Coil Fabricate & Winding	(7) =	coil winding	$5.6 M	(4.67
Cryostat System	(23) =	cryostat	$5.4 M	(4.5
Instrumentation	(8) =	monitor system ?	$1.2 M	(1.0
Assembly	(10) =	assembly & inspection	$3.6 M	(3.0
Test	(14) =	excitation test	$2.1 M	(1.75
Transportation to SSCL	(66) =	transportation	$0.71 M	(.59
Goes to WBS Element 8.	⇒	installation, test	$1.1 M	(.97

140 yen = $1

Table 9-1. A plan for the schedule for development of the SDC thin solenoid.

Year	R&D ITEMS
JFY1990 (Apr. / 90 -)	<u>Basic R&D</u> - High strength Al stabilized superconductor -.Inner winding technique
JFY1991 (Apr. / 91 -)	<u>Prototype (1/4 L) Coil Development</u> - Superconductor (6 km) fabrication - Coil inner - winding machine development
JFY1992	- Coil winding - Cryostat element
JFY1993	- Assembly of coil and cryostat - Cooling and excitation test - Evaluation and engineering design report
JFY1994	<u>Main Magnet Fabrication</u> - Superconductor (25 km) - Cryostat element
JFY1995	- Coil winding - Magnet assembly
JFY1996	- Cool - down and excitation test in air - Transportation to SSCL - Installation into the SDC detector iron structure
JFY1997	- Cool - down and excitation test in iron - Field measurement

4.1 - P.T. Schedule (Yamamoto)

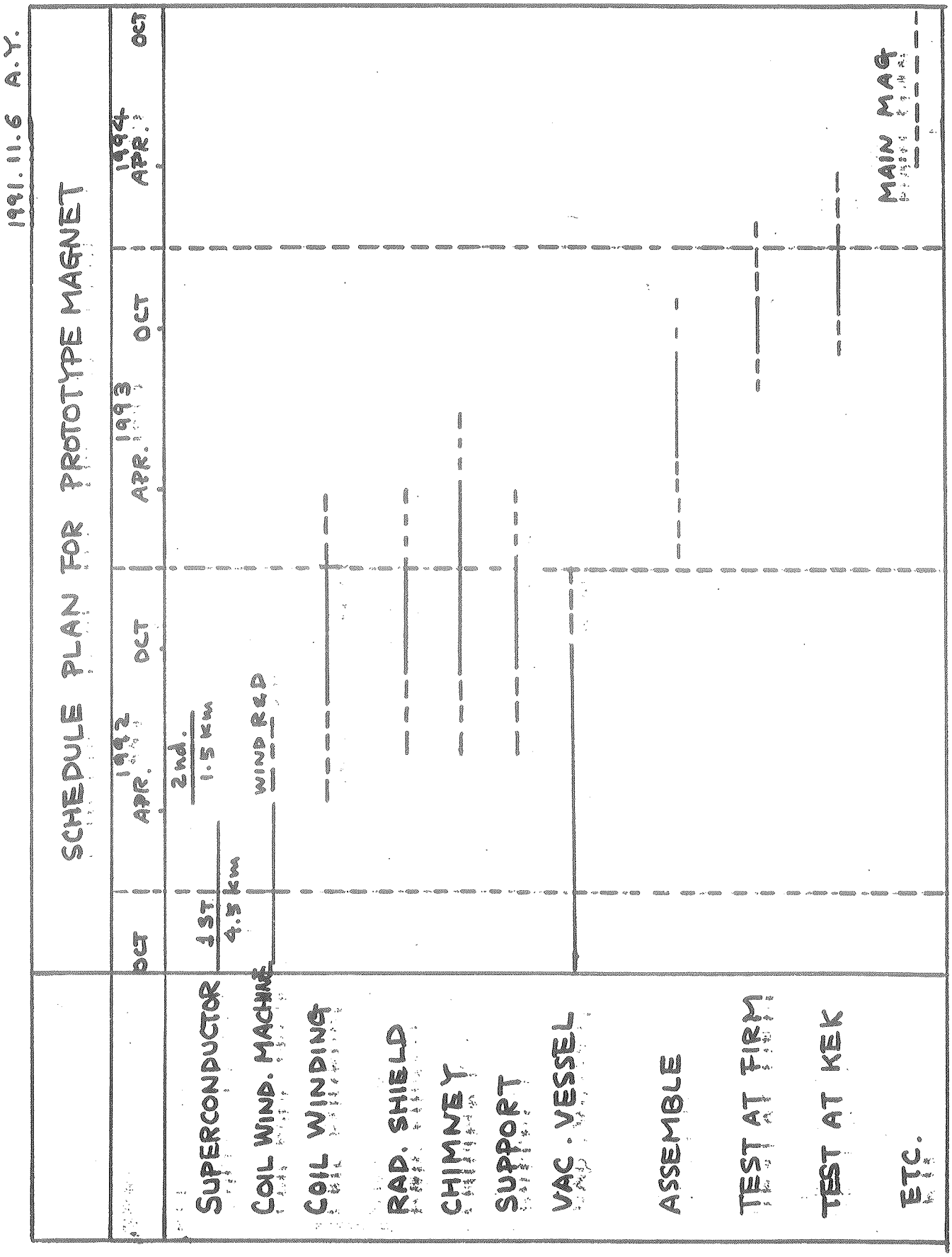

R&D AND CONSTRUCTION SCHEDULE PROPOSED

JFY 1990 4/1/90 – 3/31/91	BASIC R&D FOR CONDUCTOR & WINDING
JFY 1991 4/1/91 – 3/31/92	PROTOTIPE MAG (1/4 L) DEV. - SUPERCONDUCTOR (4.5 km) - COIL WINDING MACHINE
JFY 1992 4/1/92 – 3/31/93	- SUPECONDUCTOR (1.5 km) - COIL WINDING - CRYOSTAT ELEMENTS
JFY 1993 4/1/93 – 3/31/94	- MAGNET ASSEMBLY - 1/4 MAG. TEST (150%)
JFY 1994 4/1/94 – 3/31/95 S 1996 4/1/96 – 3/31/97	MAIN COIL CONSTRUCTION
JFY 1997 4/1/97 – 3/31/98	INSTALLATION INTO SDC