SDC SOLENOID DESIGN NOTE #160

TITLE: Can a person walk on the inner vacuum shell ?
AUTHOR: Ang Lee and Ron Fast
DATE: Oct 25, 1991

QUESTION: Can a person walk on the inner vacuum shell of the completed solenoid ?
ANSWER: Yes. This design note contains a finite element analysis of the above case. It is assumed that the person with a 200 (lbf) weight stands at the longitudinal center of the inner shell with and without a vacuum space evacuated. The edges are assumed to be held circular during the deformation. Total of 400 shell elements is used to model one quarter size shell as shown in Figure 1. The calculated results are shown in Table 1. It is found that the maximum deflection of the inner shell with a thickness 1/4 " is about 0.08918", and the maximum stress is about 7315 (psi), which is far below the allowable stress (10 ksi) for aluminum 5083. The conclusion is that the present design is adequate for a person to walk on the inner shell.

Table 1-a Summary

shell thickness 1/4"(6.35 mm)	without vacuum	with vacuum
maximum deflection	0.055 " (1.40 mm)	0.08918" (2.27 mm)
maximum stress	2499 psi (17.22 MPa)	7315 psi (50.43 MPa)

Table 1-b Summary

shell thickness 3/8" (9.53 mm)	without vacuum	with vacuum
maximum deflection	0.0238 " (0.61 mm)	0.0394" (1.00 mm)
maximum stress	1447psi (9.98 MPa)	4472 psi (30.83 Mpa)

Appendix

Figure 1 The finite element model (ANSYS, shell element, STIFF-63)
Figure 2 The stress distribution for shell thickness 1/4 " without vacuum
Figure 3 The stress distribution for shell thickness 1/4 " with vacuum
Figure 4 The stress distribution for shell thickness 3/8" without vacuum
Figure 5 The stress distribution for shell thickness 3/8 " with vacuum
Figure 6 The deformed configuration of inner shell without vacuum
Figure 7 The deformed configuration of inner shell with vacuum

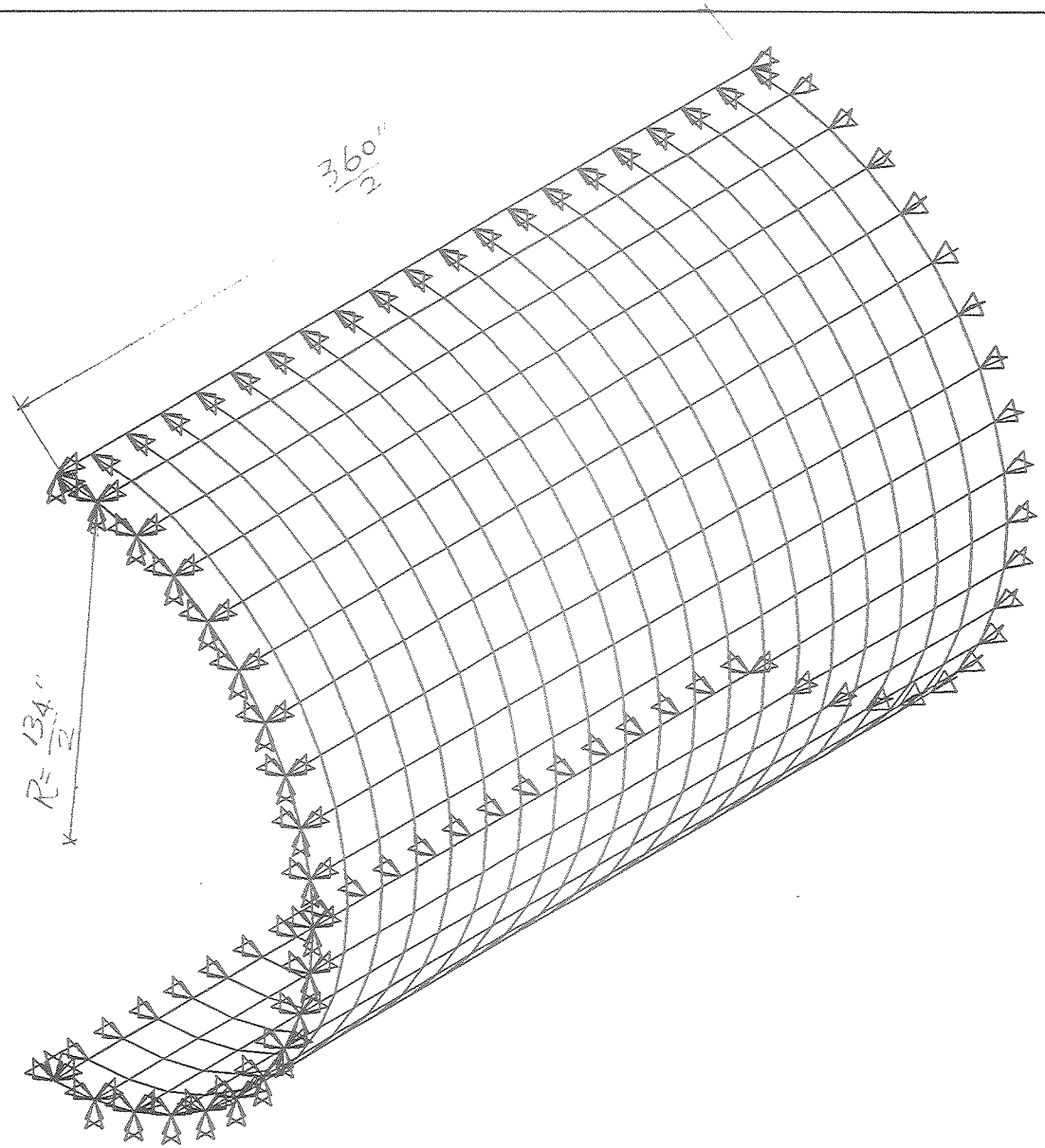

ANSYS 4.4A
OCT 24 1991
16:02:35
PLOT NO. 1
POST1 ELEMENTS
TYPE NUM
TDIS

XV =1
YV =1
ZV =1
DIST=115.637
XF =33.5
ZF =-90
PRECISE HIDDEN

Figure 1 The finite element model (ANSYS, shell element, STIFF-63)

TITLE

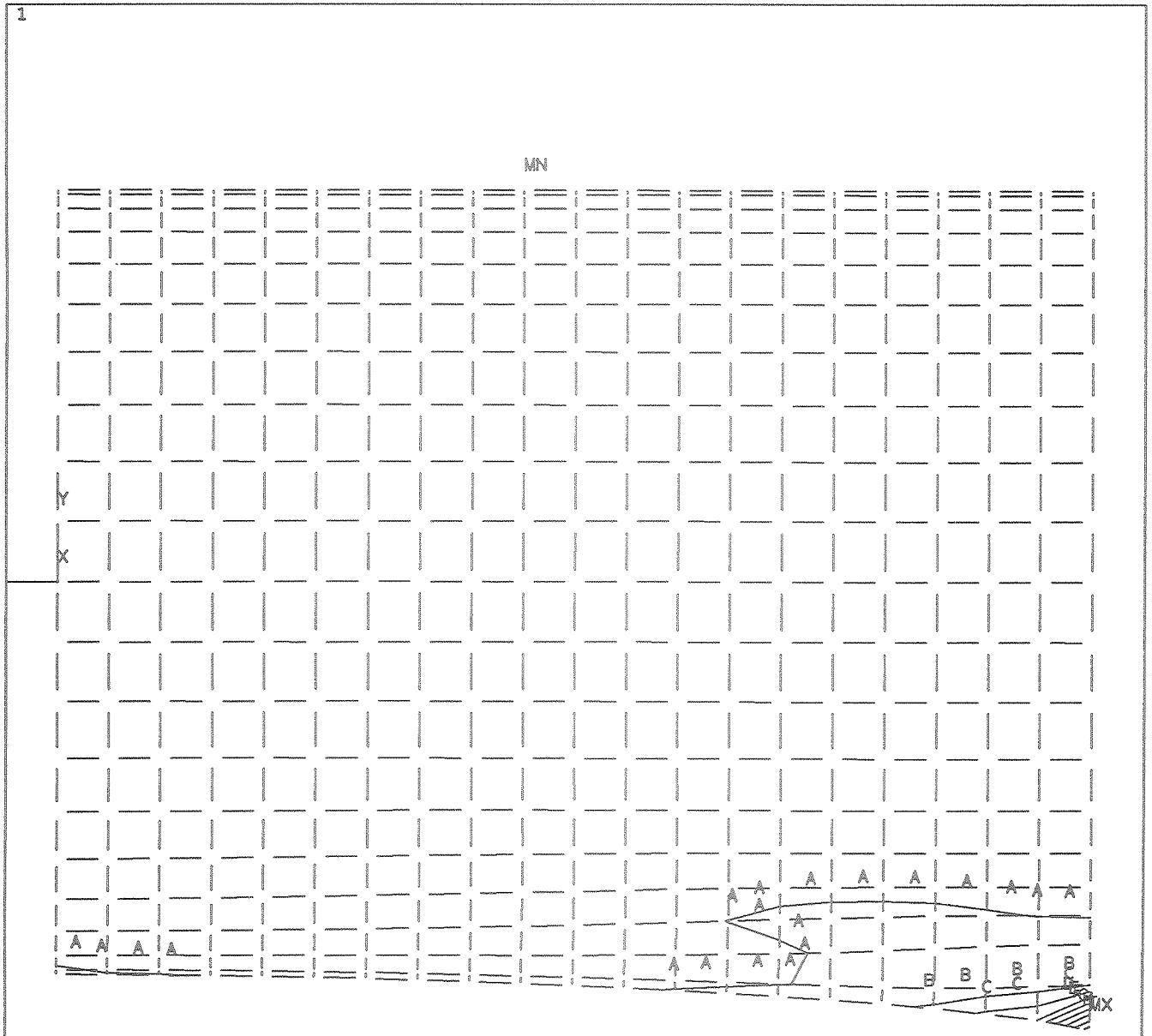

Figure 2 The stress distribution for the shell thickness 1/4 " without vacuum load

ANSYS 4.4A
OCT 24 1991
15:19:18
PLOT NO. 1
POST1 STRESS
STEP=1
ITER=1
SI (AVG)
TOP
DMX =0.05503
SMN =8.758
SMNB=7.058
SMX =2236 psi
SMXB=2499 psi

XV =1
DIST=99
XF =33.5
ZF =-90
A =132.474
B =379.904
C =627.335
D =874.768
E =1122
F =1370
G =1617
H =1864
I =2112
(psi)

1/4" thick
without vaccum Load
SI 2499 psi
Dmax = 0.055 "

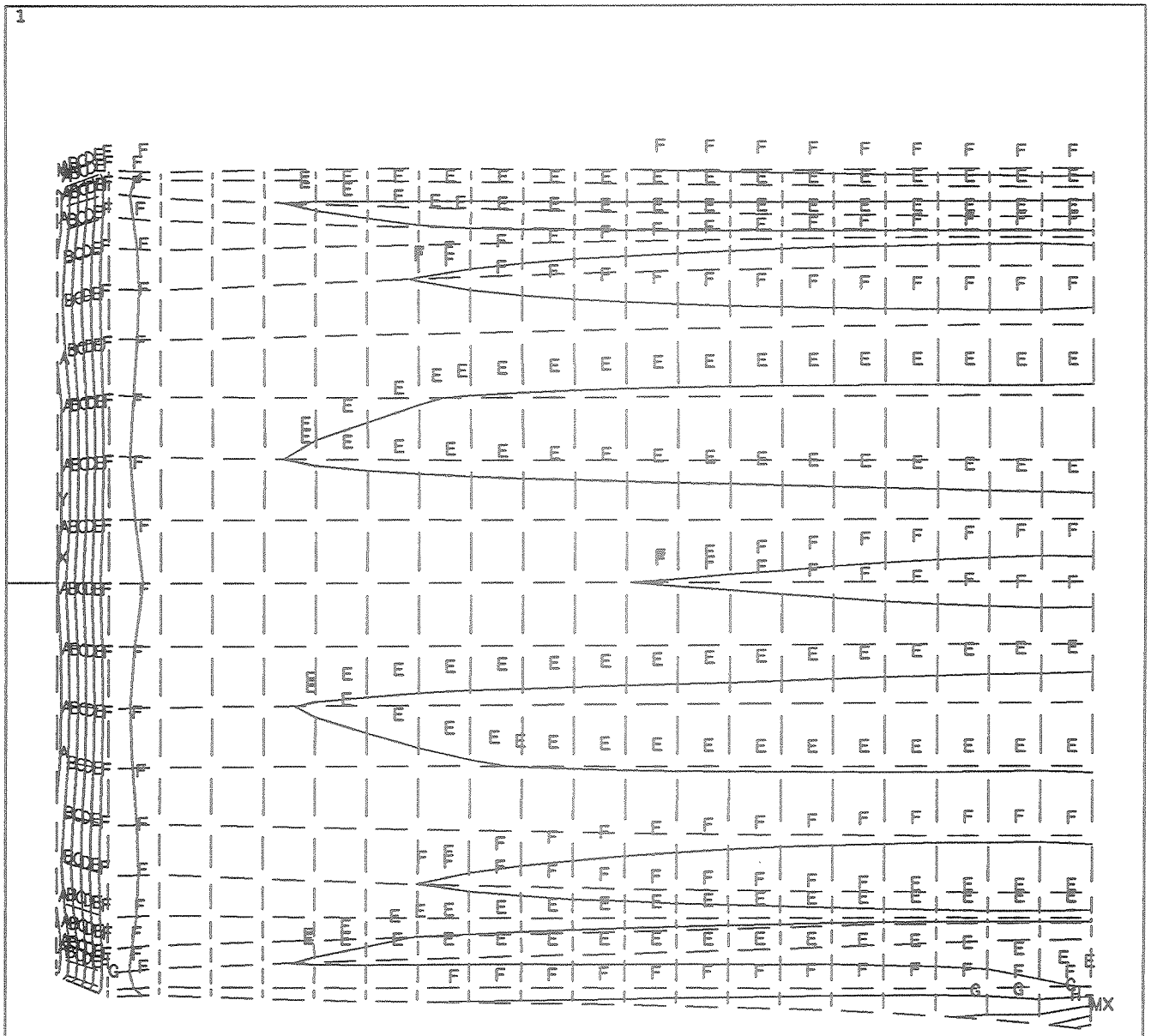

ANSYS 4.4A
OCT 24 1991
15:23:20
PLOT NO. 1
POST1 STRESS
STEP=2
ITER=1
SI (AVG)
TOP
DMX =0.08918 "
SMN =440.829
SMNB=75.258
SMX =6968 PSI
SMXB=7315 PSI

XV =1
DIST=99
XF =33.5
ZF =-90
A =803.448
B =1529
C =2254
D =2979
E =3704
F =4430
G =5155
H =5880
I =6605
(PSI)

1/4" thick
with vaccum Load

SI = 7315 PSI

Dmax = 0.08918 "

TIT Figure 3 The stress distribution for the shell thickness 1/4 " with vacuum load

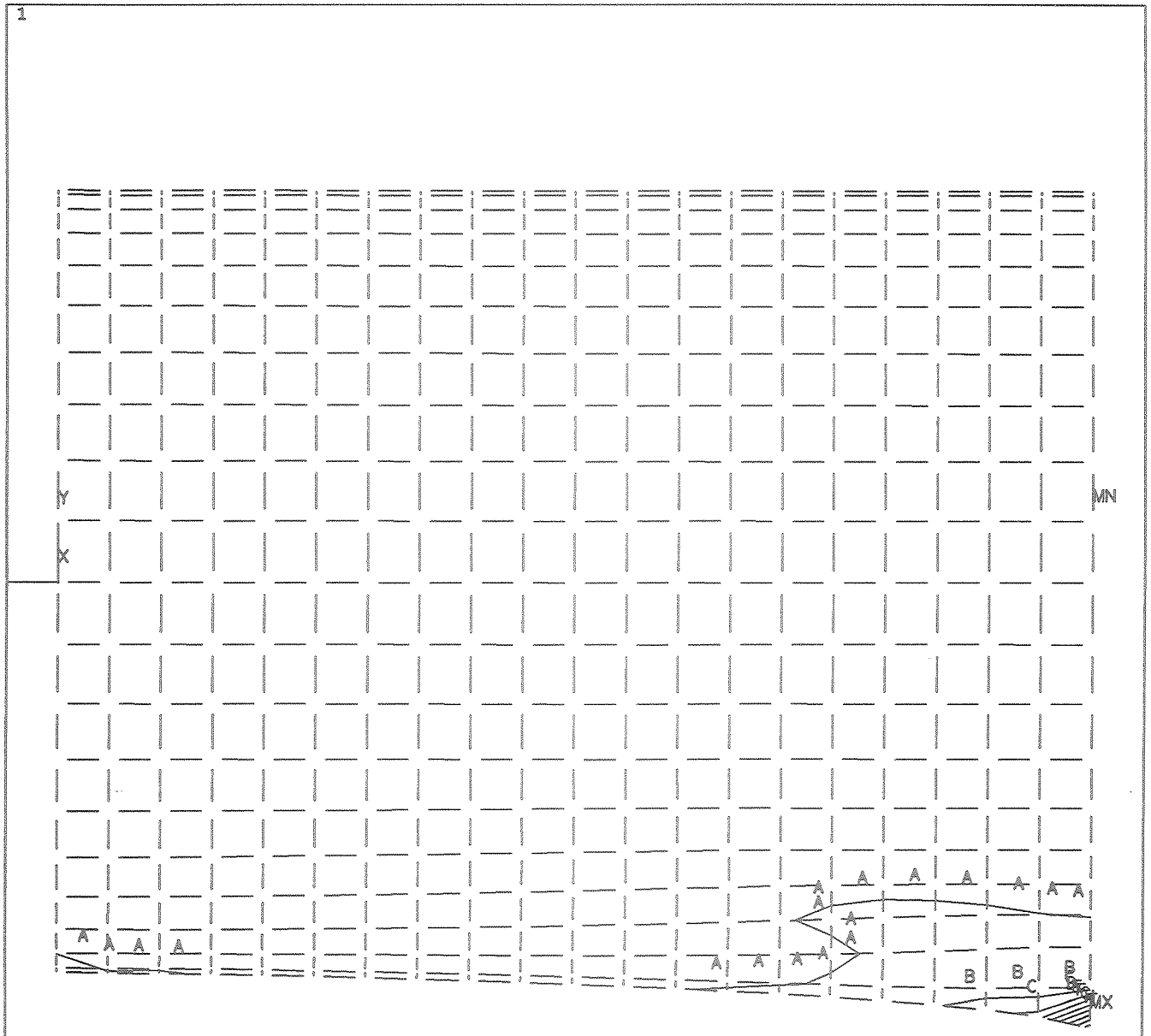

ANSYS 4.4A
OCT 24 1991
15:53:57
PLOT NO. 1
POST1 STRESS
STEP=1
ITER=1
SI (AVG)
TOP
DMX =0.023833 "
SMN =5.794
SMX =1299 psi
SMXB=1447 psi

XV =1
DIST=99
XF =33.5
ZF =-90
A =77.634
B =221.315
C =364.995
D =508.675
E =652.355
F =796.036
G =939.716
H =1083
I =1227

(psi)

3/8" thick
without vacuum load

SI = 1447 psi

D_{max} = 0.023 "

Figure 4 The stress distribution for the shell thickness 3/8" without vacuum load

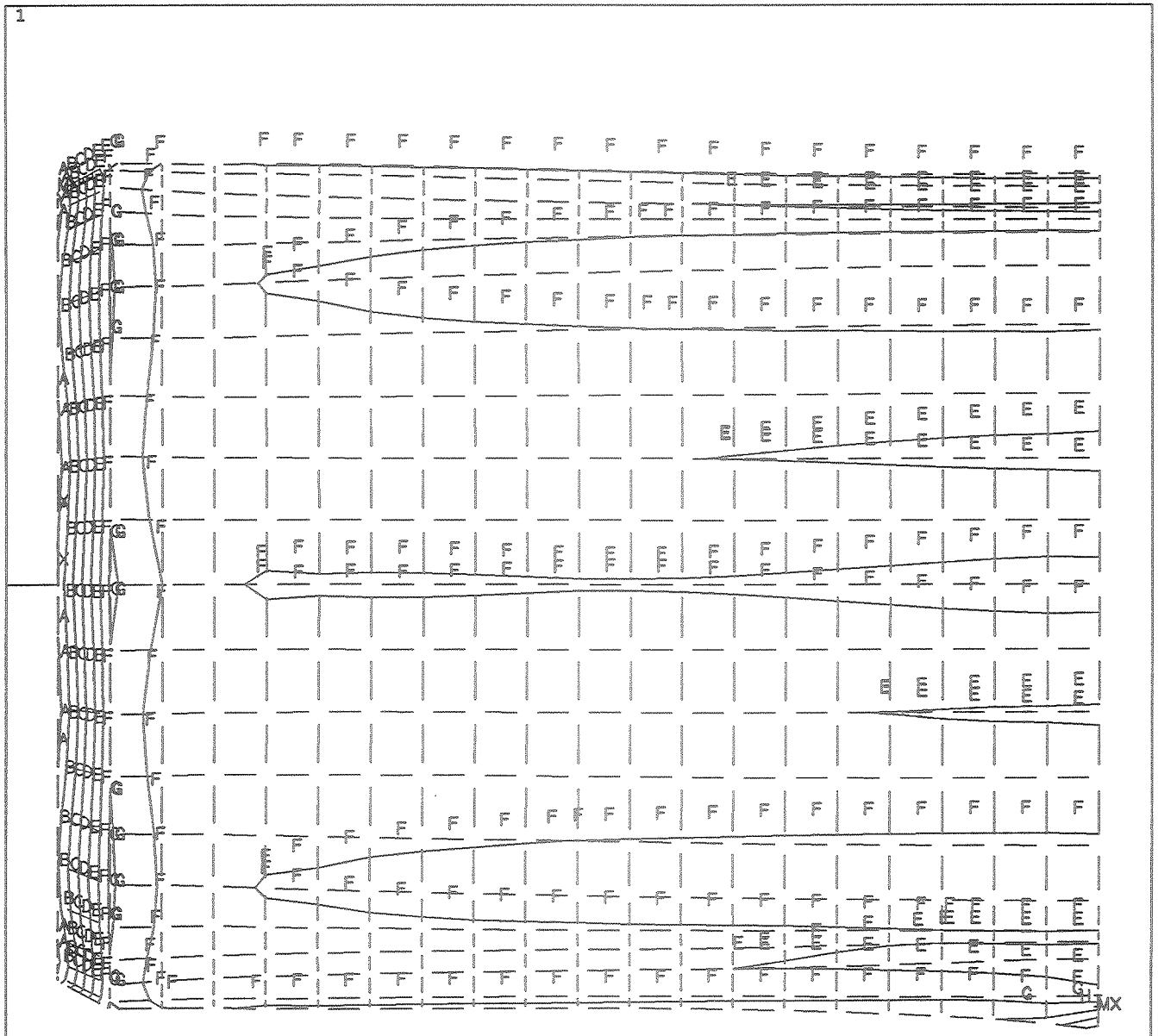

ANSYS 4.4A
OCT 24 1991
16:00:32
PLOT NO. 1
POST1 STRESS
STEP=2
ITER=1
SI (AVG)
TOP
DMX =0.039409 "
SMN =565.191
SMNB=344.508
SMX =4249 psi
SMXB=4473 psi

XV =1
DIST=99
XF =33.5
ZF =-90
A =769.861
B =1179
C =1589
D =1998
E =2407
F =2817
G =3226
H =3635
I =4045

(psi)

$\frac{3}{8}$" thick
with vacuum load
SI = 4473 psi
Deflection 0.039"

Figure 5 The stress distribution for the shell thickness 3/8 " with vacuum load

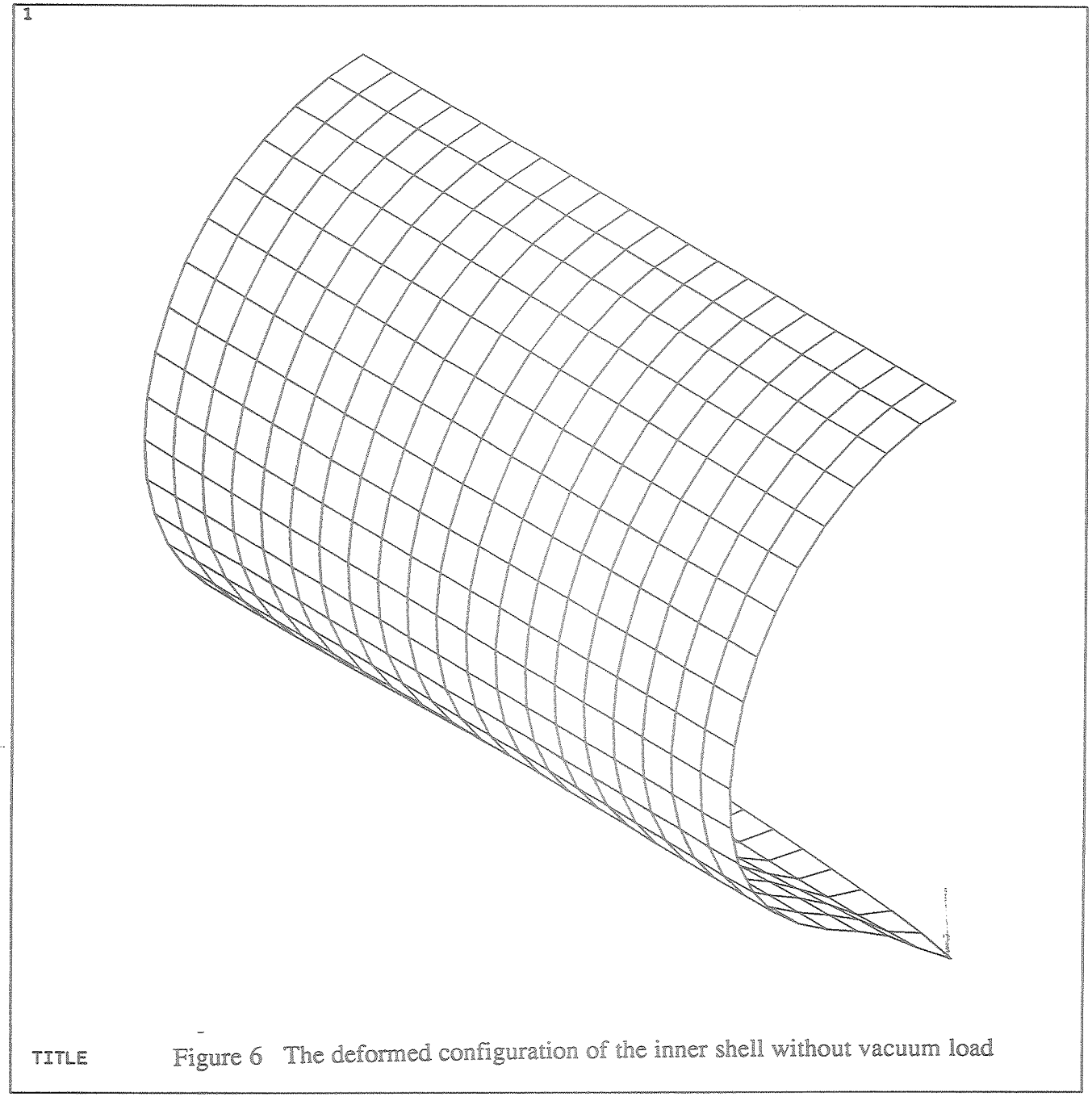

Figure 6 The deformed configuration of the inner shell without vacuum load

Point Load + weight

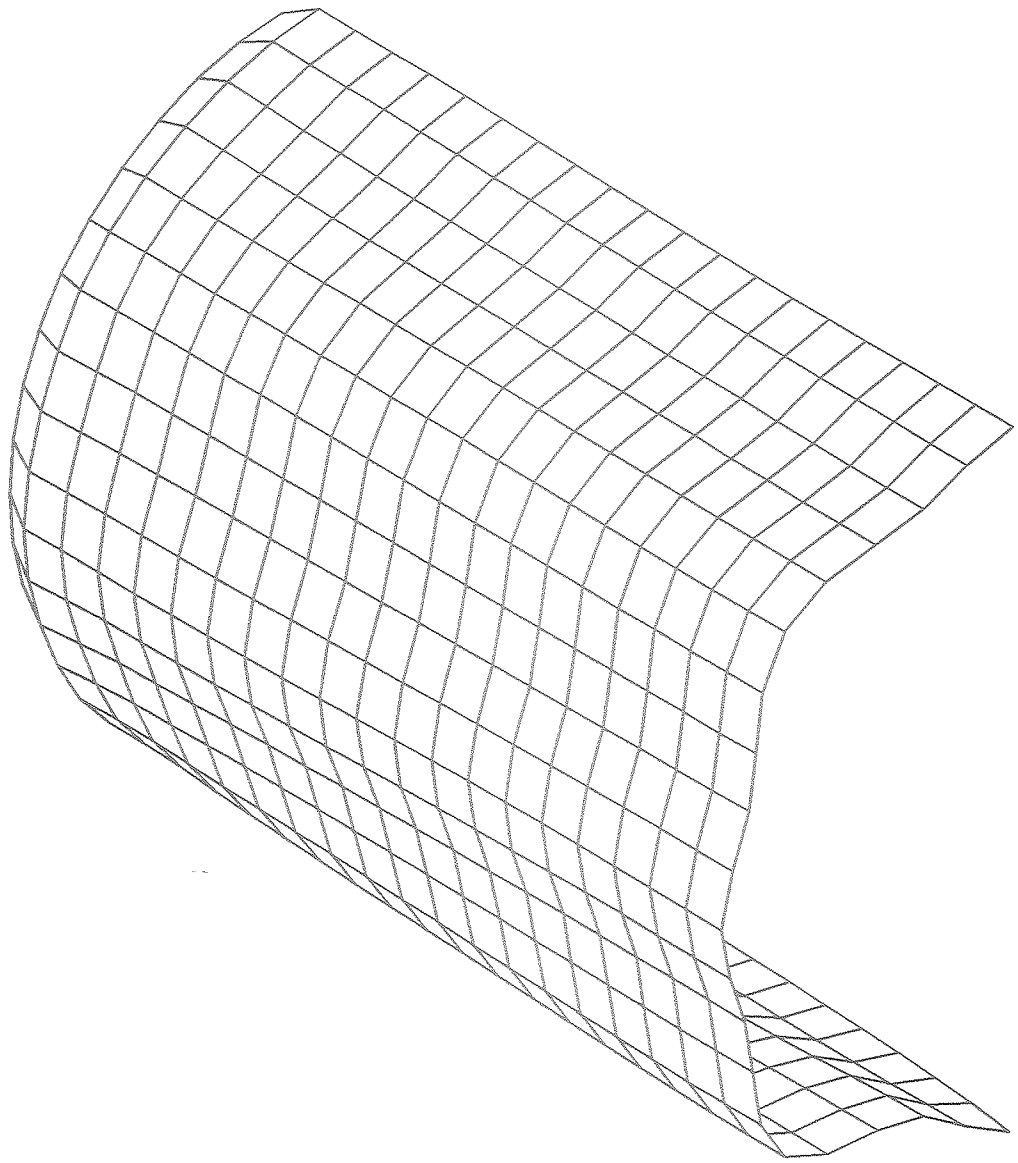

ANSYS 4.4A
OCT 24 1991
16:07:05
PLOT NO. 1
POST1 DISPL.
STEP=2
ITER=1
DMX =0.039409
ERPC=12.959

DSCA=293.428
XV =1
YV =1
ZV =-1
DIST=115.637
XF =33.5
ZF =-90
PRECISE HIDDEN

POINT LOAD + WEIGHT
+ VACUUM LOAD.

Figure 7 The deformed configuration of the inner shell with vacuum load