Fermilab

SDC SOLENOID DESIGN NOTE #158

TITLE: Stress Analysis of the SDC Vacuum Shell and Panel Weld Joints

AUTHOR: Lyle W. Swenson, Jr., PS Associates, Inc.

DATE: September 11, 1991

Stress Analysis of the SDC Vacuum Shell and Panel Weld Joints (Task 4)

Prepared For

Fermilab (PO B14690)

September 11, 1991

Prepared by

Lyle W. Swenson, Jr.

PS Associates, Inc.
5755 Oberlin Drive, Suite 300
San Diego, CA 92121-4717

1.0 Introduction

This report presents static stress analysis results for the SDC vacuum shell and panel weld joints. Material properties, modelling details, and analysis results are presented in the following four sections.

Section 2.0 discusses the finite element model used to perform the static stress analysis. Material properties, model geometry, applied loading, and boundary conditions are presented in detail.

Section 3.0 presents analysis results for the Isogrid vacuum shell. Internal forces, moments, and stresses values are presented at both nodes and elements.

Sections 4.0 discusses panel joint deformation and presents result for panel joint forces, moments, and stresses.

Finally, section 5.0 presents a summary of the analysis results and collects the principal internal loads and stress values for the vacuum shell and panel joints.

2.0 Finite Element Modelling of the Vacuum Shell and Panel Joints

2.1 Material Properties

The vacuum shell structure is considered made from aluminum 2219-T851. Properties for this material are taken from MIL-HDBK-5C [1] and are given in Table 2-1 below.

Table 2-1. Properties for Al 2219-T851 (Room Temperature)

Young' Modulus	10.5×10^6 psi
Poisson's Ratio	0.33
Weight Density	0.102 lb/in^3
Tensile Ultimate Strength	62,000 psi
Tensile Yield Stress	47,000 psi
Allowable Stress	15,500 psi

The allowable stress value given above is determined from the ASME Pressure Vessel Code rule (cf. [2], Appendix P):

allowable stress = MIN (0.25 * ultimate strength, 0.67 * yield stress)

Mechanical properties for the panel joint are assumed to be in the "0" temper condition and were taken from data supplied by Astro Aluminum Treating Company, Inc. The full data sheet is given in Appendix A, and the data for the "0" temper condition are presented in Table 2-2.

Table 2-2. Properties for Al QQ-A-250/30A ("0" Temper)

Tensile Ultimate Strength	32,000 psi
Tensile Yield Stress	16,000 psi
Allowable Stress	8,000 psi

The allowable stress value is computed using the ASME rule given above. Notice that the "0" temper condition reduces the allowable stress to about half the allowable stress in the T851 condition.

2.2 Model Geometry

Basic geometry for the vacuum shell and panels was specified by Fermilab as presented in Table 2-3 below.

Table 2-3. Vacuum Shell Geometry

Shell Diameter	160.0 in
Shell Length	360.0 in
Panel Length	90.0 in

Three panels are welded longitudinally to form a cylinder segment and four cylinder segments are welded circumferentially to form the vacuum shell.

The current Isogrid design geometry is given in Tables 2-4 through 2-6. See my report for Task 1 [3] for a discussion of the dimensionless parameters and computation of section details.

Table 2-4. Isogrid Geometry

Node Spacing	a	6.9930 in
Web Width	b	0.1500 in
Flange Depth	c	0.2900 in
Web Depth	d	1.8000 in
Triangle Height	h	6.0561 in
Flange Width	w	1.0000 in
Skin Thickness	t	0.1100 in

Table 2-5. Isogrid Dimensionless Parameters

$\alpha = bd/ht$	0.4053
β	49.917
$\delta = d/t$	16.364
$\tau = c/t$	2.6264
$\mu = wc/ht$	0.4353

Table 2-6. Isogrid Section Parameters

Effective Area	A	0.2025 in^2/in
Flange Fiber Distance	Cf	1.4617 in
Skin Fiber Distance	Cs	0.7383 in
Shell Modulus	E*	7.13×10^5 psi
Bending Rigidity	D	1.77×10^6 in-lb
Moment of Inertia	I	0.1502 in^4/in
Extension Stiffness	K	2.39×10^6 lb/in
Weight Thickness	t_{bar}	0.3874 in
Effective Thickness	t_{eff}	0.2025 in
Shell Thickness	t*	2.9832 in

Geometry for the panel joint cross section is shown in Figure 2.1. Dimension values for this section are given in Table 2-7 and computed section properties are given in Table 2-8.

Table 2-7. Panel Joint Geometry

Section Height	h	2.20 in
Flange Width	w_f	2.00 in
Flange Thickness	t_f	0.29 in
Rib Width	w_r	0.15 in
Rib Height	h_r	1.80 in
Skin Thickness	t_s	0.11 in
Skin Doubler	t'_s	0.14 in

Table 2-8. Panel Joint Section Properties

Area	A	1.4590 in^2
Centroid Position	C	1.2137 in
Moment of Inertia	I_y	0.4098 in^4
Moment of Inertia	I_z	1.0057 in^4

The SDC vacuum shell and panel joints were modelled using a three-dimensional finite element representation. Figure 2.2 shows the shell model. Also part of this model are the panel joints which are shown separately in Figure 2.3. The origin of the model global coordinate system is located at the left end (chimney-end) of the shell, with the X-axis horizontal, the Y-axis vertical, and the longitudinal Z-axis increasing away from the shell.

Stress values are given referring to the element numbers shown in Figure 2.4. There are 36 elements around the circumference and 36 elements down the shell. Elements are numbered in rings of 35 elements around the circumference and continuing down the shell. A final longitudinal line of 36 elements closes the cylinder.

The vacuum shell model consists of 1296 shell elements, while the panel joints are represented using 216 beam elements. Referring to Figure 2.3, for each cylinder segment there is a circumferential ring and three longitudinal lines of beams (the first cylinder segment does not have a circumferential ring). The line numbers shown in the figure are associated with element numbers as given in Table 2-9.

There are 1332 nodes in the model.

Table 2-9. Panel Joint Element Numbers

Line	Element Numbers
1	1297 - 1305
2	1306 - 1314
3	1315 - 1323
4	1324 - 1359
5	1360 - 1368
6	1369 - 1377
7	1378 - 1386
8	1387 - 1422
9	1423 - 1431
10	1432 - 1440
11	1441 - 1449
12	1450 - 1485
13	1486 - 1494
14	1495 - 1503
15	1504 - 1512

2.3 Applied Loading

The analysis considered a single loading condition consisting of an external lateral pressure of 15 psi applied to the vacuum shell.

2.4 Boundary Conditions

Based on results from my report for Task 1 [3], the Isogrid shell can be considered clamped at the bulk heads. The left end of the shell was fully restrained, while the right end as permitted to move longitudinally.

3.0 Results for the Isogrid Vacuum Shell

Presented in this section are results for the Isogrid shell deformation, internal loads, and skin and flange stresses.

Figure 3.1 shows the deformed shell (note that the scale is greatly exaggerated). The maximum displacement is 0.071 inches and is the inward radial displacement of the shell. This value exceeds the previously reported value of 0.046 [3] because

the right end of the outer shell is unrestrained by the inner shell. Consequently, values given in this report will be slightly conservative.

Figures 3.2 through 3.11 show the moment resultants, force resultants, Isogrid skin stresses, skin von Mises stress, and the Isogrid rib stresses, respectively. These results are given as components in the local element coordinate system where "x" and "y" denote circumferential and longitudinal directions, respectively. Note that near the shell edges some nodal values in Figures 3.2 through 3.6 give substantially larger values than element values in Figures 3.7 through 3.11. This is expected because the peak bending values occur at the shell-bulk head interface.

Maximum and minimum values for the nodal internal loads are given in Table 3-1, while maximum and minimum values for the nodal stresses are given in Table 3-2.

Table 3-1. Nodal Isogrid Resultants

	Minimum	Maximum
Mx	-379 (2)	93 (1233)
My	-948 (7)	234 (74)
Mxy	-9 (41)	9 (39)
Nx	-1,250 (148)	-39 (1297)
Ny	-47 (370)	48 (1300)
Nxy	-20 (1305)	20 (1307)

Table 3-2. Nodal Isogrid Stresses

	Minimum	Maximum
Skin Sx	-6,132 (171)	-1,776 (1269)
Skin Sy	-4,469 (2)	1,052 (1228)
Skin Sxy	-59 (1259)	59 (1245)
Skin Sv	2,082 (1269)	6,188 (1168)
Flange S1	-6,125 (148)	354 (2)
Flange S2	-1,634 (74)	6,317 (6)
Flange S3	-1,634 (78)	6,317 (2)

Maximum and minimum values for the element internal loads are given in Table 3-3, while maximum and minimum values for the element stresses are given in Table 3-4.

Table 3-3. Element Isogrid Resultants

	Minimum	Maximum
Mx	-135 (7)	62 (72)
My	-411 (7)	175 (71)
Mxy	-10 (4)	10 (3)
Nx	-1,240 (141)	-183 (1233)
Ny	-47 (1234)	24 (318)
Nxy	-26 (1234)	26 (1235)

Table 3-4. Element Isogrid Stresses

		Minimum	Maximum
Skin	Sx	-6,108 (1088)	-1,543 (1233)
Skin	Sy	-2,170 (1234)	852 (1158)
Skin	Sxy	-82 (1235)	82 (1234)
Skin	Sv	1,823 (1233)	6,154 (1136)
Flange	S1	-6,128 (163)	-839 (1234)
Flange	S2	-1,200 (75)	2,733 (1233)
Flange	S3	-1,200 (72)	2,733 (1236)

From these results it can be seen that the peak Isogrid von Mises stress is 6,188 psi and the peak flange stress is -6,128 psi. These values are consistent with results reported for the full model [3].

4.0 Results for the Panel Weld Joints

Presented in this section are results for the panel joint deformation, internal loads, and stresses.

Figure 4.1 shows the deformed panel joints relative to their undeformed position (note that the scale is greatly exaggerated). Note the uniform radial deformation of the ring joints and the substantial bending of the longitudinal joints at the bulk heads.

Figures 4.2 through 4.9 show the end forces, moments, stresses, and extreme stresses, respectively. These results are given as components considered positive when directed along the local beam coordinate system. For each beam element,

a dextral coordinate system is given by the x-axis directed along the beam, the y-axis directed radially inward, and the z-axis tangent to the shell. The origin of the beam coordinate system is located at end-1, and the x-axis is directed from end-1 to end-2.

Maximum and minimum values for end-1 forces and moments are presented in Table 4-1, while maximum and minimum values for end-1 stresses are given in Table 4-2.

Table 4-1. Beam Forces and Moments for End-1

	Minimum	Maximum
Fx	-1,850 (1302)	5,121 (1395)
Fy	-434 (1297)	440 (1494)
Fz	-5 (1326)	5 (1327)
Mx	-50 (1389)	50 (1390)
My	-35 (1327)	34 (1326)
Mz	-3,962 (1297)	1,027 (1299)

Table 4-2. Beam Stresses for End-1

	Minimum	Maximum
Sx	-1,755 (1302)	4,858 (1395)
Sy	-85 (1327)	84 (1326)
Sz	-4,972 (1297)	1,289 (1299)
Smax	-1,718 (1302)	4,976 (1333)
Smin	-6,620 (1297)	4,845 (1451)

Maximum and minimum values for end-2 forces and moments are presented in Table 4-3, while maximum and minimum values for end-2 stresses are given in Table 4-4.

Table 4-3. Beam Forces and Moments for End-2

	Minimum	Maximum
Fx	-5,121 (1395)	1,850 (1302)
Fy	-440 (1494)	434 (1297)
Fz	-5 (1327)	5 (1326)
Mx	-50 (1390)	50 (1389)
My	-34 (1327)	35 (1326)
Mz	-1,029 (1492)	4,011 (1494)

Table 4-4. Beam Stresses for End-2

	Minimum	Maximum
Sx	-4,858 (1395)	1,755 (1302)
Sy	-84 (1327)	85 (1326)
Sz	-1,292 (1492)	5,034 (1494)
Smax	-4,845 (1454)	6,486 (1494)
Smin	-4,976 (1332)	1,715 (1301)

The peak longitudinal joint stress, located at the shell-bulk head interface, is found to have a value of 6,620 psi. This stress is due primarily from bending and secondarily from the tensile axial force.

The peak circumferential joint stress is found to be -4,976 psi. This stress is due to radial compression of the panel joint.

5.0 Discussion of Results

Peak internal loads and Isogrid stresses for the vacuum shell are given in Table 5-1. The Isogrid skin has a peak von Mises stress value of 6,188 psi and the flange experiences a peak compressive stress of -6,128 psi. The allowable stress for the Isogrid panels away from weld joints is 15,500 psi. This analysis predicts (consistent with the values reported in [3]) a stress ratio:

$$R = 6{,}188/15{,}500 = 0.3992$$

and a margin of safety,

$$MS = 1/R - 1 = 1.505.$$

Table 5-1. Summary of Isogrid Shell Peak Results

Axial Moment	-948 in-lb/in
Hoop Moment	-379 in-lb/in
Hoop Force	-1,250 lb/in
Axial Stress	-4,469 psi
Hoop Stress	-6,132 psi
von Mises	6,188 psi
Flange Stress	-6,128 psi

Panel joint peak loads represented by beam forces, moments, and stresses are given in Table 5-2. The peak stress in a longitudinal joint is 6,620 psi, while the peak circumferential stress in a ring joint is -4,976 psi.

Table 5-2. Summary of Panel Joint Peak Results

Fx Force	-5,121 lb
Fy Force	-440 lb
Mz Moment	4,011 in-lb
Sx Stress	-4,858 psi
Sz Stress	5,034 psi
Smax Stress	6,620 psi
Smin Stress	-4,976 psi

The allowable stress for panel weld joints is 8,000 psi. This analysis predicts a weld joint stress ratio:

$$R = 6{,}620/8{,}000 = 0.8275$$

and a margin of safety,

$$MS = 1/R - 1 = 0.2084.$$

References

[1] MIL-HDBK-5C, Military Standardization Handbook, Metallic Materials and Elements for Aerospace Vehicle Structures. September 15, 1976.

[2] ASME Boiler and Pressure Vessel Code, Section VIII Rules for Construction of Pressure Vessels, Division I. 1989 Edition, July 1, 1989.

[3] L.W. Swenson, Jr, "Buckling and Stress Analysis of the SDC Vacuum Shell (Task 1)", Fermilab Report, August 30, 1991.

Appendix A

This appendix contains the mechanical property sheet submitted by Astro Aluminum Treating Company, Inc. showing several property values versus heat treatment conditions. The minimum tensile strength value in the "0" temper condition (32,000 psi) was used to determine the allowable stress in the panel weld joints. Note that the allowable weld joint stress (8,000 psi) is about half the allowable stress for the material in a T851 temper condition.

3.2.1 Mechanical properties of material as supplied. The mechanical properties perpendicular to the direction of final rolling, except for material less than 9 inches in width, shall conform to the requirements of table II for the temper specified. For material less than 9 inches in width, the mechanical properties parallel to the direction of final rolling shall conform to the requirements of table II for the temper specified.

TABLE II. Mechanical properties

Temper	Thickness, inches	Tensile strength, minimum, ksi	Yield strength at 0.2 percent offset, minimum, ksi	Elongation in 2 inches [1/] or 4 times D [2/], minimum, percent
O	0.020 - 2.000	32.0 (max)	16.0 (max)	12
T31	0.020 - 0.039	46.0	29.0	8
	0.040 - 0.249	46.0	28.0	10
T351	0.250 - 2.000	46.0	28.0	10
	2.001 - 3.000	44.0	28.0	10
	3.001 - 4.000	42.0	27.0	9
	4.001 - 5.000	40.0	26.0	9
	5.001 - 6.000	39.0	25.0	8
T37	0.020 - 0.039	49.0	38.0	6
	0.040 - 2.500	49.0	37.0	6
	2.501 - 3.000	47.0	36.0	6
	3.001 - 4.000	45.0	35.0	5
	4.001 - 5.000	43.0	34.0	4
T62 [3/]	0.020 - 0.039	54.0	36.0	6
	0.040 - 0.249	54.0	36.0	7
	0.250 - 1.000	54.0	36.0	8
	1.001 - 2.000	54.0	36.0	7
T81	0.020 - 0.039	62.0	46.0	6
	0.040 - 0.249	62.0	46.0	7
T851	0.250 - 1.000	62.0	46.0	8
	1.001 - 2.000	62.0	46.0	7
	2.001 - 3.000	62.0	45.0	6
	3.001 - 4.000	60.0	44.0	5
	4.001 - 5.000	59.0	43.0	5
	5.001 - 6.000	57.0	42.0	4

TABLE II. Mechanical properties - Continued

Temper	Thickness, inches	Tensile strength, minimum, ksi	Yield strength at 0.2 percent offset, minimum, ksi,	Elongation in 2 inches 1/ or 4 times D 2/, minimum, percent
T87	0.020 - 0.039	64.0	52.0	5
T87	0.040 - 0.249	64.0	52.0	6
	0.250 - 1.000	64.0	51.0	7
	1.001 - 3.000	64.0	51.0	6
	3.001 - 4.000	62.0	50.0	4
	4.001 - 5.000	61.0	49.0	3
F	All	4/	4/	4/

1/ Not required for material 1/2 inch or less in width
2/ D represents specimen diameter
3/ Material in the T62 temper is a user heat-treated condition and is not available from the material producer
4/ No requirements

3.2.2 Mechanical properties after heat treatment. In addition to conforming to the requirements of 3.2.1, material in the tempers identified in the following paragraphs shall, after having been processed to tempers also identified therein, have properties conforming to those specified in table II, as applicable.

3.2.2.1 Material in the annealed (O) and as-fabricated (F) tempers. Material in the O or F tempers, without the subsequent imposition of cold work or forming operations, shall, after proper solution and artificial aging treatments, develop the properties specified for the T62 temper (see 6.4).

3.2.2.2 Material in the T31, T351, T81 and T851 tempers. Material in the T31, T351, T81 and T851 tempers shall, without the subsequent imposition of cold work or forming operations, be heat treatable to the properties specified for the T62 temper. Such capability shall be demonstrated when specified (see 6.2 and 6.4).

3.2.2.3 Material in the T31, T351 and T37 tempers. Material in the T31, T351 and T37 tempers shall be heat treatable to the properties specified for the T81, T851 and T87 tempers, respectively. Such capability shall be demonstrated when specified (see 6.2).

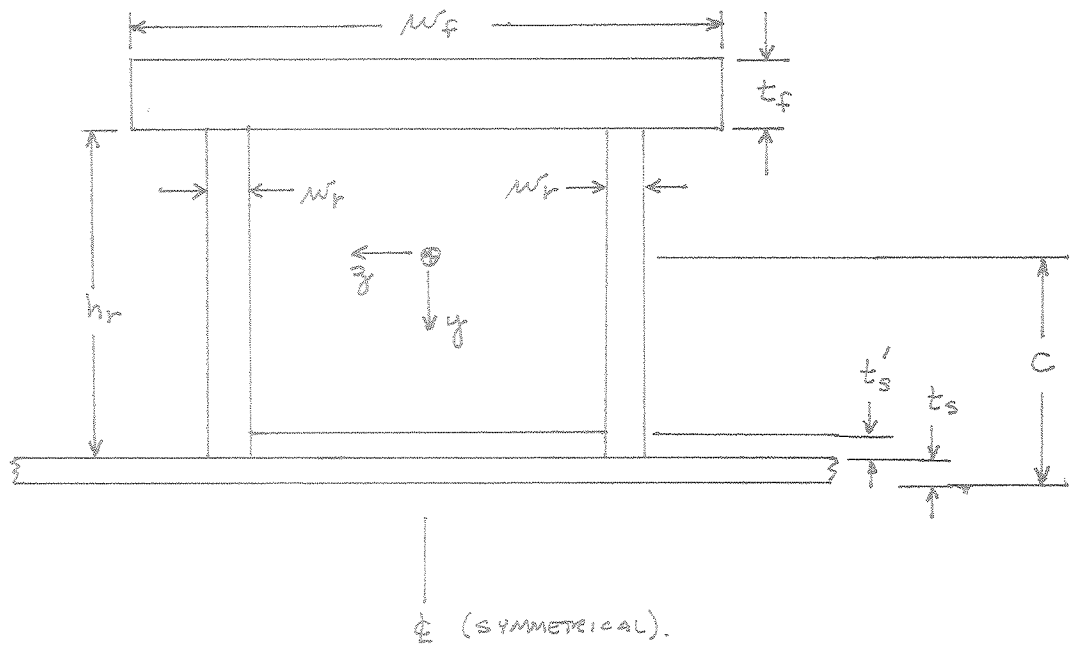

Figure 2.1 Panel Joint Cross Section

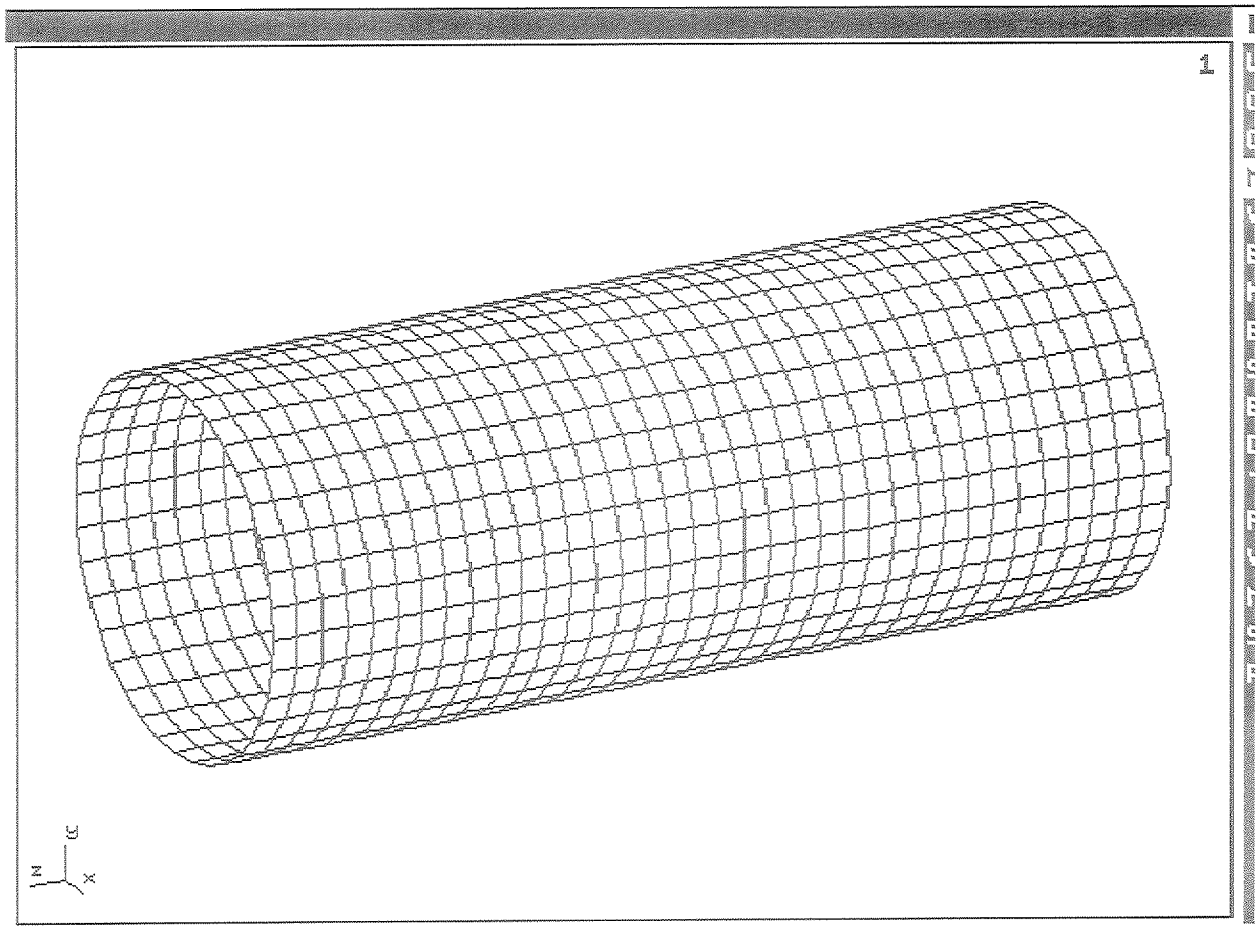

Figure 2.2 Vacuum Shell Finite Element Model

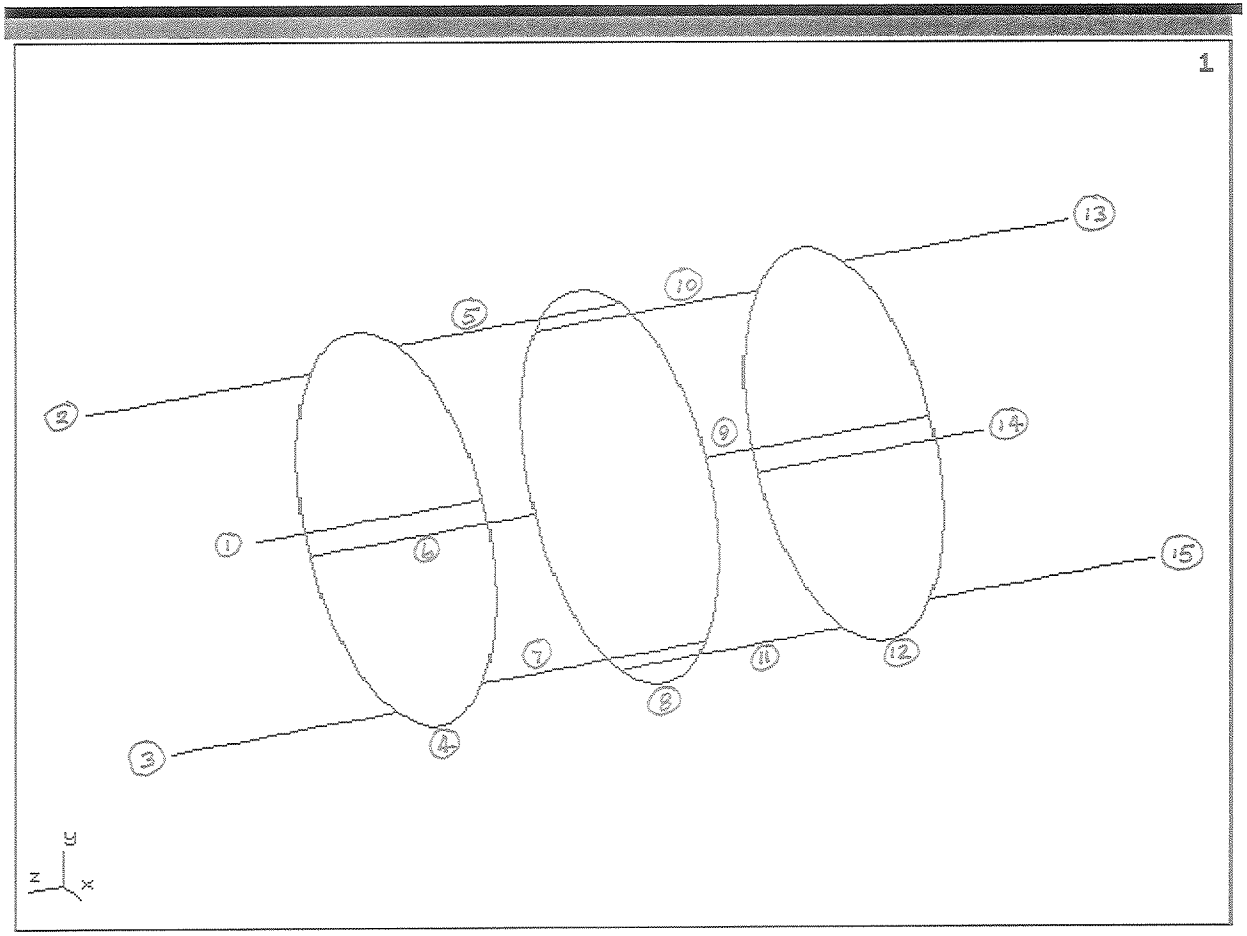

Figure 2.3 Panel Weld Joint Beam Model

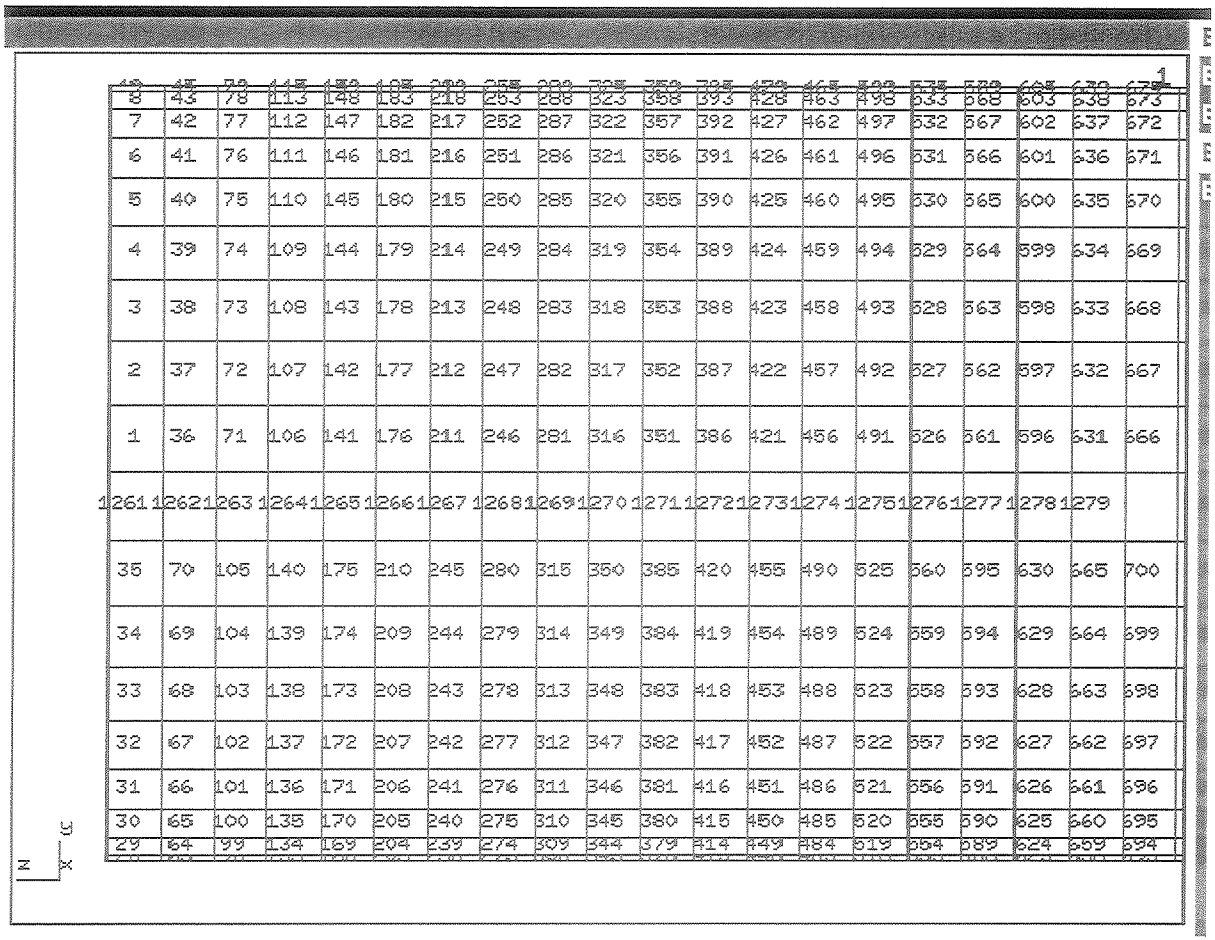

Figure 2.4(a) Vacuum Shell Element Numbers (Left End)

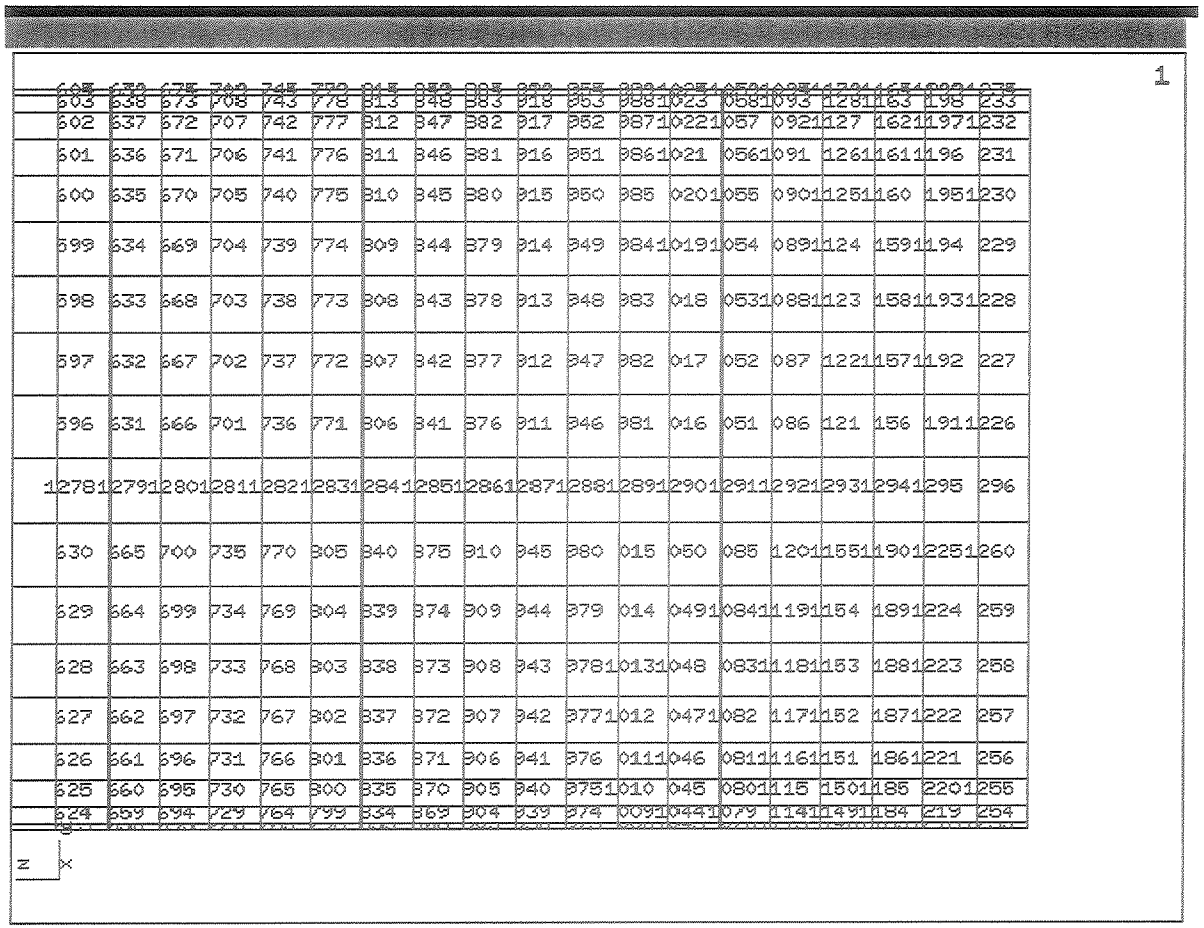

Figure 2.4(b) Vacuum Shell Element Numbers (Right End)

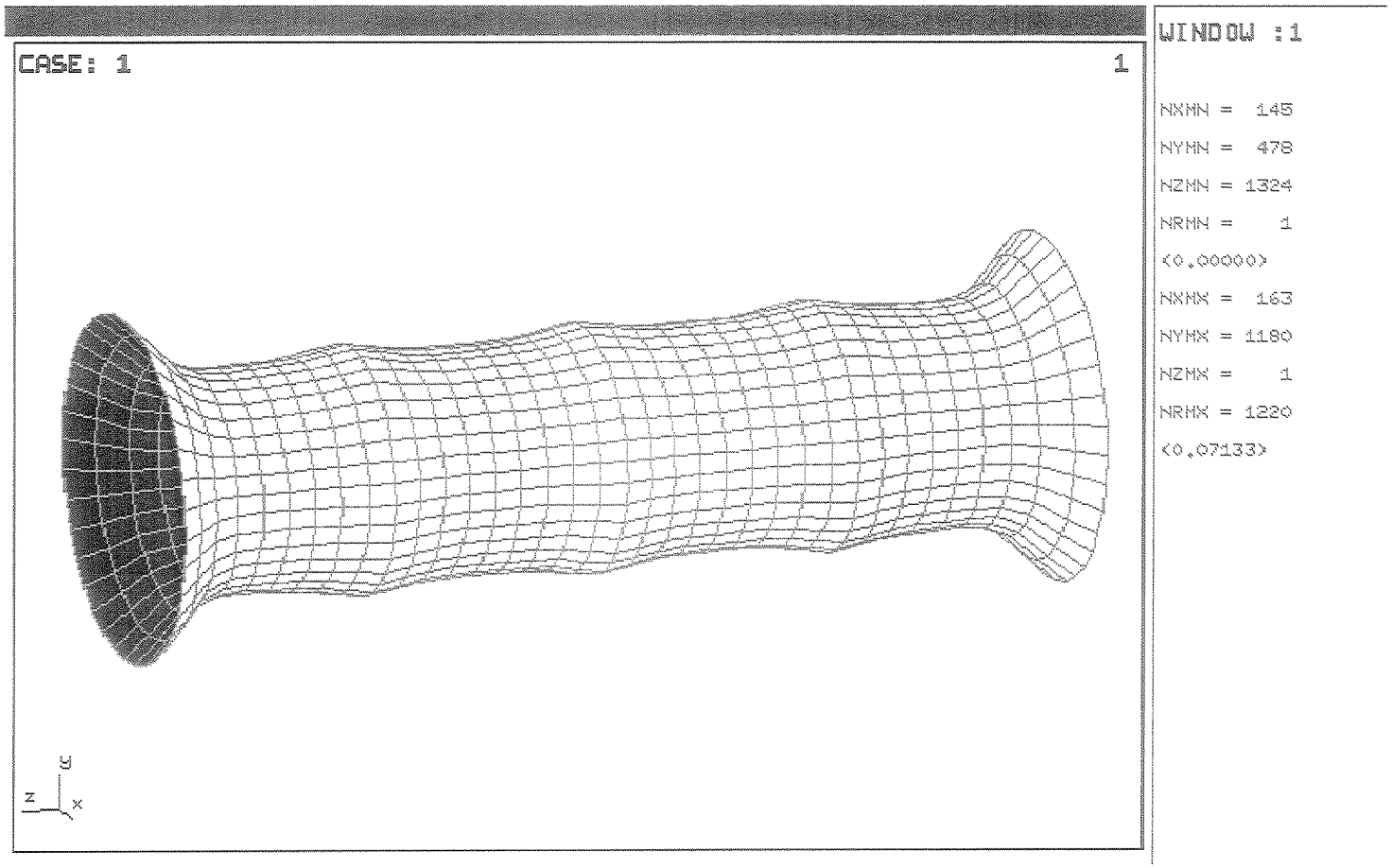

Figure 3.1 Deformation of the SDC Vacuum Shell

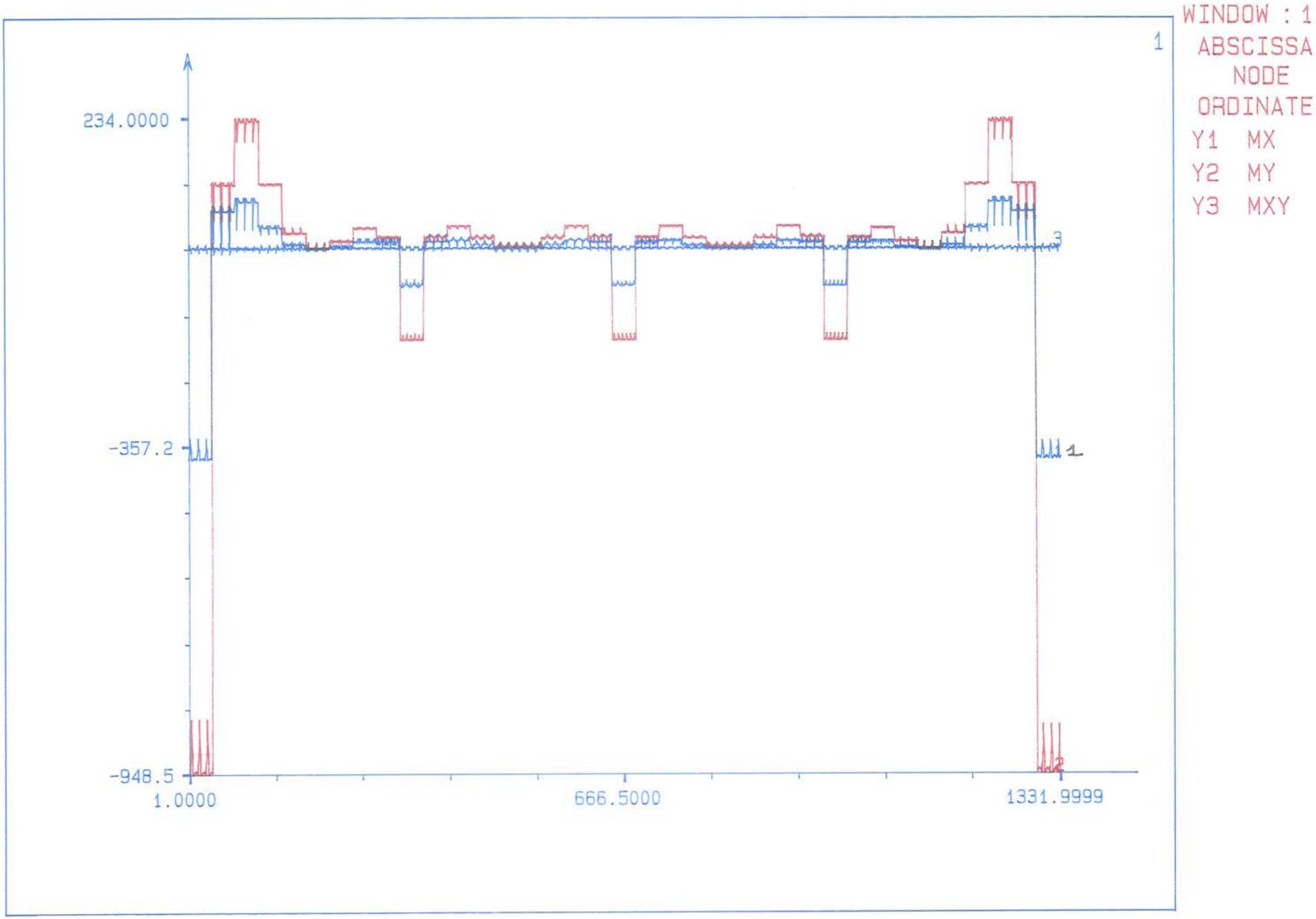

Figure 3.2 Isogrid Internal Moment Resultants vs. Node Numbers

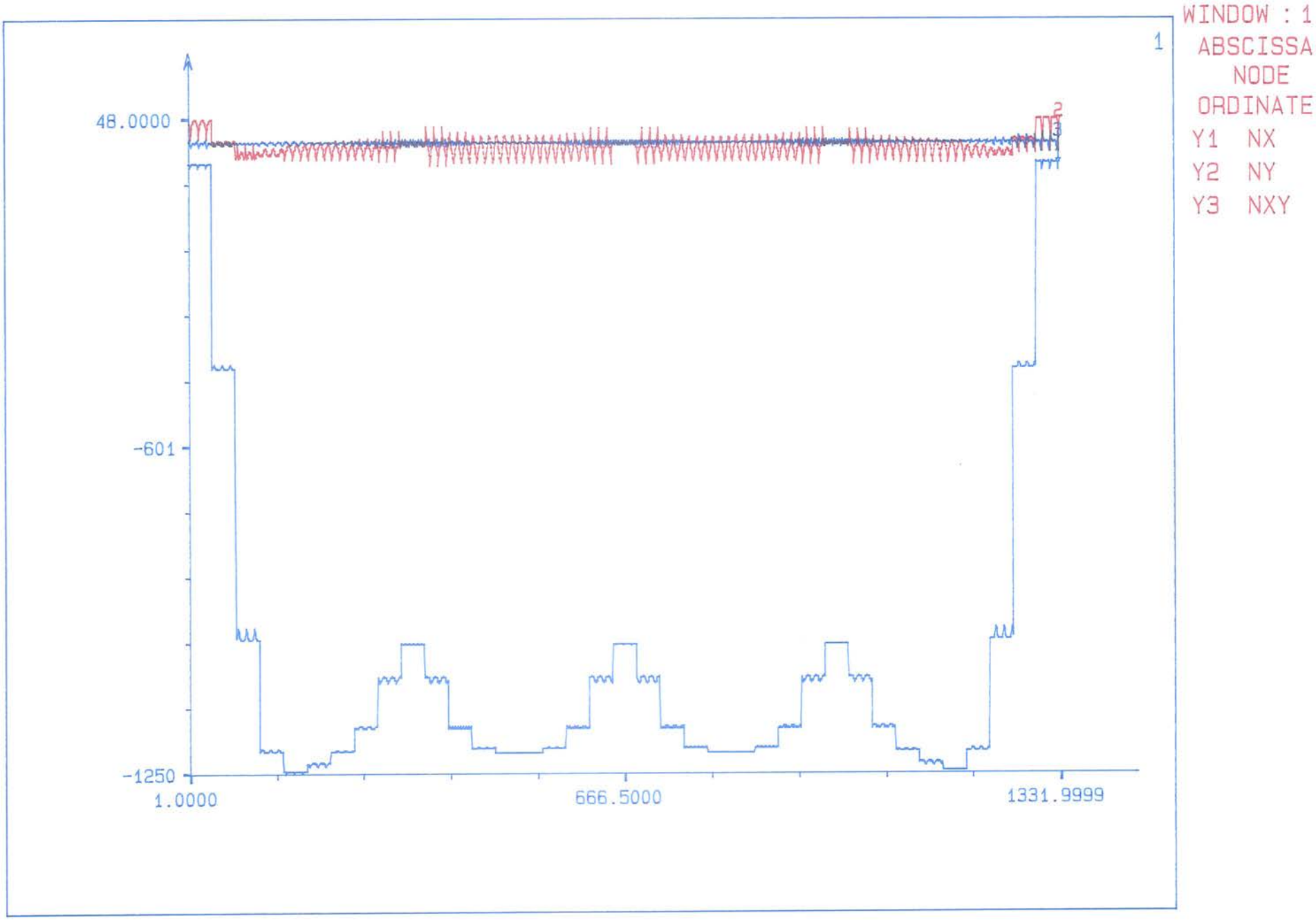

Figure 3.3 Isogrid Internal Force Resultants vs. Node Numbers

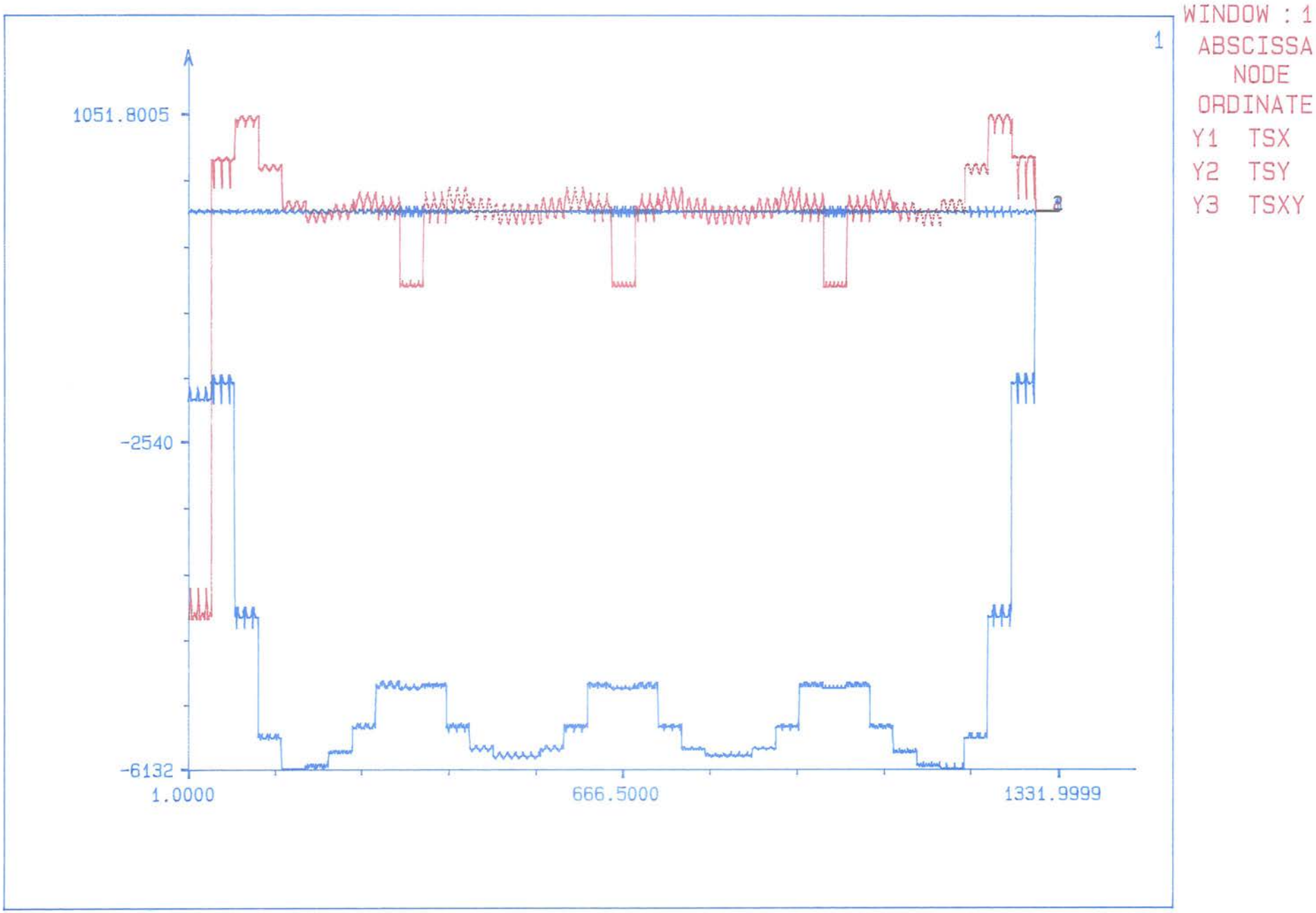

Figure 3.4 Isogrid Skin Stress Components vs. Node Numbers

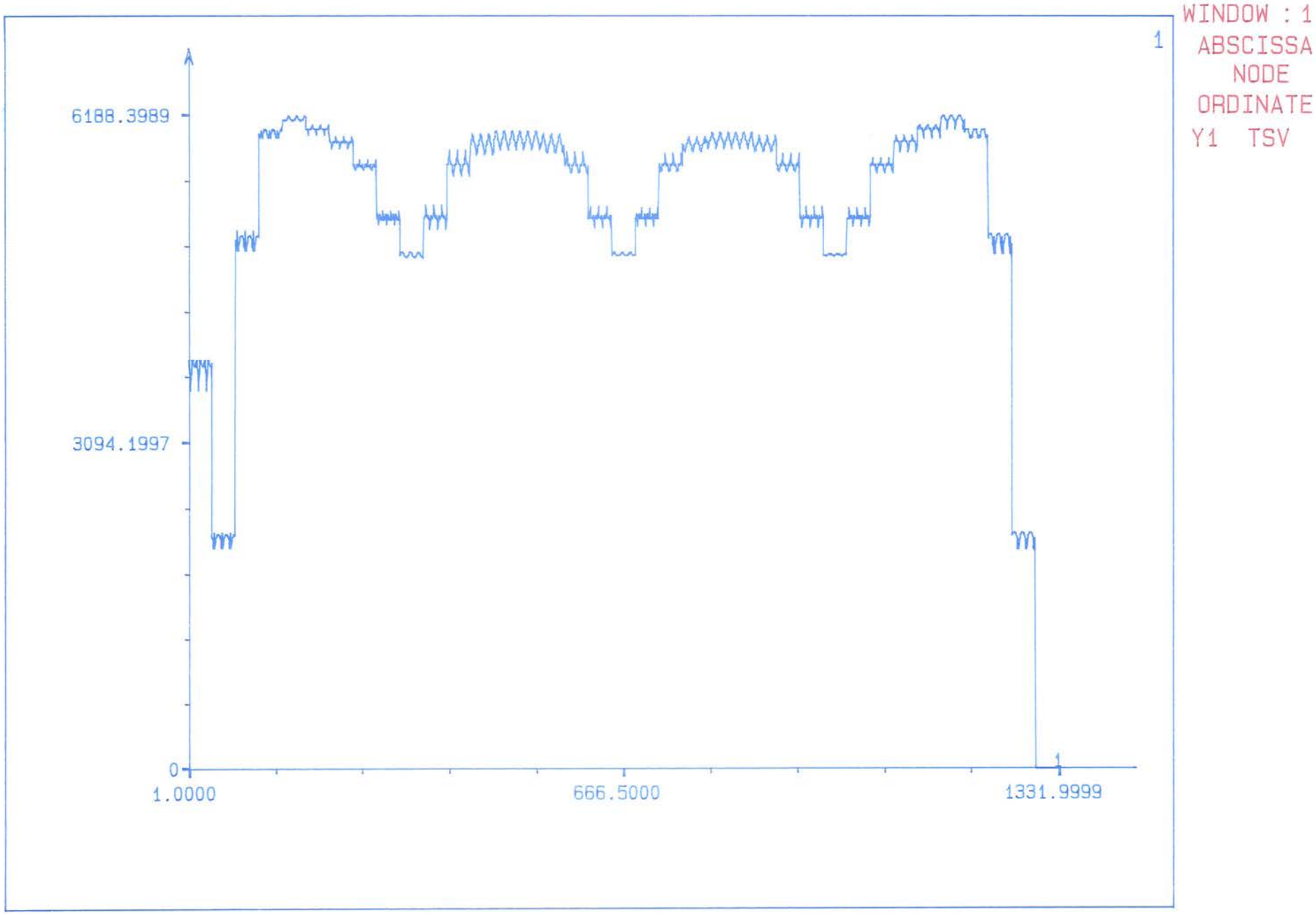

Figure 3.5 Isogrid von Mises Stress vs. Node Numbers

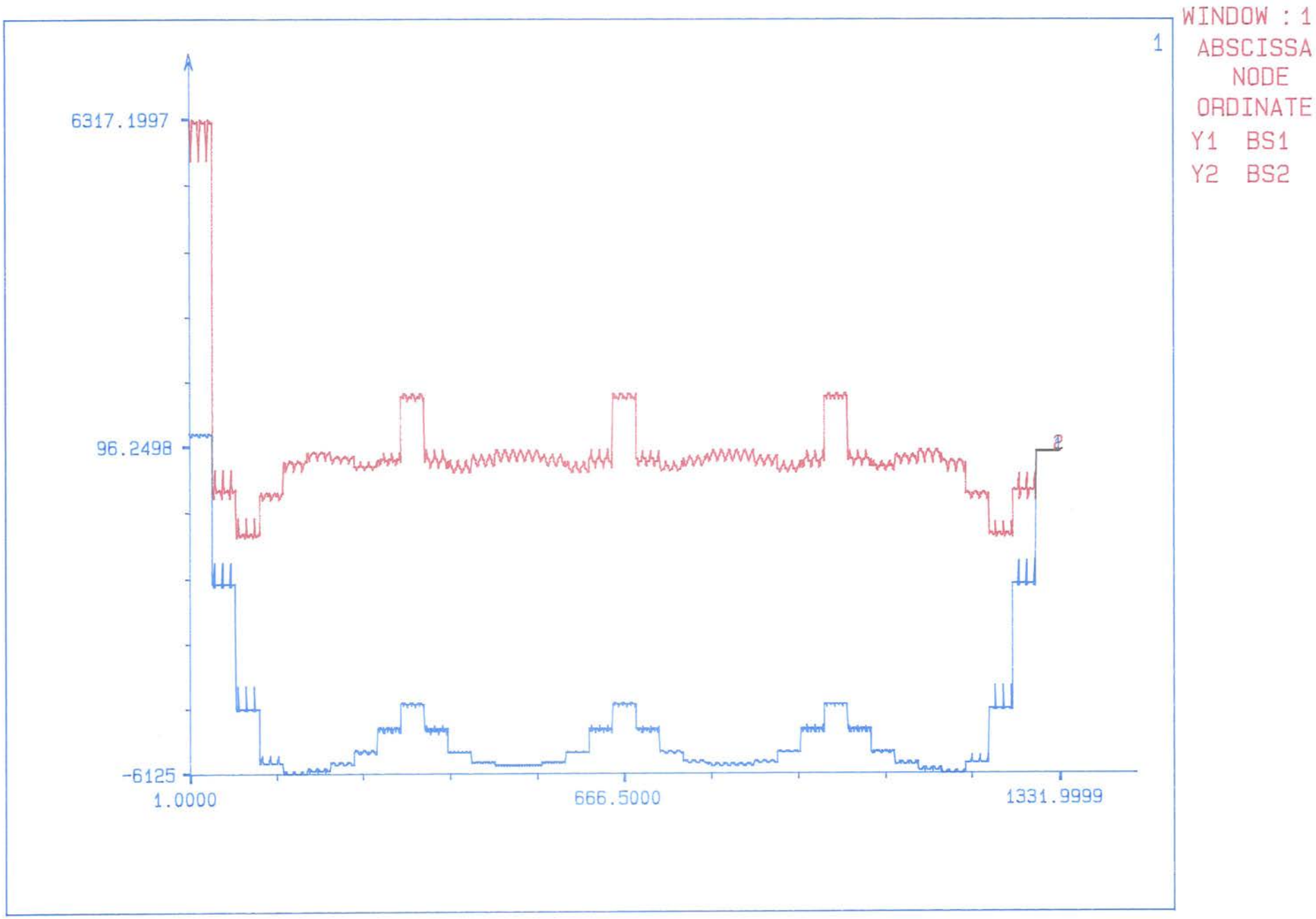

Figure 3.6 Isogrid Flange Stresses vs. Node Numbers

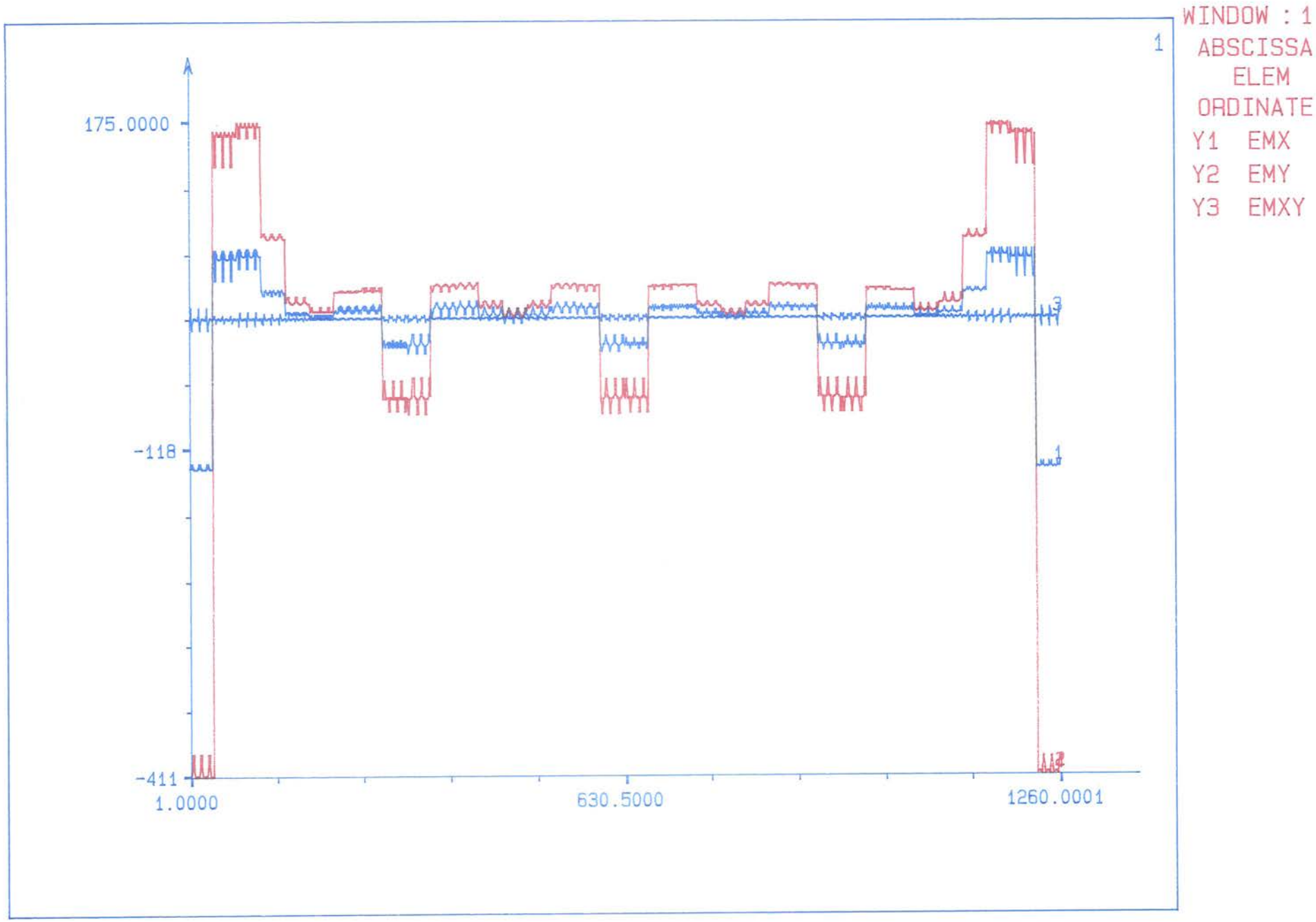

Figure 3.7 Isogrid Internal Moment Resultants vs. Element Numbers

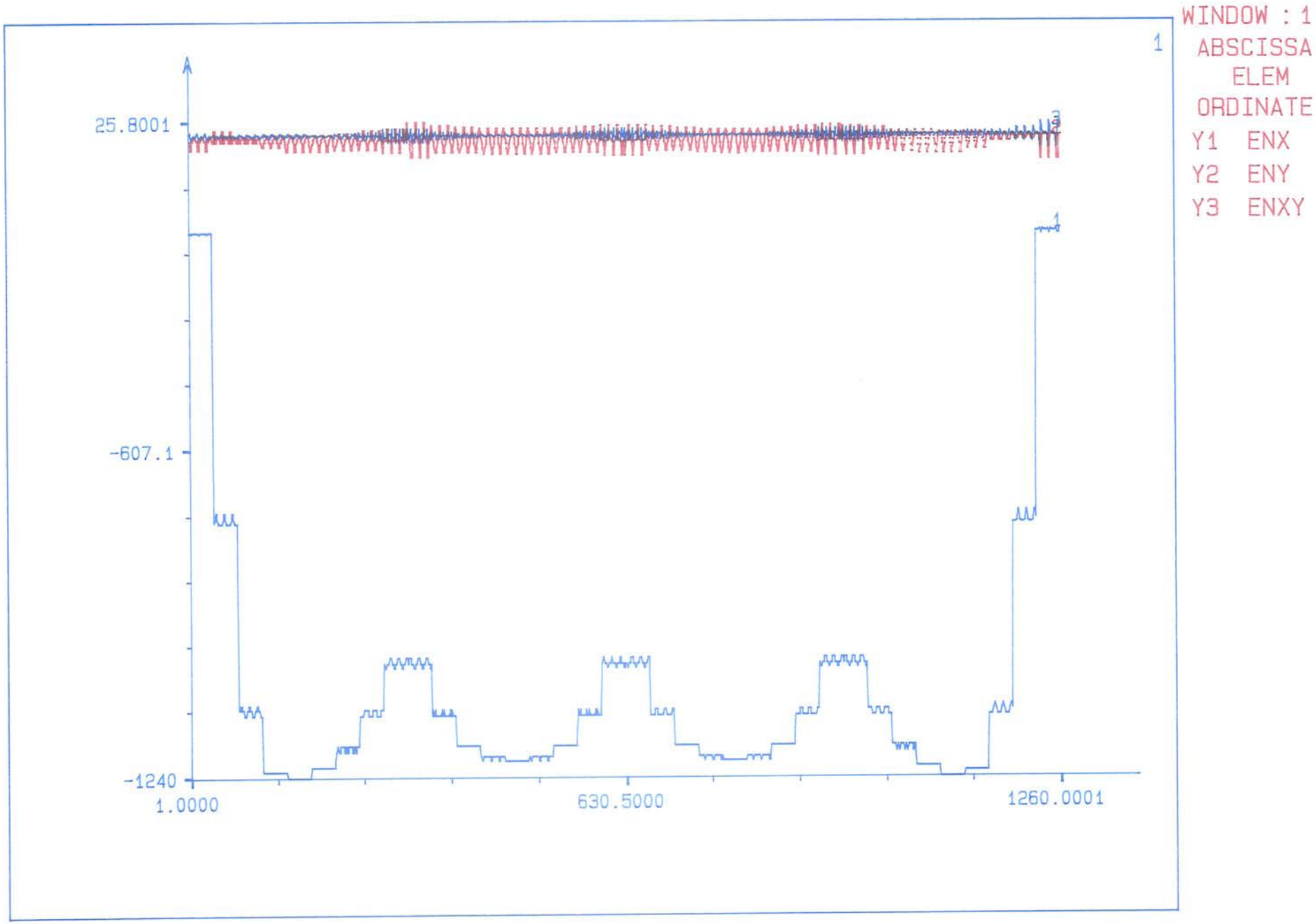

Figure 3.8 Isogrid Internal Force Resultants vs. Element Numbers

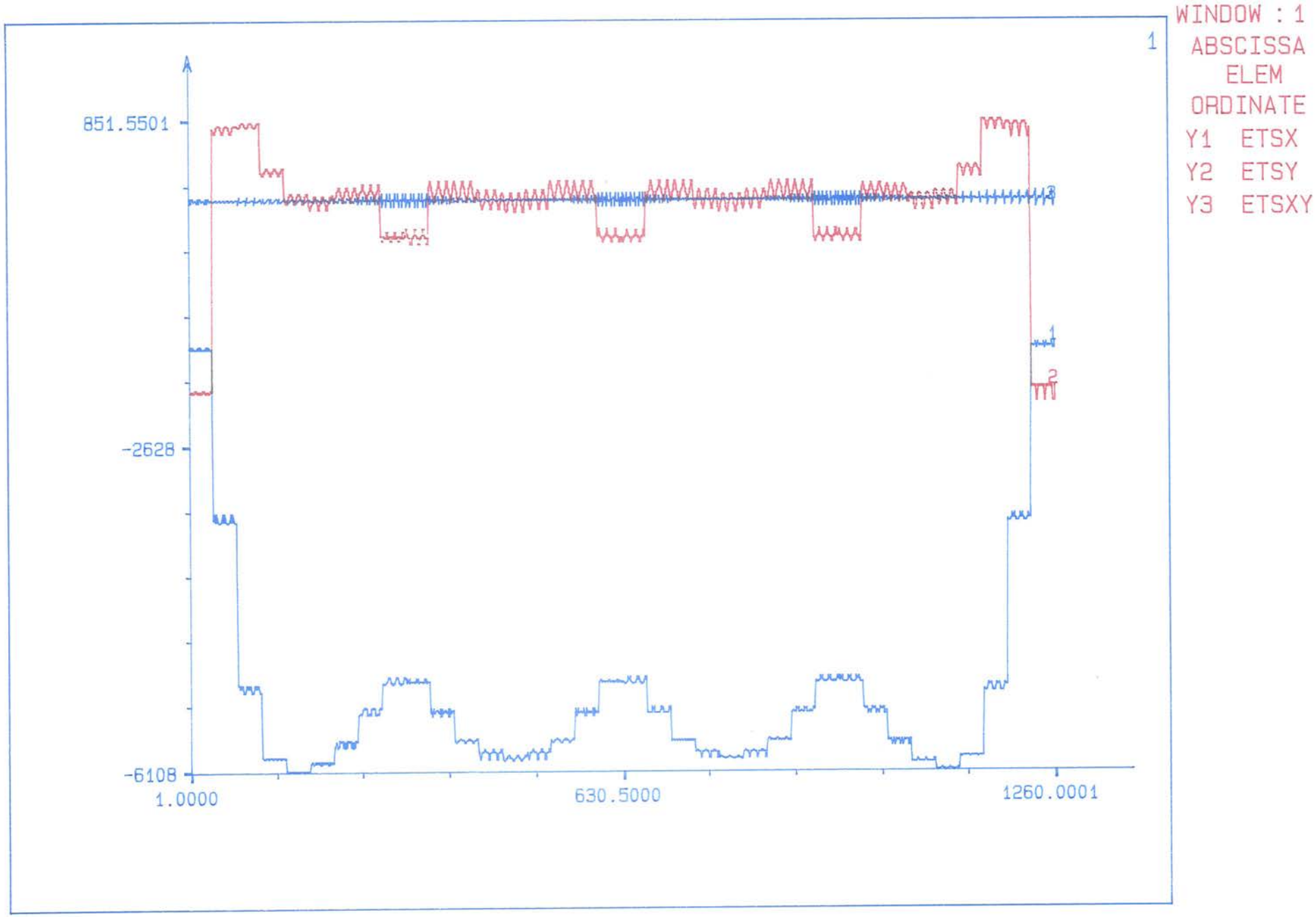

Figure 3.9 Isogrid Skin Stress Components vs. Element Numbers

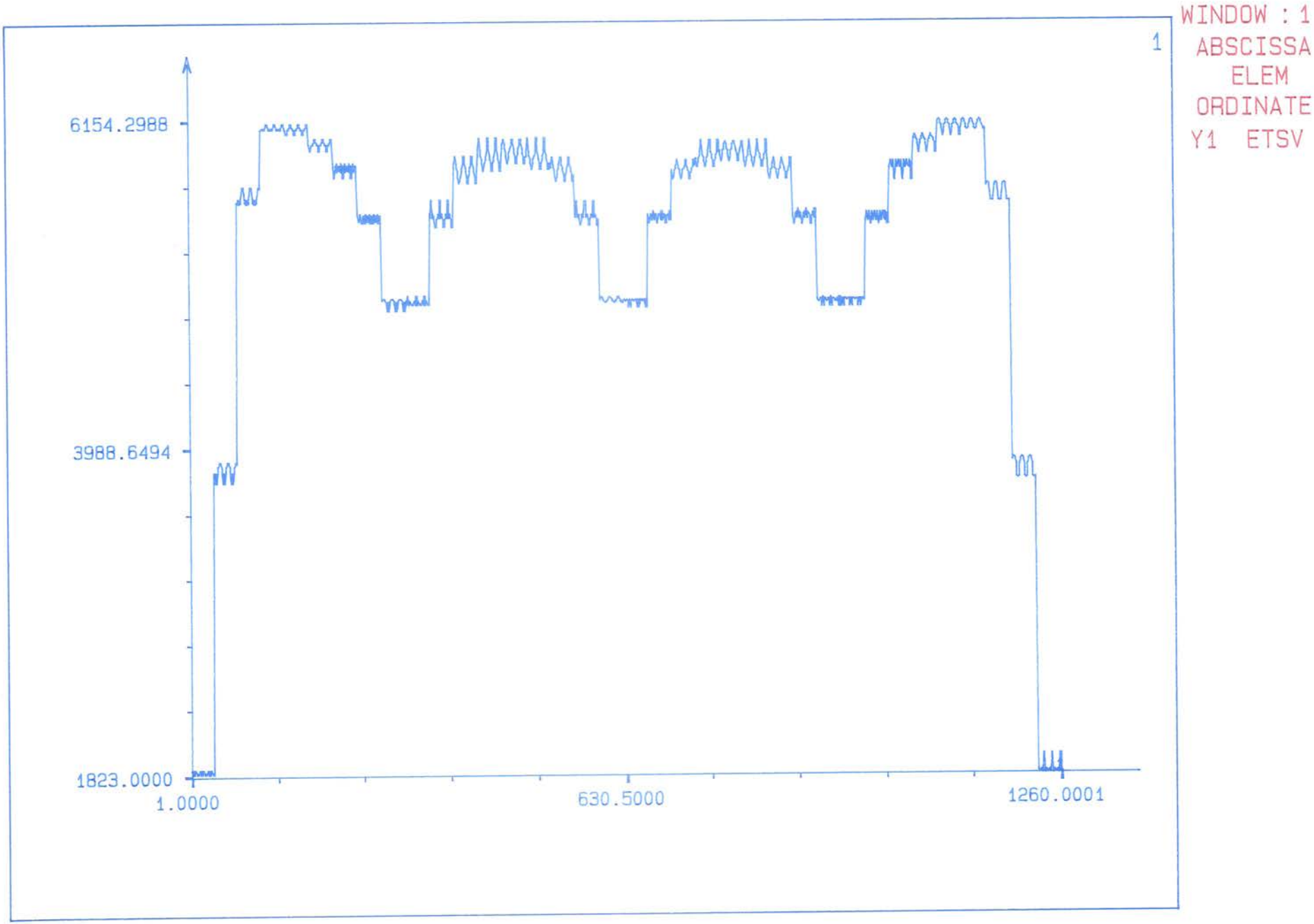

Figure 3.10 Isogrid von Mises Stress vs. Element Numbers

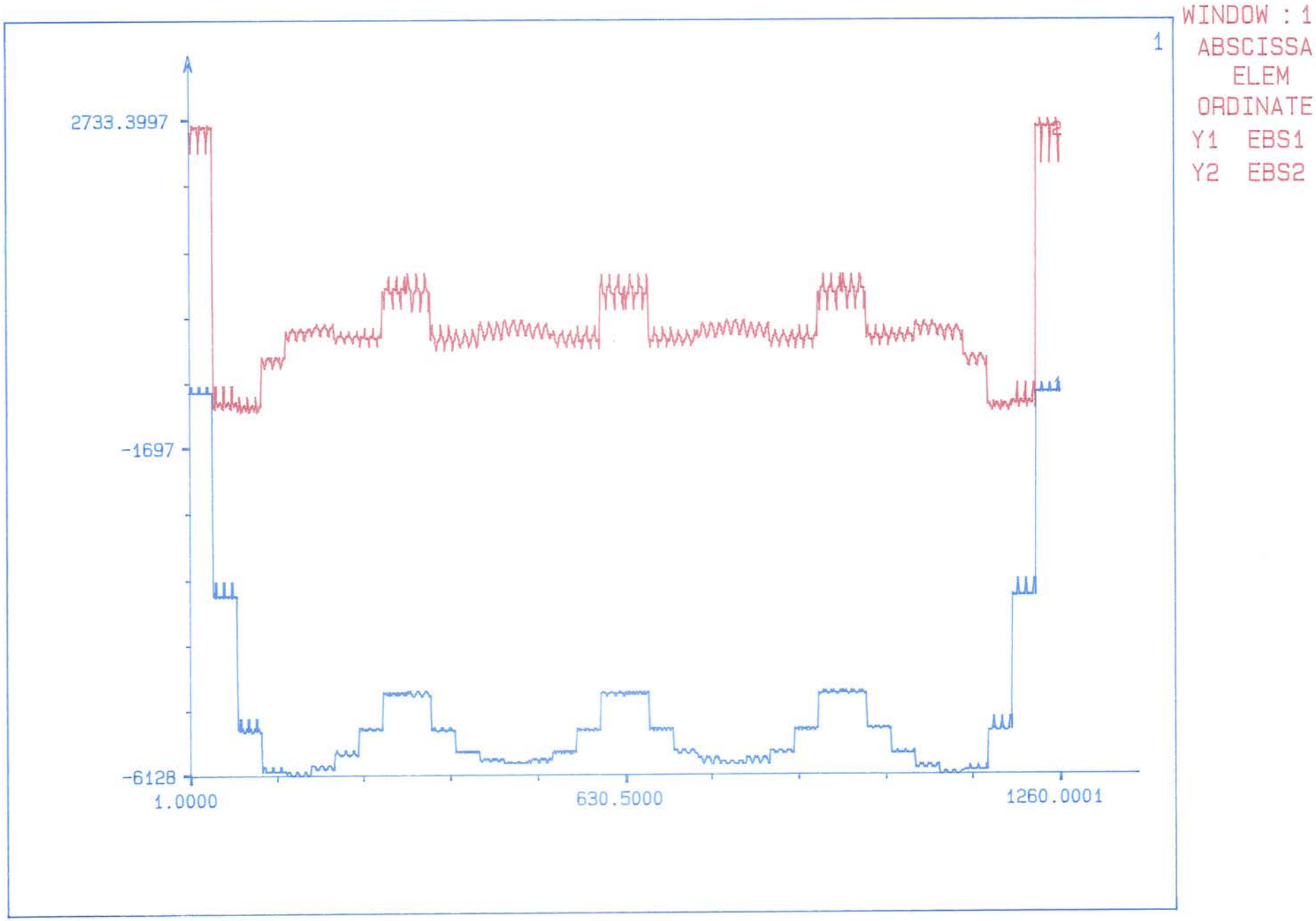

Figure 3.11 Isogrid Flange Stresses vs. Element Numbers

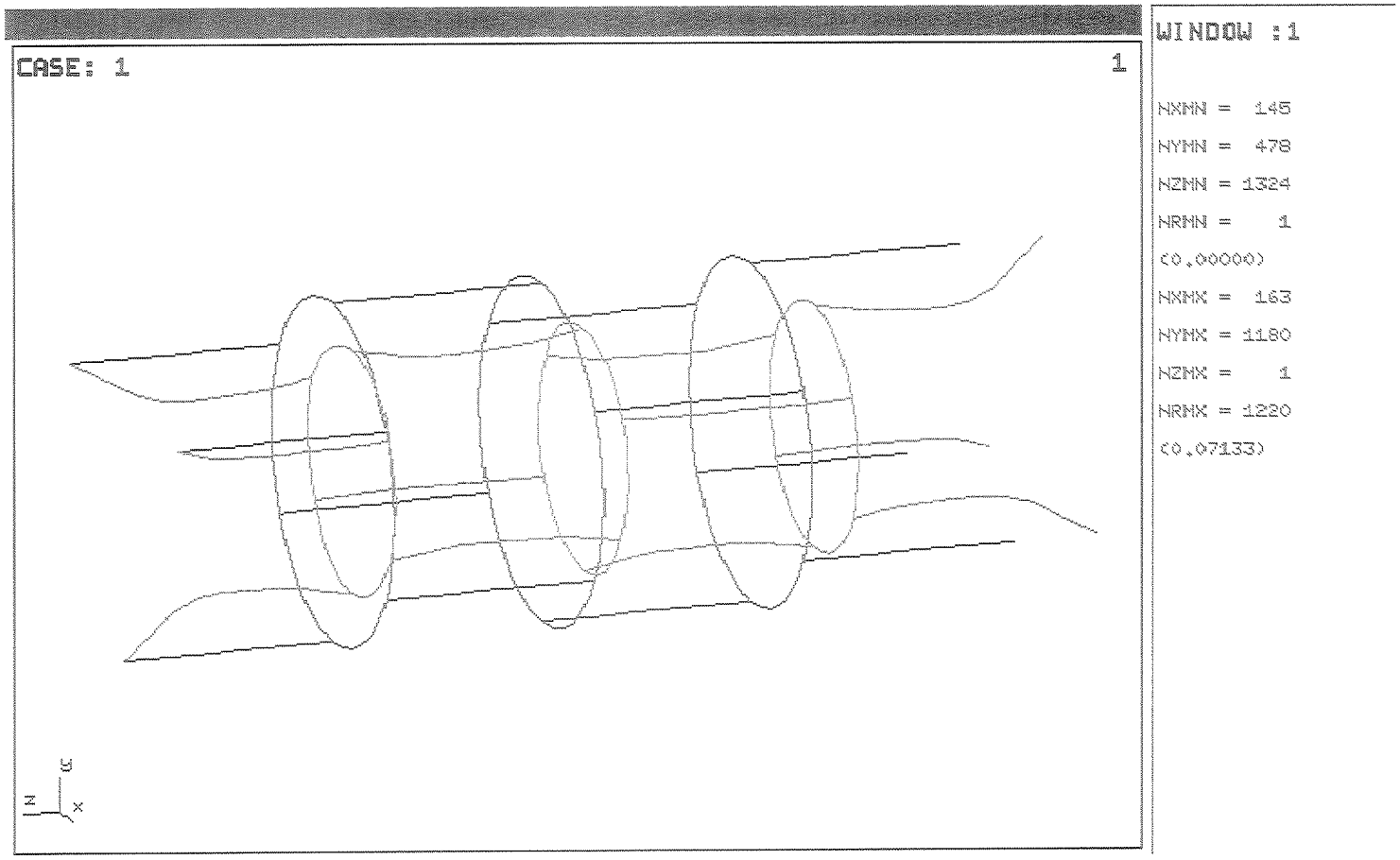

Figure 4.1 Deformation of the Panel Joint Beam Model

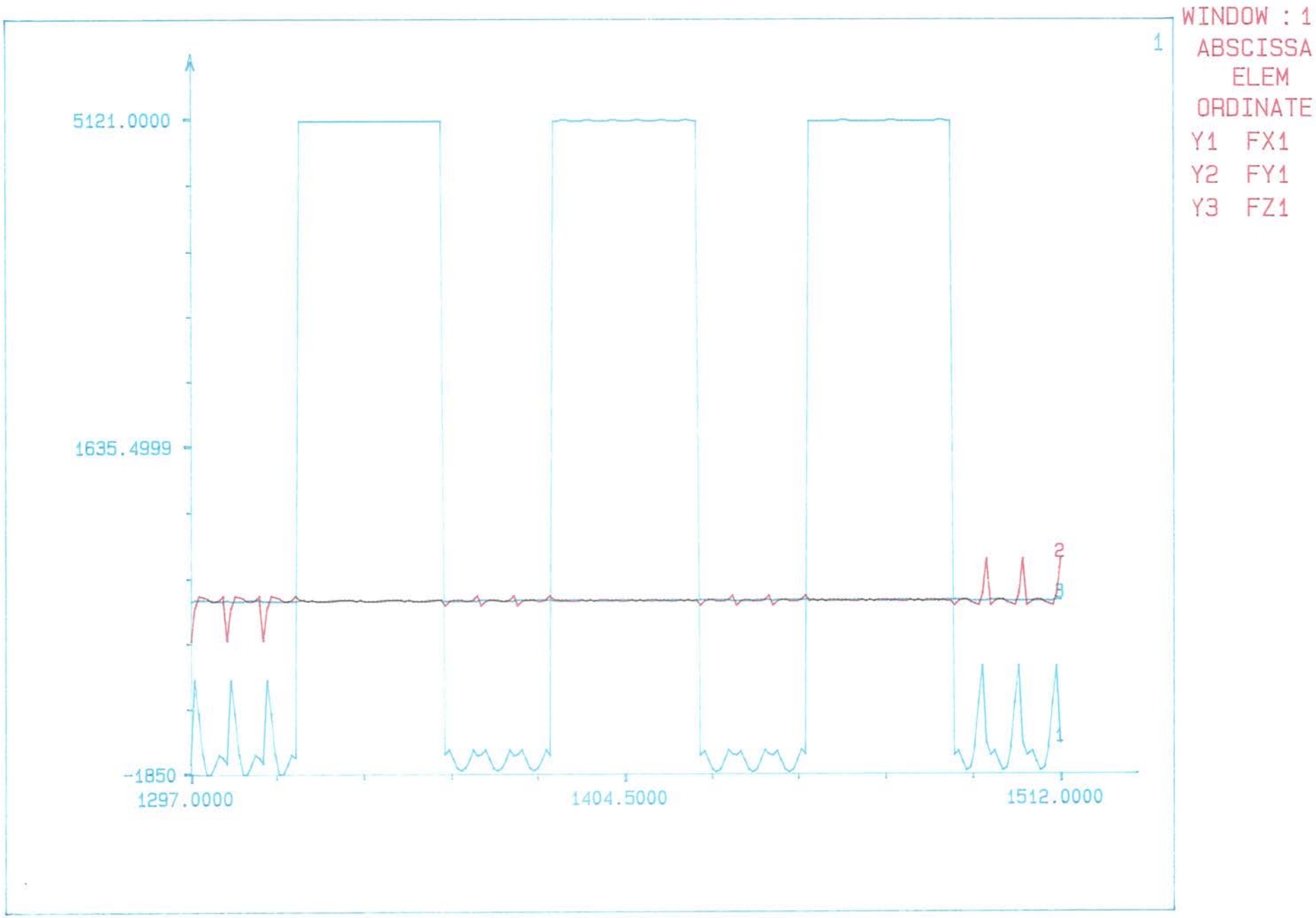

Figure 4.2 Panel Joint Beam Forces (End-1) vs. Element Numbers

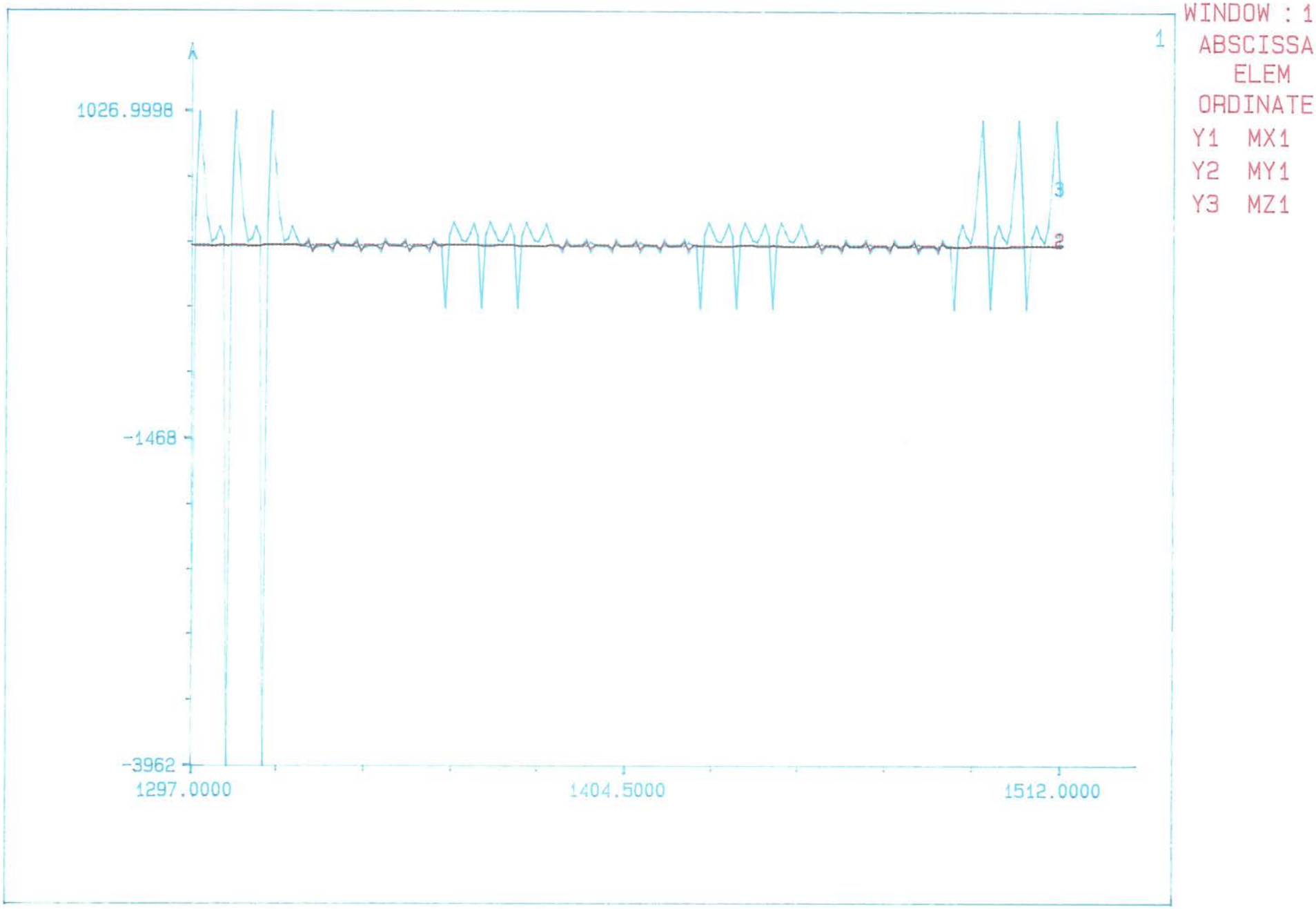

Figure 4.3 Panel Joint Beam Moments (End 1) vs. Element Numbers

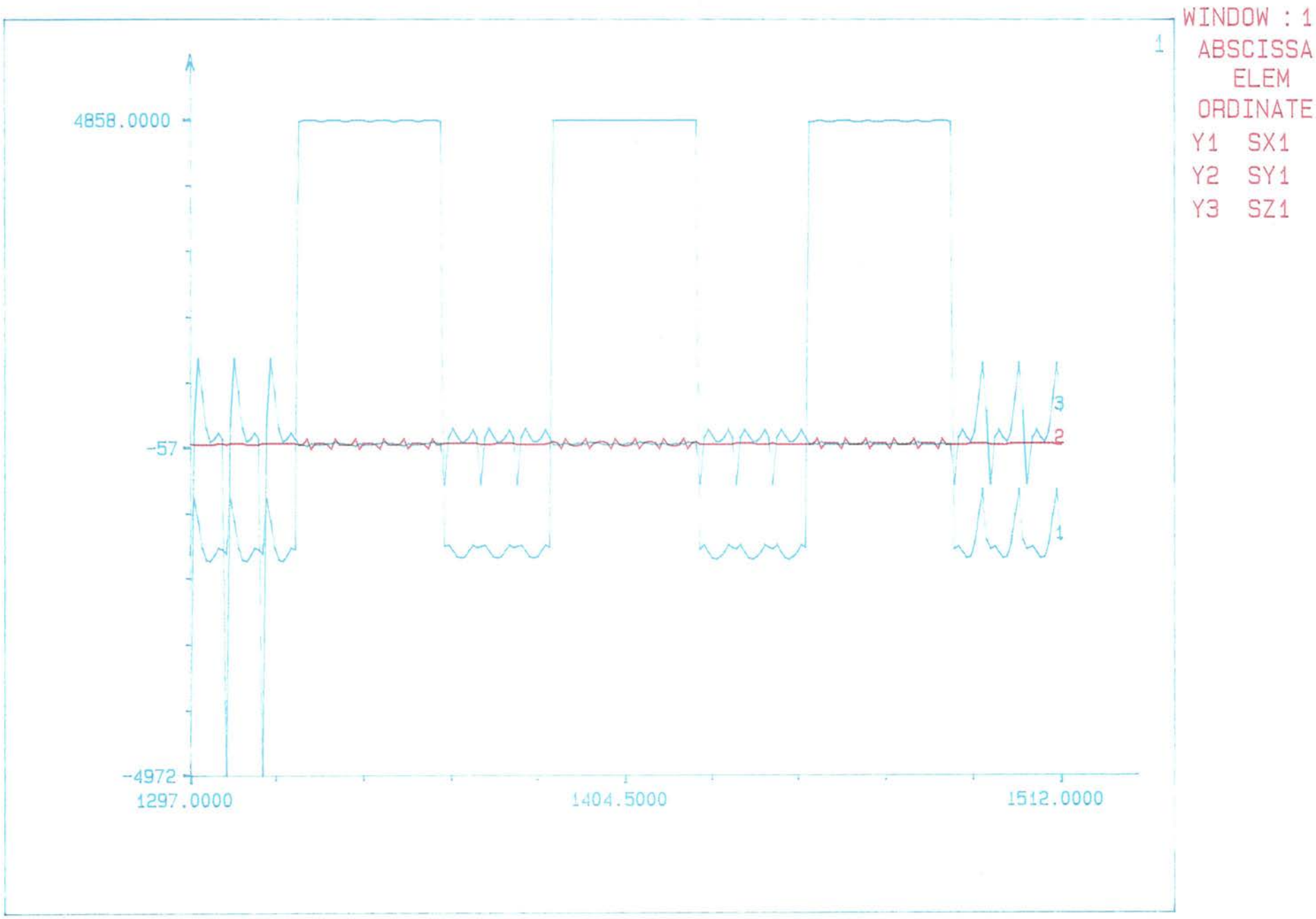

Figure 4.4 Panel Joint Beam Stresses (End 1) vs. Element Numbers

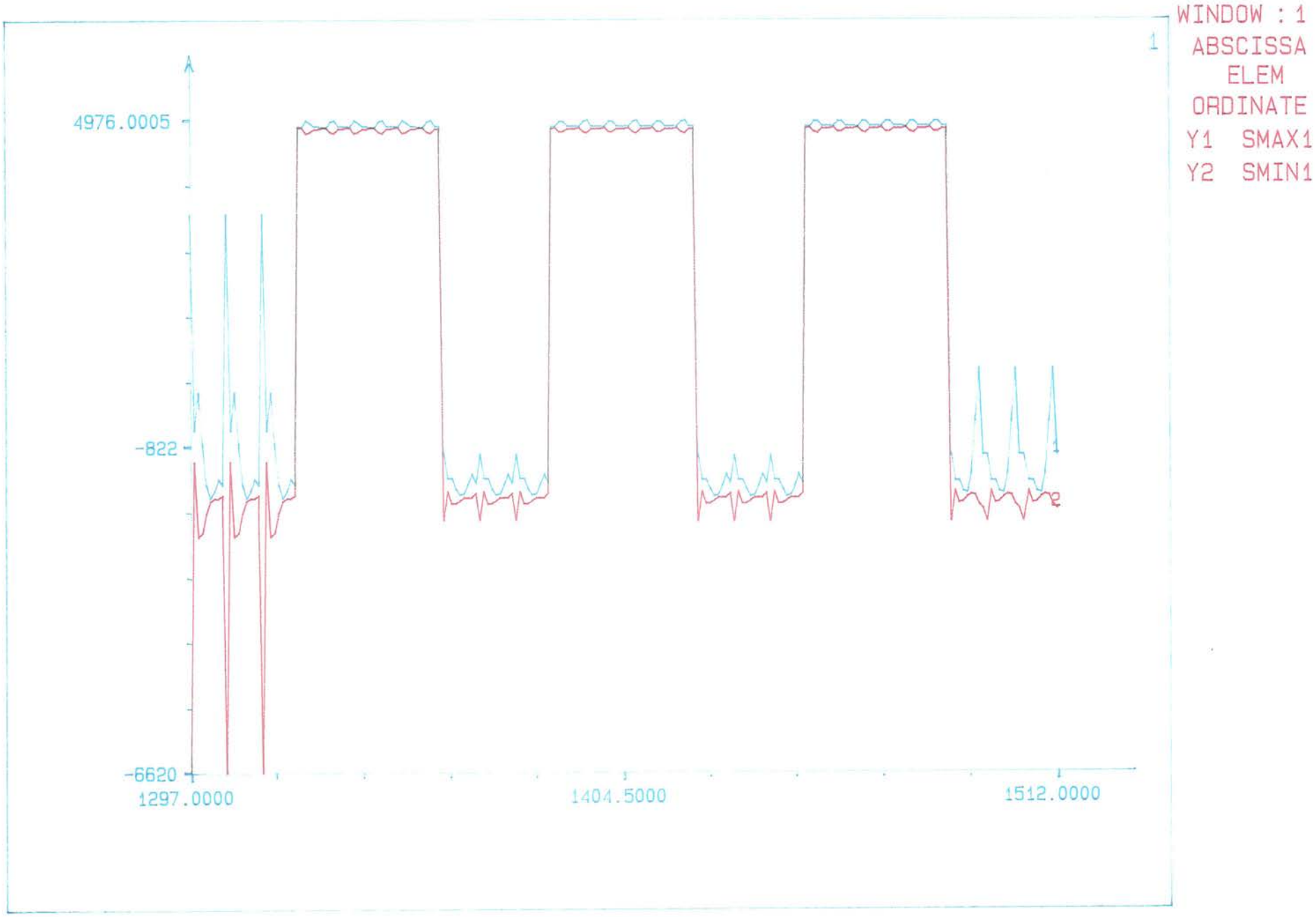

Figure 4.5 Panel Joint Beam Principal Stresses (End 1) vs. Element Numbers

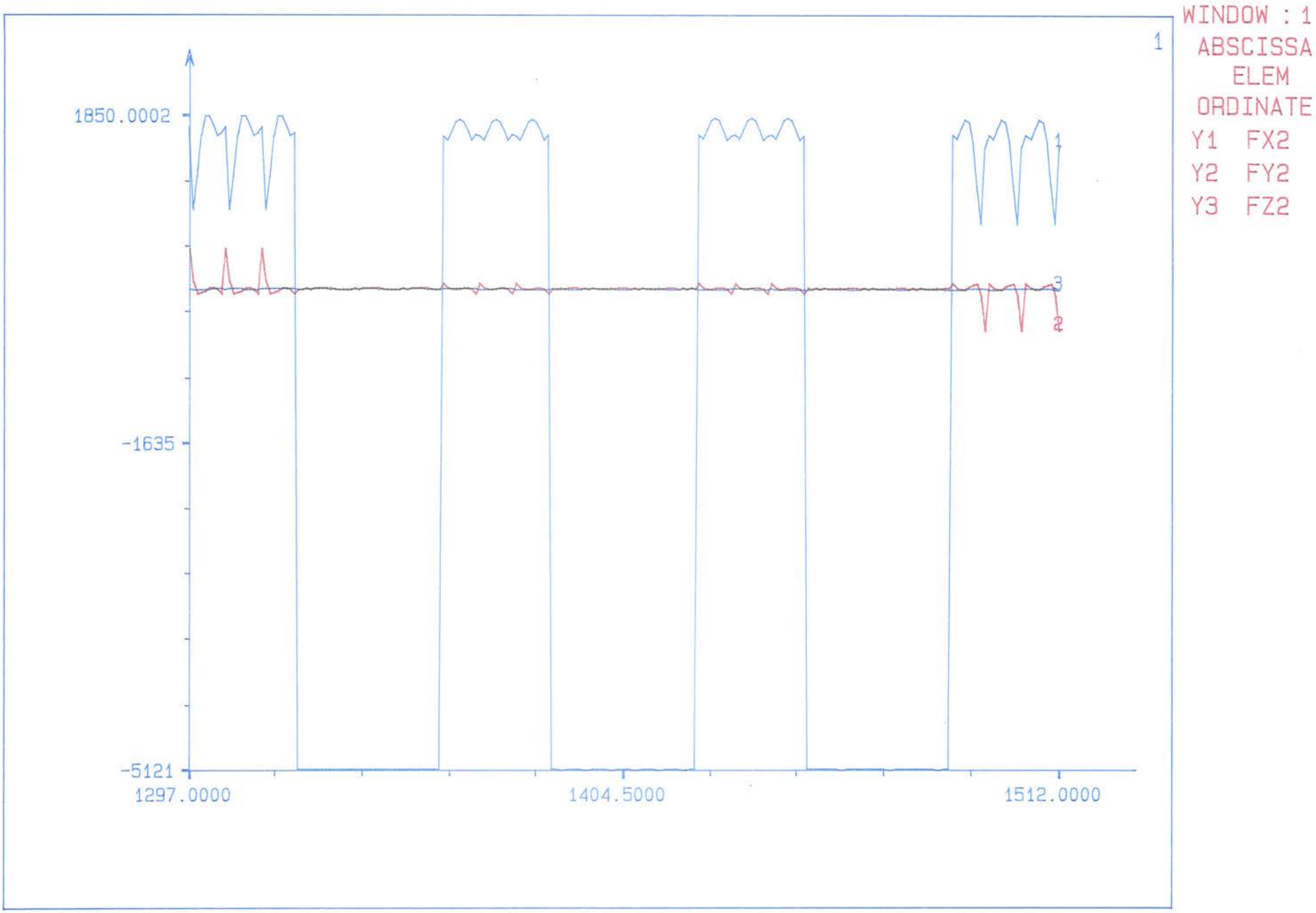

Figure 4.6 Panel Joint Beam Forces (End-2) vs. Element Numbers

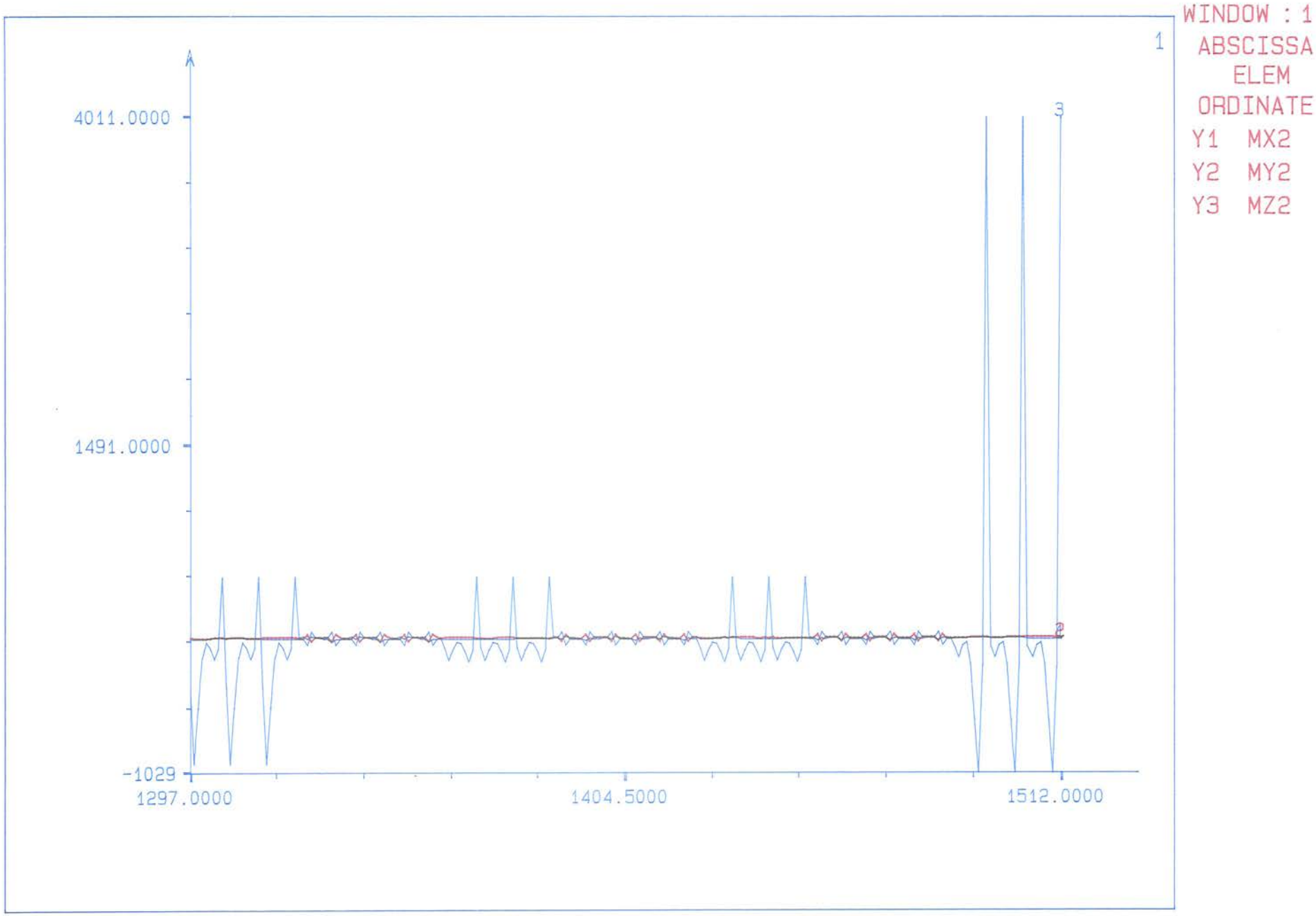

Figure 4.7 Panel Joint Beam Moments (End-2) vs. Element Numbers

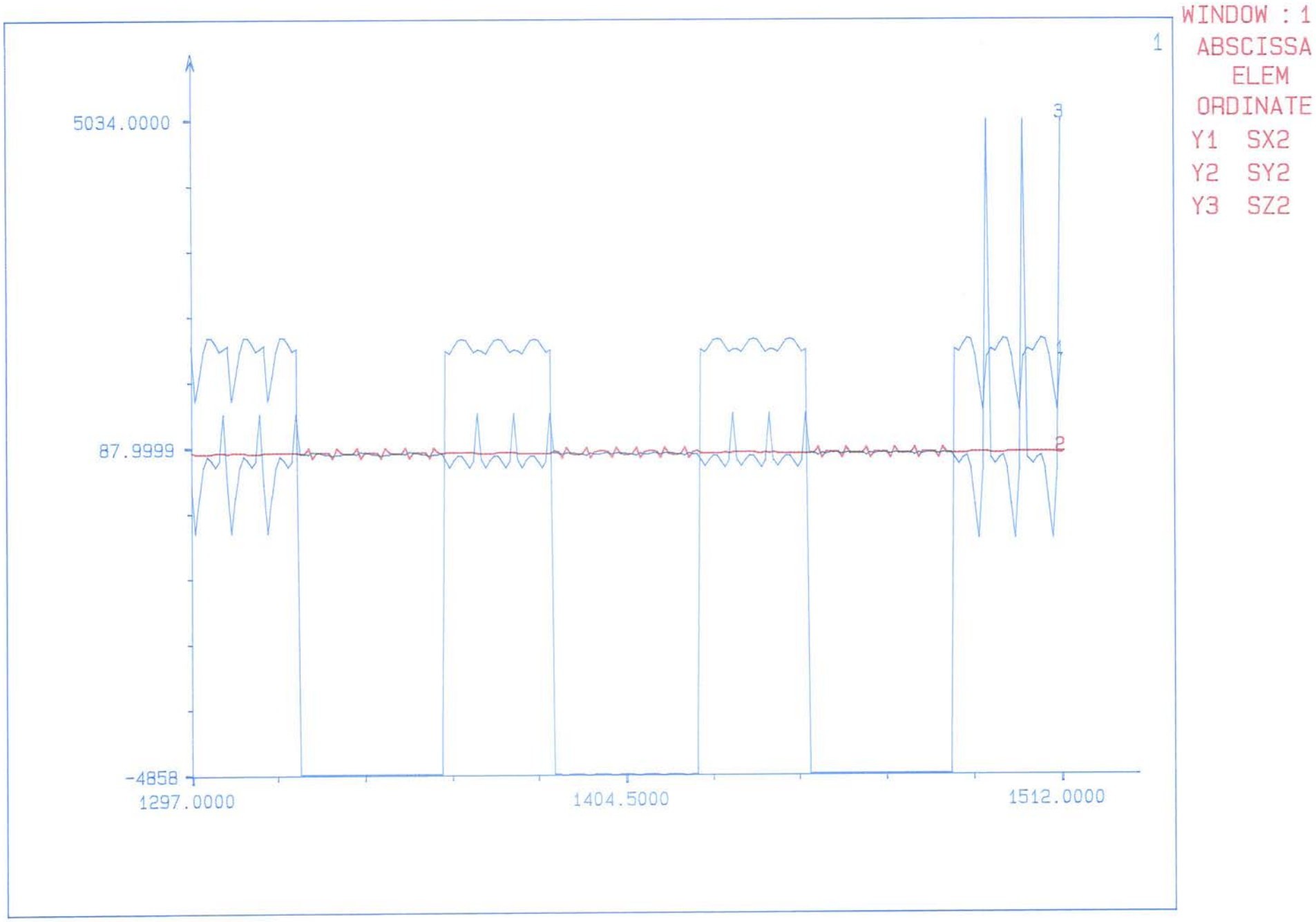

Figure 4.8 Panel Joint Beam Stresses (End-2) vs. Element Numbers

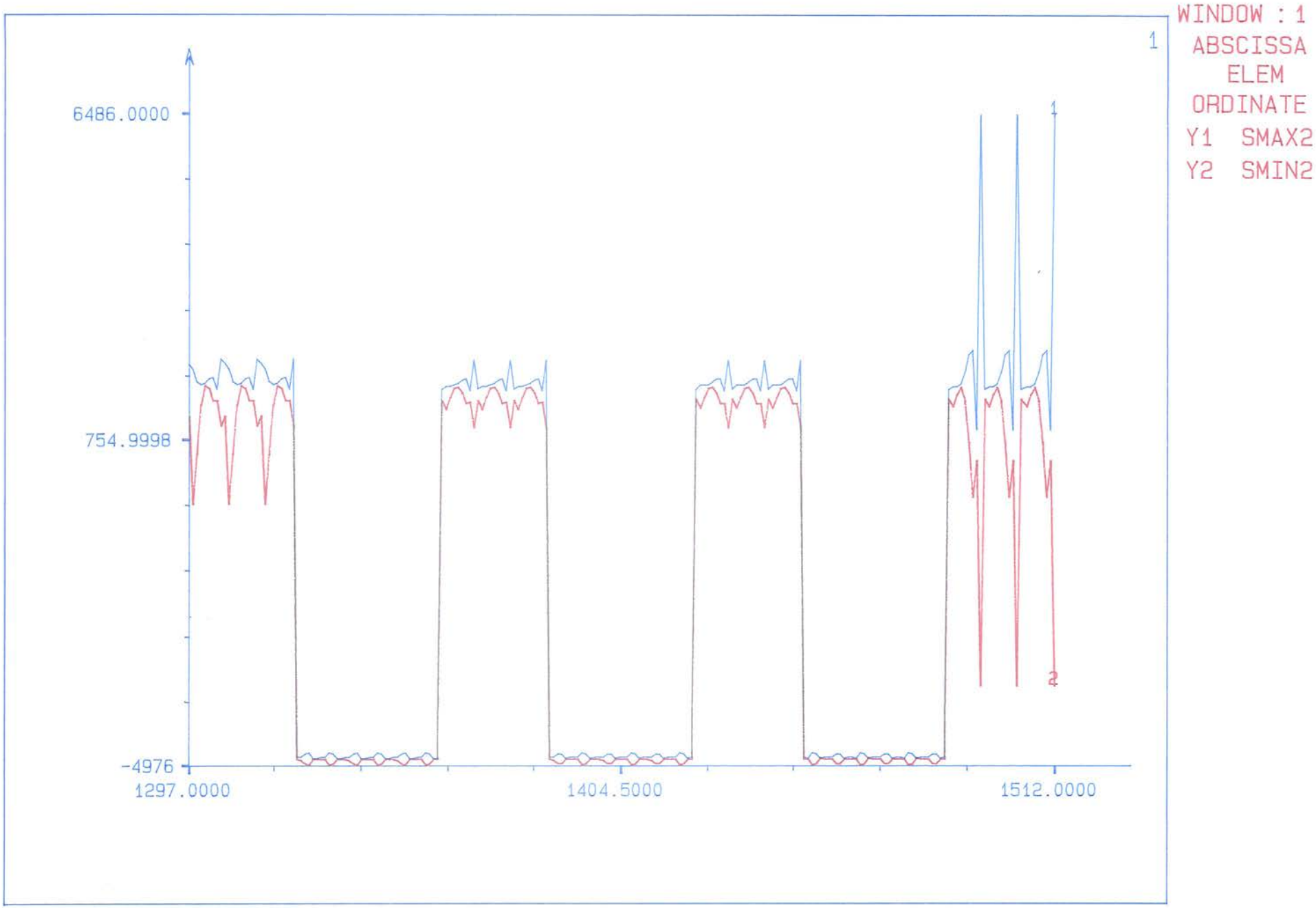

Figure 4.9 Panel Joint Beam Principal Stresses (End-2) vs. Element Numbers