Fermilab

SDC SOLENOID DESIGN NOTE #151

TITLE: Report of Magnet Working Group Meeting, Aug 1-2, 1991

AUTHOR: R. Fast, J. Krebs, B. Richardson, R. Stanek, A. Stefanik, B. Wands

DATE: Aug 6, 1991

ABSTRACT: This design note consists of the viewgraphs that were shown by the Fermilab participants in the meeting and Ron Fast's meeting notes. The paper Akira Yamamoto presented was distributed at the meeting; copies are available from him.

Meeting Notes (R. Fast)

These are my notes, with minimal editing and with no attempt to arrange them logically.

1. Volume of LHe in cooling tube--100 to 200 L OK for quench propagation. AY: coil outlet quality (gas fraction) of 20% is OK. Size the cooling tube diameter for the cooldown requirements. Use a cooldown temp difference of 50 to 100 K.

2. AY: 400 sense wires probably OK, but don't take them up to control dewar.

3. BR: Shields can be LIN cooled since detector hall has many other sources of nitrogen leakage in it. AY: we should continue to study the question of LIN vs cold GHe for shields and understand why the Europeans use GHe.

4. AY says it should be possible to do a fast discharge without quenching the coil. This is not the case at CDF.

5. AY: for CFRP shell, should compare interaction length rather than radiation length.

6. AY doesn't know the relative costs of isogrid and honeycomb vacuum shells. He says the vacuum reliability of honeycomb is the same as isogrid, since both are welded.

7. BK: Disadvantage of having sliding truss member on the coil--possible hot spot.

8. What is the temperature of the vacuum shells on loss of vacuum--with no convection to warm them?

9. Bus should be sized to survive a slow dump following loss of cooling water flow. (CDF bus could do this.)

10. BR: SSCL standards for vacuum vessel--design using 1/4 UTS and fabricate to ASME PV Code requirements with respect to material certs and control, weld procedure specs. Welds should be only those permitted by PV Code.

11. AY Bitnet address: TARY@JPNKEKTR

12. BK: What is the effect of E/m on the coil thickness? What is the reliability vs thickness (E/m) trade-off? AY says the stronger conductor allows you to go do higher E/m.

13. BK: the thickness is important to the calorimetry only at the ends. Therefore it is not necessary to be aggressive in the coil design, but in the design of the end.

14. AY proposes G-10 ground insulation on the ID of the coil.

15. BK: the 50 mm on the inside and outside of the cryostat are stay-out zones. The cryostat should be toleranced away from these zones: 2050 mm +0/-nn and 1750 mm +mm/-0.

16. AY: in his Fig 3.5, the coil temp line going through the operating point is about 6.7 K. The temperature is linear from 4.2 to 9.3 K (at the origin) along the load line.

17. BK: we should make the point that even without high-strength conductor, the conductor and outer support cylinder dimensions will still work, with a lower safety factor.

18. AY "prefers" a terminal voltage of 800 V on quench, ie a dump resistor of 0.1 ohm, but he is "flexible". The breakdown voltage of ground plane insulation is 13 kV.

19. AY: the conductor cold work is achieved by rolling. The impurities in his Fig 9.4 are 100-200 ppm zinc and silicon.

20. AY says they have seen no change in conductor porperties after one week at 300 K for the high-strength conductor--no room temperature annealing.

21. Furakawa got the contract for the conductor for the prototype, Toshiba got the contract for the winding fixture.

22. Regarding the outer vacuum shell--isogrid is the baseline, but AY may choose to study aluminum honeycomb on his own.

23. Control dewar. Be careful of definition of control dewar. For Topaz AY had a small "service port" on the magnet; it contained a 30-L LHe pot for the VCL. It did not have ball valves on the bayonets and so did not need trapped volume RVs. The control dewar had a 1000-L LHe vessel with a

subcooler inside, all the RVs and control valves. AY prefers this same arrangement for SDC--Toshiba to provide service port and Fermilab the control dewar. Question--where does the vacuum pump for the cryostat go--on the service port?

24. Thermosiphon (TS)--AY will study if TS will be used for prototype. If so the control dewar and service port are combined. Stanek suggested learning how well the Cleo 2 and Aleph magnets operate-both use TS-to see how they compare with forced flow for SDC.

25. Coil average radius--BK and AY to learn (or decide) this at LBL meeting next week. AY's dimension of 1850 mm is cold.

26. He Cooling tube calculations--both AY and Andy S. make calculations on sizing and placement of cooling tube. AS to calculate for full size solenoid, use this scheme on prototype.

27. Cold-mass supports--AY: there is good reason for Fermilab to develop supports (better material availability than in Japan). FNAL to continue work on composite supports, when test results are complete FNAL will make a proposal to AY/KEK regarding supports for prototype.

28. Schedule for prototype--on page 23 of AY's report: finish coil winding March 1993, start assembly Apr-May 1991, therefore ship parts from Fermilab Nov 1992.

29. Agreement regarding joint participation in the prototype coil project

Vacuum vessel--by Fermilab
Outer and inner shell, annular end bulkheads

Cold mass--by KEK

LIN shields--by KEK

Chimney and service port--by KEK

Control dewar (if needed)--by Fermilab

Support system--to be determined

Assembly and test--at KEK

Refrigerator or LHe for test--by KEK

Power supply and instrumentation--by KEK

AY likes the boundary between FNAL and KEK at 300 K, the cold-to-warm supports is negotiable.

30. Prototype length

Coil active length = 1.9 m

Cryostat length = 2.4 m/94.5" +0, -100 mm

SDC SOLENOID MAGNET WORKING GROUP MEETING

August 1-2, 1991

The Fermilab and KEK groups will discuss their R&D work in a series of presentations. These include:

1. Refrigerator and coil cooling schemes--Andy Stefanik
   cooldown and quench recovery, pressure drop, transfer line route, surface facilities layout

2. Chimney and control dewar--Andy Stefanik
   penetration through detector, installation, field joint

3. Materials for outer vacuum shell--Ron Fast
   SDC DN-150,

4. Status of design of isogrid vacuum shell--Ron Fast

5. Cold-mass support schemes--Jim Krebs
   Warren truss with composite members

6. Attachment of cryostat to calorimeter--Jim Krebs, Chuck Grozis

7. Electrical equipment--Ron Fast

8. Magnetostatics and coil preload--Bob Wands, Ang Lee

9. Safety and Quality Assurance--Bob Wands
   effect of the "new culture", SSCL standards and requirements

10. Cost and schedule--Rich Stanek
    impact of a failure

11. Presentation for collaboration meeting--Akira Yamamoto

12. Review of R&D work at KEK--Akira Yamamoto
    quench calculations, placement and size of cooling tubes

13. Prototype magnet--all
    To what extent does prototype model the full-size magnet?
    Who does what? Dimensions? Interfaces? Schedule?
    Coil-cold mass
    Supports
    LIN shields
    Vacuum vessel
    Chimney
    Control dewar
    Power supply, etc
    Assembly scheme

14. SDC proposal to SSCL--Akira Yamamoto, Bob Kephart
    Who writes what?

15. Design report--Akira Yamamoto, Bob Kephart
    Who writes what section?
    Does SSCL contribute?

Topic #1 - Andy Stefanik

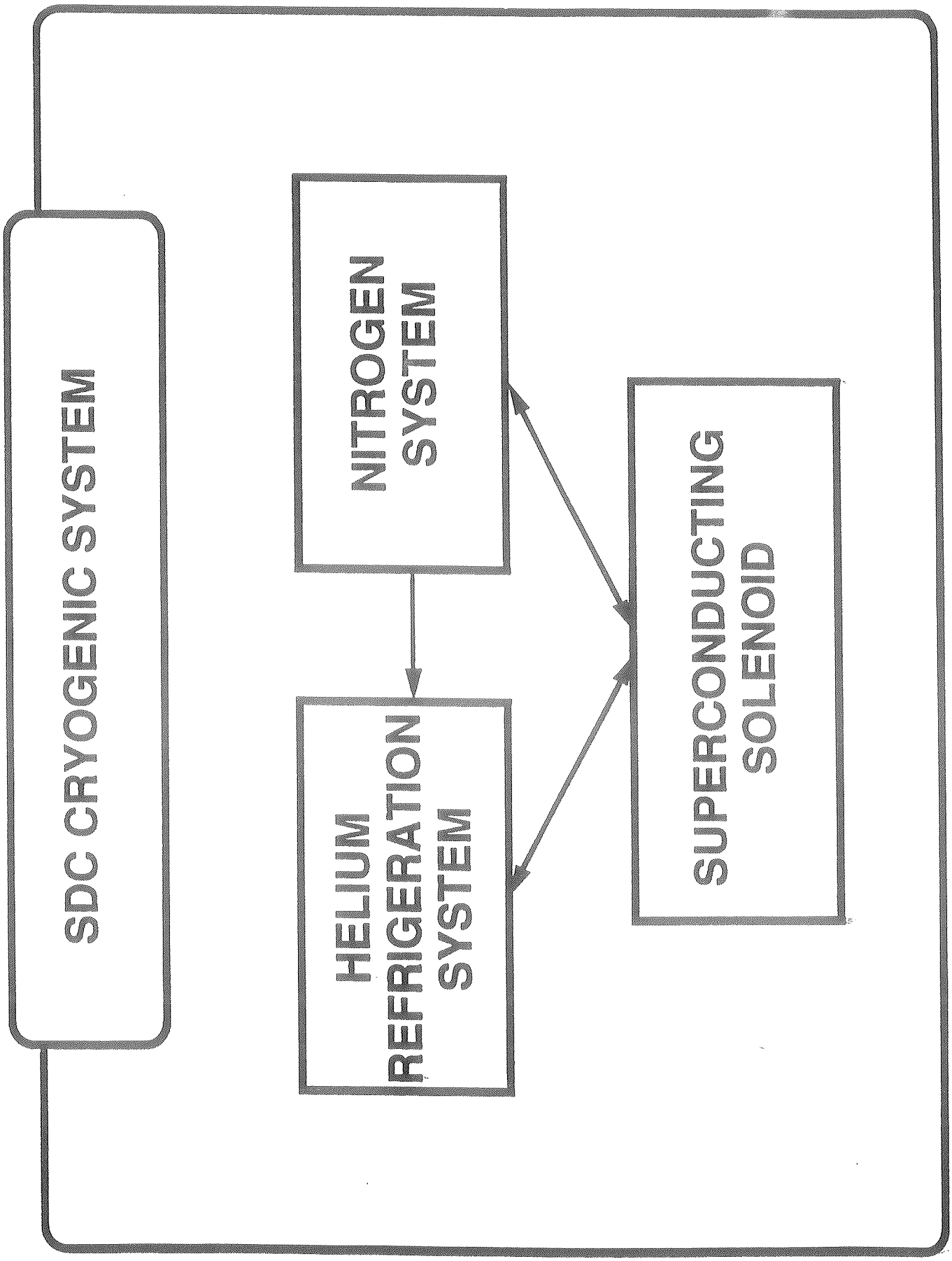

FERMILAB
ENGINEERING NOTE

SECTION	PROJECT	SERIAL-CATEGORY	PAGE
2.1	SDC		21

SUBJECT: SINGLE LOOP HELIUM SYSTEM WITH CHARGING LOAD

NAME: AMS
DATE: 12/3/90 REVISION DATE: 1/18/91

SYSTEM DATA FOR POINT NO. →		1	2	3 (2)	4 (3)	5 (3)	6	7	8	9	10
FLUID	-	He	He	He	He	He	He	He	He	He	He
FLOW	G/SEC	100	91.7	8.3	1.2	90.5	90.5	90.5	90.5	90.5	90.5
PRESSURE	PSIA	27.2	32.3	16.5	32	29.6	31.1	25.2	21.7	20.2	16.5
SATURATION PRESSURE	PSIA	17.3	21.1	16.5	20.1	20.1	20.2	25.2	21.7	20.2	16.5
TEMPERATURE	K	4.4	4.63	4.35	4.57	4.57	4.58	4.85	4.67	4.58	4.35
QUALITY	%	0	0	9	0	0	0	0	16.4	18.8	33
HEAT LEAK	W	–	130.3	15 (4)	–	16.5	5.1	152.4	87.9	5.1	224.6
FRICTION HEAT LOAD	W	–	14.7	–	–	1	1.3	33.5	25.2	3.8	2.1

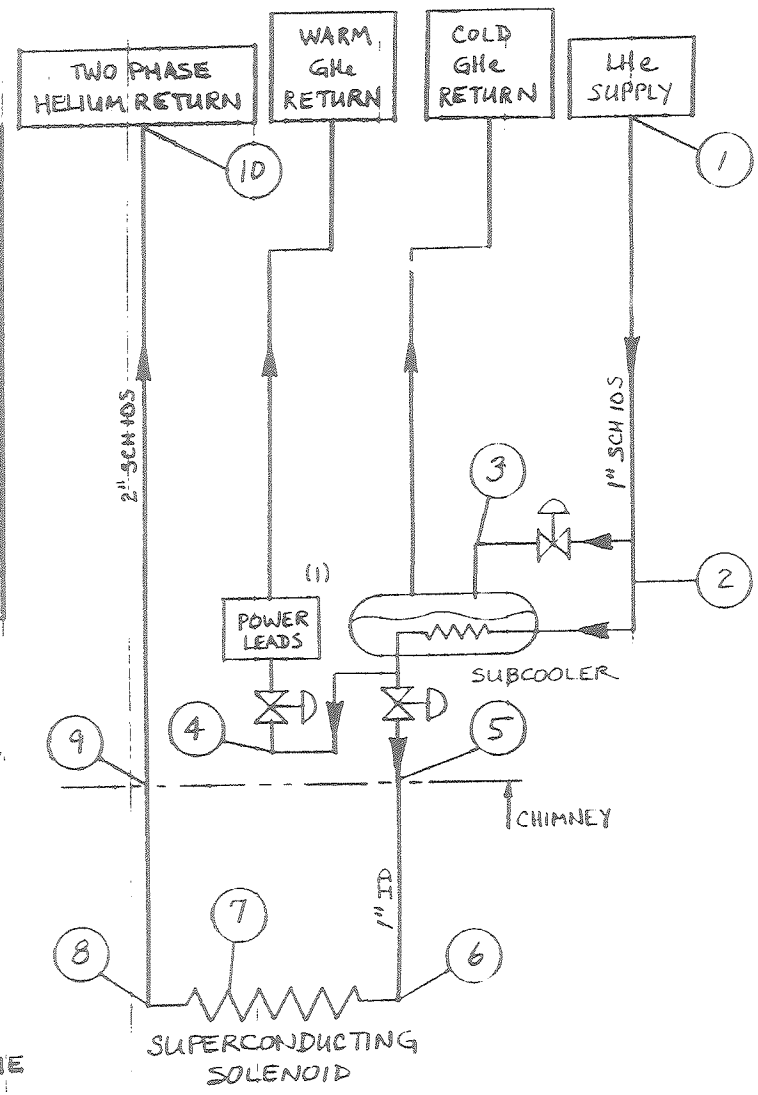

NOTES

1) HELIUM VAPOR FROM THE SUBCOOLER MAY BE USED TO COOL THE POWER LEADS.

2) THE TEMPERATURE IN THE SUBCOOLER COULD BE AS LOW AS 4.25 K IF A COLD COMPRESSOR IS PROVIDED AT THE SUBCOOLER.

3) FURTHER SUBCOOLING IS POSSIBLE AT POINTS 4 AND 5.

4) SUBCOOLER HEAT LEAK = 15 W.

5) AS NOTED IN THE CALCULATIONS, LINE HEAT LEAK IS BASED ON USING SUPERINSULATED PIPING WITHOUT AN LN_2 OR He SHIELD. THE HEAT LEAK FOR THIS LINE IS ABOUT 4.4 W/m^2. HEAT LEAK FOR THE TEVATRON TRANSFER LINE, WHERE THE HELIUM LINE IS SHIELDED BY A PIPE FULL OF LN_2, THE HEAT LEAK IS 0.27 W/m^2. REFERENCE 3 SUGGESTS USING 2.3 W/m^2 TO ESTIMATE HEAT LEAK FOR A LN_2 SHIELDED HELIUM LINE.

TOTAL HEAT LOAD SUMMARY: (WITH 220 W CHARGING LOAD INCLUDED)

720 W FOR SUPERINSULATED PIPING WITHOUT A SHIELD
391 W FOR TEVATRON TYPE PIPING
698 W FOR REFERENCE 3 ESTIMATE

SDC Solenoid Design Note #136

R & D PLAN AND STATUS

OF THE

SDC THIN SUPERCONDUCTING SOLENOID

A. YAMAMOTO (KEK) R. KEPHART (FNAL)

---

* SDC MEETING HELD AT KEK, MARCH 5 1991

Coil Cooling Requirements

Desired temperature difference between conductor and the warmest place on the outer support cylinder during steady-state operation ≤0.5K

At what temperature do you wish the outer support cylinder maintained during steady-state operation? ≤ 0.5K

How uniform do you wish the temperature of the outer support cylinder to be during steady-state operation? ≤ 0.5K

What should be the outer support cylinder temperature during a charge? How uniform should it be? ≤ 5K ±0.2

What is the maximum amount of liquid helium in the cooling tube attached to the outer support cylinder which provides a sufficiently fast quench propagation rate to limit the maximum hot spot temperature to the desired value? order of 100ℓ

Do you have a preference as to the cooling scheme--forced two-phase, supercritical or thermosiphon? either

We are thinking of operating the radiation shields and thermal intercepts with cold helium gas at about 50 K. Do you have any comments on this idea? The supports will also have a 4.5-K intercept. b/w 50 ~70 → Possible

We may need a separate cool-down circuit on the outer support cylinder: do you have any comments?

If thermosiphon it will be automatic

FERMILAB
ENGINEERING NOTE

SECTION	PROJECT	SERIAL-CATEGORY	PAGE
	SDC		

SUBJECT: ΔT BETWEEN COOLING TUBES ON THE SUPPORT CYLINDER

NAME: AMS

DATE: 7/23/91

REVISION DATE:

$$\Delta T = \frac{\dot{q} L^2}{2kt}$$

$$\dot{q}_{\substack{\text{HEAT}\\\text{LEAK}}} = \frac{10.5\ W}{(47+46)\,m^2} = 0.11\ W/m^2 = 1.1 \times 10^{-5}\ W/cm^2$$ FROM CDF DATA

TUBE SPACING $= 2L = 2\pi\,(1.864\,m)/32 = 0.366\ m$
$= 36.6\ cm$

(CDF TUBE SPACING = 39.85 cm)

$\Rightarrow L = 18.3\ cm$

$t = 3.1\ cm$ (CDF SUPPORT CYLINDER THICKNESS = 1.6 cm (4.525 cm AT THE ENDS)

$k = 0.04\ W/cm\,K$ AT 5K

ASSUME $k = 0.04\,(0.8) = 0.032$ AT 5K AND 2T.

$A_S = 2\pi\,(1.864\,m)(9 - 0.25)\,m = 103\ m^2$

$$\dot{q}_{\text{CHARGING}} = 220\ W/103\,m^2 = 2.2\ W/m^2 = 2.2 \times 10^{-4}\ W/cm^2$$

$$\Delta T = \frac{(2.2 \times 10^{-4} + 1.1 \times 10^{-5})\ W/cm^2\ (18.3)^2\ cm^2}{2\left(0.032\ \frac{W}{cm\,K}\right)(3.1\ cm)}$$

$= 0.4\ K$

FOR $\dot{q}_{\substack{\text{HEAT}\\\text{LEAK}}} = 3\,(1.1 \times 10^{-5}\ W/cm^2)$, $\Delta T = 0.43\ K$

534393

FERMILAB
ENGINEERING NOTE

SECTION	PROJECT	SERIAL-CATEGORY	PAGE
	SDC		

SUBJECT

NAME: AMS

DATE: 8/1/91

REVISION DATE:

INCREASE TUBE ID TO DECREASE ΔP AND LOWER COOLING TUBE OPERATING TEMP.

FOR EXAMPLE, CALCULATE TUBE ID TO DECREASE ΔP BY HALF.

$$\Delta P_{\substack{LARGER\\DIAM}} \doteq \Delta P_{\substack{SMALLER\\DIAM}} \left(\frac{d_{SMALL}}{d_{LARGE}} \right)^5$$

$$\frac{10.12/2}{10.12} = \left(\frac{1}{d_{LARGE}} \right)^5 \Rightarrow d_{LARGE} = 1.15''$$

$T_{MAX} \doteq 4.75\ K$ (ESTIMATE)

FERMILAB
ENGINEERING NOTE

SECTION	PROJECT	SERIAL-CATEGORY	PAGE
	SDC		

SUBJECT

NAME: AMS

DATE: 8/1/91

REVISION DATE:

VOLUME OF 1.15'' ID TUBING.

$$VOL = 1{,}100\ ft \left[\frac{\pi}{4} \left(1.15''/12\ ft \right)^2 \right] = 7.93\ ft^3 = 225\ \ell$$

$$> 100\ \ell$$

FERMILAB
ENGINEERING NOTE

SECTION	PROJECT	SERIAL-CATEGORY	PAGE
	SDC		

SUBJECT: HELIUM COOLING CIRCUIT

NAME: AMS

DATE: 7/31/91

REVISION DATE:

COMPARE THIS SDC DESIGN TO CDF.

	CDF	SDC	COMMENTS ON SDC DATA
TUBE ID (mm)	21	19.7	7/8" OD X 0.049" WALL
TUBE Le (m)	185	192	LONGER RUN
FLOW (g/s)	31	45	FLOW IN EACH RUN
PEAK SOLENOID CHARGING LOAD (W)	100	220	DN #119
CALCULATED ΔP DURING CHARGING (psi)	—		

534393

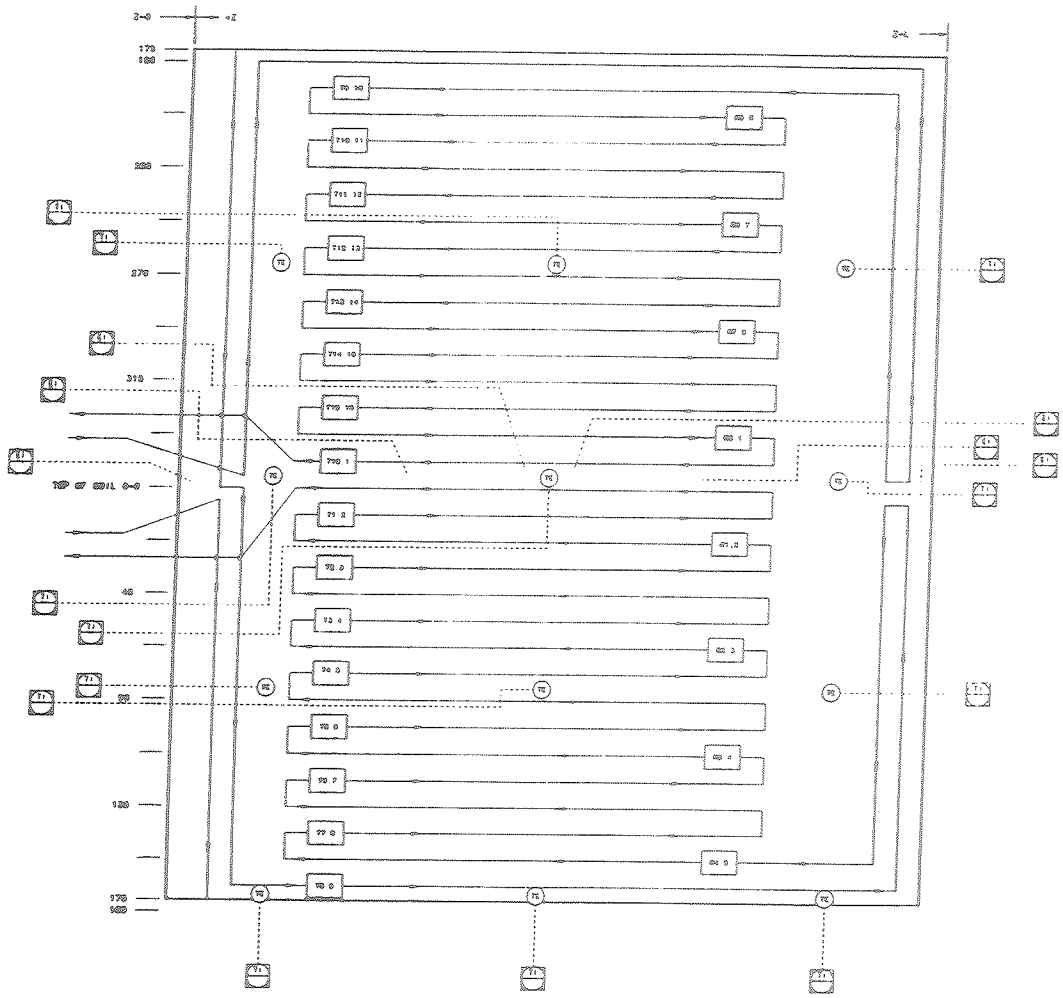
Z=0
+Z
Z=L
170
160
220
270
310
TOP OF COIL Z=0
40
20
120
170
160
TE
TE
TE

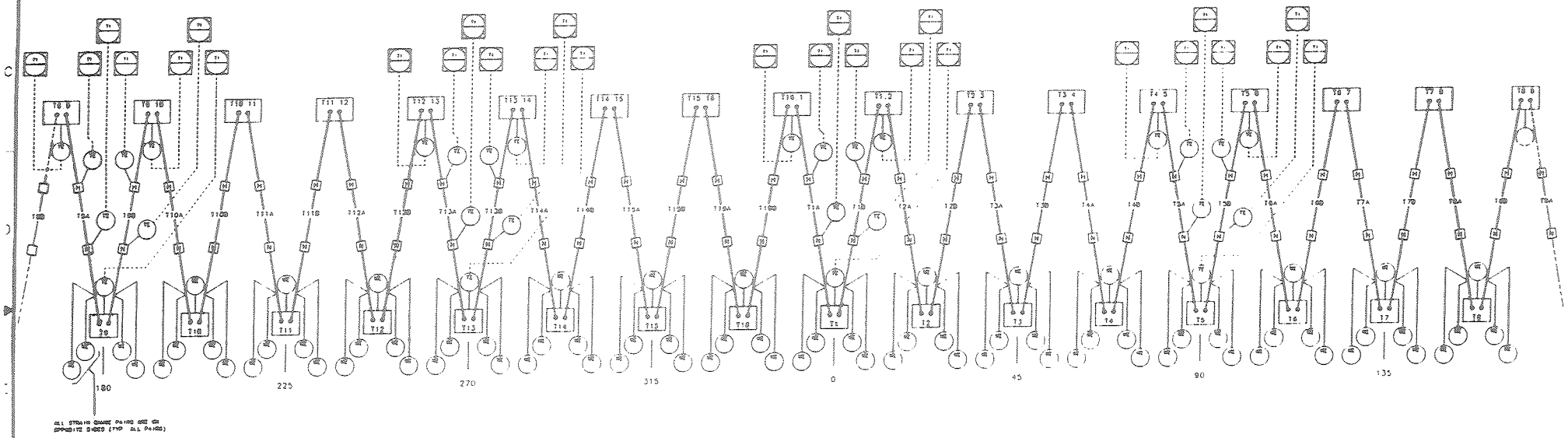

FERMI NATIONAL ACCELERATOR LABORATORY
UNITED STATES DEPARTMENT OF ENERGY

SOLENOIDAL DETECTOR COLLABORATION
TRUSS SUPPORT INSTRUMENTATION

SUBJECT: OPTIMUM TEMPERATURE FOR ONE RADIATION SHIELD

NAME: AMS

DATE: 5/14/91

REVISION DATE:

EQUATIONS & DATA

1. RADIATION HEAT TRANSFER FOR CYLINDRICAL SHIELDS

$$q_r = \sigma A_1 \mathcal{F} (T_1^4 - T_2^4)$$

$$\mathcal{F} = \frac{1}{\frac{1-\epsilon_1}{\epsilon_1} + 1 + \frac{A_1(1-\epsilon_2)}{A_2 \epsilon_2}}$$

WHERE SUBSCRIPT 1 REFERS TO THE SMALLER SURFACE

2. ABBREVIATIONS

VV ≡ VACUUM VESSEL

RS ≡ RADIATION SHIELD

SS ≡ SUPPORT CYLINDER

CI ≡ COIL INSIDE SURFACE

3. TEMPERATURES

$T_{VV} = 300$ K

T_{RS} VARIES FROM 100 K TO 10 K

$T_{SS} = 4.5$ K

$T_C = 4.5$ K

4. MATERIALS

VACUUM VESSEL : ALUMINUM ; COIL : HIGH PURITY ALU

RADIATION SHIELD : ALUMINUM COVERED WITH 2.54 CM THICK MLI FACING VACUUM VESSEL

SUPPORT CYLINDER : CASE 1 – ALUMINUM COVERED WITH ALUMINUM TAPE
CASE 2 – ALUMINUM COVERED WITH 2.54 CM THICK MLI

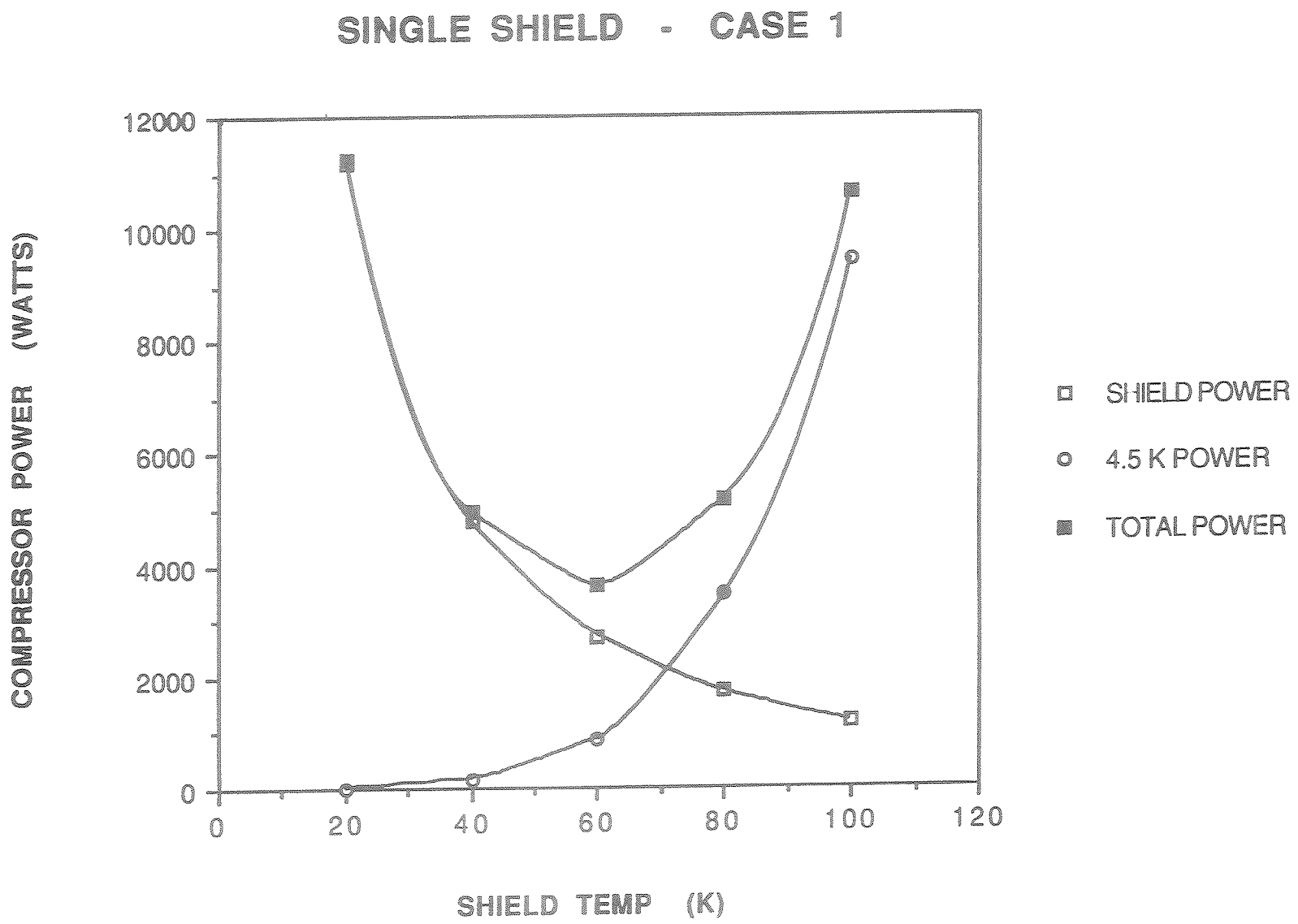
SINGLE SHIELD - CASE 1
COMPRESSOR POWER (WATTS)
12000
10000
8000
6000
4000
2000
0
0
20
40
60
80
100
120
SHIELD TEMP (K)
SHIELD POWER
4.5 K POWER
TOTAL POWER

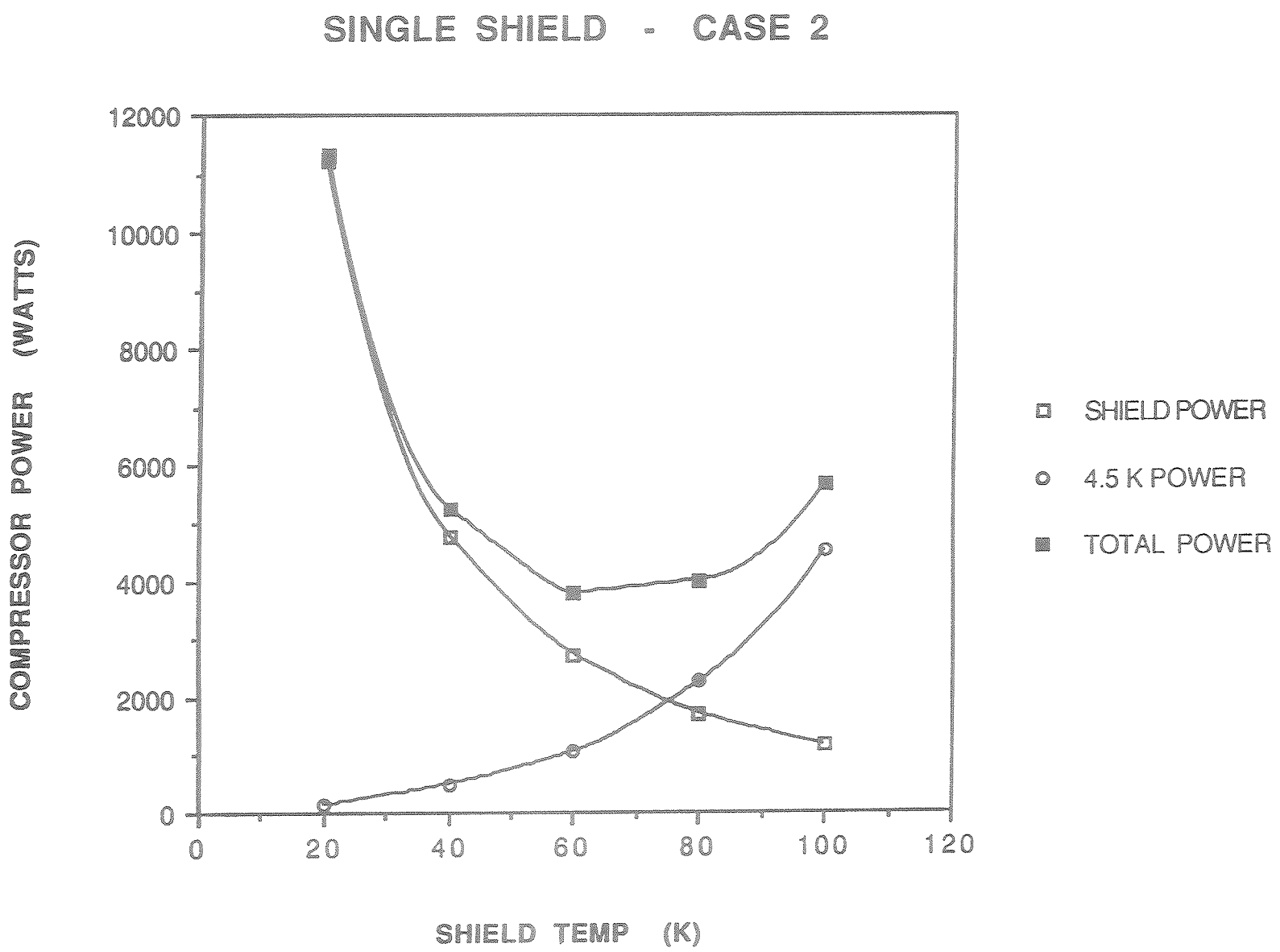
SINGLE SHIELD - CASE 2
COMPRESSOR POWER (WATTS)
12000
10000
8000
6000
4000
2000
0
0
20
40
60
80
100
120
SHIELD TEMP (K)
SHIELD POWER
4.5 K POWER
TOTAL POWER

FERMILAB
ENGINEERING NOTE

SECTION	PROJECT	SERIAL CATEGORY	PAGE
	SDC		1/2

SUBJECT: N_2 SHIELDS

NAME: AMS

DATE: 7/29/91

REVISION DATE:

SHOW THIS INSTRUMENTATION AT ALL * LOCATIONS.

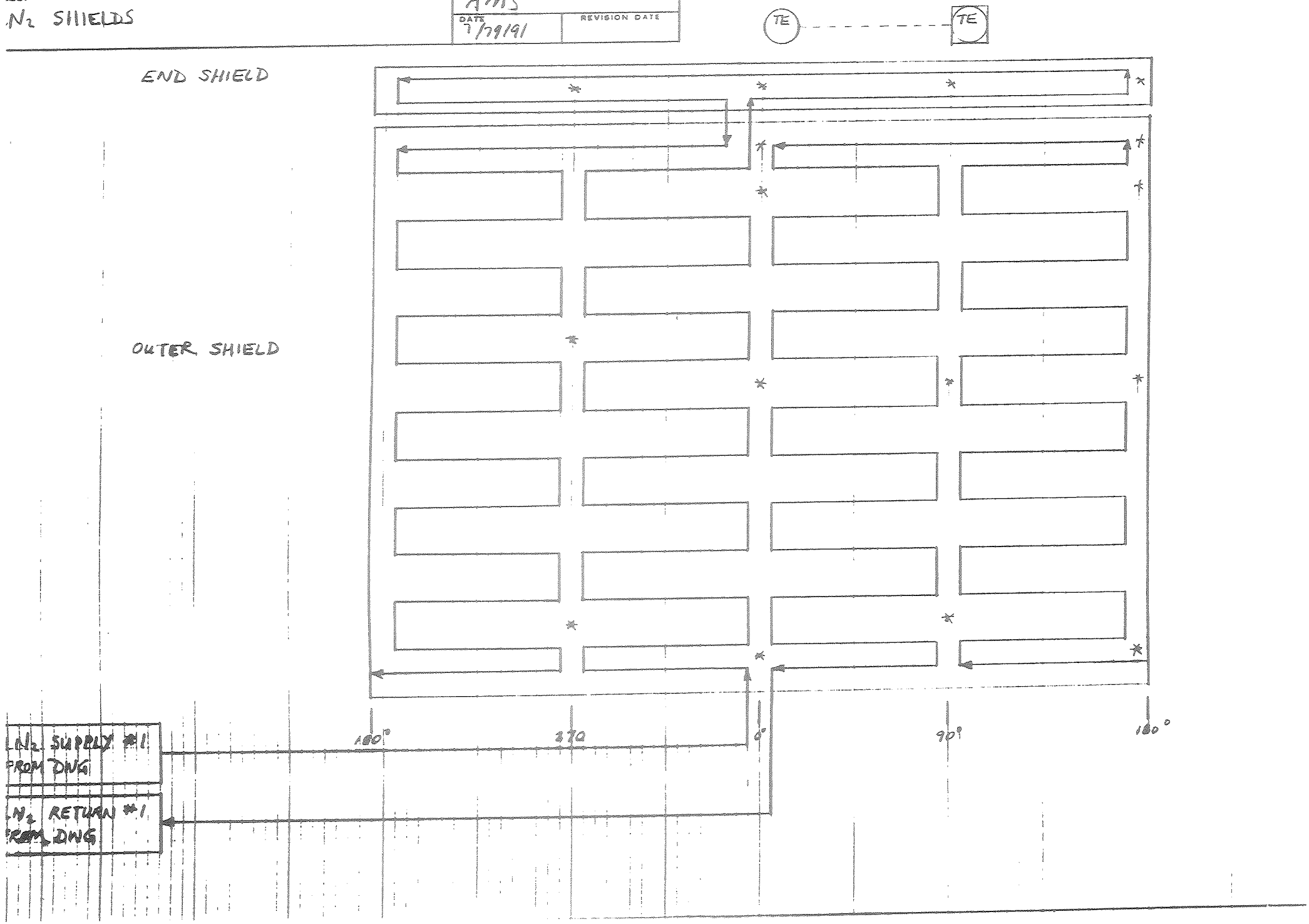

FERMILAB ENGINEERING NOTE	SECTION	PROJECT SDC	SERIAL-CATEGORY	PAGE 2/2
SUBJECT V_2 SHIELDS		NAME AMS		
		DATE 7/29/91	REVISION DATE	

NOTES.
1) ALL TUBING IS INSTALLED ON THE SIDE OF THE SHIELD WHICH FACES THE SOLENOID.

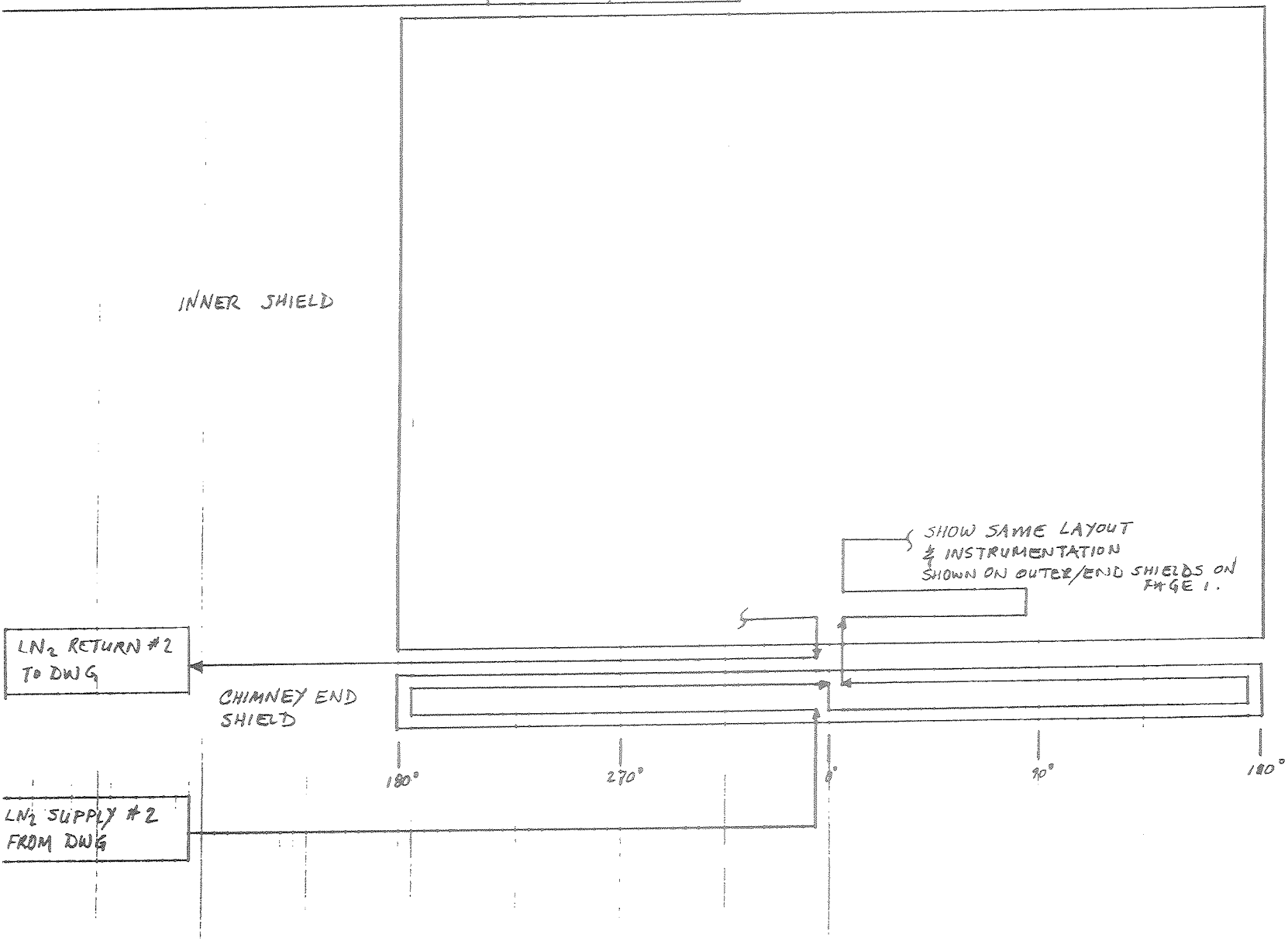

FERMILAB
ENGINEERING NOTE

SECTION	PROJECT	SERIAL CATEGORY	PAGE
	SDC		

SUBJECT: LN_2 OUTER SHIELD ~~SHELL ASSEMBLY~~ COOLING TUBE ROUTE

NAME: AMS
DATE: 7/18/91
REVISION DATE:

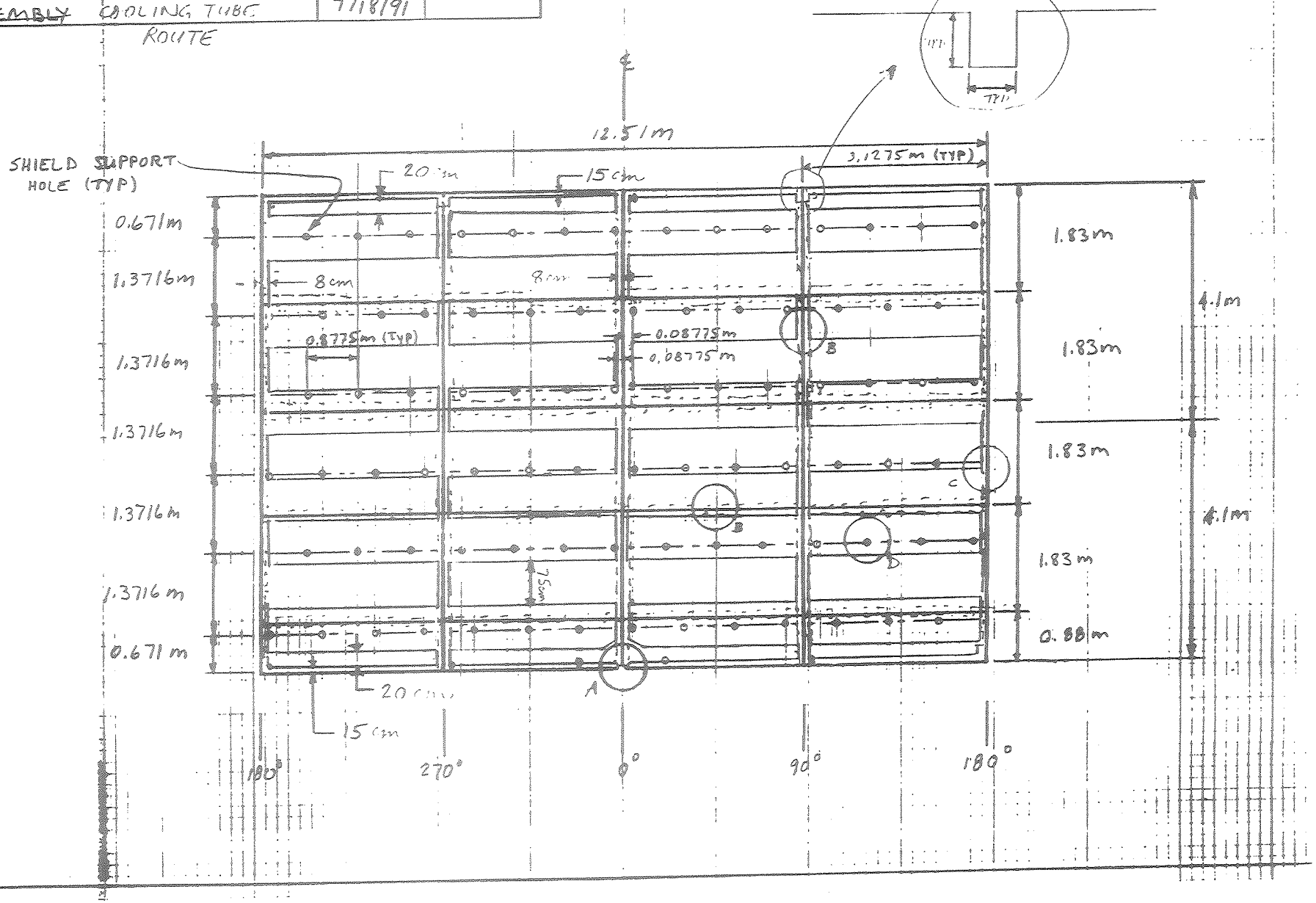

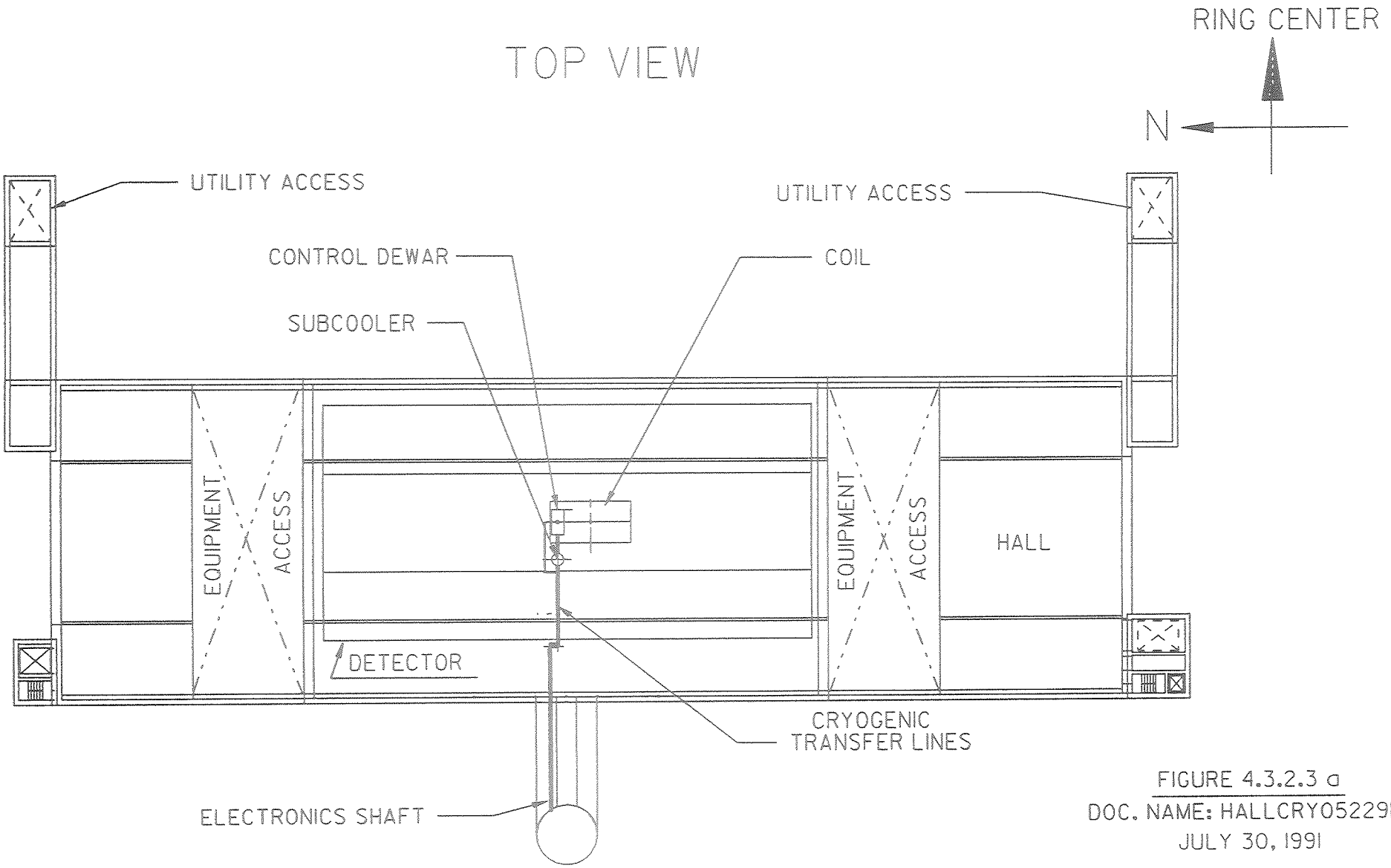

FIGURE 4.3.2.3 a
DOC. NAME: HALLCRYO52291
JULY 30, 1991

Topic #1 - Bob Richardson

ELEVATION LOOKING EAST

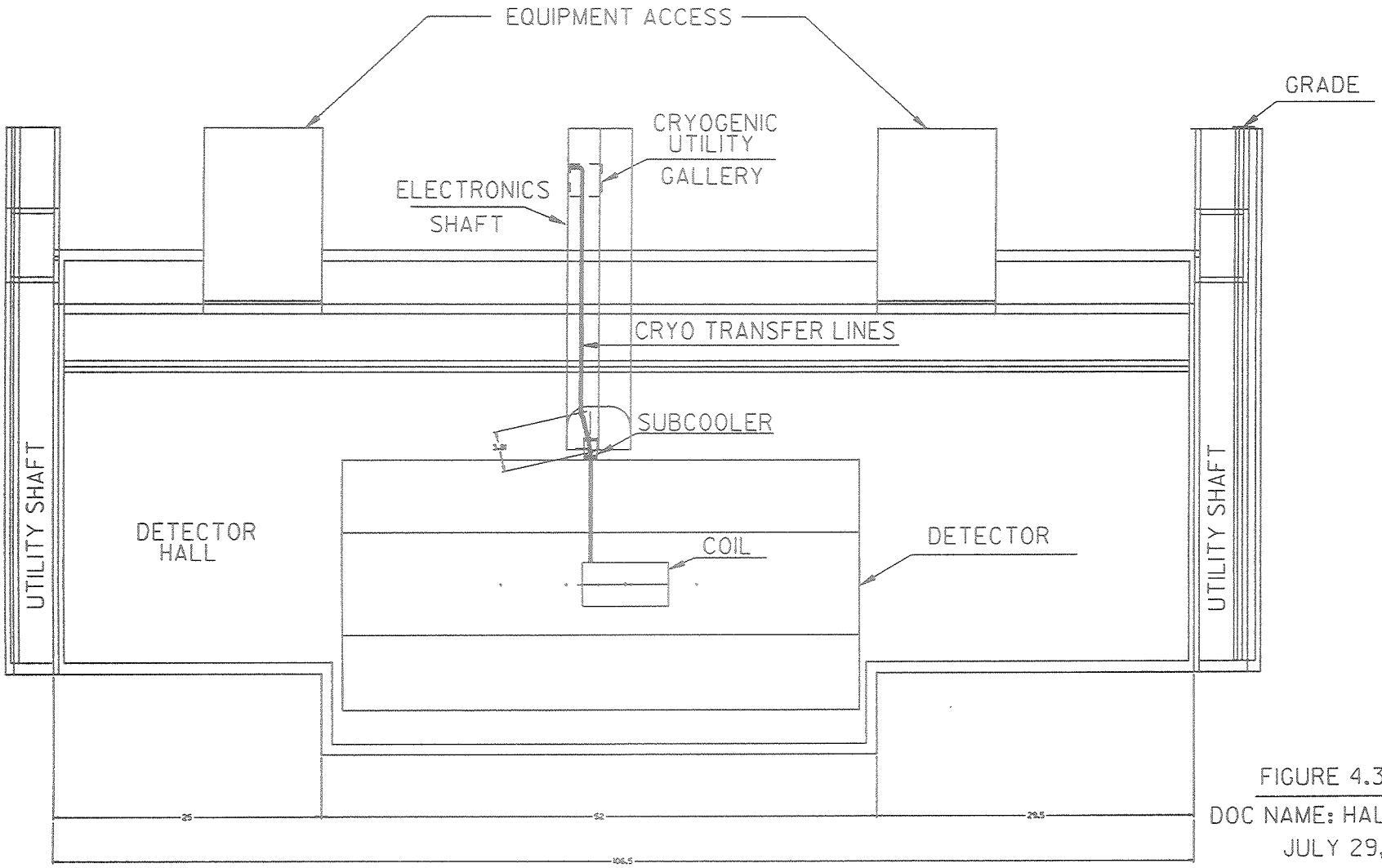

FIGURE 4.3.2.3 b

DOC NAME: HALLCRYO52291

JULY 29, 1991

ELEVATION LOOKING NORTH

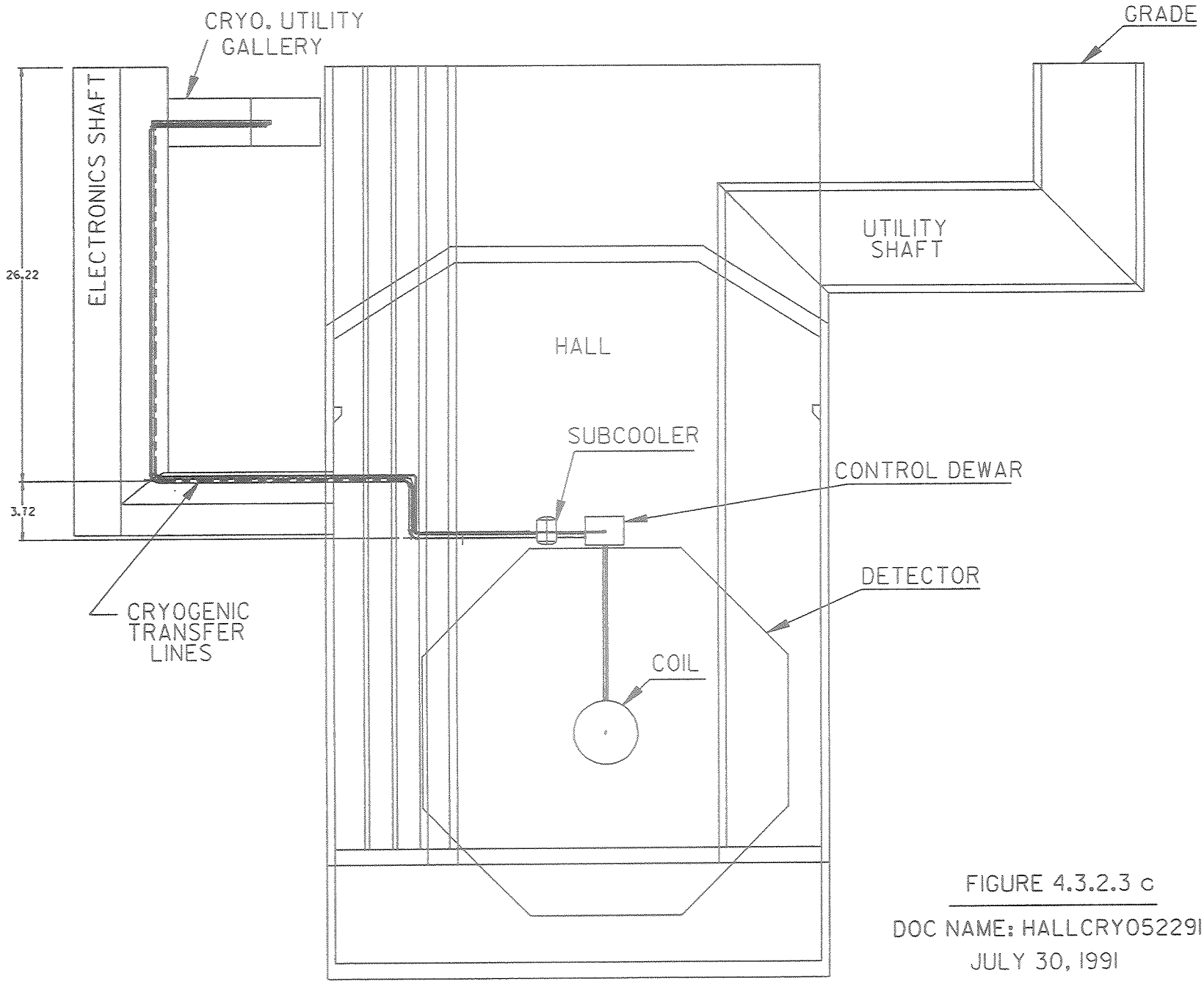

FIGURE 4.3.2.3 c

DOC NAME: HALLCRY052291

JULY 30, 1991

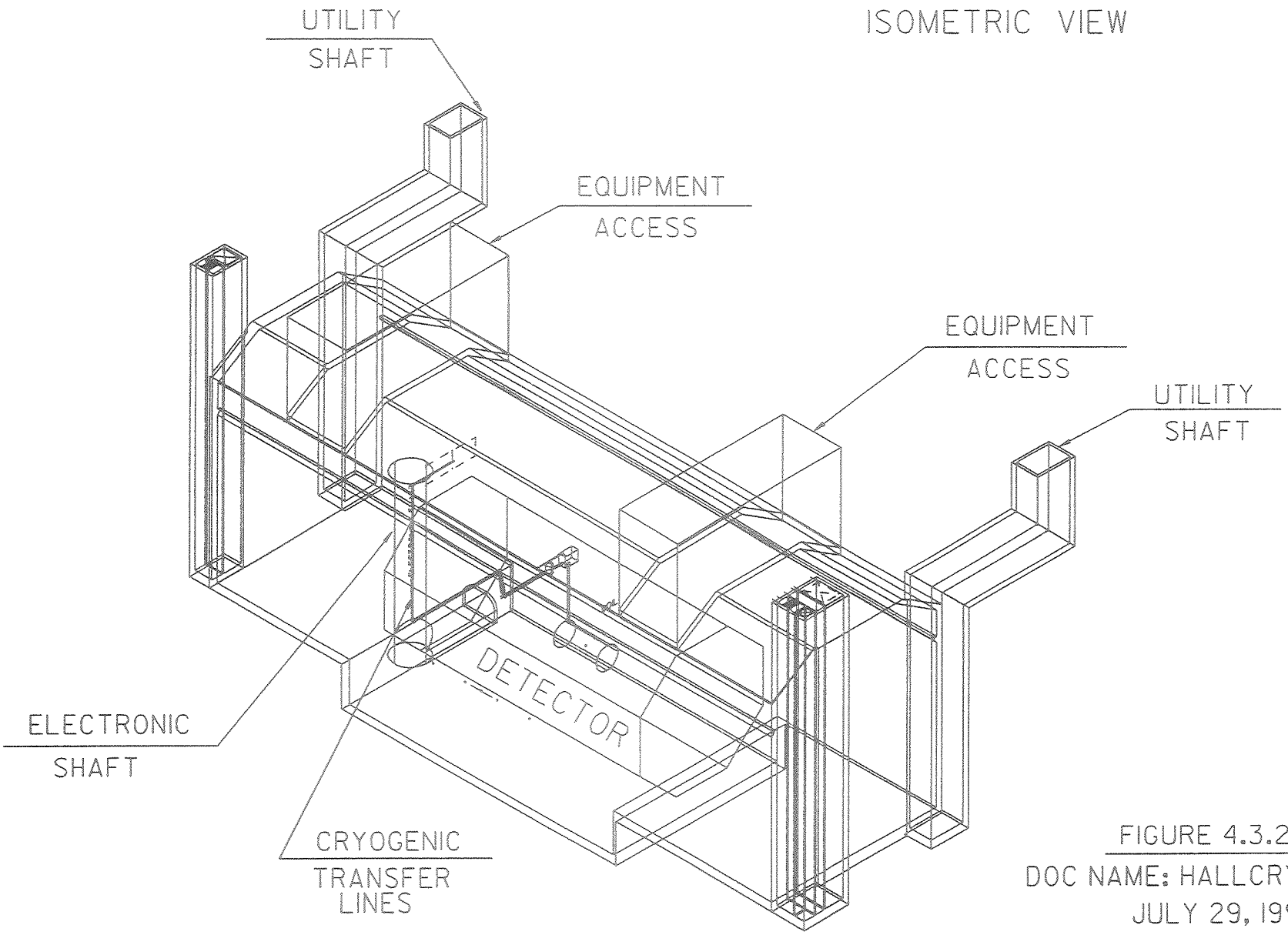

FIGURE 4.3.2.3 d

DOC NAME: HALLCRY052291

JULY 29, 1991

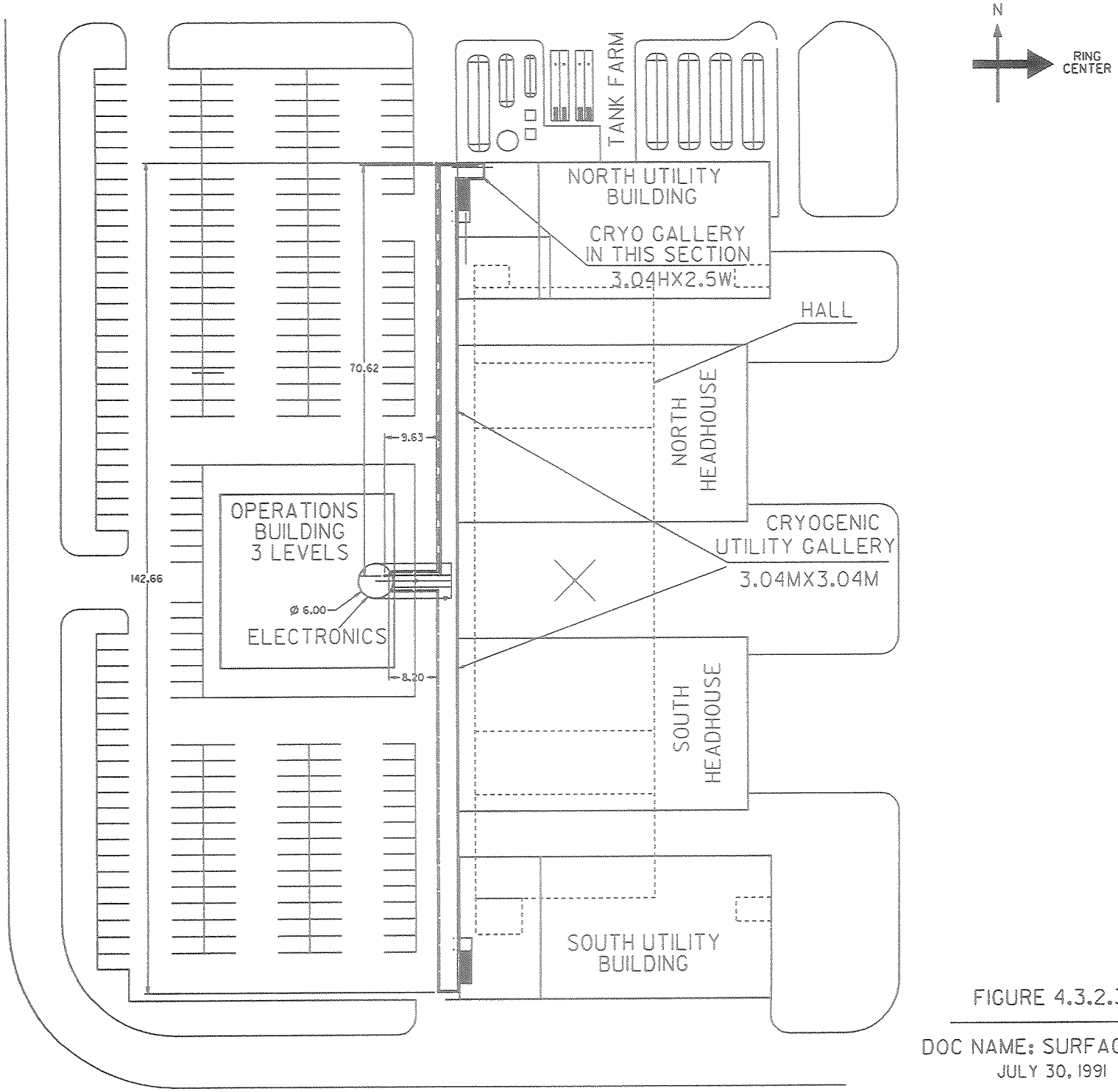

FIGURE 4.3.2.3 e

DOC NAME: SURFACE3.CRYO
JULY 30, 1991

ELEVATION LOOKING NORTH

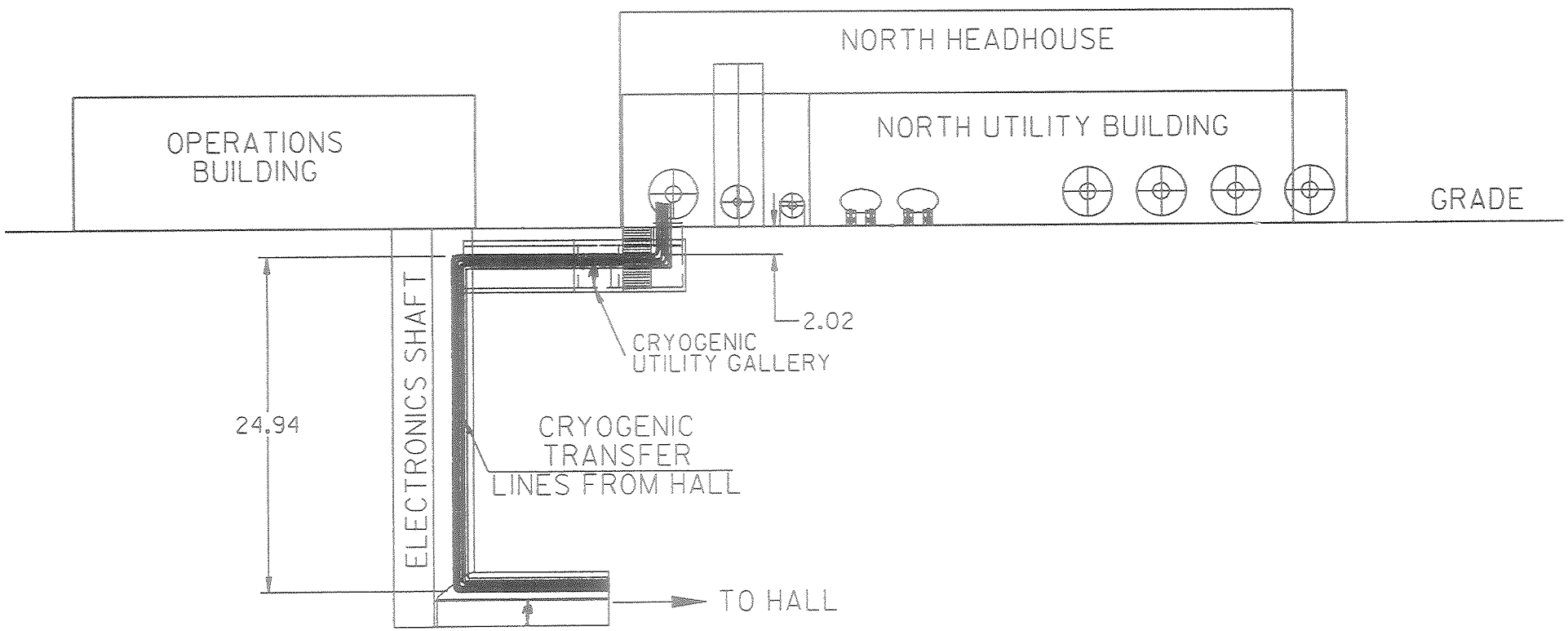

FIGURE 4.3.2.3 f

DOC NAME: SURFACE3.CRYO

JULY 29, 1991

ELEVATION LOOKING WEST

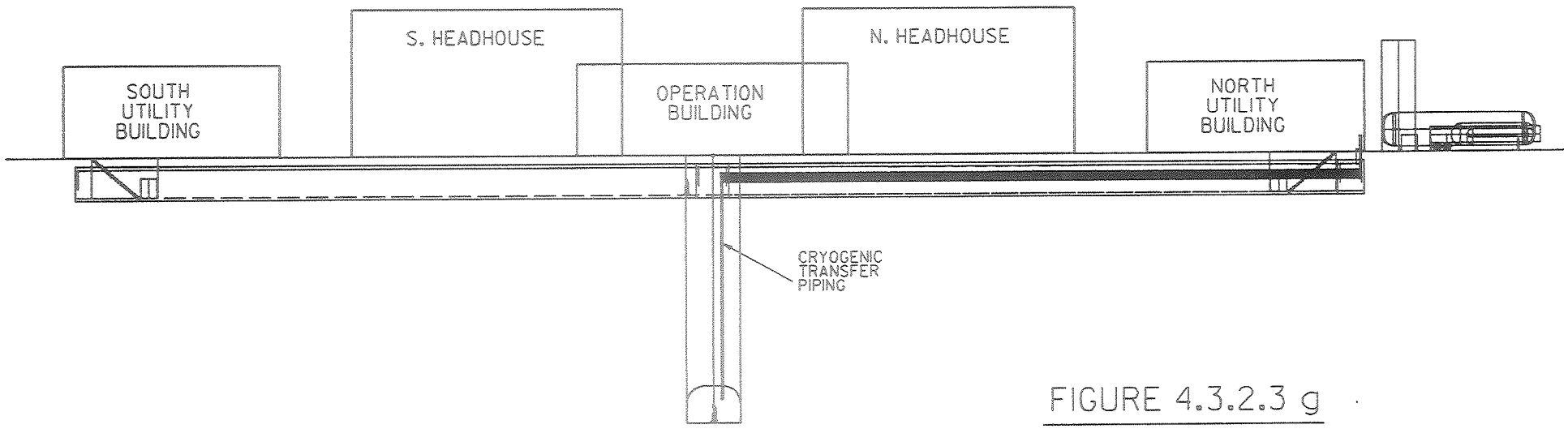

FIGURE 4.3.2.3 g

DOC. NAME: SURFACE3.CRYO

JULY 30, 1991

ISOMETRIC VIEW

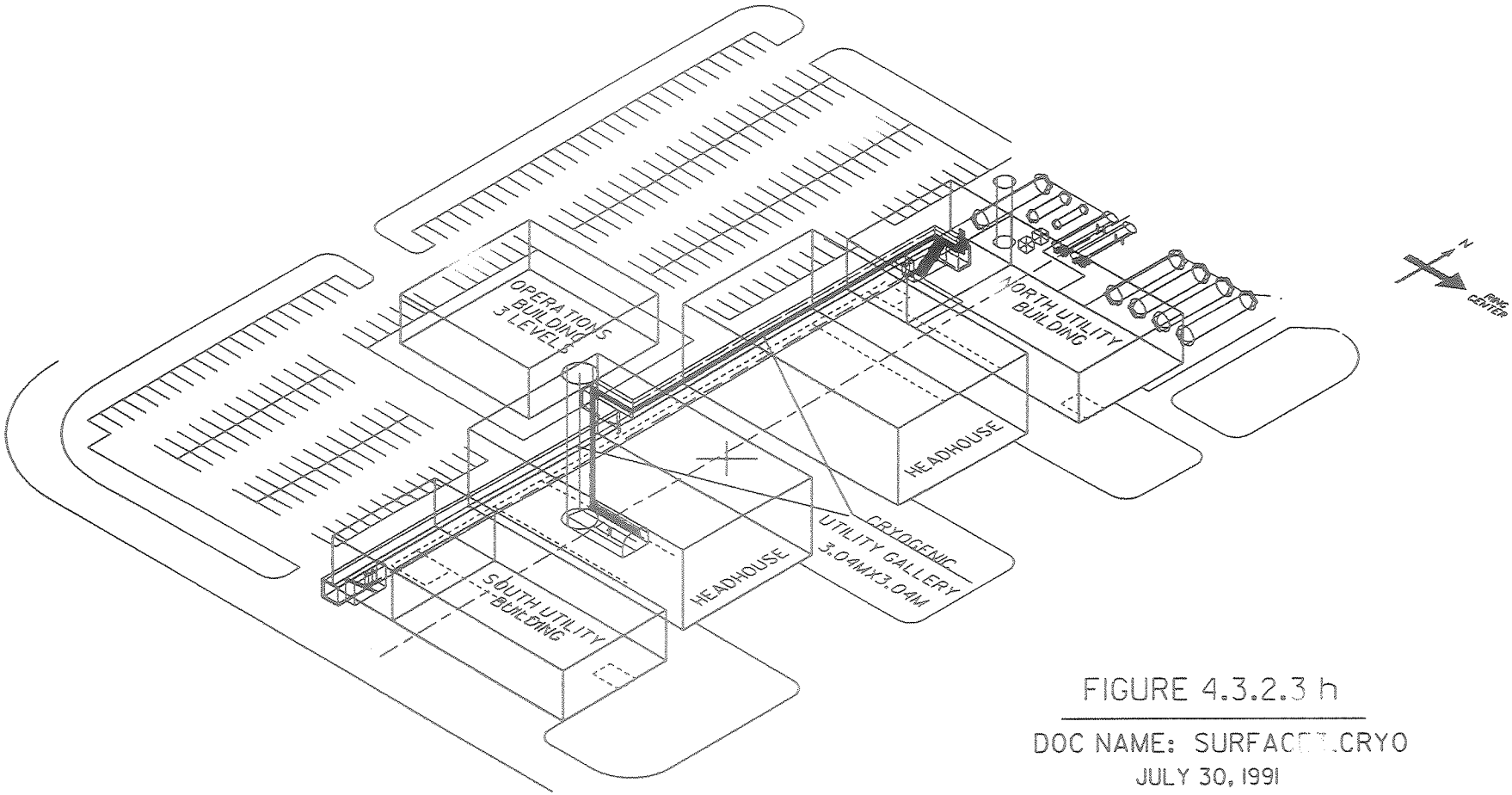

FIGURE 4.3.2.3 h

DOC NAME: SURFACE.CRYO

JULY 30, 1991

CROSS SECTION OF CRYOGENIIC PIPING AND UTILITIES TUNNEL

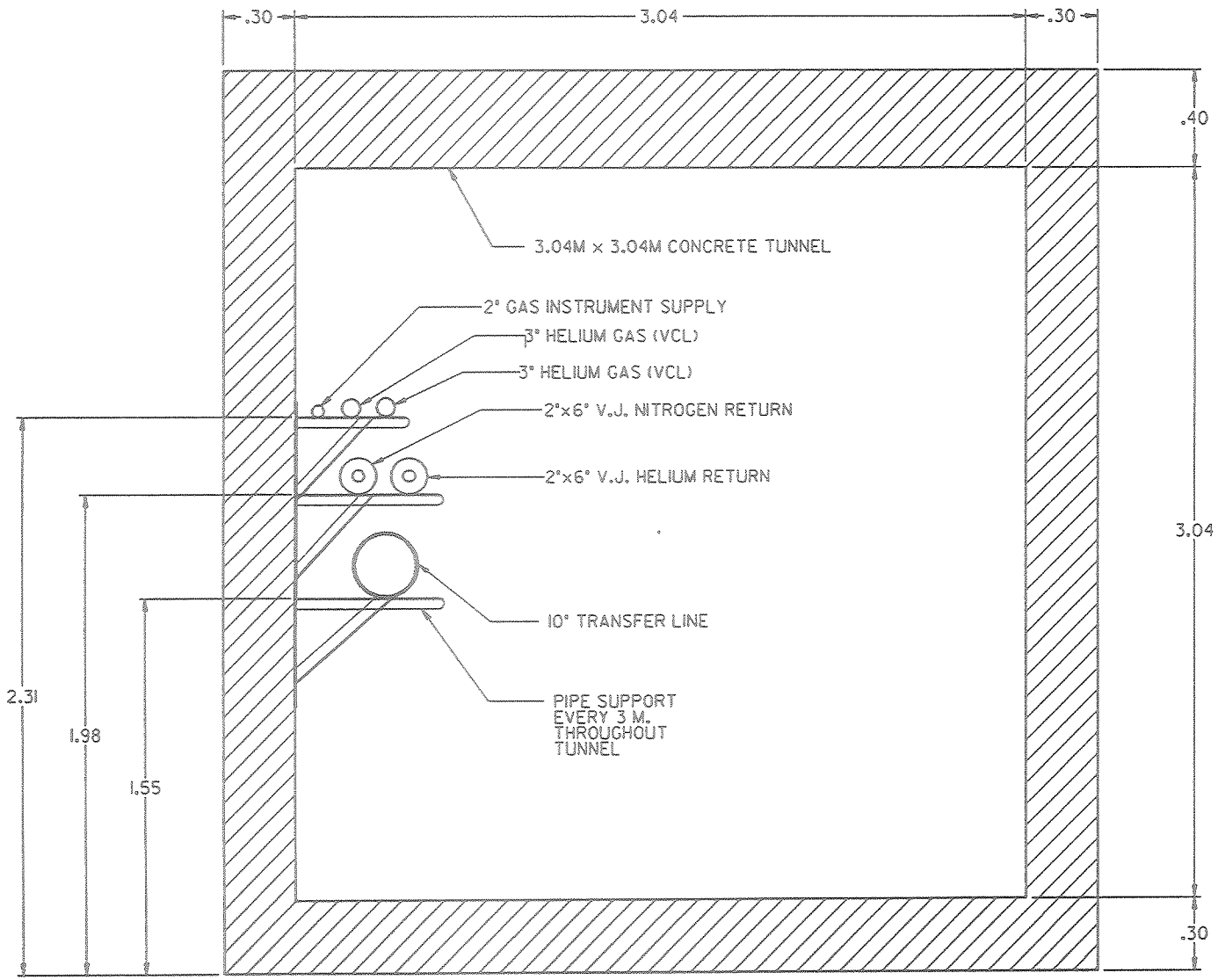

FIGURE 4.3.2.3 i

DOC NAME TUNNEL.CROSS

JULY 30, 1991

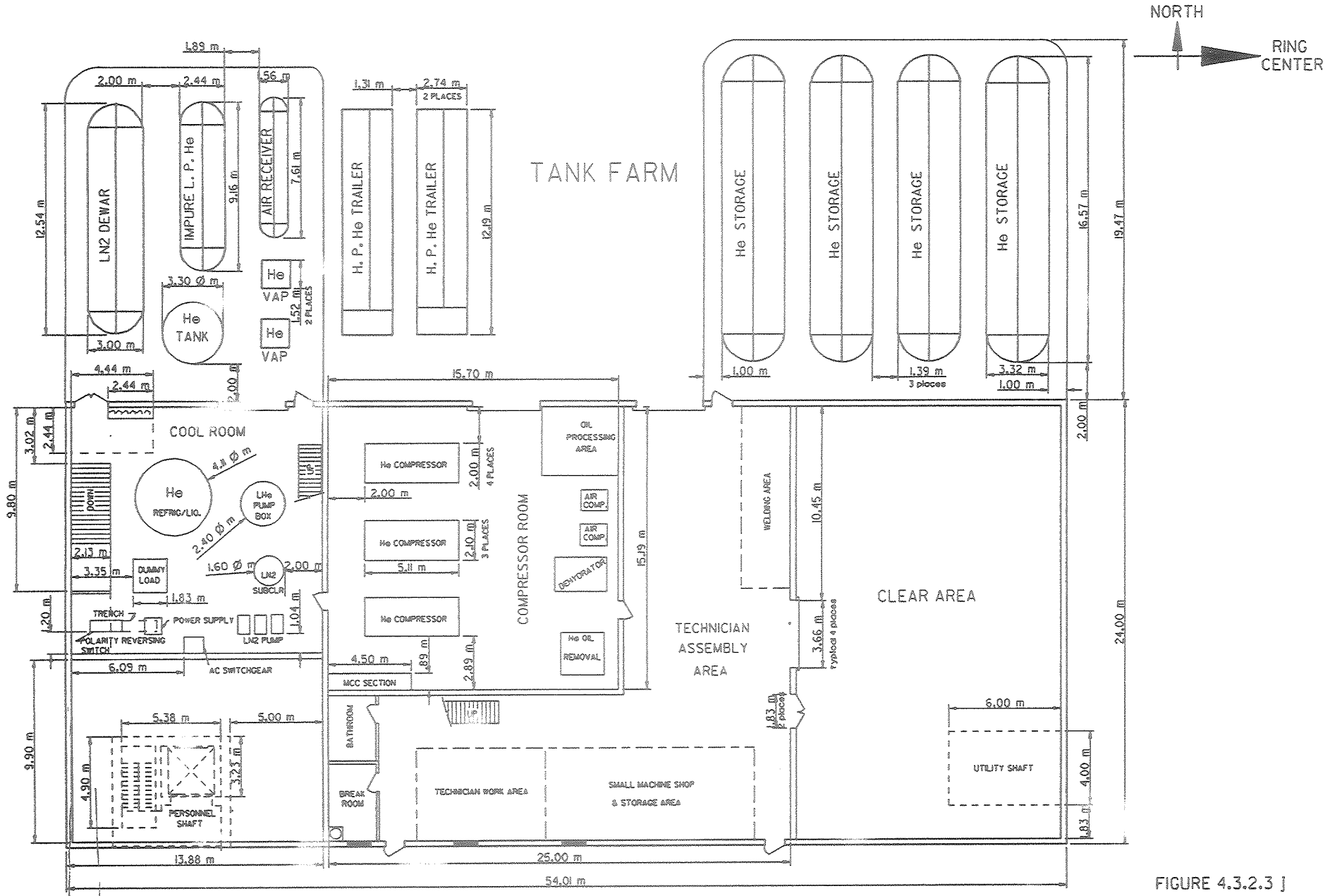

FIGURE 4.3.2.3 J

CRYO EQUPT LAYOUT IN NORTH UTILITY BLDG IST FLOOR

DWG # R20000314

July 26, 1991

Cryohomed

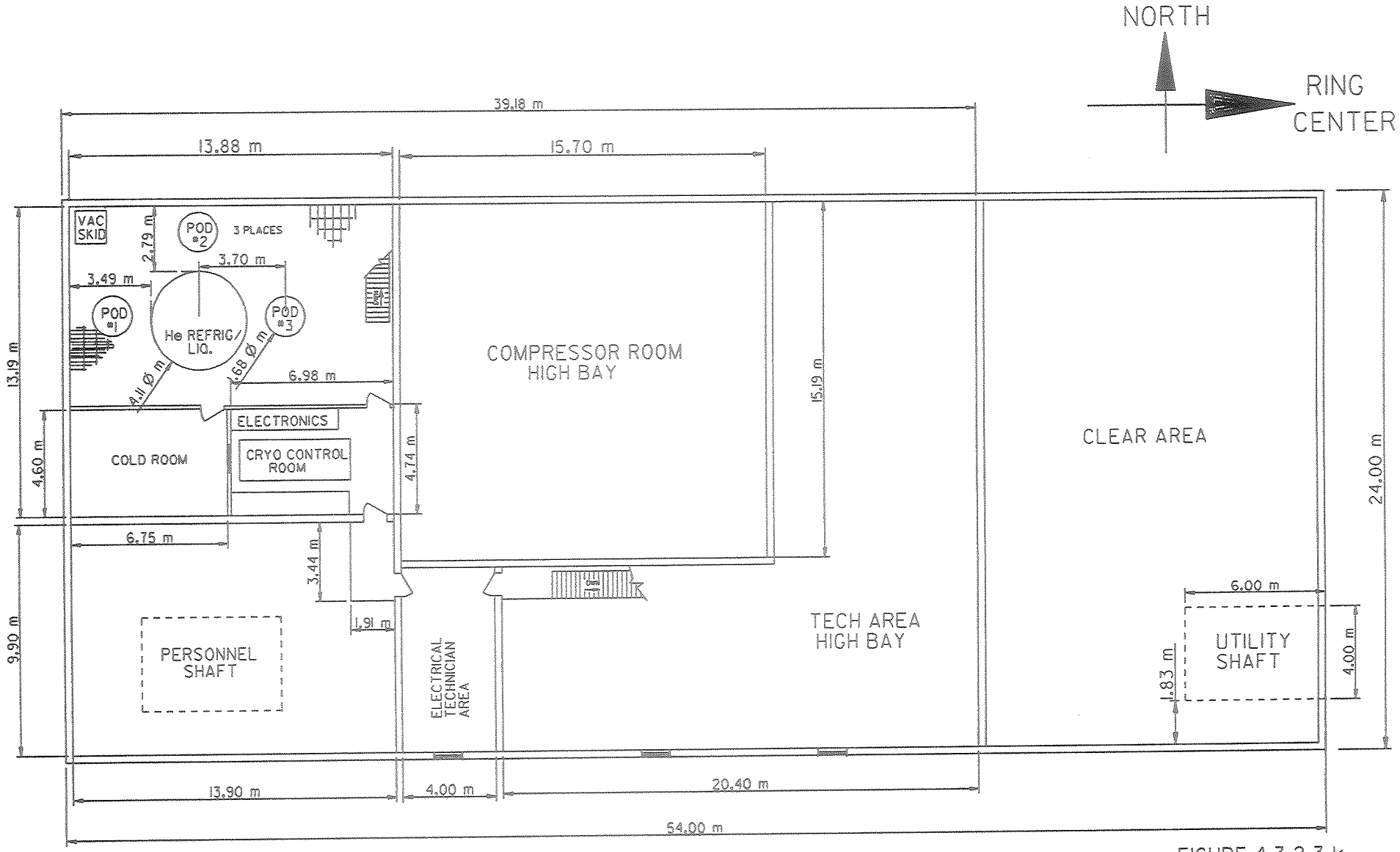

FIGURE 4.3.2.3 k

CRYO EQUPT LAYOUT IN NORTH UTILITY BLDG 2ND FLOOR

DWG # R20000315

JULY 30, 1991

REVISIONS				
ZONE	REV	DESCRIPTION	DATE	APPROVED

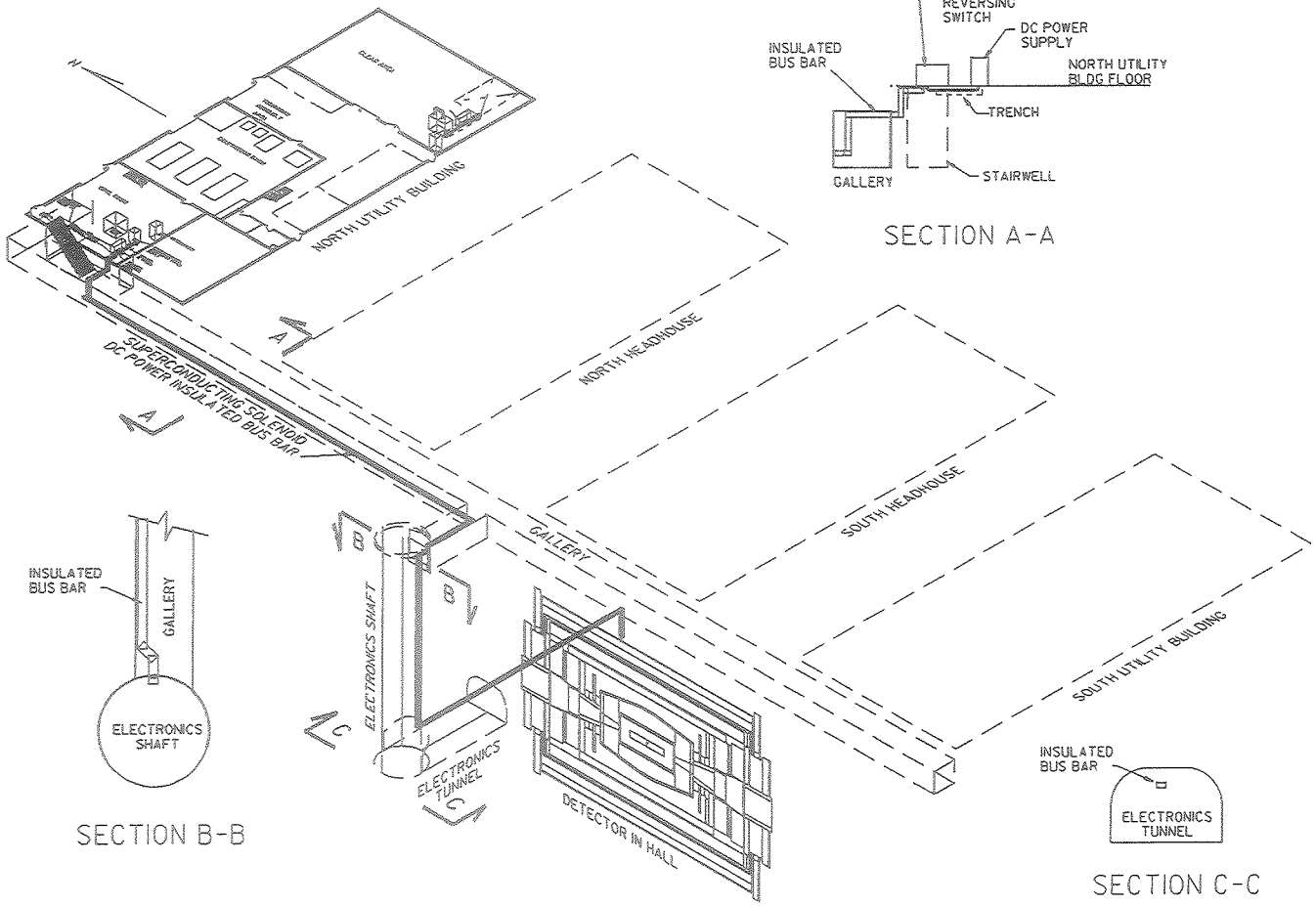

QTY	QTY	QTY	PART NUMBER	DESCRIPTION	CAGECO	ZONE	ITEM

LIST OF MATERIALS / PARTS LIST

REF ONLY-NOT TO BE MAINTAINED

DASH NO.	NEXT ASSY.	USED ON
APPLICATION		

UNLESS OTHERWISE SPECIFIED DIMENSIONS ARE IN MILLIMETERS

TOLERANCE OF WHOLE NUMBERS ±0.5

TOLERANCE OF DECIMALS

.X ±0.5 | .XX ±0.13 | ∠ ±.5°

1. BREAK ALL SHARP EDGES 0.5 MAX.
2. DO NOT SCALE THIS DRAWING.
3. DIM. TO ANSI Y14.5 - 1982.
4. MAX. ALL MACH. SURFACES.

DRAWN	J. EGAN	DATE 07-30-91
CHKR		
APPD		
APPD		
APPD		
APPD		
APPD		
APPD		

CONTRACT NO. DE-AC02-89ER40486

SSC SUPERCONDUCTING SUPER COLLIDER LABORATORY 2550 BECKLEYMEADE AVE. SUITE 100 DALLAS, TEXAS 75237-3946

SUPERCONDUCTING SOLENOID DC POWER SUPPLY - ISOMETRIC

SIZE	CAGECO	DRAWING NO	REV
C		R20000391	A

WBS

SCALE | WEIGHT | SHEET OF

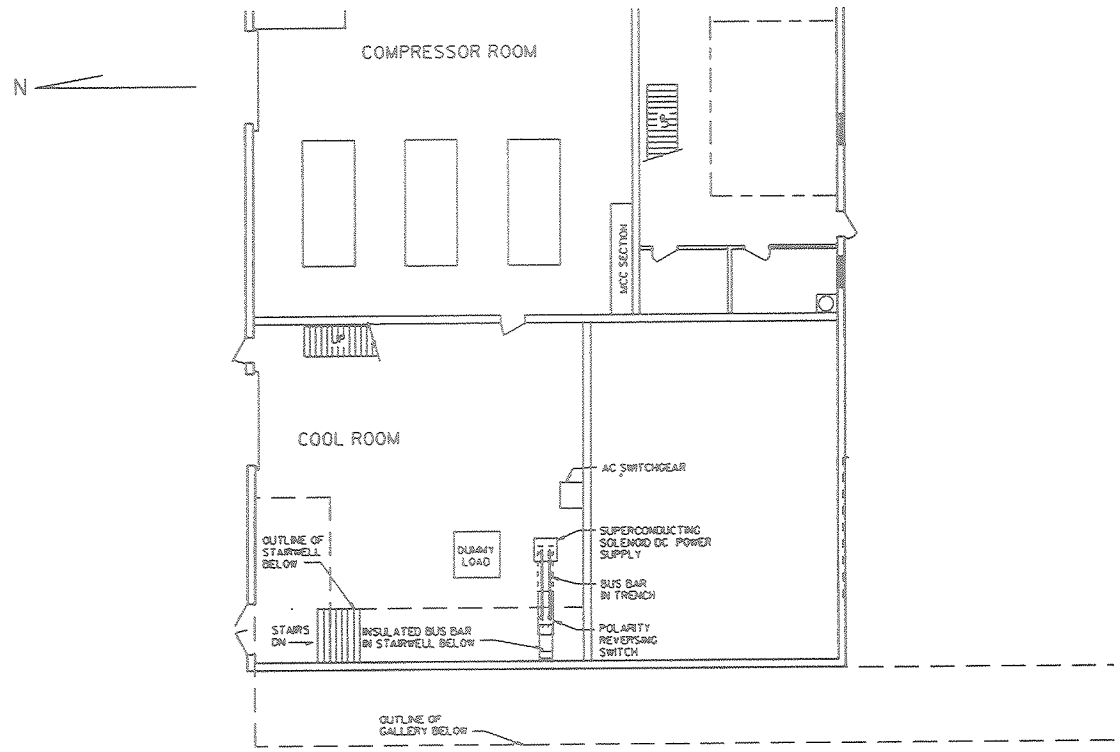

PARTIAL GROUND FLOOR PLAN
NORTH UTILITY BUILDING

REVISIONS				
ZONE	REV	DESCRIPTION	DATE	APPROVED

QTY	QTY	QTY	PART NUMBER	DESCRIPTION	CAGECO	ZONE	ITEM

LIST OF MATERIALS / PARTS LIST

REF ONLY-NOT TO BE MAINTAINED

DASH NO.	NEXT ASSY.	USED ON
APPLICATION		

UNLESS OTHERWISE SPECIFIED DIMENSIONS ARE IN MILLIMETERS

TOLERANCE OF WHOLE NUMBERS ±0.5

TOLERANCE OF DECIMALS

.X ±0.5 | .XX ±0.13 | ∠ ±0.5°

1. BREAK ALL SHARP EDGES 0.5 MAX.
2. DO NOT SCALE THIS DRAWING.
3. DIM. TO ANSI Y14.5 - 1982.
4. MAX. ALL MACH. SURFACES.

DRAWN	J. EGAN	DATE 01-29-91
CHKR		
APPD		
APPD		
APPD		
APPD		
APPD		
APPD		
CONTRACT NO.	DE-AC02-89ER40486	

SSC SUPERCONDUCTING SUPER COLLIDER LABORATORY

SUPERCONDUCTING
SOLENOID DC POWER
SUPPLY

SIZE	CAGECO	DRAWING NO	REV
C		R20-000390	A

WBS

SCALE NONE | WEIGHT | SHEET OF

CHIMNEY

Design Basis

1. Aluminum construction
2. ASME Section VIII, Div 1
3. One chimney
4. Located on cylindrical shell at end of cryostat

Topics 2 : Andy Stefanik

REV.	DESCRIPTION	DRAWN	DATE
		APPROVED	DATE

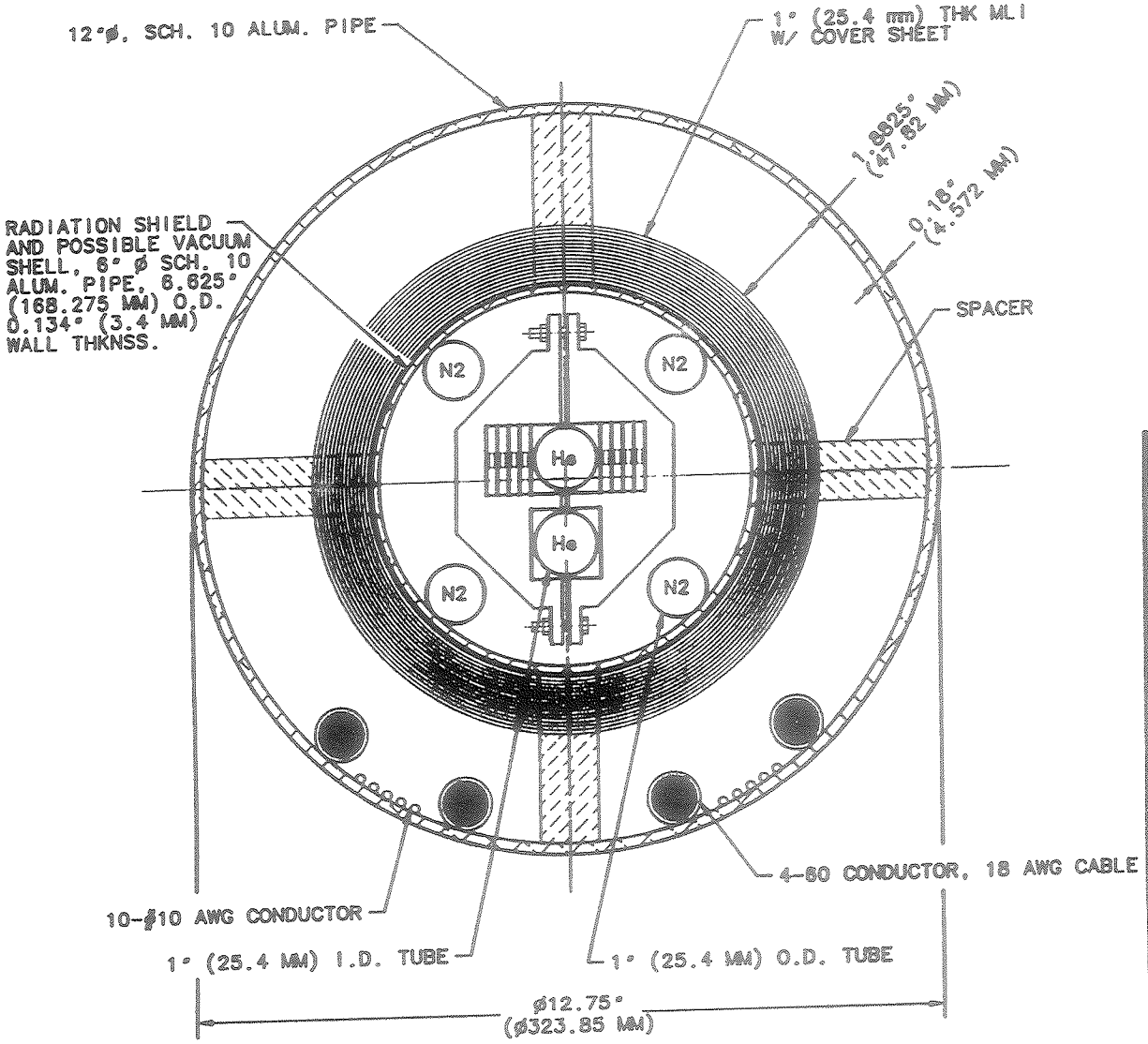

ITEM NO.	PART NO.	DESCRIPTION OR SIZE	QTY. REQ.
		PARTS LIST	

UNLESS OTHERWISE SPECIFIED			ORIGINATOR	A. STEFANIK	2/91
FRACTIONS	DECIMALS	ANGLES	DRAWN	D. FRIEND	4/8/91
±	±	±	CHECKED		
			APPROVED		

1. BREAK ALL SHARP EDGES 1/64 MAX.
2. DO NOT SCALE DRWG.
3. DIMENSIONING IN ACCORD WITH ANSI Y14.5 STD'S.

√ MAX. ALL MACHINED SURFACES

USED ON

MATERIAL

B

FERMI NATIONAL ACCELERATOR LABORATORY
UNITED STATES DEPARTMENT OF ENERGY

SOLENOIDAL DETECTOR COLLABORATION
SUPERCONDUCTING SOLENOID; TYPE I
CHIMNEY CROSS SECTION; 12" NOM.

SCALE	DRAWING NUMBER	SHEET NO.	REV.
HALF		1	

REV.	DESCRIPTION	DRAWN	DATE
		APPROVED	DATE

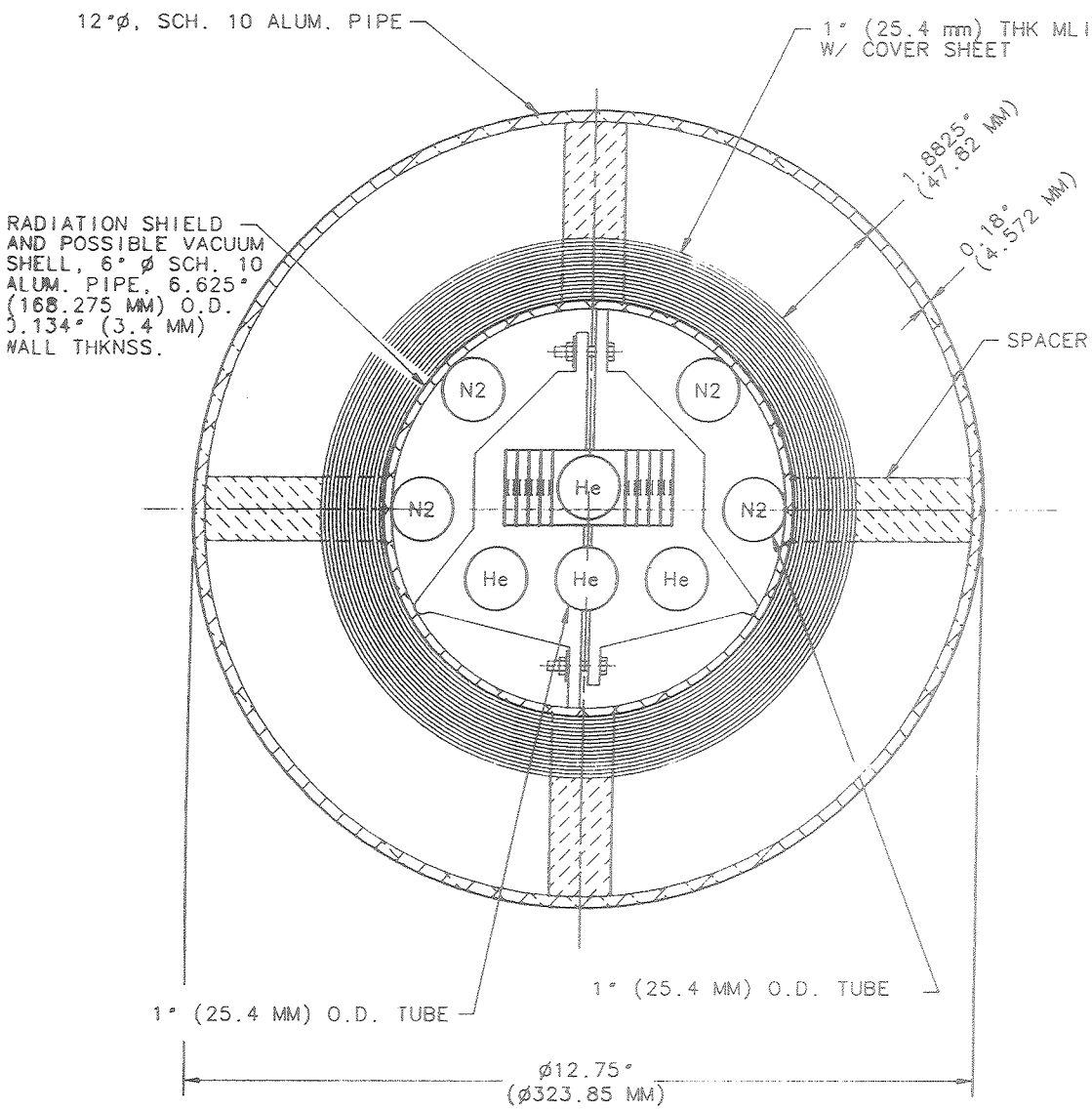

ITEM NO.	PART NO.	DESCRIPTION OR SIZE	QTY. REQ.

PARTS LIST

UNLESS OTHERWISE SPECIFIED			ORIGINATOR	A. STEFANIK	2/91
FRACTIONS	DECIMALS	ANGLES	DRAWN	D. FRIEND	4/8/91
±	±	±	CHECKED		
1. BREAK ALL SHARP EDGES 1/64 MAX. 2. DO NOT SCALE DRWG. 3. DIMENSIONING IN ACCORD WITH ANSI Y14.5 STD'S.			APPROVED		
			USED ON		
√ MAX. ALL MACHINED SURFACES			MATERIAL		B

FERMI NATIONAL ACCELERATOR LABORATORY
UNITED STATES DEPARTMENT OF ENERGY

SOLENOIDAL DETECTOR COLLABORATION
SUPERCONDUCTING SOLENOID; TYPE I
CHIMNEY CROSS SECTION; 12" NOM.

SCALE	DRAWING NUMBER	SHEET NO.	REV.
NONE		1	

A

E

1 2 3 4

CHIMNEY

Current Design

1. Vacuum vessel relieving pressure is 0.1 psig

   Current design pressure is 0.6 psig

2. High vacuum throughput appears to be sufficient when compared to CDF leak

CHIMNEY

Options

1. Square cross section
2. Located away from ends
3. Multiple chimneys
4. Notch either one or two modules for chimney
5. Stainless steel construction
6. End ring connection
7. Thermosiphon cooling

Fermilab

SSC DETECTOR SOLENOID DESIGN NOTE #117

TITLE: High Vacuum Pumping of a Helium or Nitrogen Leak in the SDC Solenoid Vacuum Vessel (Cylindrical Chimney)

AUTHOR: A. M. Stefanik A.M. Stefanik

DATE: October 15, 1990

ABSTRACT: This Design Note contains the high vacuum pumping calculations for the SDC solenoid vacuum vessel. The calculation uses the cylindrical chimney dimensions given in Design Note 115.

SUMMARY: The calculations indicate the following throughputs for conductance values at 300 K and 80 K:

1.0 6" turbomolecular pump with 1,100 l/s helium pumping speed:

	Throughput (Atm cc/sec)	
	Helium	Nitrogen
1.1 At 2.2 x (10**-5) torr (CDF magnet trip point):		
At 300 K:	3.5 x (10**-3)	1.5 x (10**-3)
At 80 K:	2.0 x (10**-3)	0.8 x (10**-3)
1.2 At 5.5 x (10**-7) torr:		
At 300 K:	9.0 x (10**-5)	3.7 x (10**-5)
At 80 K:	4.9 x (10**-5)	1.9 x (10**-5)

2.0 4" turbomolecular pump with 390 l/s helium pumping speed:

	Throughput (Atm cc/sec)	
	Helium	Nitrogen
2.1 At 2.2 x (10**-5) torr (CDF magnet trip point):		
At 300 K:	2.7 x (10**-3)	1.2 x (10**-3)
At 80 K:	1.6 x (10**-3)	0.7 x (10**-3)

2.2 At 5.5 x (10**-7) torr:

At 300 K:	6.8 x (10**-5)	3.0 x (10**-5)
At 80 K:	4.0 x (10**-5)	1.7 x (10**-5)

CONCLUSION: High vacuum throughput is sufficient for reasonable helium or nitrogen leak rates.

For comparison, the CDF helium leak rate at ambient temperature was 1 x (10**-9) Atm cc/s. The leak rate with liquid helium was determined to be about 1.5 x (10**-7) Atm cc/s.

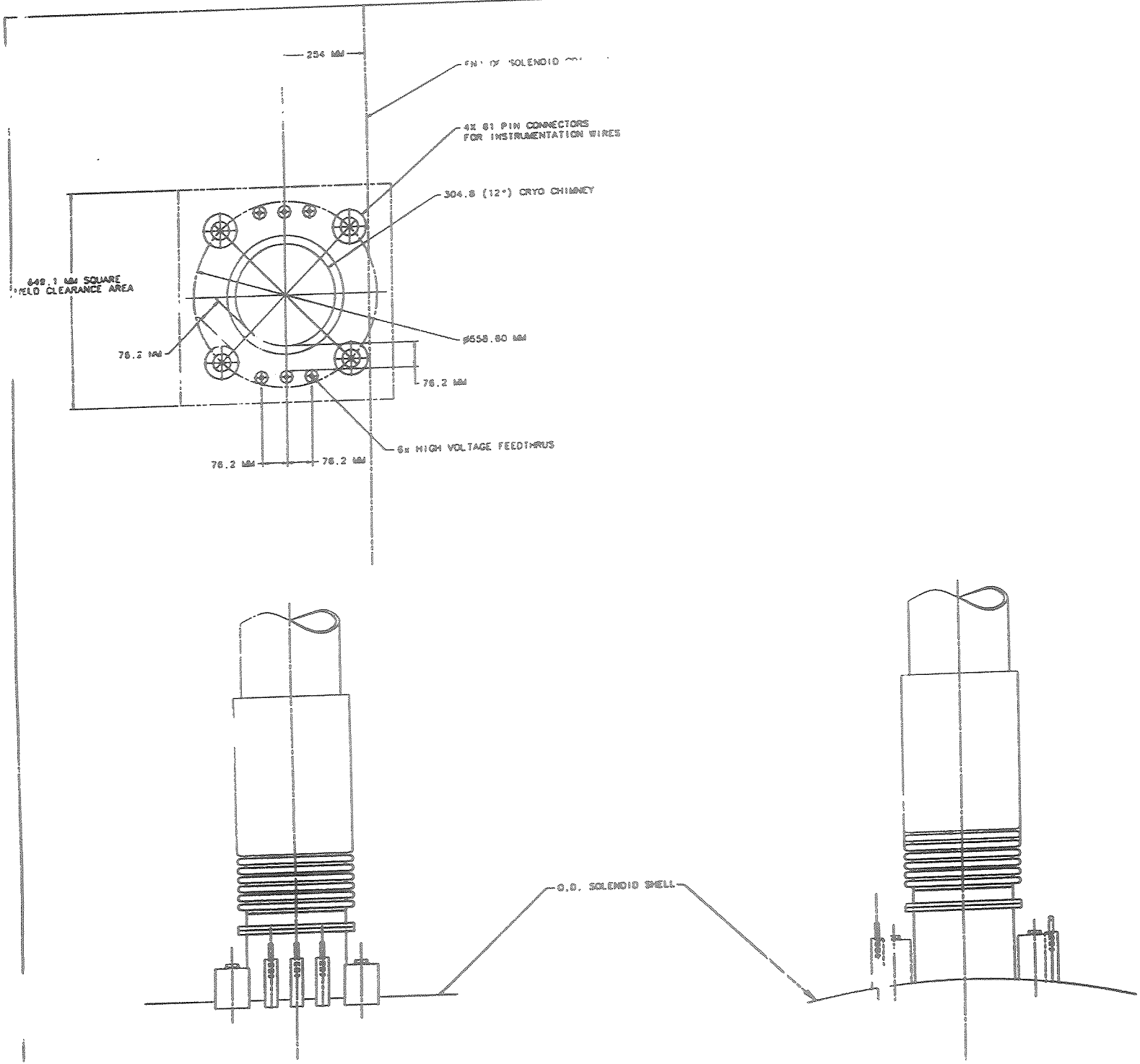

RESEARCH DIVISI.
SOLENOID DETECTOR COLLABORATION
CRYO CHIMNEY & CONN. LOCATIONS

END OF HADRON CALORIMETER SHELL
AND END OF SOLENOID SHELL
SOLENOID SHELL
O.D.
"E-M"
8X HIGH VOLTAGE FEEDTHRUS
(FOR INSTRUMENTATION WIRES)
4X 01 PIN CONNECTORS
(FUTURE)
BELLOWS (FUTURE)
(FUTURE)
CAP 8 1/2" I.D. PIPE - 252 8/16" O.D. TUBE
(FUTURE)
HADRON CALORIMETER SHELL
(CENTERLINE OF CHAMBER)
BARREL HADRON CALORIMETER
AVERAGE CHAMBER AT THICKNESS
CLEARANCE TO EDGE (REF.-FROM)
CHAO CHINA & CORP. FOCALTORS
CHAO CHINA & CORP. COTTAGE
BIBLIOGRAPHY
BIBLIOGRAPHY

FERMILAB
ENGINEERING NOTE

SECTION	PROJECT	SERIAL-CATEGORY	PAGE
	SDC		1

SUBJECT: SUMMARIZE MOVEMENTS FOR CHIMNEY BELLOWS.

NAME: AMS

DATE: 7/8/91

REVISION DATE:

INFO FROM LARRY BARTOSZEK ON CALORIMETER MOVEMENTS:

1. VERTICAL. ±1" (SAME MOVEMENT ON BOTH SIDES)
2. HORIZONTAL ROCKING: ±1" (±1" ON EACH SIDE)
3. AXIAL: NONE AFTER FINAL INSTALLATION.
   ALLOW FOR ± 1/2"
4. MOVEMENT WHEN ENERGIZED: MUCH LESS THAN 1"
   ASSUME 1/2" VERTICALLY
5. JACKS FOR THE CALORIMETER SIT ON THE MUON IRON.

INFO FROM DAVE EARTLY ON MUON IRON MOVEMENTS:

1. MAGNET HOOP EFFECT: TOP QUADRANT RISES UPWARD
   1/32" TO 1/16". PLAN ON 1/8".
2. WEIGHT EFFECTS: CONSTANT
3. ROTATION ABOUT THE BEAMLINE: HOPING FAR ≤ ± 1/4"
   PLAN ON 1/2".

OTHER

1. THERMAL CONTRACTION

540280

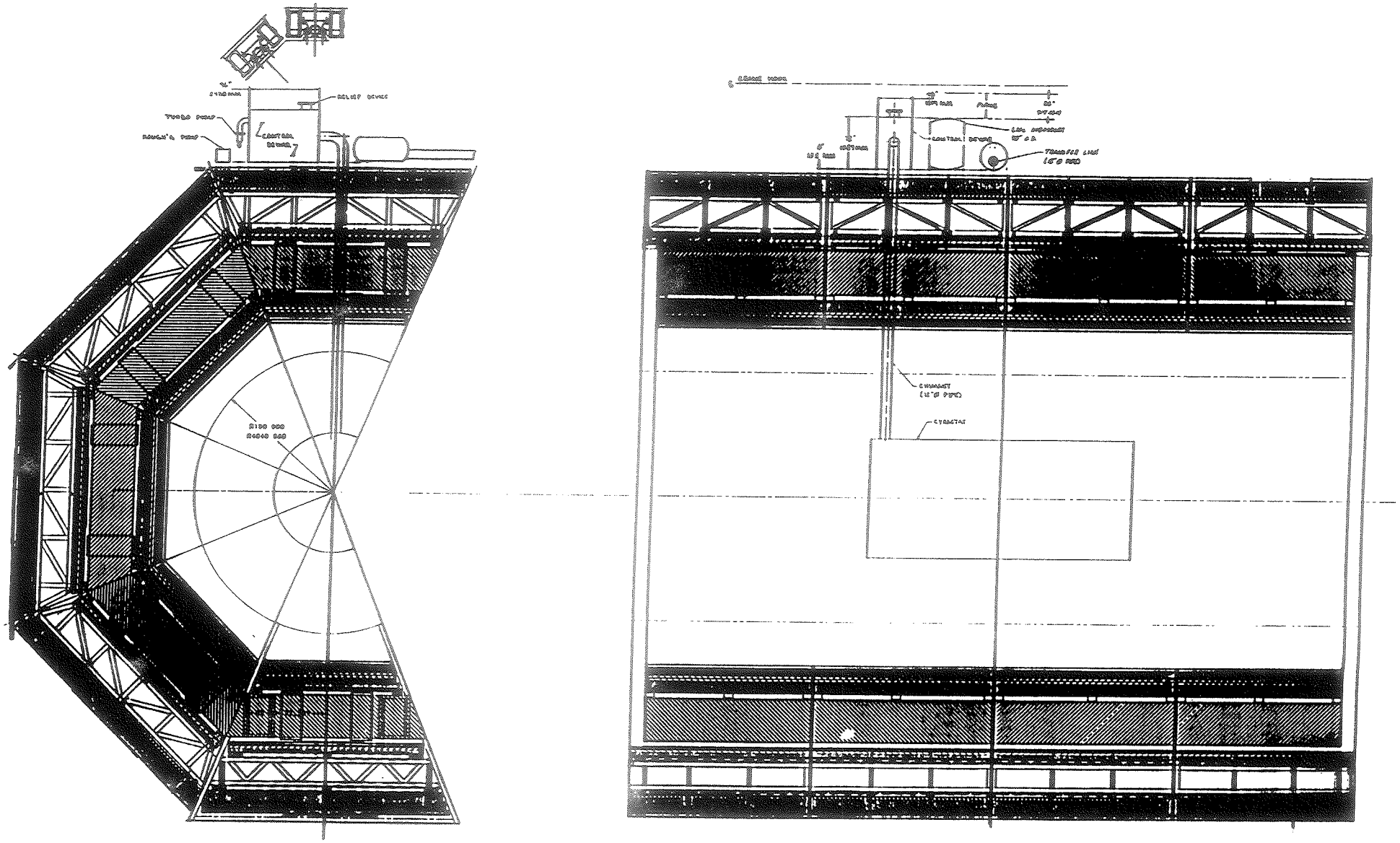

DET. #2 DET. #1 DET. #3

SDC 178

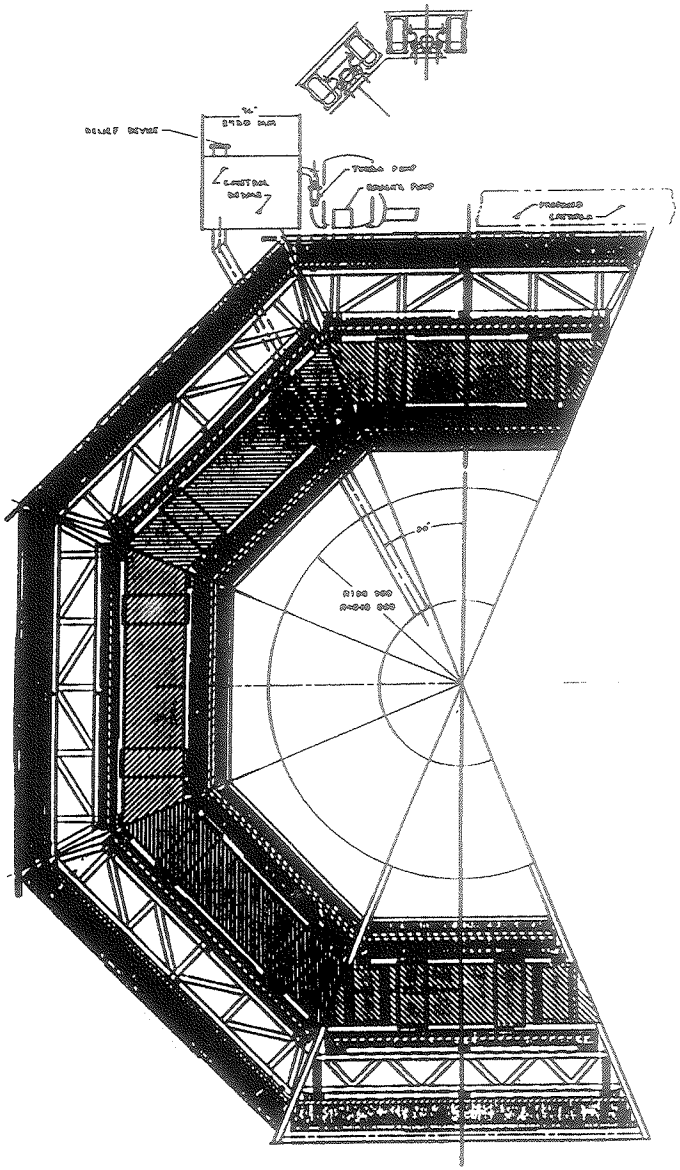

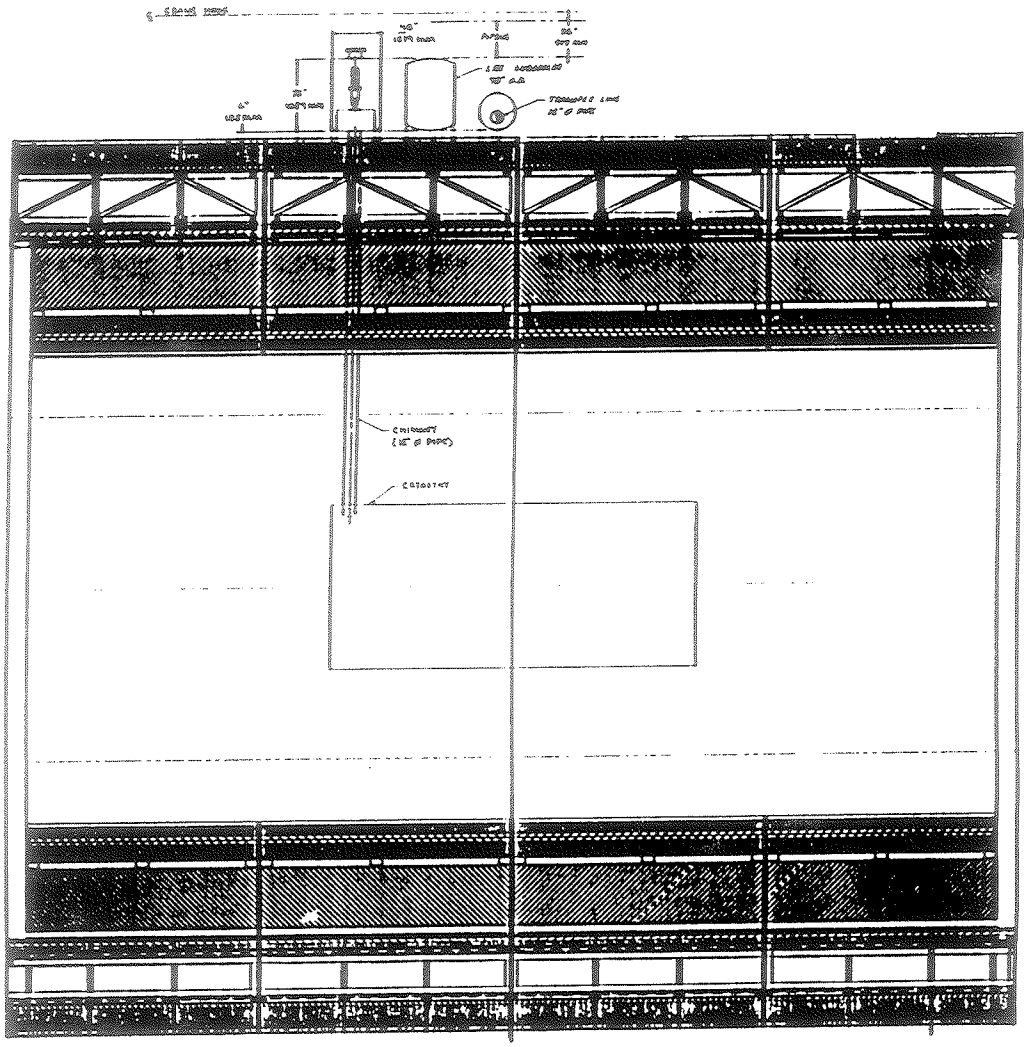

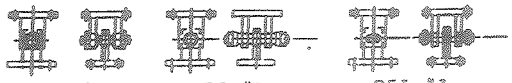

DET. #2 DET. #1 DET. #3

SDC 1/B

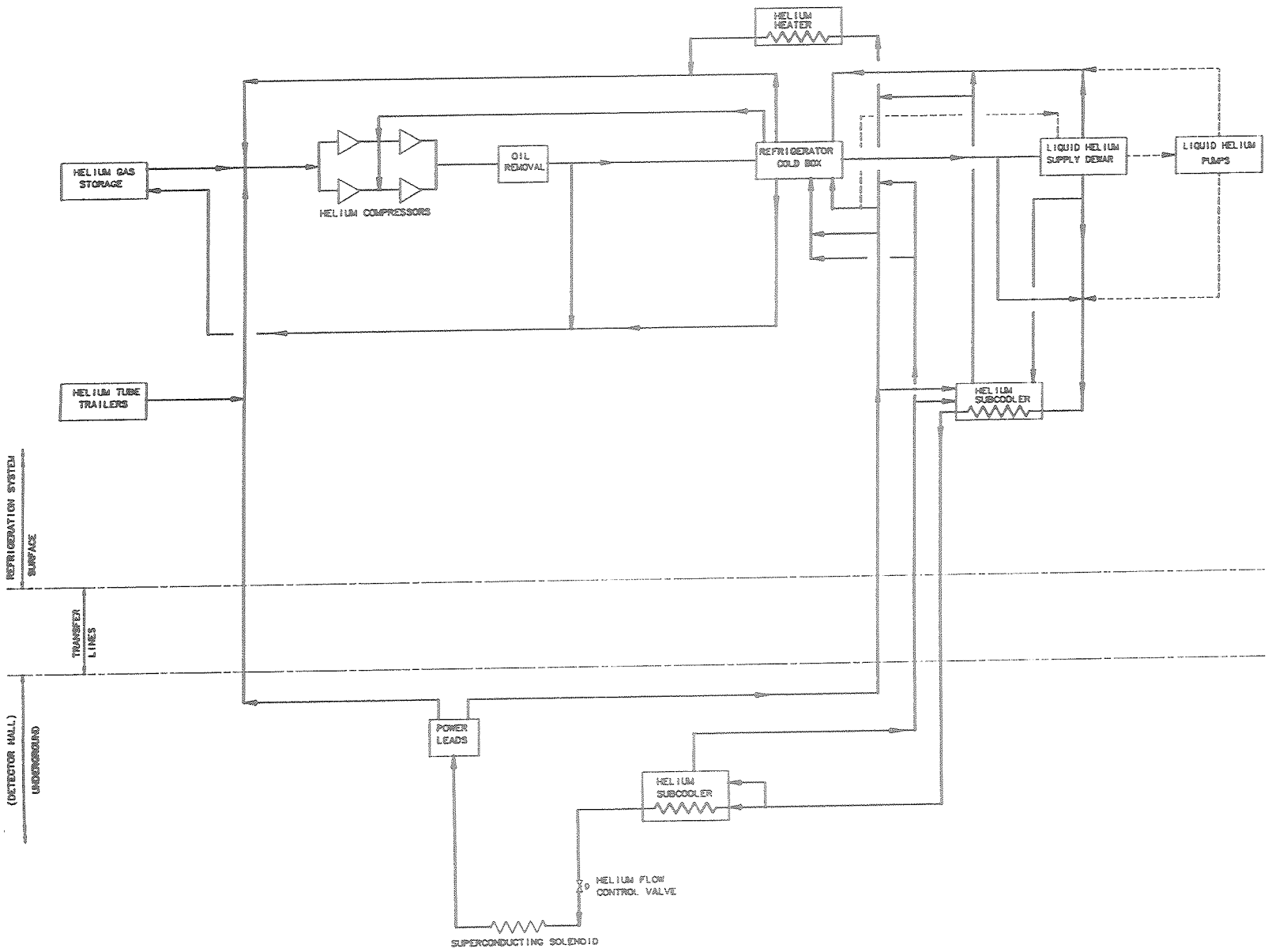

NOTE: THE OPTIONAL PUMP SYSTEM IS DRAWN WITH DASHED LINES.

UTILITIES PROVIDED BY SDC

1. ELECTRIC POWER
2. COOLING WATER
3. LIQUID NITROGEN

AUXILIARY EQUIPMENT PROVIDED BY RSC

1. COMPRESSOR OIL WATER REMOVAL
2. INSTRUMENT AIR

REV.	DESCRIPT	APPROVED	DATE

ITEM NO.	PART NO.	DESCRIPTION OR SIZE	QTY. REQD.

PARTS LIST

ORIGINATOR	A.M. STEFANIK	3/91
DRAWN	D. FRIDO	4/8/91
CHECKED		
APPROVED		
USED ON		

MATERIAL

D

FERMI NATIONAL ACCELERATOR LABORATORY
UNITED STATES DEPARTMENT OF ENERGY

SOLENOIDAL DETECTOR COLLABORATION
SUPERCONDUCTING SOLENOID
HELIUM SYSTEM: FLOW DIAGRAM

SCALE	DRAWING NUMBER	SHEET NO.	REV.
NONE	MD-267001	1	

MD267001.DWG2

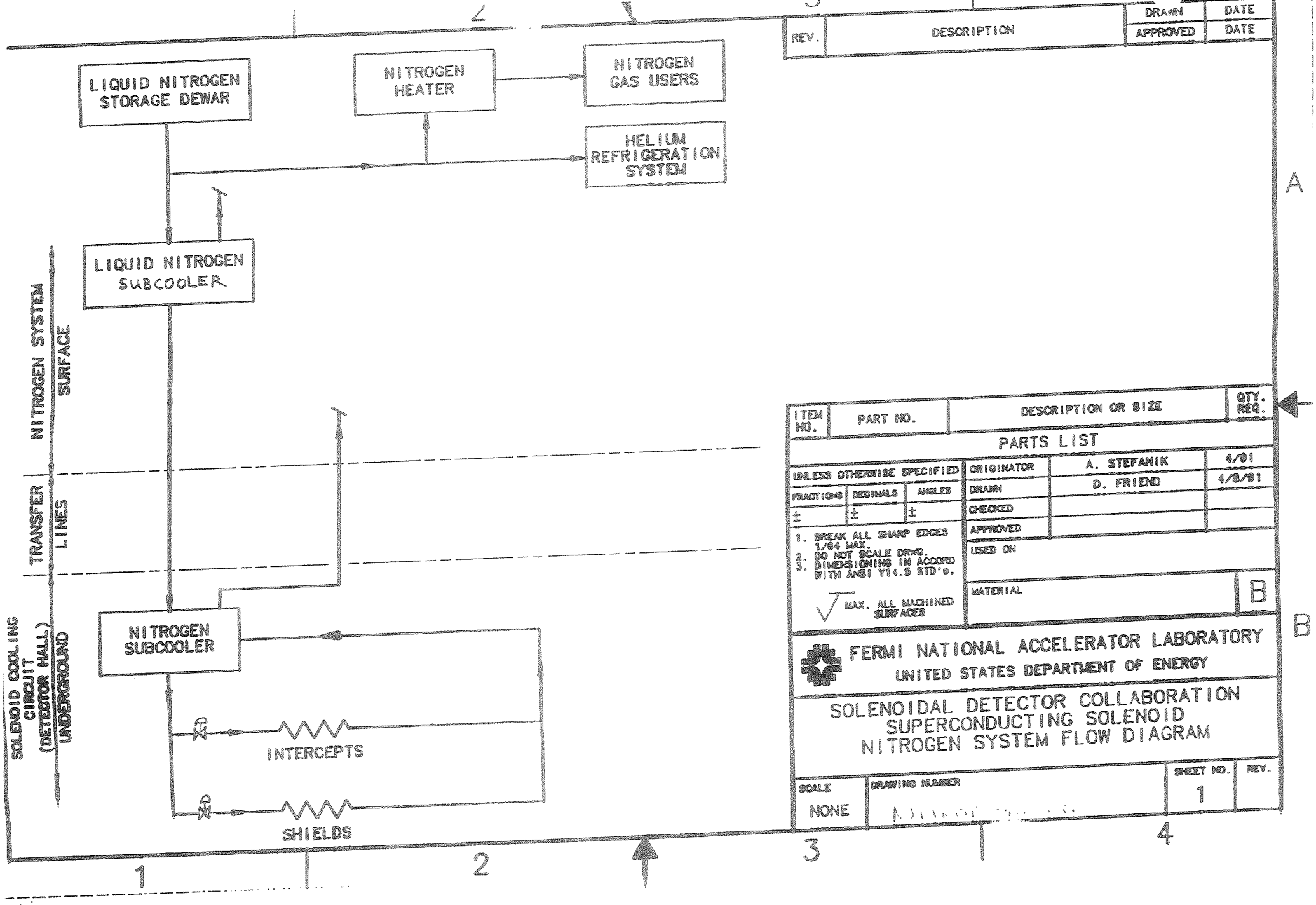
LIQUID NITROGEN STORAGE DEWAR
NITROGEN HEATER
NITROGEN GAS USERS
HELIUM REFRIGERATION SYSTEM
LIQUID NITROGEN SUBCOOLER
NITROGEN SUBCOOLER
INTERCEPTS
SHIELDS
NITROGEN SYSTEM
SURFACE
TRANSFER LINES
SOLENOID COOLING CIRCUIT (DETECTOR HALL)
UNDERGROUND
REV.
DESCRIPTION
DRAWN
DATE
APPROVED
DATE
ITEM NO.
PART NO.
DESCRIPTION OR SIZE
QTY. REQ.
PARTS LIST
UNLESS OTHERWISE SPECIFIED
FRACTIONS
DECIMALS
ANGLES
1. BREAK ALL SHARP EDGES 1/64 MAX.
2. DO NOT SCALE DRWG.
3. DIMENSIONING IN ACCORD WITH ANSI Y14.5 STD'S.
MAX. ALL MACHINED SURFACES
ORIGINATOR
A. STEFANIK
4/01
DRAWN
D. FRIEND
4/8/01
CHECKED
APPROVED
USED ON
MATERIAL
B
FERMI NATIONAL ACCELERATOR LABORATORY
UNITED STATES DEPARTMENT OF ENERGY
SOLENOIDAL DETECTOR COLLABORATION
SUPERCONDUCTING SOLENOID
NITROGEN SYSTEM FLOW DIAGRAM
SCALE
NONE
DRAWING NUMBER
SHEET NO.
1
REV.
A
B
1
2
3
4

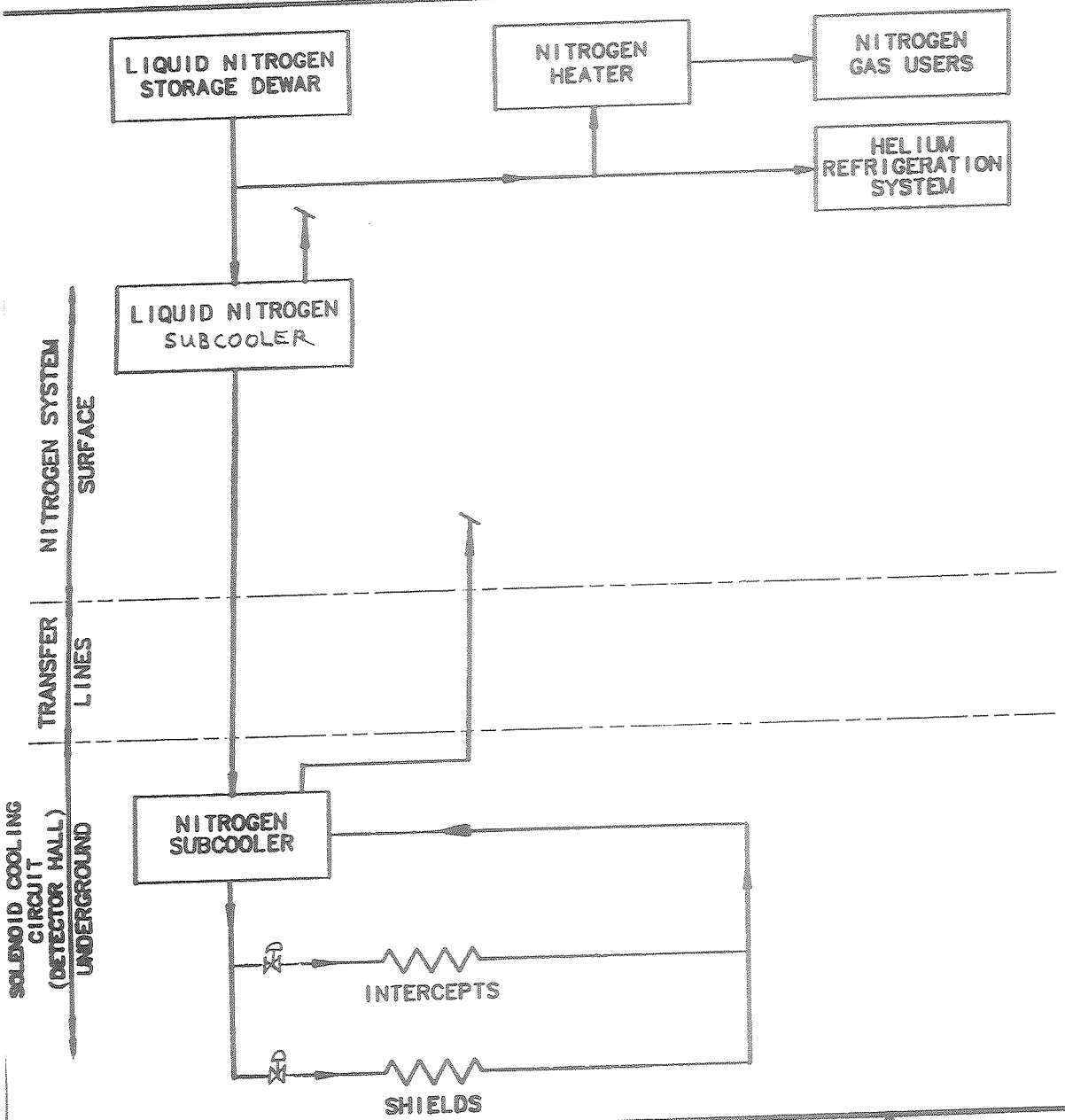

REV.	DESCRIPTION	DRAWN	DATE
		APPROVED	DATE

ITEM NO.	PART NO.	DESCRIPTION OR SIZE	QTY. REQ.

PARTS LIST

UNLESS OTHERWISE SPECIFIED			ORIGINATOR	A. STEFANIK	4/91
FRACTIONS	DECIMALS	ANGLES	DRAWN	D. FRIEND	4/8/91
±	±	±	CHECKED		
			APPROVED		

1. BREAK ALL SHARP EDGES 1/64 MAX.
2. DO NOT SCALE DRWG.
3. DIMENSIONING IN ACCORD WITH ANSI Y14.5 STD'S.

√ MAX. ALL MACHINED SURFACES

USED ON

MATERIAL

B

FERMI NATIONAL ACCELERATOR LABORATORY
UNITED STATES DEPARTMENT OF ENERGY

SOLENOIDAL DETECTOR COLLABORATION
SUPERCONDUCTING SOLENOID
NITROGEN SYSTEM FLOW DIAGRAM

SCALE	DRAWING NUMBER	SHEET NO.	REV.
NONE	[illegible]	1	

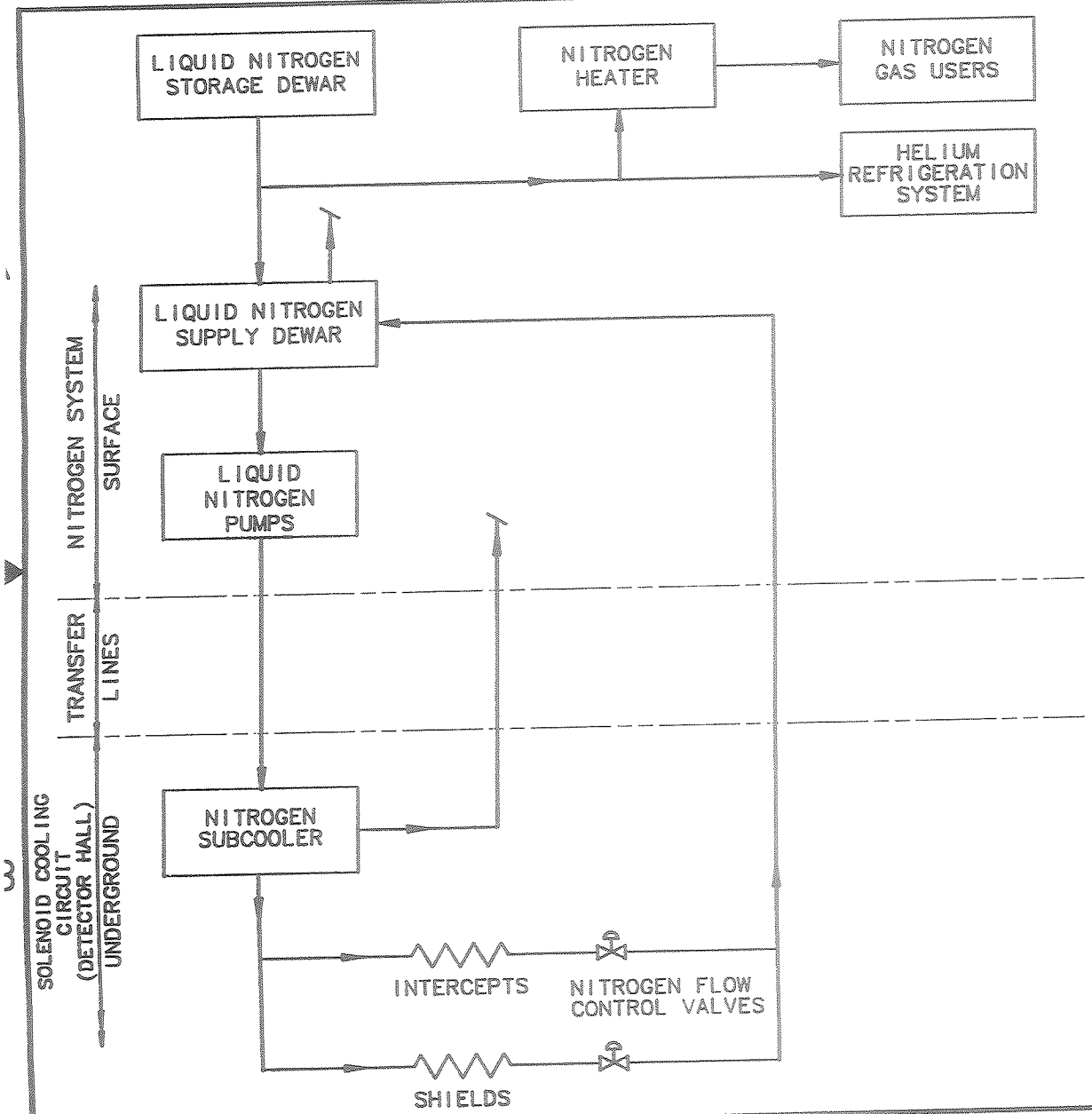

REV.	DESCRIPTION	DRAWN	DATE
		APPROVED	DATE

ITEM NO.	PART NO.	DESCRIPTION OR SIZE	QTY. REQ.

PARTS LIST

UNLESS OTHERWISE SPECIFIED			ORIGINATOR	A. STEFANIK	4/91
FRACTIONS	DECIMALS	ANGLES	DRAWN	D. FRIEND	4/8/91
±	±	±	CHECKED		
			APPROVED		

1. BREAK ALL SHARP EDGES 1/64 MAX.
2. DO NOT SCALE DRWG.
3. DIMENSIONING IN ACCORD WITH ANSI Y14.5 STD'S.

√ MAX. ALL MACHINED SURFACES

USED ON

MATERIAL

B

FERMI NATIONAL ACCELERATOR LABORATORY
UNITED STATES DEPARTMENT OF ENERGY

SOLENOIDAL DETECTOR COLLABORATION
SUPERCONDUCTING SOLENOID
NITROGEN SYSTEM FLOW DIAGRAM

SCALE	DRAWING NUMBER	SHEET NO.	REV.
NONE		1	

SDC CRYOGENIC SYSTEM
Transfer Systems

CRYOGENIC TRANSFER LINE SYSTEM

QTY.	DESCRIPTION
2	End Cans (36" Pipe x 4')
6	Expansion Boxes (24" Pipe x 4')
11	10" Transfer Line Sections

REV.	DESCRIPTION	DRAWN	DATE
		APPROVED	DATE

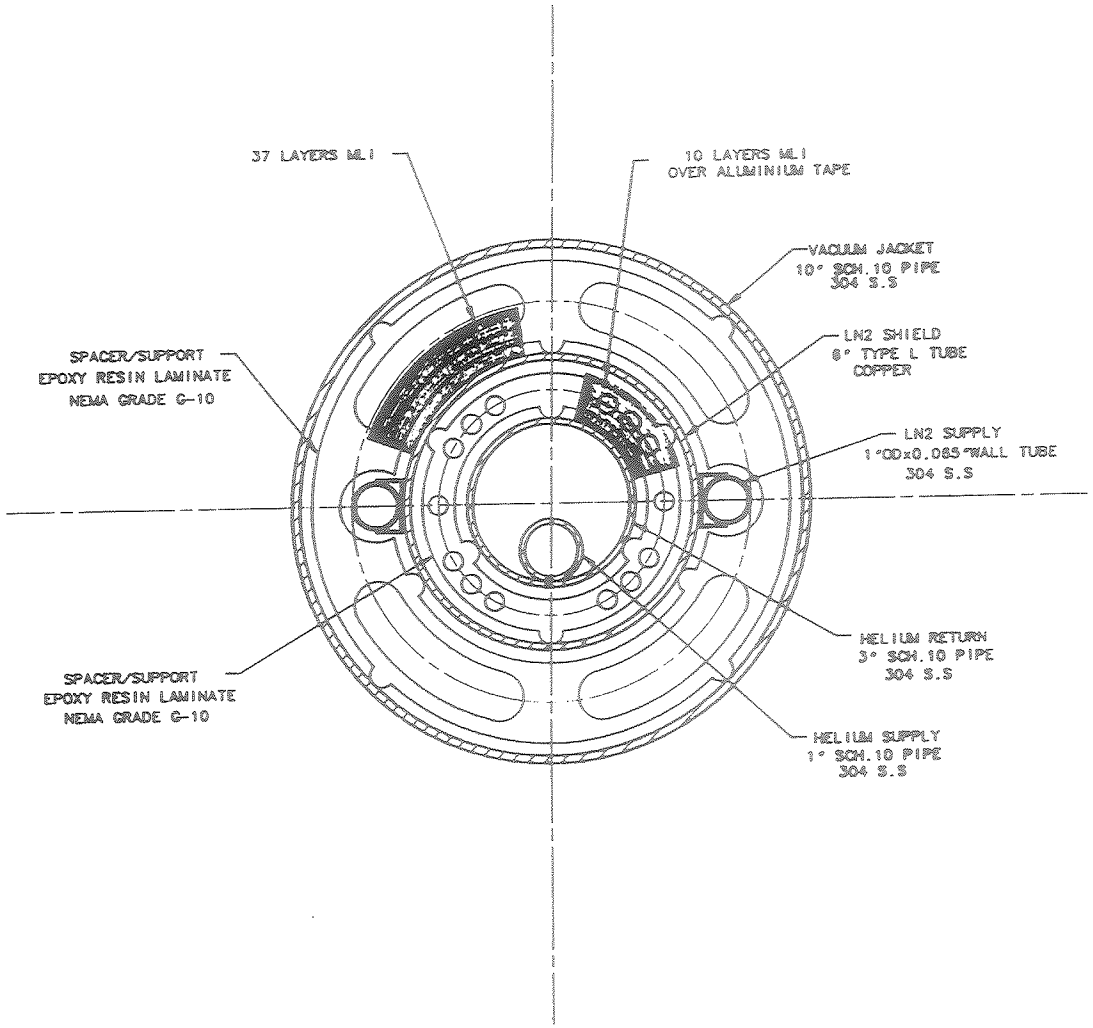

ITEM NO.	PART NO.	DESCRIPTION OR SIZE	QTY. REQ.

PARTS LIST

UNLESS OTHERWISE SPECIFIED			ORIGINATOR	A.STAFANIK	
FRACTIONS	DECIMALS	ANGLES	DRAWN	N.CADENA	8/13/91
±	±	±	CHECKED		
			APPROVED		

1. BREAK ALL SHARP EDGES 1/64 MAX.
2. DO NOT SCALE DRWG.
3. DIMENSIONING IN ACCORD WITH ANSI Y14.5 STD'S.

√ MAX. ALL MACHINED SURFACES

USED ON

MATERIAL

C

FERMI NATIONAL ACCELERATOR LABORATORY
UNITED STATES DEPARTMENT OF ENERGY

SOLENOIDAL DETECTOR COLLABORATION
CRYOGENIC TRANSFER LINE, CROSS SECTION
SUPERCONDUCTING SOLENOID

SCALE	DRAWING NUMBER	SHEET NO.	REV.
1/2=1"		1	

SDC CRYOGENICS
Transfer Systems

GAS PIPING SYSTEM

QTY.	DESCRIPTION
1	3" X 6" Pipe VJ - Cold GHe Return
1	3" x 6" Pipe VJ - Cold GN2 Return
2	2" Pipe - Lead Flow Return (with 4" Pipe VJ to Vertical Run)
1	3" Type K Copper Tube - GN2 Supply

SDC CRYOGENIC TRANSFER SYSTEM

ELECTRICAL BUS SYSTEM

QTY.	DESCRIPTION
2	3" Copper Pipe (water cooled bus)

REV.	DESCRIPTION	DRAWN	DATE
		APPROVED	DATE

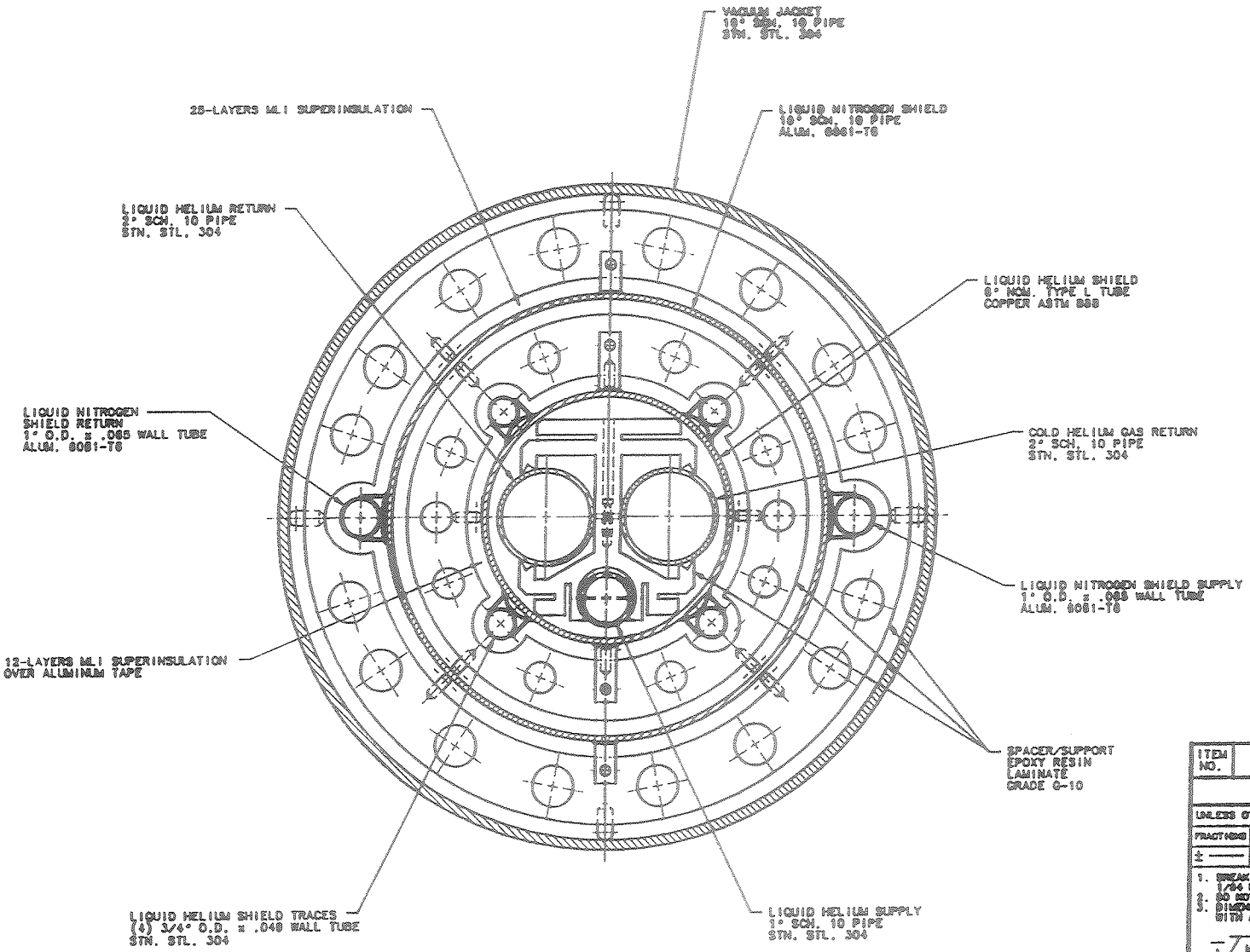

MAY 1991
CHECK PRINT

ITEM NO.	PART NO.	DESCRIPTION OR SIZE	QTY. REQ.

PARTS LIST

UNLESS OTHERWISE SPECIFIED	ORIGINATOR	A. STEFANIK	5-91
FRACTIONS / DECIMALS / ANGLES	DRAWN	B. CYKO	5-91
± —— ± —— ± ——	CHECKED		
1. BREAK ALL SHARP EDGES 1/64 MAX. 2. DO NOT SCALE DRWG. 3. DIMENSIONING IN ACCORD WITH ANSI Y14.5 STD'S.	APPROVED		
	USED ON		
√ MAX. ALL MACHINED SURFACES	MATERIAL		C

FERMI NATIONAL ACCELERATOR LABORATORY
UNITED STATES DEPARTMENT OF ENERGY

SOLENOIDAL DETECTOR COLLABORATION
CRYOGENIC TRANSFER LINE, CROSS SECTION
SUPERCONDUCTING SOLENOID

SCALE	DRAWING NUMBER	SHEET NO.	REV.
	7740 NO. 104781	1	

REFRIGERATION

Physics Design Requirements

1. Time:

   - Cooldown - 10 days
   - Quench Recovery - 4 hours

2. Reliability:

   - Reserve Capacity
   - No Operating Equipment In The Detector Hall - Pumps, Cold Compressors.

REFRIGERATION

System Configuration

1. Single loop with reserve capacity and pressure transfer (like CDF)
2. Single loop with reserve capacity and surface pumps
3. Thermosiphon at solenoid
4. Pump circuit at solenoid

REFRIGERATION

Helium Storage

LIQUID

10,000 ℓ Nominal Capacity
2.5 m Diameter x 5.5 m OAL
Horizontal or Vertical
Quantity: 1

GAS

7,100 Nm^3
3.35 m Diam. x 16.5 m OAL (MTL Size)
Horizontal
Quantity: 4

REFRIGERATION

Nitrogen Storage

LIQUID

75,000 ℓ Nominal Capacity

3 m Diameter x 16.5 m OAL

Horizontal

Quantity: 1

GAS

None

REFRIGERATION

Quench Recovery

1. 190 MJ stored energy
2. 24 Tonne cold mass
3. 75 K equilibrium temperature
4. 4 hour recovery to LHe temperature
5. 6,000 ℓ stored liquid helium
6. 60 g/s helium gas recovery system

REFRIGERATION

Refrigerator Size

1. Charging: 500 W and 35 ℓ/hr (1.2 g/s)

   Refrigeration - 620 Watts
   Liquefaction - 6.2 g/s
   Cost Factor - 1

2. Cooldown: 366 ℓ/hr (12.5 g/s)

   Refrigeration - 1,250 Watts
   Liquefaction - 12.5 g/s
   Cost Factor - 1.6

3. 4 Hour Quench Recovery: 1,756 ℓ/hr (60 g/s):

   Refrigeration - 6,000 Watts
   Liquefaction - 60 g/s
   Cost Factor - 4.9

REFRIGERATION

Refrigerator Size

4. <u>Alternative to #3</u>

- 6,000 ℓ stored liquid helium
- 60 g/s helium gas recovery system
- Reliquefy with SDC or SSCL Refrigerator
- Reliquefy in 17 hours with extra capacity of 1500 W Refrigerator

FERMILAB
ENGINEERING NOTE

SECTION	PROJECT	SERIAL-CATEGORY	PAGE
	SDC		

SUBJECT: QUENCH RECOVERY TIME

NAME: AMS

DATE: 8/1/91

REVISION DATE:

230 ℓ/hr LIQUEFACTION CAPACITY AVAILABLE AT LOW HEAT LEAK STEADY STATE CONDITIONS.

$$6000\,\ell \times \frac{hr}{230\,\ell} = 26\ hr$$

534393

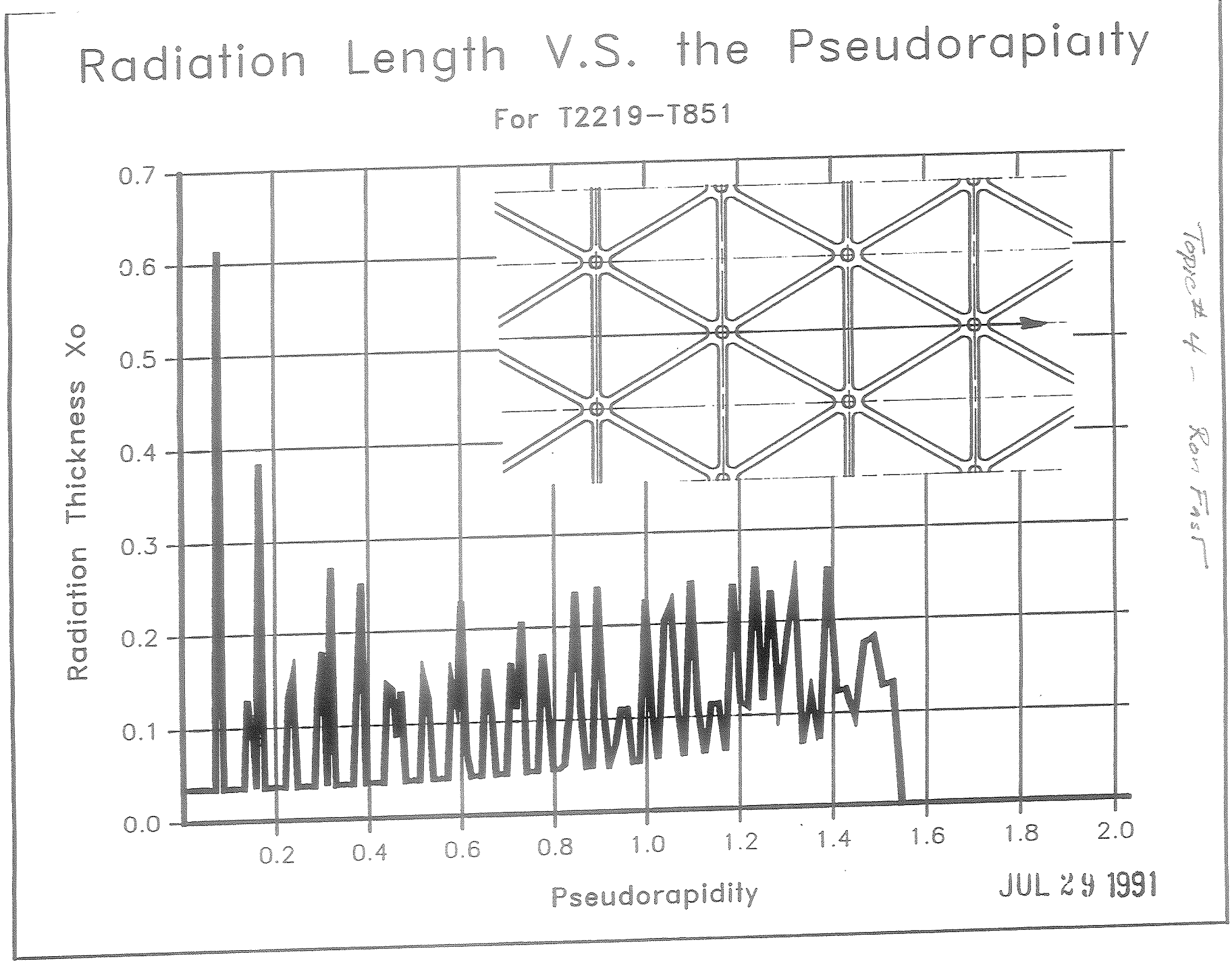

Fig. 4(a). Thickness in radiation lengths for isogrid vacuum shell as a function of pseudorapidity for new 2219 isogrid (Fig. 3).

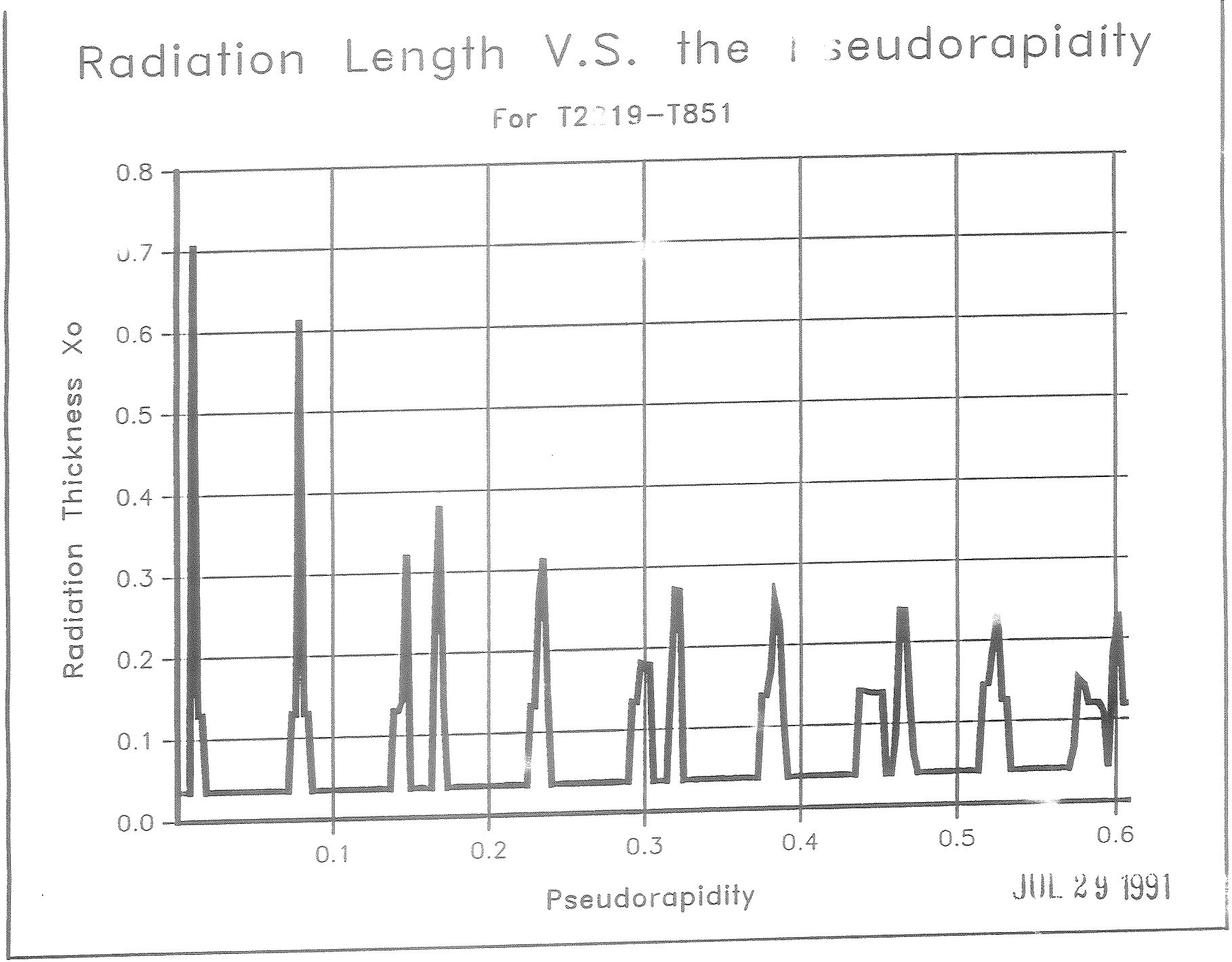

Fig. 4(b). Thickness vs pseudorapidity, at high resolution for vacuum shell only, new 2219 isogrid.

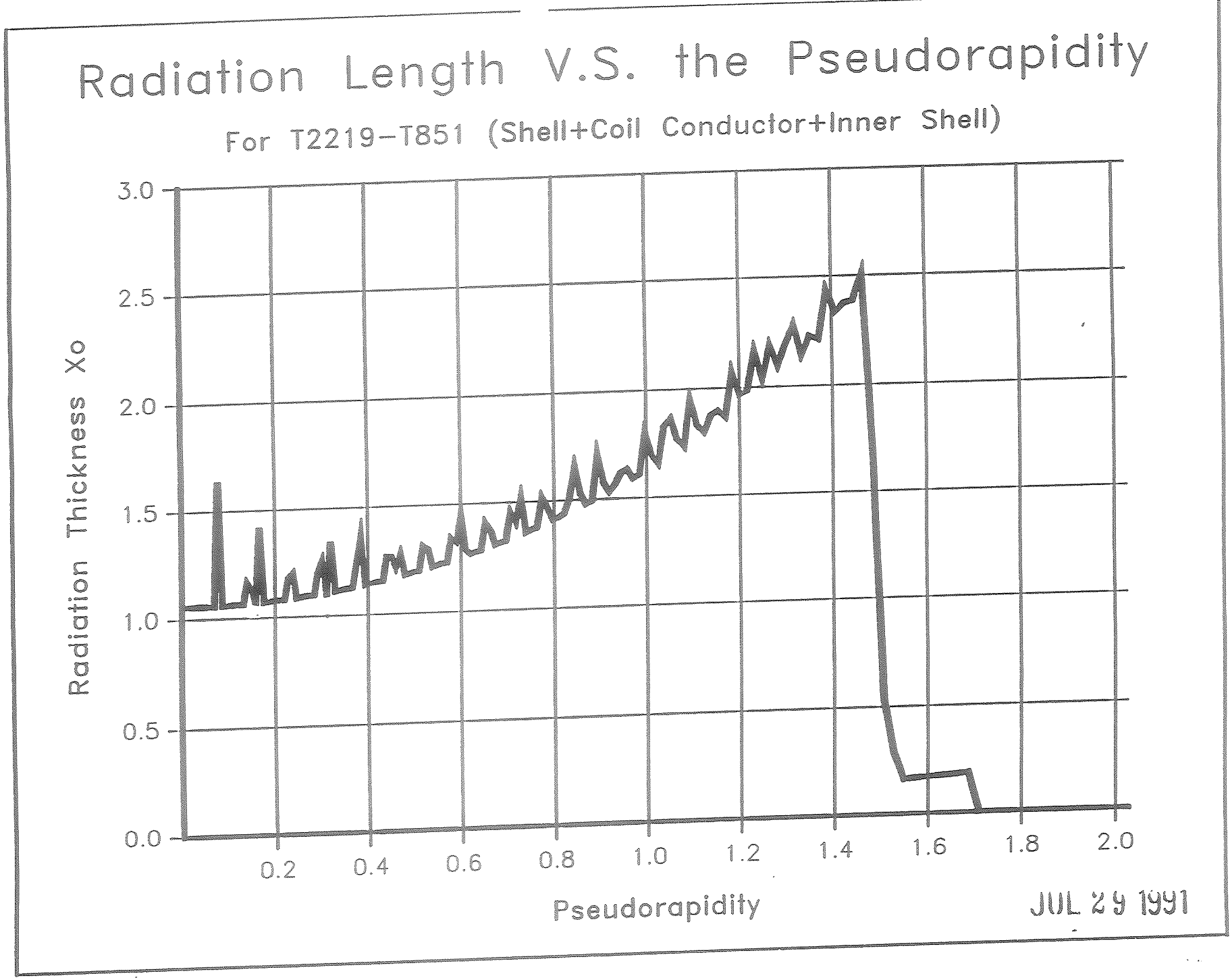

Fig. 4(c). Thickness vs pseudorapidity, cold mass, inner and outer vacuum shells, new 2219 isogrid.

Radiation Length V.S. Pseudorapidity

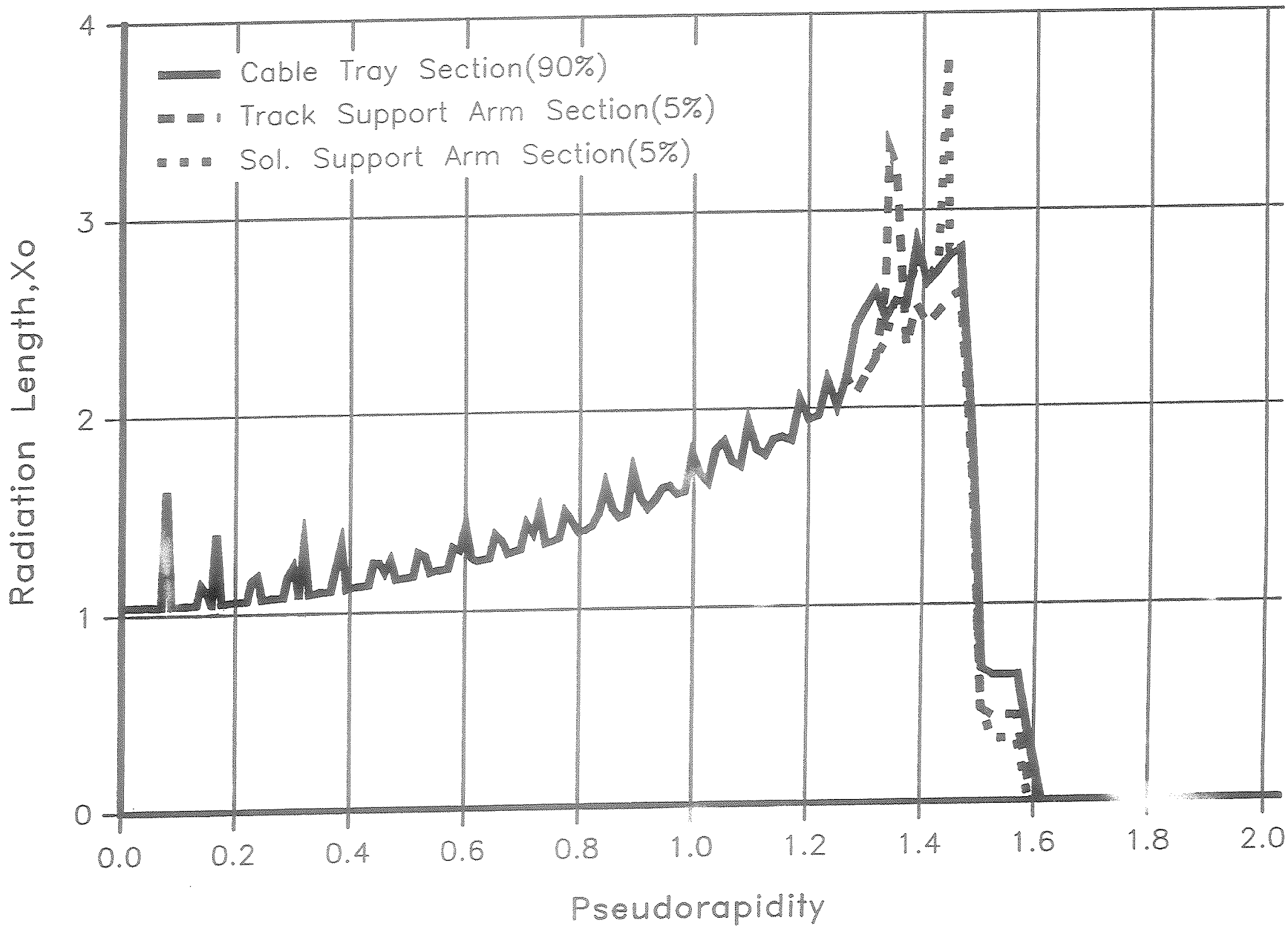

Topic #5

Jim Krebs

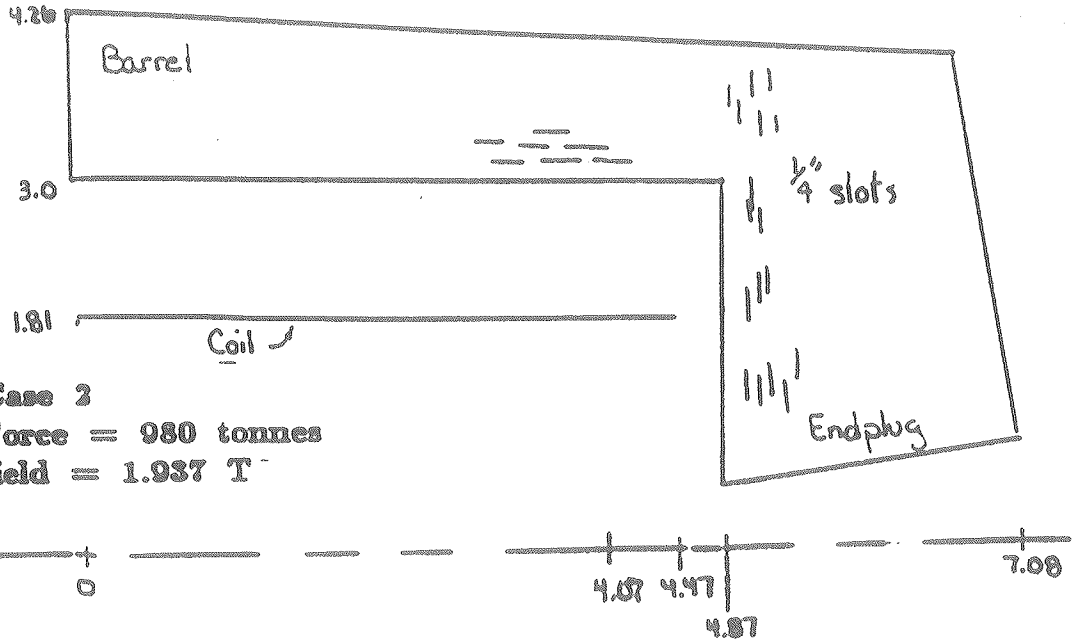

Case 2
Compressive Force = 980 tonnes
Central Field = 1.937 T

Axial Decentering Force = 43 Tonnes/In.
Radial " " = .69 Tonnes/In.

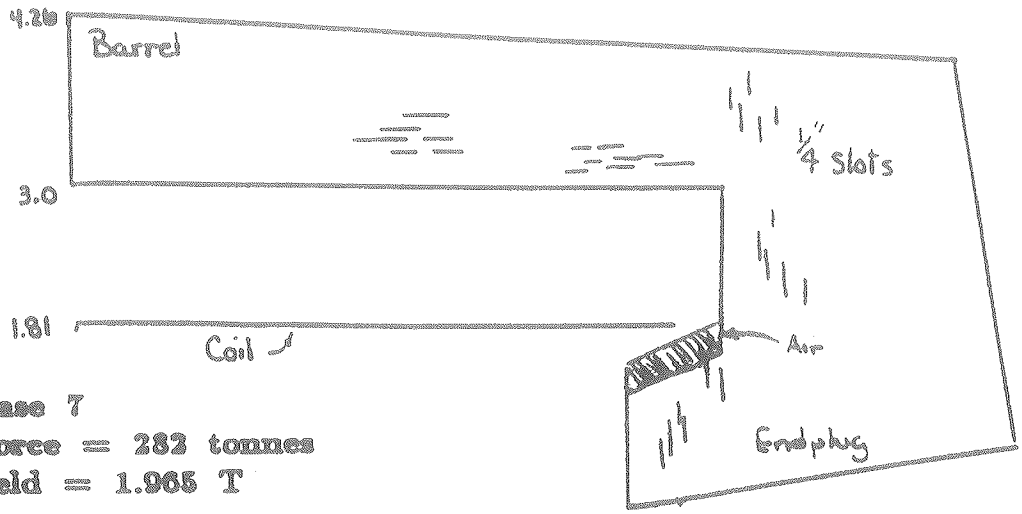

Case 7
Compressive Force = 282 tonnes
Central Field = 1.965 T

Axial Decentering Force = 66 Tonnes/In.
Radial " " = 201 Tonnes/In.

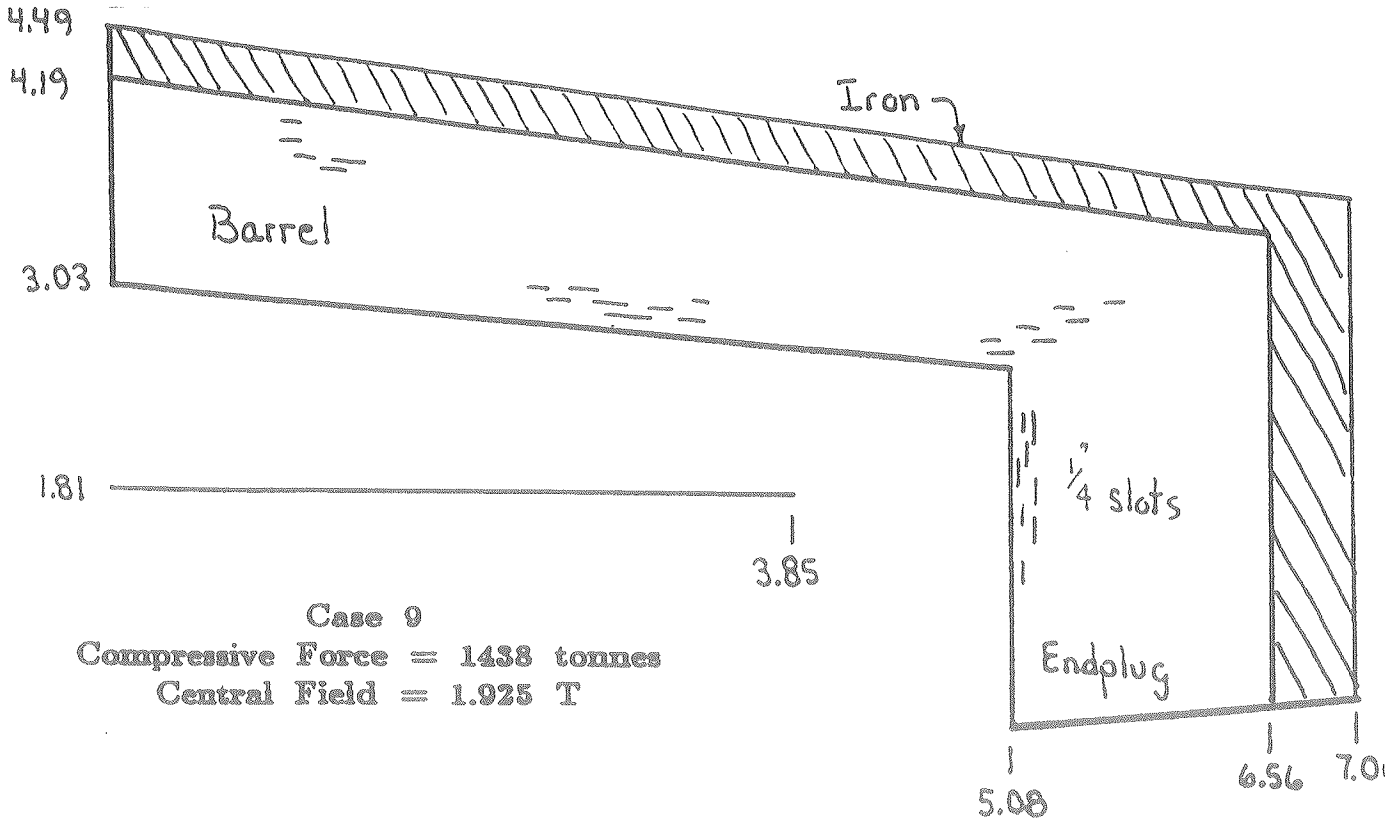

Case 9
Compressive Force = 1438 tonnes
Central Field = 1.925 T

Axial Decentering Force = 5 Tonnes /In.
Radial " " = 0

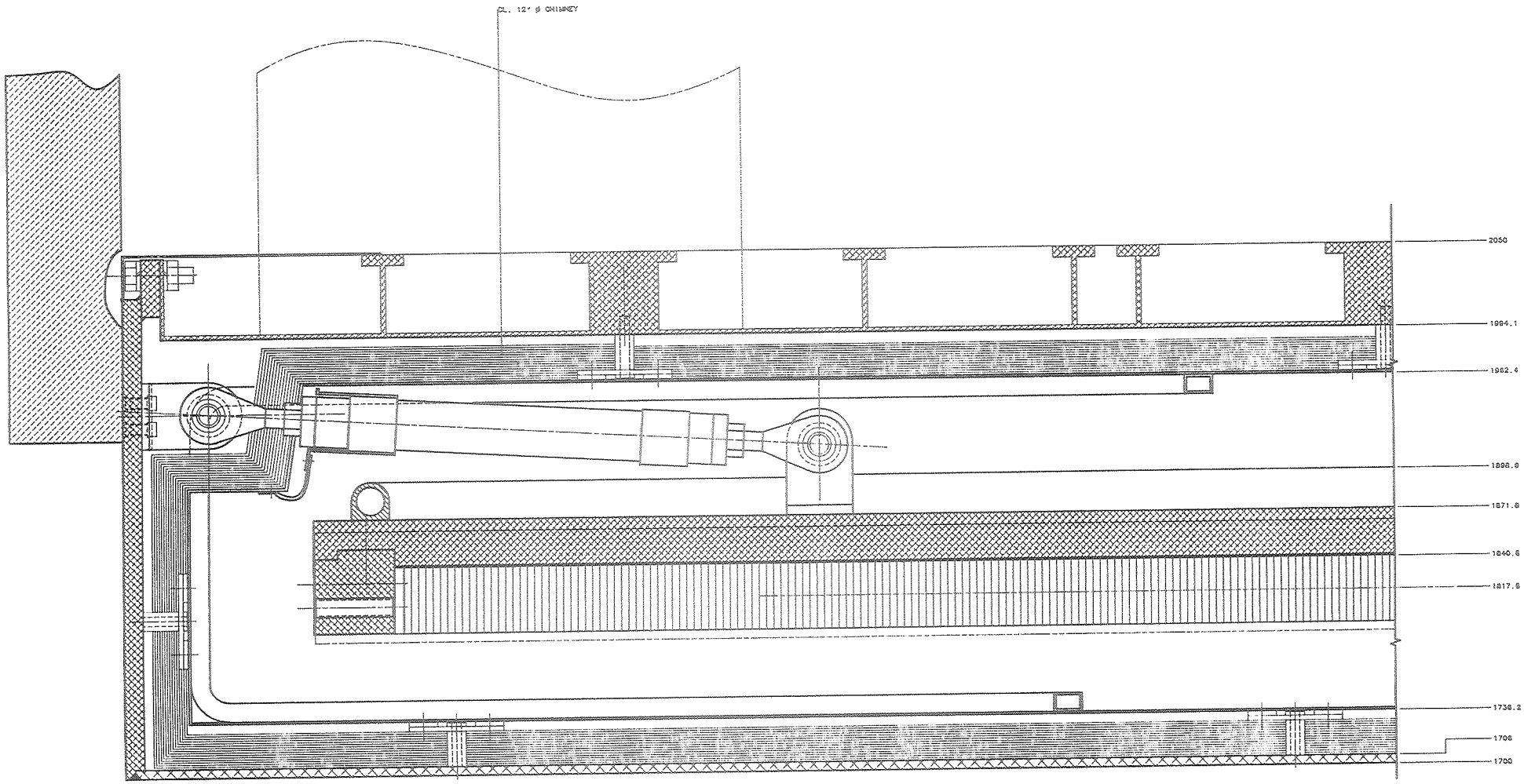

ITEM NO.	PART NO.	DESCRIPTION OR SIZE	QTY REQ.

PARTS LIST

UNLESS OTHERWISE SPECIFIED			ORIGINATOR	J. KREBS	6/01
FRACTIONS	DECIMALS	ANGLES	DRAWN	D. FRIEDO	6/5/01
±	±	±	CHECKED		
			APPROVED		
			USED ON		
			MATERIAL		E

1. BREAK ALL SHARP EDGES 1/64 MAX.
2. DO NOT SCALE DWG.
3. DIMENSIONING IN INCHES WITH MOD. 714.8 STD'S.

√ SEE ALL MACHINED SURFACES

FERMI NATIONAL ACCELERATOR LABORATORY
UNITED STATES DEPARTMENT OF ENERGY

SOLENOIDAL DETECTOR COLLABORATION
SUPERCONDUCTING SOLENOID
CROSS SECTION (ISOGRID SHELL MODIFIED #3)

SCALE	DRAWING NUMBER	SHEET NO.	REV.
FULL		1	

1

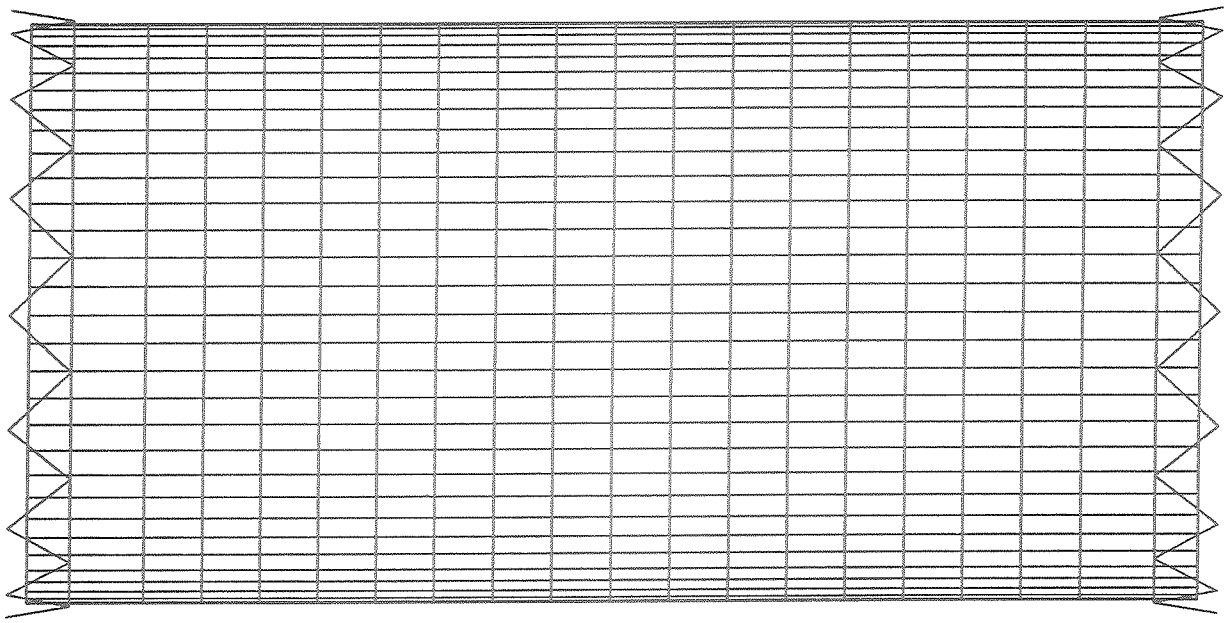

Axial load analysis of trussed coil support

ANSYS 4.4A
JUL 23 1991
8:31:13
PLOT NO. 1
POST1 ELEMENTS
TYPE NUM

XV =1
DIST=170.753
XF =38.25
PRECISE HIDDEN

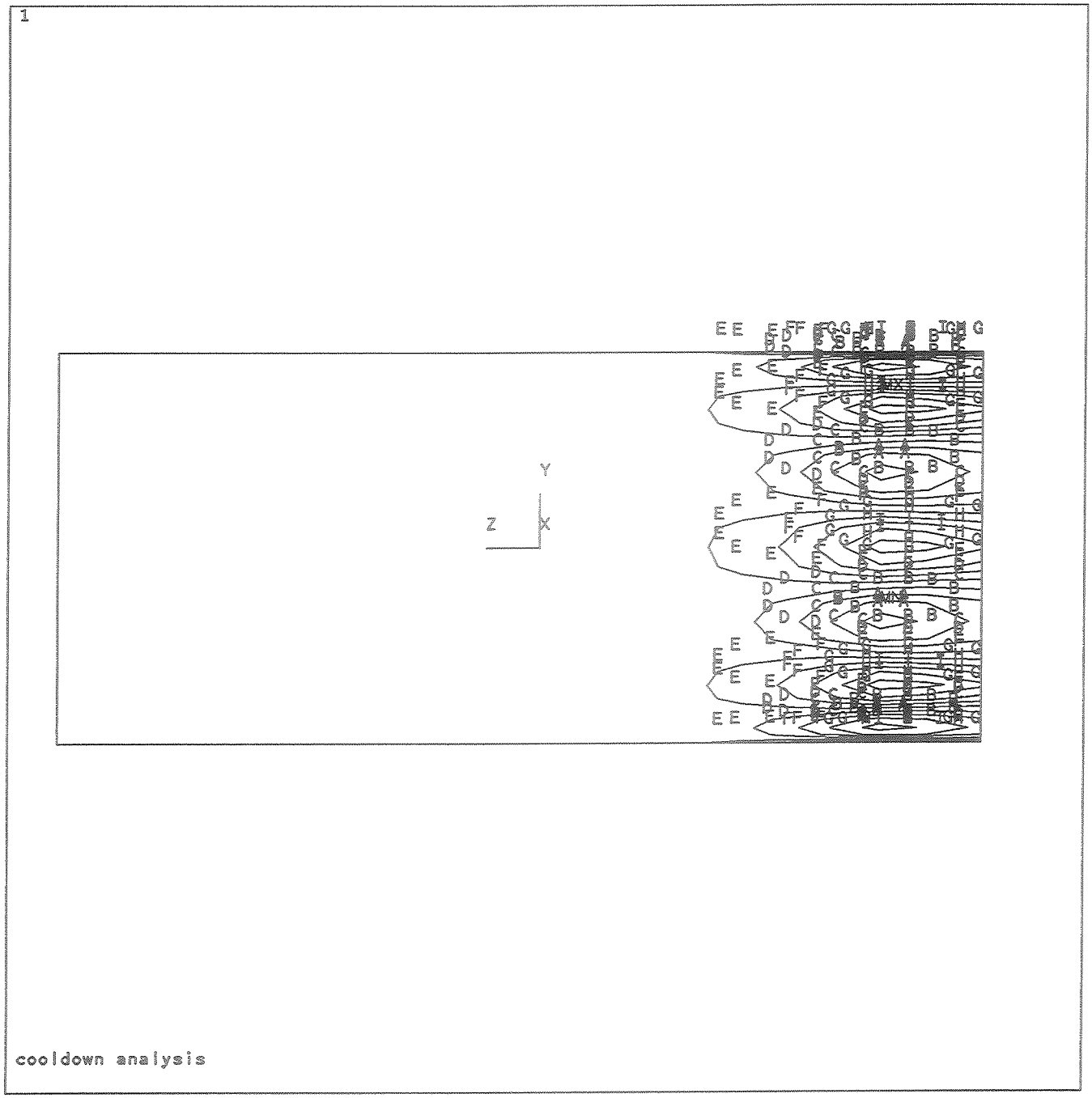

ANSYS 4.4A
APR 17 1991
15:39:31
PLOT NO. 1
POST1 STRESS
STEP=1
ITER=1
SZ (AVG)
MIDDLE
S GLOBAL
DMX =1.468
SMN =-0.056495
SMX =0.062387

XV =1
DIST=190.933
XF =36.329
ZF =-1.925
EDGE
A =-0.04989
B =-0.036681
C =-0.023472
D =-0.010263
E =0.002946
F =0.016155
G =0.029364
H =0.042573
I =0.055782

SDRC I-DEA : Solid_Modeling

17-MAY-91 09:54:37

Database: A Truss Support System for the SDC Supe. ducting Solenoid
View : No stored View
Task: ASSEMBLY
System: No stored SYSTEM

Units : IN
Display : No stored Option
Bin: 1-MAIN
Update Level: Full

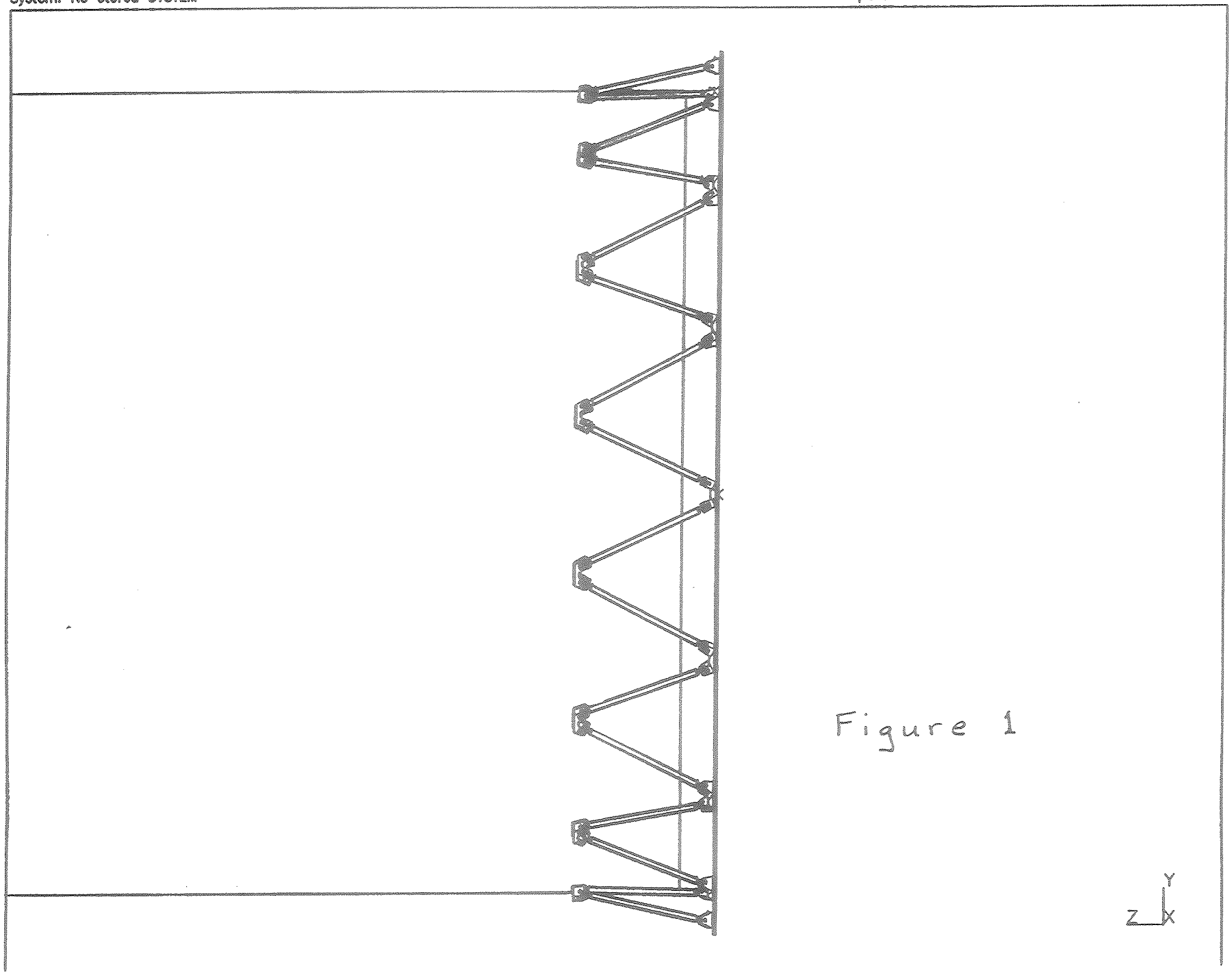

Figure 1

SDRC I-DEAS V: Solid_Modeling

17-MAY-91 09:47:14

Database: A Truss Support System for the SDC Superconducting Solenoid
View : No stored View
Task: ASSEMBLY
System: No stored SYSTEM

Units : IN
Display : No stored Option
Bin: 1-MAIN
Update Level: Full

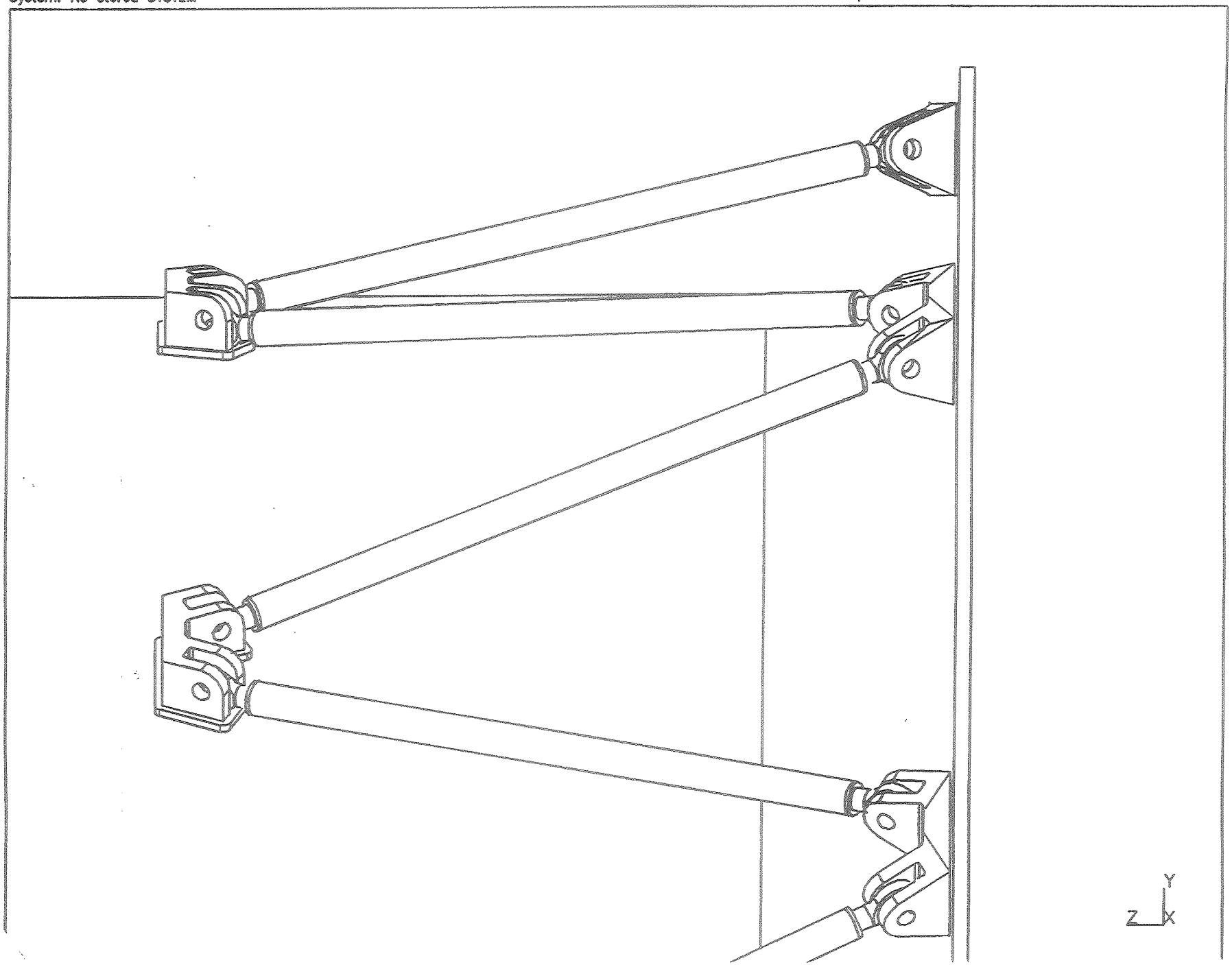

SDRC I-DEAS V: Solid_Modeling 17-MAY-91 10:13:19

Database: A Truss Support System for the SDC Superconducting Solenoid
View : No stored View
Task: OBJECT
Object: 16-WORK16, {COLD KNUCKLE, Bin1} (Mod)

Units : IN
Display : No stored Option
Bin: 1-MAIN
Update Level: Full

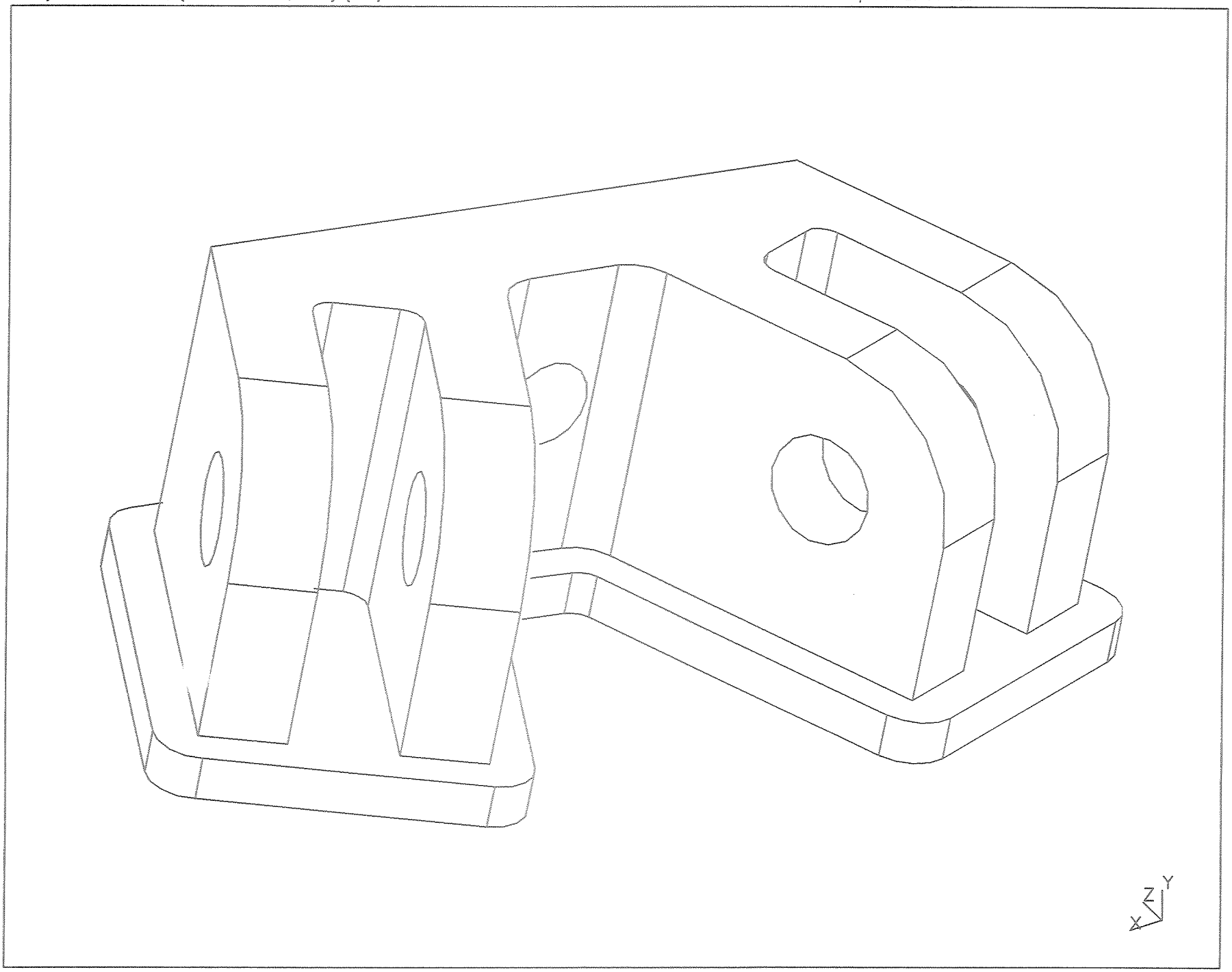

SDRC I-DEAS V: Solid_Modeling 17-MAY-91 10:06:30

Database: A Truss Support System for the SDC Superconducting Solenoid
View : No stored View
Task: OBJECT
Object: 15-WORK15, {WARM KNUCKLE W/HOLE, Bin1} (

Units : IN
Display : No stored Option
Bin: 1-MAIN
Update Level: Full

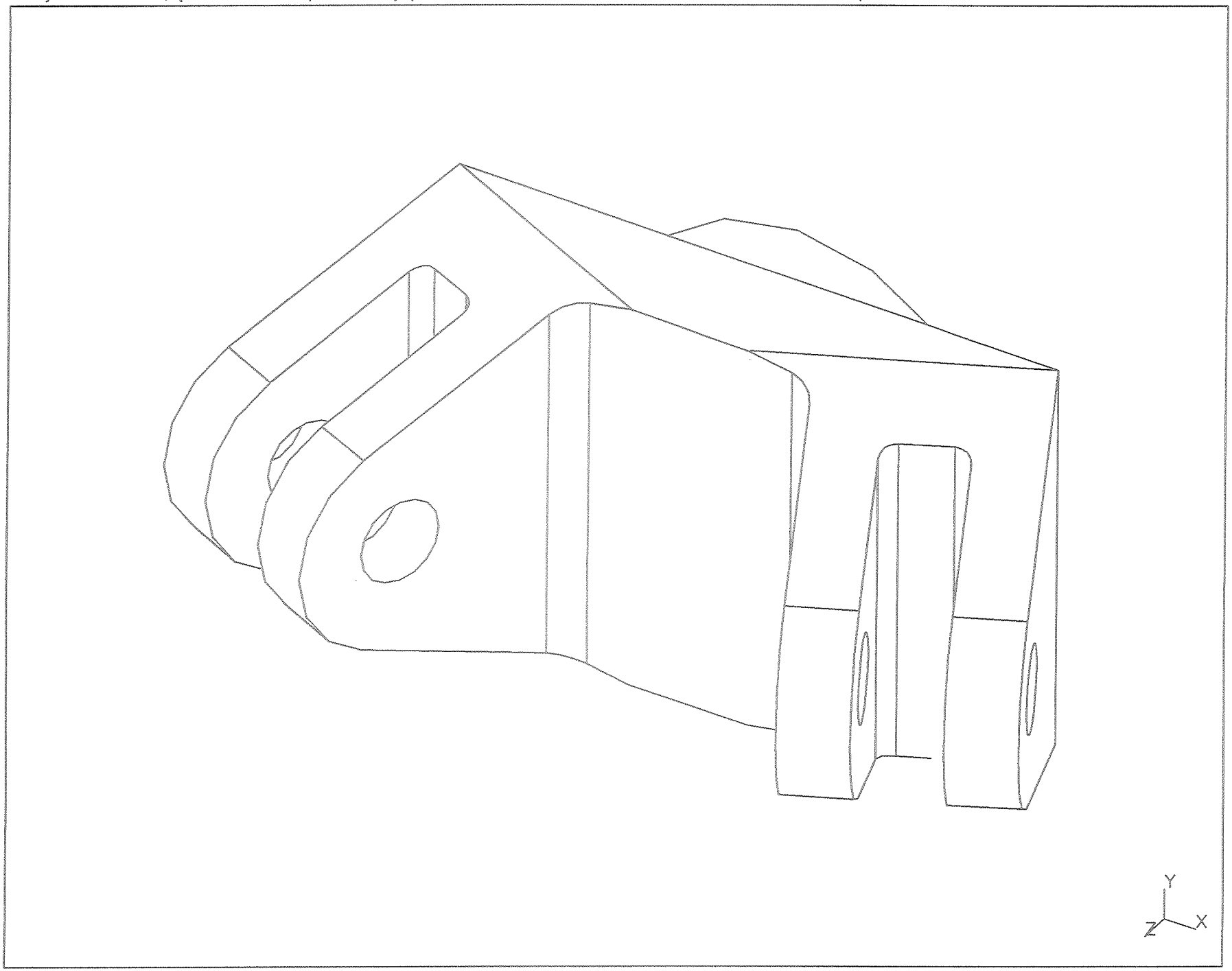

SDRC I-DEAS V: Solid_Modeling 17-MAY-91 10:09:25

Database: A Truss Support System for the SDC Superconducting Solenoid
View : No stored View
Task: OBJECT
Object: 16-WORK16, {COLD KNUCKLE, Bin1} (Mod)

Units : IN
Display : No stored Option
Bin: 1-MAIN
Update Level: Full

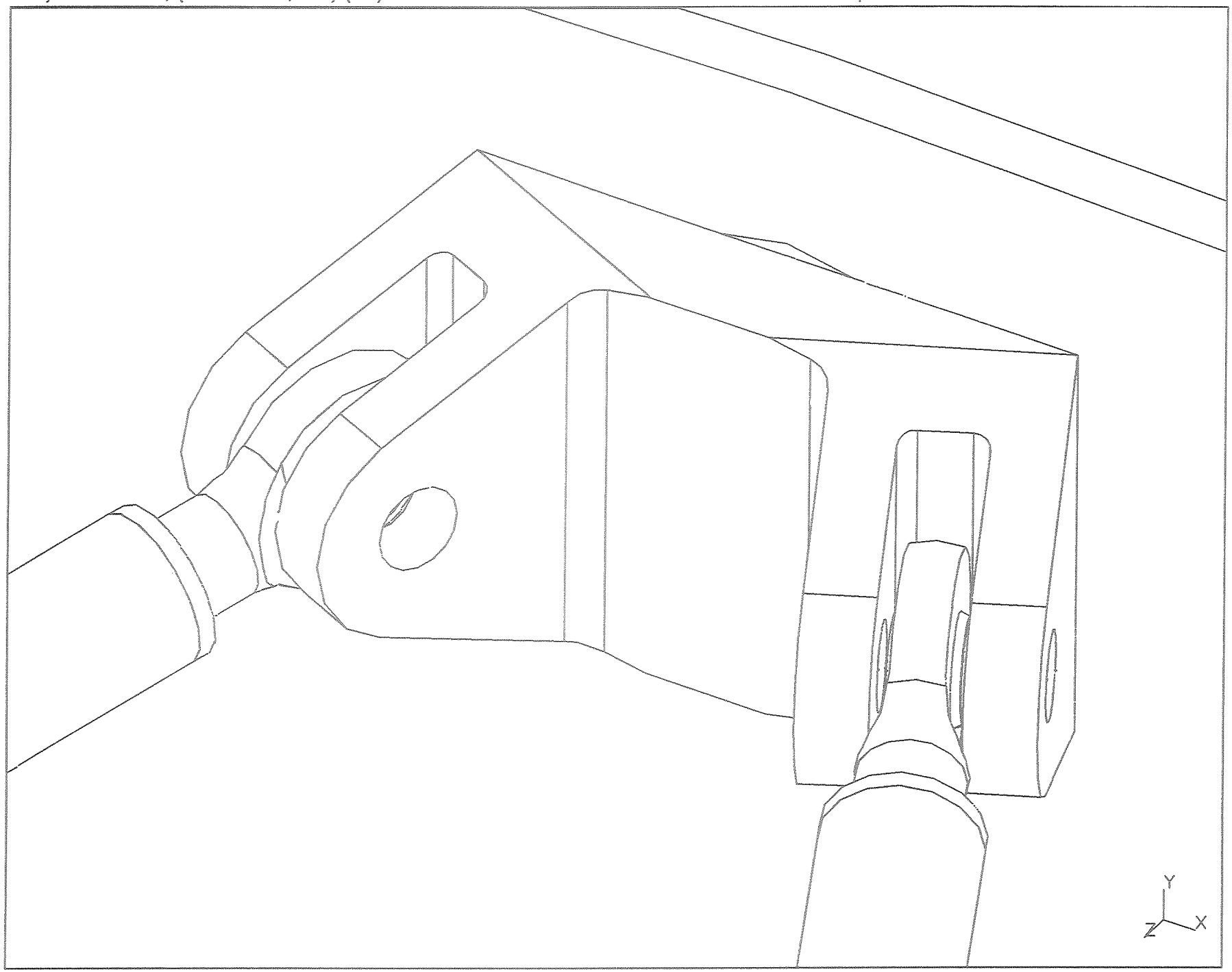

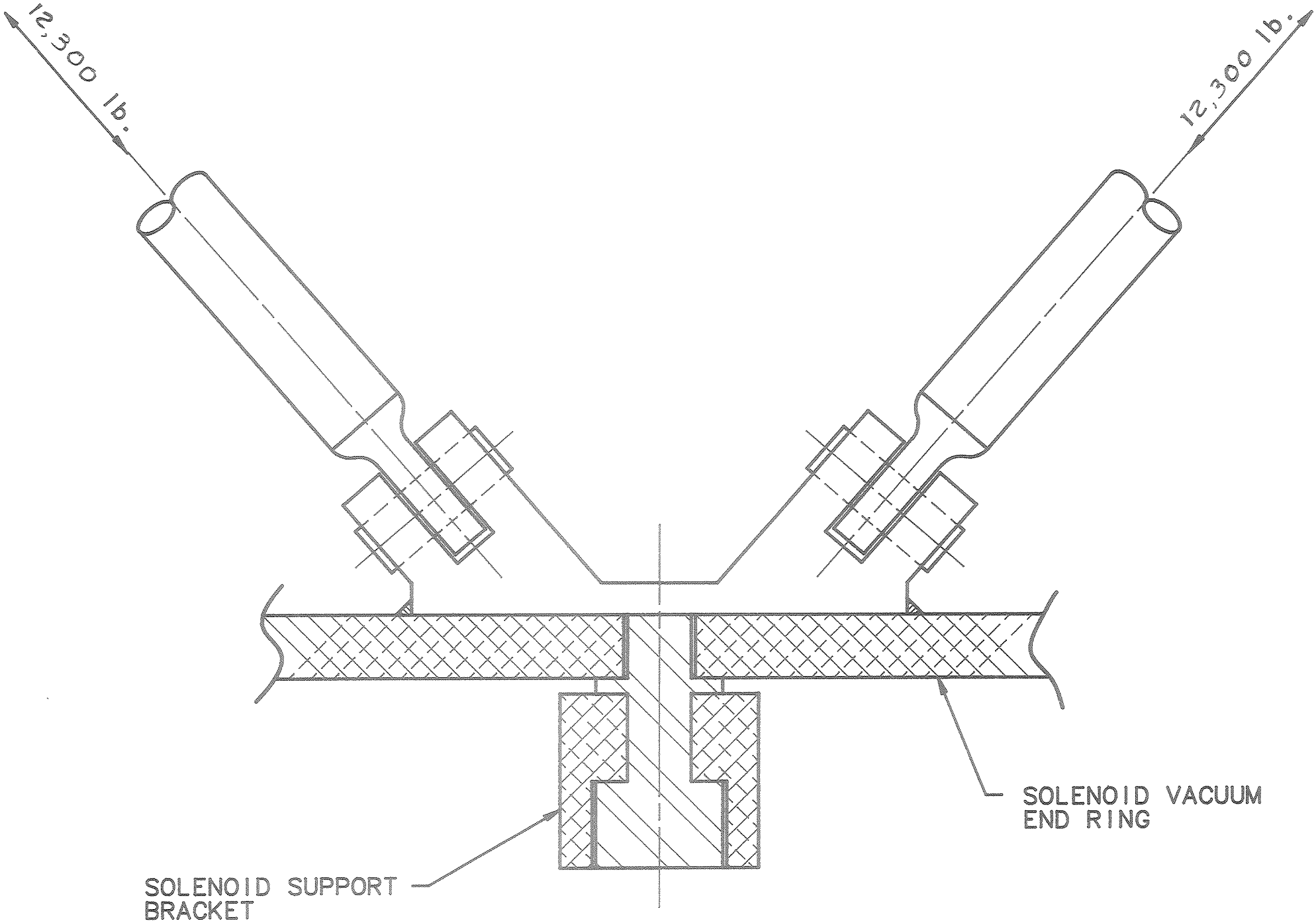
12,300 lb.
12,300 lb.
SOLENOID VACUUM
END RING
SOLENOID SUPPORT
BRACKET

Topic # 6 - Jim Krebs

DRAFT

SUPERCONDUCTING SUPER COLLIDER (SSC)
SOLENOIDAL DETECTOR COLLABORATION (SDC)

MAGNET & CENTRAL TRACKER
RRR & INTERFACE CONTROL DOCUMENT

Oak Ridge National Laboratory
Oak Ridge, TN

T. L. Ryan
W. O. Miller
C. Grozis

DATE: 4/24/91 REVISED: 6/7/91

SDC Tech. Note No. SDC-91-00026

DRAFT

1.0 PURPOSE

This report describes the physical requirements and resources for the Magnet and Central Detector of SDC. This includes the Magnet, Outer Tracker, Intrmediate Tracker and Silicon Tracker. The purpose of this document is to define the envelopes, interfaces and facility requirements for these components of the SDC.

2.0 INTRODUCTION

The design of the central tracking chamber in the SDC experiment for the Superconducting Super Collider calls for a cylindrical tracking chamber.

The Central Tracking Chamber (CTC) is conceptually simple. The detection elements, straw tubes or scintillating fiber, are laid in superlayers on the outer surfaces of carbon composite concentric support cylinders whose central axes coincide with that of the colliding beam (z axis). Each straw superlayer is composed of four millimeter diameter straws, and each scintillating fiber superlayer is composed of one millimeter diameter fibers.

In this design, all straw tubes are parallel to the z axis and therefore a superlayer is simply supported on the surface of the cylinder. The straw tube drift cell measure points in r and phi (using the standard cylindrical coordinates).

The scintillating fibers are also placed on the outer surface of the support cylinder. Since the fibers are flexible, they can be laid either along the z axis or wound on the cylinders at small angles with respect to z axis. The design uses these stereo layered scintillating fibers to measure the z coordinates of the tracks.

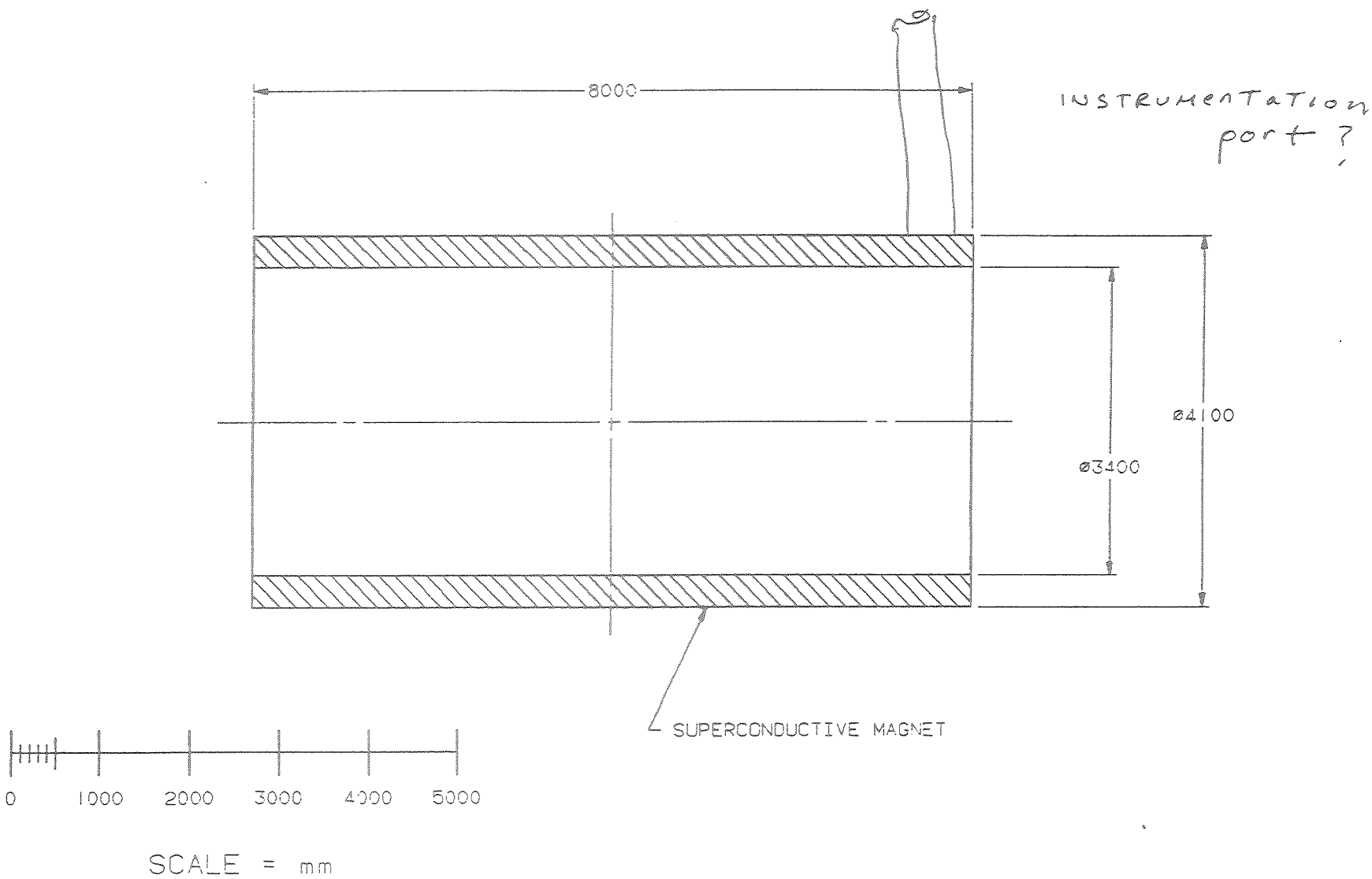

FIG 4.2.1 SUPERCONDUCTIVE MAGNET ENVELOPE

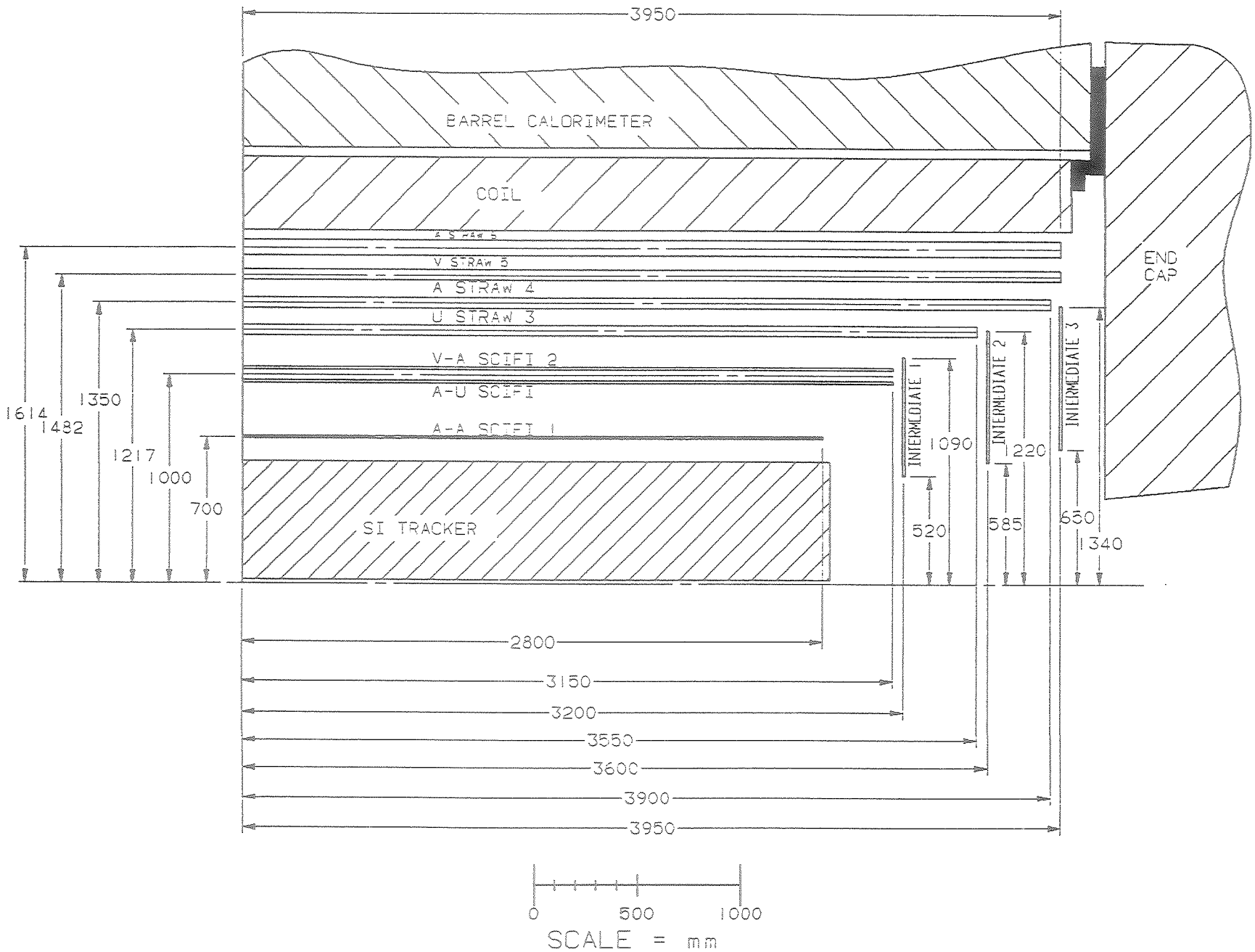

FIG 4.1.1 BASELINE CENTRAL TRACKER CONCEPT

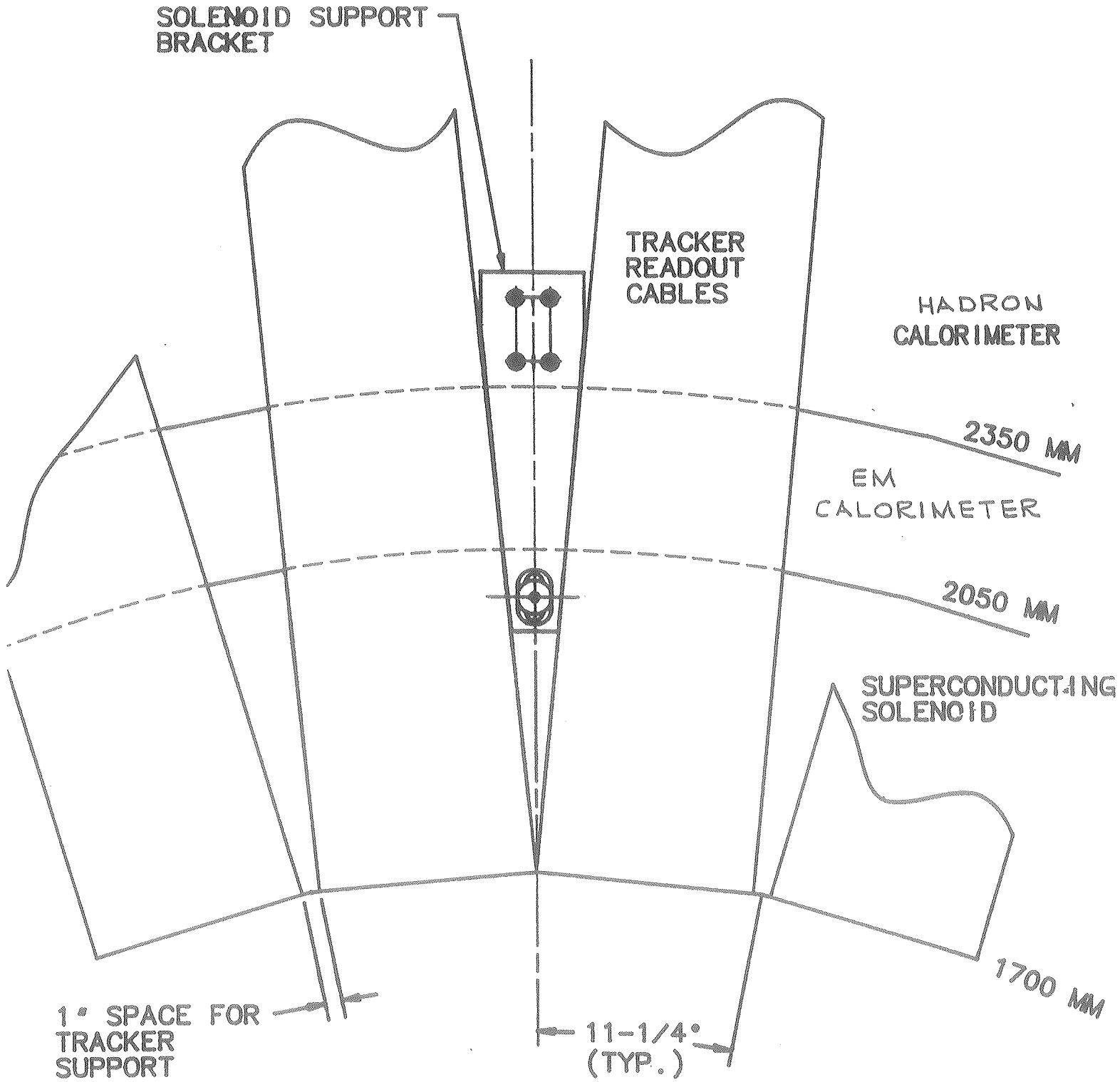

TRACKER VOLUME

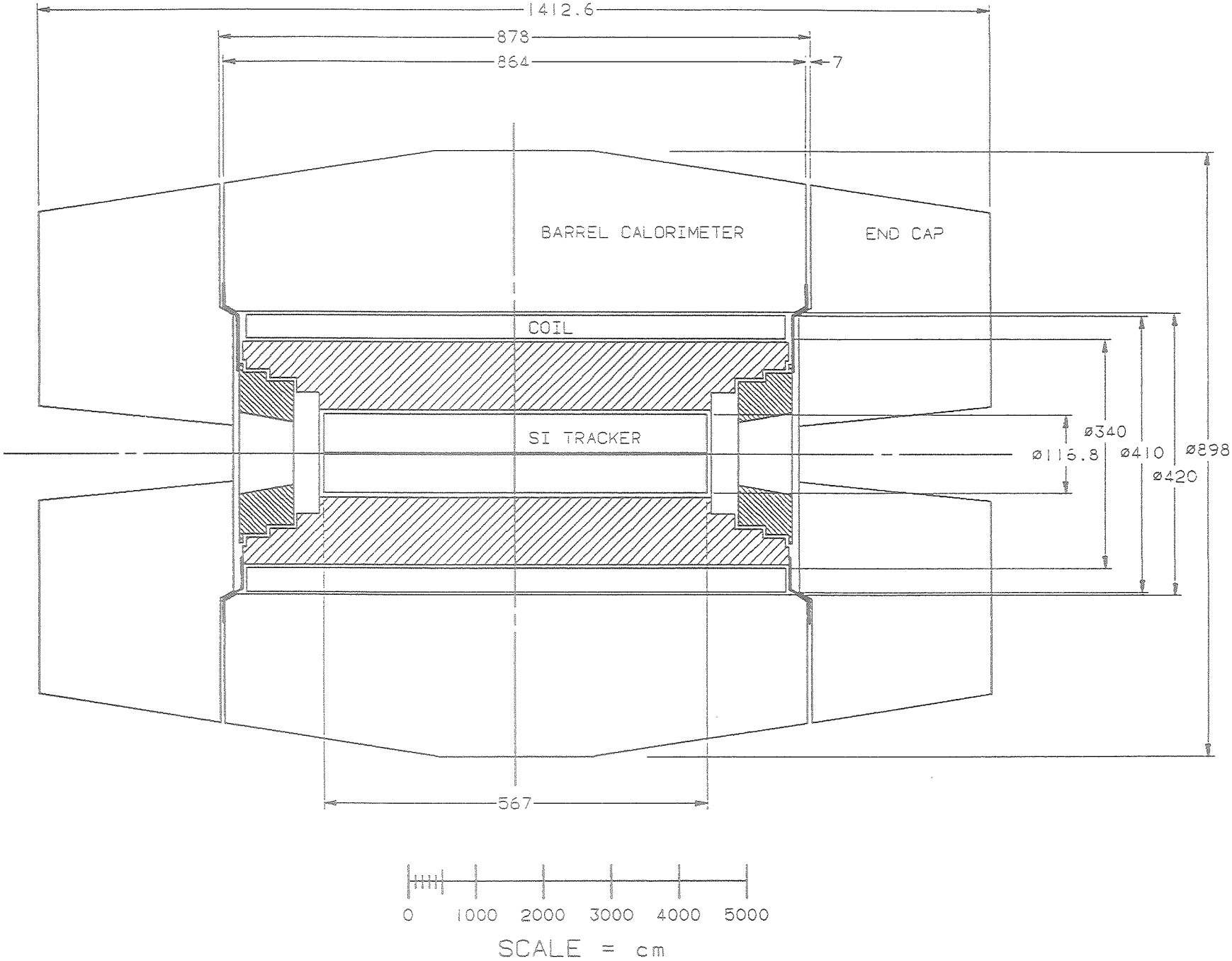

FIG 4.1.2 CENTRAL TRACKER LOCATION

Topic # 8 - Bob Wands

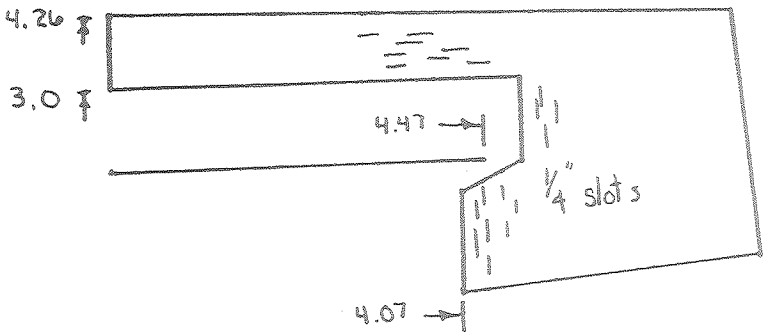

Case 0

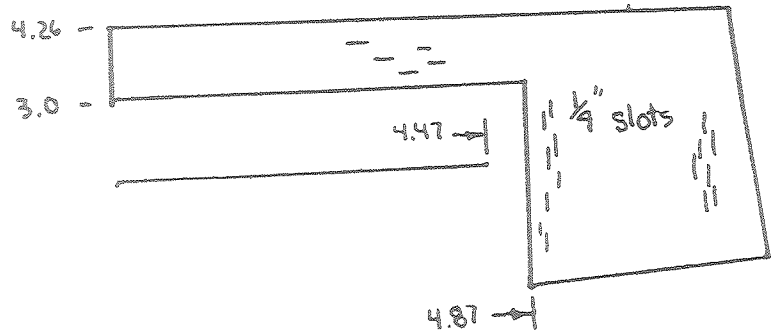

Case 2

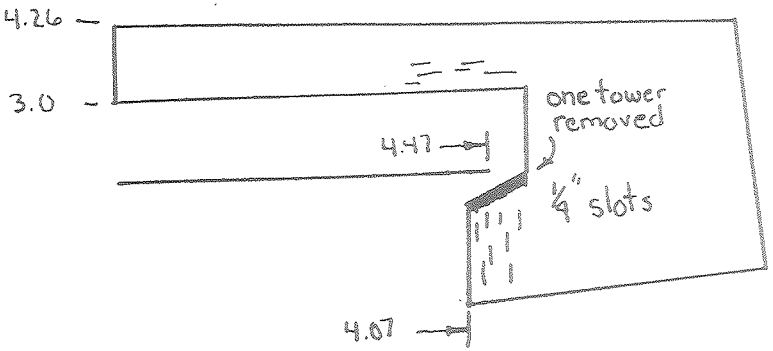

Case 7

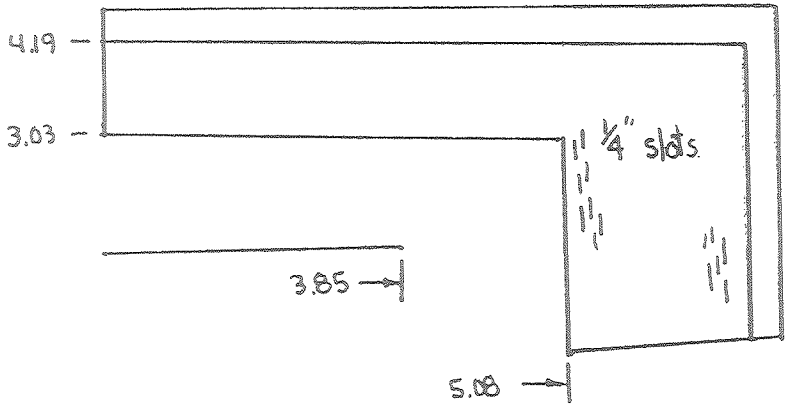

Case 9

Fig. 1. Coil/Calorimeter Geometries

Table I.
Radial Force Comparison

Model	Radial Force (tonnes/2 cm)
DSP - 3d (coarse)	3.3
V - 3d (coarse)	11.0
DSP - 3d (refined)	12.1
V - 3d (refined)	11.1
DSP - 3d (total energy)	5.4
V - 3d (total energy)	20.1
V_2d approximate	11.1

Table II
Axial and Radial Decentering Forces for Four Generic Cases

Case	Axial Decentering Force (tonnes/in)	Radial Decentering Force (tonnes/in)
0	-	206
2	43	<1
7	66	200
9	5	<1

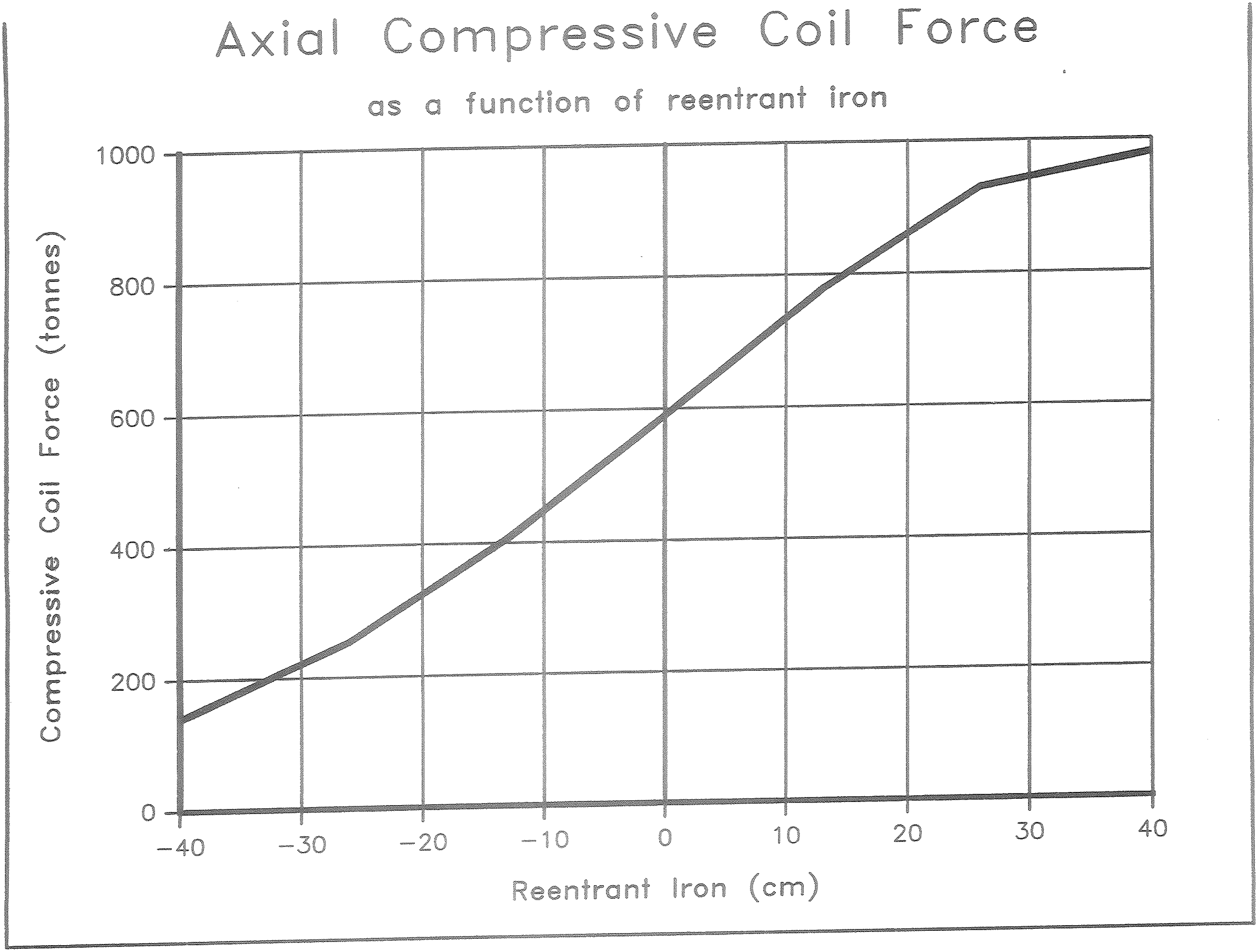
Axial Compressive Coil Force
as a function of reentrant iron
Compressive Coil Force (tonnes)
1000
800
600
400
200
0
−40
−30
−20
−10
0
10
20
30
40
Reentrant Iron (cm)

Investingation of Coil and Support Cylinder Interaction

OBJECTIVE: To limit the relative motion between coil and support cylinder

by

(1) Preloading both the coil and support cylinder

(2) Using epoxy bond between the coil and support cylinder

(3) Frictional joint between the coil and support cylinder

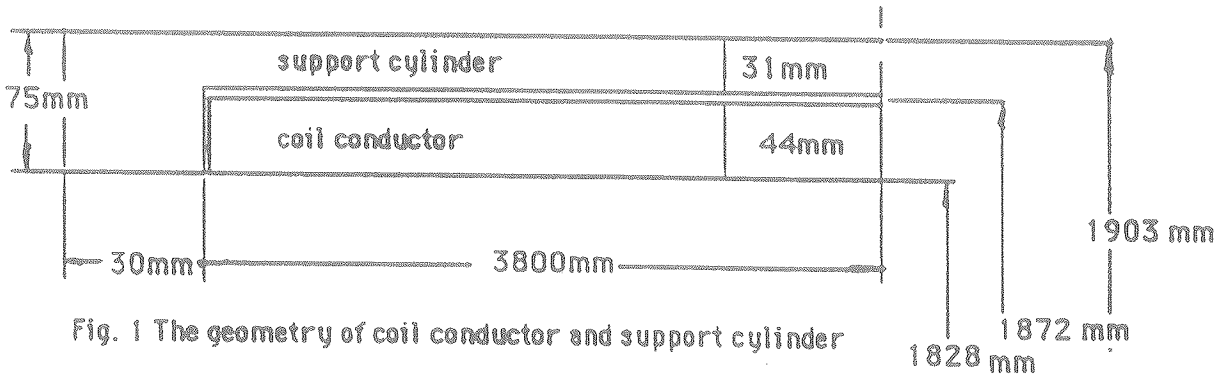

Fig. 1 The geometry of coil conductor and support cylinder

Therefore, the relative motion will vanish, and the two curves will collapse on each other as expected. The model will become two springs with different stiffnesses connected in parallel. However, the real axial force will be a distributed force, and its strain will be a function of x. The strain of support cylinder will, however, be a constant in the x direction because all action takes place in its end. Hence, these two displacement curves never be able to match each other. We conclude that the relative motion can not be prevented by "preload".

Case 2 ___Glue Joint Between Coil Conductor and Support Cylinder

A 2-D axisymmetric finite element model is constructed to calculate the shear stress in an epoxy bond between the coil and support cylinder. The distribution of the magnetic force on the coil is obtained directly from a finite element model magnetostatic calculation. The stress-stain curve for coil conductor is assumed to be that of the CDF coil with a strain limit 0.1% [2]. The shear strength of epoxy is assumed to be 2800 psi [3]. Five different geometries [4] of the coil have been investigated. The result are shown in Table 1. It shows that for the air _core case with an axial force 1530 (tonnes), the safety factor can be as high as 28. If the case_0 is prefered, the SF value can go up to 140.

Table 1 Calculation Result for Five Different Geometries

Case	F(axial) (tonnes)	Max. shear stress (psi)	Safety Factor ($2800/\tau_{max}$)	Max. Strain %
Air_core	1530	98	28	0.1000
Case_2	1064	87	32	0.0500
Case_3	583	75	37	0.0350
Case_7	272	36	77	0.0025
Case_0	140	20	140	0.0020

The possible max. friction for a given frictional coeffcient u

For air_core case, u=0.2, F(axial)=1530 (ton)

S_1 (max) = 40 mpa = 5848 psi ⇒ ε% ≈ 0.1%

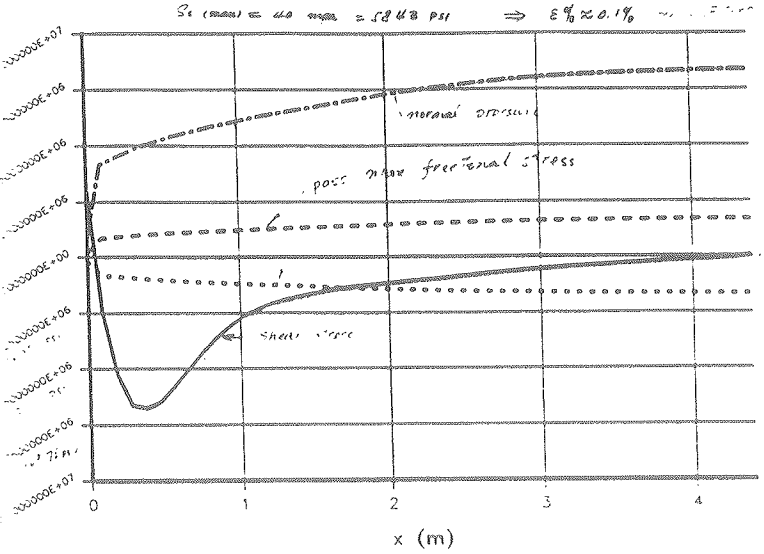

The possible max. friction for a given frictional coeffcient u

For case_2, u=0.2, F(axial)=1064 (ton)

S_1 (max) = 38.68 mpa = 5608 psi ⇒ ε% ≈ 0.05%

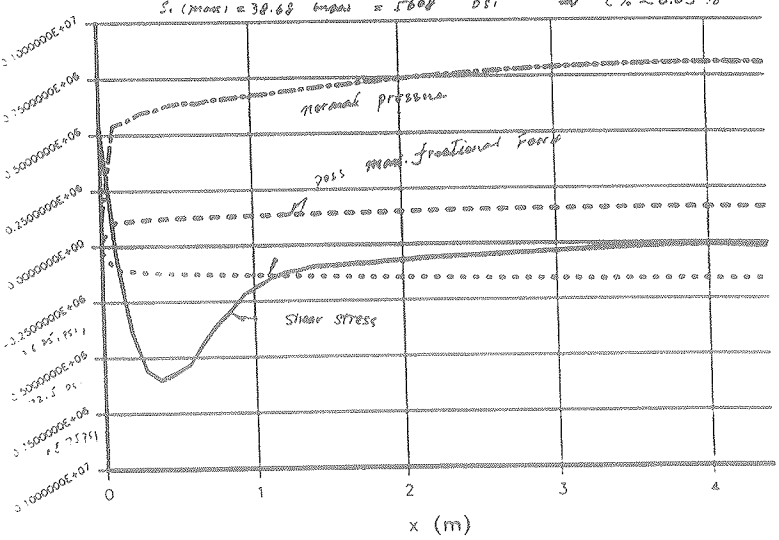

The possible max. friction for a given frictional coeffcient

For case_7, u=0.2, F(axial)=272(ton)

S_1(max) = 34.70 mpa = 5031.5 (psi) ⇒ ε% ≈ 0.0025%

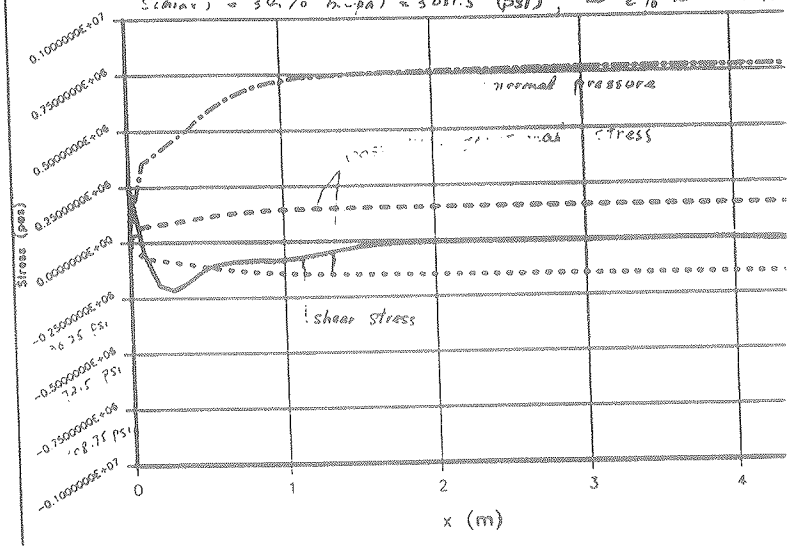

The possible max. friction for a given frictional coeffcient u

For case_3, u=0.2, F(axial)=583 (ton)

S_1 (max) = 36.81 (mpa) = 5337 (psi) ⇒ ε% ≈ 0.035%

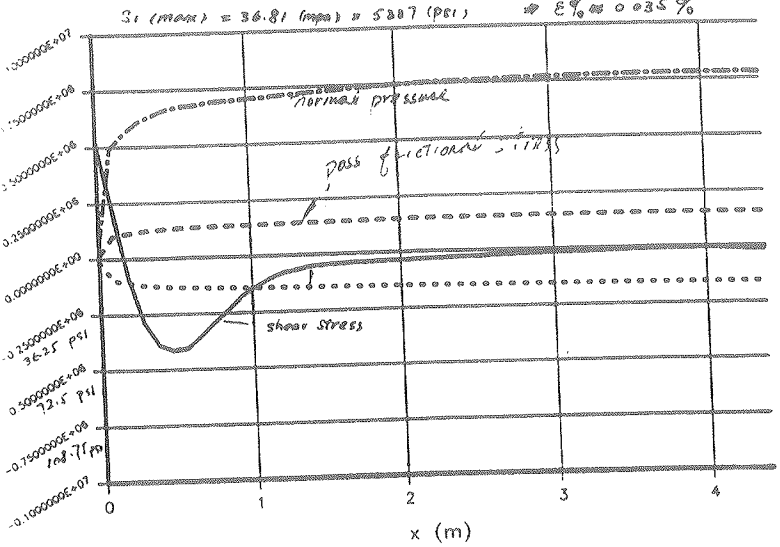

The possible max. friction for a given frictional coeffcient

For case_0, u=0.2, F(axial)=168 (ton)

S_1 (max) = 34 (mpa) = 4959 (psi) ⇒ ε% ≈ 0.002%

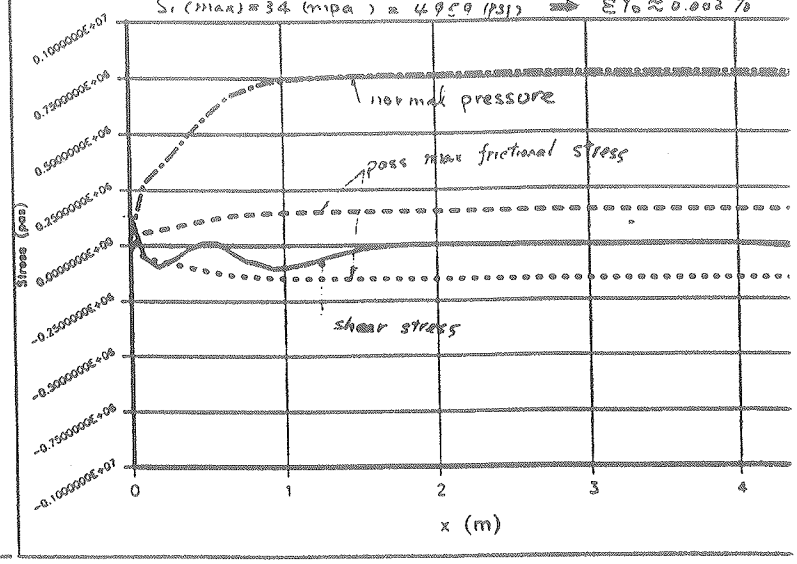

Topic 9 - Bob Wands

July 30, 1991

Solenoid Design Standards

The following list of components and standards was compiled by the SDC solenoid design group at Fermilab and tries to answer the question 'What standards would we use if we had to design the SDC solenoid for approval by a Fermilab safety committee?'

Pressure Vessels (control dewar, cryogen storage dewars)

Fermilab ES&H Chapter 5032, 'Cryogenic Pressure Vessels'. This chapter requires design according to ES&H Chapter 5031, 'Room Temperature Pressure Vessels', which in turn refers to the ASME Boiler Pressure Vessel Code, Section VIII, Div. 1.

Vacuum Vessels

Fermilab ES&H Chapter 5033, 'Vacuum Pressure Vessel Safety'. This standard refers to the the Compressed Gas Association Pamphlet CGA-341 and the ASME Pressure Vessel Code.

Support Cylinder

ASME Boiler and Pressure Vessel Code, Section VIII, Div. 1.

Conductor

Good engineering practice

Cold Mass Supports

Metallic - Ferrous:

AISC Specification for the Design, Fabrication and Erection of Structural Steel for Buildings

Metallic - Aluminum:

Aluminum Association Pub. # 1 'Aluminum Standards and Data'

Aluminum Association Pub. #30 'Specifications for Aluminum Structures.

Aluminum Association Pub. #33 'Engineering Data for Aluminum Structures

Metallic - other

Div 2, Appendix 4

Good engineering practice.

Composite:

Good engineering practice.

Piping System

ANSI/ASME Code for Pressure Piping, B31.3, 'Chemical Plant and Petroleum Refinery Piping'

CGA Pamphlet V-6, 'Standard Cryogenic Liquid Transfer Connections'

Pressure Relief Devices

ASME Boiler and Pressure Vessel Code, Section VIII, Div. 1

CGA S-1.3 'Pressure Relief Device Standards', Part 3 - Compressed Gas Storage Containers

API RP 521, 'Guide for Pressure-Relieving and Depressurizing Systems (Sizing Pressure Relief Valves for Liquid-Vapor Mixtures)

Bellows

On pressure vessels:

ASME Boiler and Pressure Vessel Code, Section VIII, Div. 1

On piping:

ASME Code for Pressure Piping, B31.3, 'Chemical Plant and Petroleum Refinery Piping', App XF

Heat Exchangers

Brazed Aluminum Plate Fin Heat Exchanger:

ASME Boiler and Pressure Vessel Code, Section VIII

Shell-and-Tube Heat Exchangers:

TEMA Standards, Class C

Welding

ASME Boiler and Pressure Vessel Code, Section IX

Electrical System

NFPA 70, National Electrical Code

NEMA Standards

IEEE

UL - Underwriter's Laboratories, Inc.

Control System and Instrumentation

ISA Standards and Recommended Practices

NFPA 70, National Electrical Code

Abbreviations:

AISC - American Institute of Steel Construction

ANSI - American National Standards Institute

API - American Petroleum Institute

ASME - American Society of Mechanical Engineers

CGA - Compressed Gas Association

IEEE - Institute of Electrical and Electronic Engineers

ISA - Instrument Society of America

NEMA - National Electrical Manufacturers Association

TEMA - Tubular Exchanger Manufacturers Association

TOPIC 10 - Rich Stanek

COST / SCHEDULE PRESENTATION.

OUTLINE

R. Stanek
8/2/91

1.0 INTRODUCTION TO C/S PROCESS

2.0 DESCRIPTION OF INFORMATION BEING SUPPLIED

- WBS
- COSTS
- CONTINGENCY
- SCHEDULES
- DICTIONARY
- DOCUMENTATION

3.0 QUESTIONS THAT NEED ANSWERS

AUG 1991
PRELIMINARY
Not Approved For
Publication
PUBLICATION

GENERAL COMMENTS

- A "WORKING" PRESENTATION
  * GOT IN "LATE IN THE GAME"
  * NEEDS MORE ATTENTION
  * HAVE ALL THREE GROUPS REPRESENTED
  * EVERY NUMBER COULD CHANGE

- HOWEVER, WE'RE BETTER THAN MOST

- COULD GET TO BE A "LONG" SESSION.

SDC MILESTONES FY91-92

FY91 MILESTONES

Revised "baseline" design	Mar. 15 April
Draft outline of Technical Proposal	Mar. 20 ✓
Tracking R&D directions	Mar. 23 ✓
Barrel toroid design direction	Mar. 23 April
Preferred configuration of int. muon system	Mar. 23 ✓
IR location/hall construction type	Apr. 15 May 15
Establish "baseline" for costing	May 15 ✓
Revised Technical Proposal outline	Jun. 20
Draft FY92 R&D plan	Jul. 1
Draft R&D Management Plan	Jul. 1
Revised cost estimate	Jul. 1
Draft construction schedule	Jul. 1
SSCL/PAC status review	Jul. 1? July 8
Task Force Report on uniform B	Aug. 5
Select central calorimetry type	Aug. 10?
Forward cal. R&D directions	Aug. 10
Scope decision	Aug. 10
Complete assignments for Tech. Proposal	Aug. 10
Establish tracking "baseline"	Sep. 28
Revised Resource Requirements Report	Sep. 30
Complete pre-Title I hall report	Sep. 30

FY92 MILESTONES

Final FY92 R&D plans	Oct. 1
First draft of responsiblity matrix	Oct. 1
Fix "baseline" for Tech. Proposal	Oct. 15
Begin Title I for underground hall	Nov. 1?
First draft of Tech. Proposal	Jan. 15
First draft of Cost&Schedule Book	Jan. 15
Second draft of responsibility matrix	Jan. 15
SSCL/PAC status review	Feb. 1?
Revised Management Plan	Mar. 15
Due date for Tech. Proposal	Apr. 1
Due date for Cost&Schedule book	Apr. 1
Final responsibility matrix	Apr. 1
SSCL/PAC review of Tech. Proposal	May 15?
Final construction Management Plan	Jun. 1
Begin Title II for underground hall	Jun. 1?
DOE review	Jul. 1?
Draft agreements	Aug. 15
Construction start	Oct. 1

SDC COST/SCHEDULE MEETING
JUNE 5 - 7, 1991

- For long range goals see milestone list
- Immediate goals in next ≈ two months
  - Establish structure and responsibilities for cost/schedule
  - Preliminary cost/schedule => decision about detector scope in early August(at Aug. 5-10 collaboration meeting)
- Goals for this meeting and meeting on June 17-19 at SSCL
  - Preliminary cost/schedule as input to scope decisions
  - Establish interfaces among subsystems
  - Provide cost "derivatives" to assist in scope evaluations
  - Preliminary contingency analysis
- In July - early August
  - Review and revise schedule
  - Improve cost estimates(individual meetings, not general)
  - Provide resource for scope decisions(what ifs)

COST OVERVIEW
(MILLION $)

		LOI	PRELIM. ESTIMATE	ALLOCATION (475M)	(600M)
4.1	S/C MAGNET	29.8	29.3		
4.2	CRYOGENIC SYSTEM	4.8	8.6		
	TOTALS	34.6	37.9	28*	38**

* BASED ON 3.0 m ϕ / 6.0 m

** BASED ON 3.5 m ϕ / 8.0 m

"My Understanding":

SSC DETECTOR BUDGET = $550M (SDC & GEM)
SDC LIMIT = $500M
US CONTRIBUTION = $225-325M

LOI	REV. PANEL	PRELIM. BASELINE	ALLOCATIONS	
$510M	$672M	$791M	$475M	$600M

LATEST "LBL" ROLL-UP: (K$)

	MATERIAL & MANUF. LABOR	EDIA	SUBTOTAL	CONTINGENCY	TOTAL
4.1	23,162	875 (3.6%)	24,036	5,100 (21.2%)	29,137
4.2	5730	631 (10%)	6,361	1,068 (16.7%)	7,429
TOTAL	28,892	1506 (4.9%)	30,397	6,169 (20.2%)	36,566

	A	B
1	WBS NUMBER	WBS OR ACTIVITY DESCRIPTION
3	4.1	*Superconducting Solenoid*
4	4.1.1	*Superconducting Coil*
5	4.1.1.1	Support Cylinder
6	4.1.1.2	Superconducting Wire
7	4.1.1.3	Coil Package Material and Winding
8	4.1.1.4	*Cryostat System*
9	4.1.1.4.1	Vacuum Vessel
10	4.1.1.4.1.1	Inner Shell
11	4.1.1.4.1.2	Outer Shell
12	4.1.1.4.1.3	End Plates
13	4.1.1.4.2	Nitrogen Vessel
14	4.1.1.4.2.1	Inner shell
15	4.1.1.4.2.2	Outer Shell
16	4.1.1.4.2.3	End Plates
17	4.1.1.4.3	Supports
18	4.1.1.4.3.1	Girder Structure
19	4.1.1.4.3.2	Radial Supports
20	4.1.1.4.4	Insulation
21	4.1.1.5	Instrumentation
22	4.1.1.6	Assembly & Test
23	4.1.1.6.1	Assembly
24	4.1.1.6.2	Fixtures and Equipment
25	4.1.1.6.3	Facility
26	4.1.1.6.4	Test Equipment
27	4.1.1.6.5	Test
28	4.1.2	*Power Supply System*
29	4.1.2.1	Prime Mover
30	4.1.2.2	Switches and SCRs
31	4.1.2.3	Dump Resistors
32	4.1.2.4	Quench Protection System
33	4.1.2.5	Current Transducers and Instrumentation
34	4.1.2.6	AC Cabling and Breakers
35	4.1.2.7	Assembly & Test
36	4.1.3	*Control Dewar and Chimney*
37	4.1.3.1	Valves and Piping
38	4.1.3.2	Cryostat
39	4.1.3.3	Chimney Transfer Line
40	4.1.3.4	Assembly & Test
41	4.1.3.4.1	Assembly
42	4.1.3.4.2	Test
43	4.1.4	*Controls and Instrumentation*
44	4.1.4.1	Uninteruptable Power Supply
45	4.1.4.2	Sensors
46	4.1.4.3	Cables and Connectors
47	4.1.4.4	Control System
48	4.1.4.4.1	I/O Hardware
49	4.1.4.4.2	Software
50	4.1.4.5	Assembly & Test
51	4.1.4.5.1	Assembly
52	4.1.4.5.2	Test
53	4.1.5	*Safety Report*
54	4.1.6	*Assembly & Test*
55	4.1.6.1	Assembly
56	4.1.6.2	Fixtures and Equipment
57	4.1.6.2.1	Magnet Support System
58	4.1.6.2.2	Tooling and Fixtures
59	4.1.6.3	Facility
60	4.1.6.4	Test Equipment
61	4.1.6.5	Test
62	4.1.7	*Magnetic Field Mapping Equipment*
63	4.1.7.1	Magnetic Field Monitors
64	4.1.7.2	Magnetic Field Mapping Apparatus
65	4.1.7.3	Assembly & Test
66	4.1.8	*Transportation to SSCL*
67	4.1.9	*Management & Integration*
68	4.1.9.1	Management
69	4.1.9.2	Integration

1	A WBS NUMBER	B WBS OR ACTIVITY DESCRIPTION
3	4.2	*Cryogenic Systems*
4	4.2.1	***Refrigeration Systems***
5	4.2.1.1	*Turn-key Helium Refrigerator*
6	4.2.1.2	*Liquid Nitrogen System*
7	4.2.1.2.1	Liquid Nitrogen Dewar
8	4.2.1.2.2	Valves, Pipes and Instrumentation
9	4.2.1.2.3	Pumps, Supcoolers and Other Equipment
10	4.2.1.2.4	Assembly & Test
11	4.2.1.2.4.1	Assembly
12	4.2.1.2.4.2	Test Equipment
13	4.2.1.2.4.3	Test
14	4.2.1.3	*Control System*
15	4.2.1.3.1	I/O Hardware
16	4.2.1.3.2	Software
17	4.2.1.4	*Assembly & Test*
18	4.2.1.4.1	Assembly
19	4.2.1.4.2	Facility
20	4.2.1.4.3	Test Equipment
21	4.2.1.4.4	Test
22	4.2.1.5	*Safety Report*
23	4.2.1.6	*Management and Integration*
24	4.2.1.6.1	Management
25	4.2.1.6.2	Integration
26	4.2.2	***Transfer Systems***
27	4.2.2.1	*Cryogenic Transfer Line System*
28	4.2.2.1.1	End Cans
29	4.2.2.1.1.1	Valves, Pipes and Instrumentation
30	4.2.2.1.1.2	Assembly & Test
31	4.2.2.1.2	*Expansion Boxes*
32	4.2.2.1.2.1	Valves, Pipes and Instrumentation
33	4.2.2.1.2.2	Assembly & Test
34	4.2.2.1.3	*Transfer Line Sections*
35	4.2.2.1.3.1	Pipe and Insulation
36	4.2.2.1.3.2	Assembly & Test
37	4.2.2.1.4	*Assembly & Test*
38	4.2.2.1.4.1	Assembly
39	4.2.2.1.4.2	Test
40	4.2.2.2	*Gas Piping System*
41	4.2.2.2.1	Valves and Pipe
42	4.2.2.2.2	Assembly & Test
43	4.2.2.2.2.1	Assembly
44	4.2.2.2.2.2	Test
45	4.2.2.3	*Electrical Buss System*
46	4.2.2.3.1	Copper Buss Material and Insulation
47	4.2.2.3.2	Assembly & Test
48	4.2.2.3.2.1	Assembly
49	4.2.2.3.2.2	Test
50	4.2.2.4	*Water Systems*
51	4.2.2.4.1	LCW Hook-up
52	4.2.2.4.1.1	Valves, Pipe and Instrumentation
53	4.2.2.4.1.2	Assembly & Test
54	4.2.2.4.2	ICW Hook-up
55	4.2.2.4.2.1	Valves, Pipe and Instrumentation
56	4.2.2.4.2.2	Assembly & Test
57	4.2.2.5	*Control System*
58	4.2.2.5.1	I/O Hardware
59	4.2.2.5.2	Software
60	4.2.2.6	*Safety Report*
61	4.2.2.7	*Management and Integration*
62	4.2.2.7.1	Management
63	4.2.2.7.2	Integration
64	4.2.3	***Auxiliary Cryogenic Support Systems***
65	4.2.3.1	Cryogenic Equipment for VLPCs
66	4.2.3.2	Equipment for Nitrogen Purging
67	4.2.4	***Vacuum Systems***
68	4.2.4.1	*Solenoid Vacuum System*
69	4.2.4.1.1	Vacuum Pumps
70	4.2.4.1.2	Valves, Pipes and Instrumentation
71	4.2.4.1.3	Asembly & Test
72	4.2.4.1.3.1	Assembly
73	4.2.4.1.3.2	Test
74	4.2.4.2	*Transfer Line Vacuum System*
75	4.2.4.2.1	Vacuum Pumps
76	4.2.4.2.2	Valves, Pipes and Instrumentation
77	4.2.4.2.3	Assembly & Test
78	4.2.4.2.3.1	Assembly
79	4.2.4.2.3.2	Test
80	4.2.4.3	*Auxiliary Vacuum System*
81	4.2.4.3.1	Vacuum Pumps
82	4.2.4.3.2	Leak Detectors
83	4.2.4.3.3	Valves, Pipes and Instrumentation
84	4.2.4.3.4	Assembly & Test
85	4.2.4.3.4.1	Assembly
86	4.2.4.3.4.2	Test
87	4.2.4.4	*Vacuum Control System*
88	4.2.4.4.1	I/O Hardware
89	4.2.4.4.2	Software
90	4.2.4.5	Safety Report
91	4.2.4.6	Management and Integration
92	4.2.4.6.1	Management
93	4.2.4.6.2	Integration
94	4.2.5	***Safety Report***
95	4.2.6	***Assembly & Test***
96	4.2.6.1	Assembly
97	4.2.6.2	Facility
98	4.2.6.3	Test
99	4.2.7	***Management and Integration***
100	4.2.7.1	Management
101	4.2.7.2	Integration
102	4.2.7.3	Quality Control

Prototype Solenoid $5.4 M

design, management	$.36 M
superconductor	$1.1 M
coil winding	$1.2 M
cryostat + cryogenics	$1.0 M
Same as S.S. supply → power supply for test	$.86 M
monitors	$.14 M
assembly & inspection	$.29 M
excitation test	$.36 M

SDC Solenoid $26.8 M

(Less 20% con

Less Install & Test = [25.7 M] → (22.33 M (21.417 M

Management & Integration	(67) =	design, management	$1.4 M	(1.16
S/C Wire	(6) =	superconductor	$5.7 M	(4.75
Coil Pkg Mats & Winding	(7) =	coil winding	$5.6 M	(4.6
Cryostat System	(23) =	cryostat	$5.4 M	(4.5
Instrumentation	(8) =	monitor system ?	$1.2 M	(1.0
Assembly	(10) =	assembly & inspection	$3.6 M	(3.0
Test	(14) =	excitation test	$2.1 M	(1.75
Transportation to SSCL	(66) =	transportation	$0.71 M	(.59
Goes to WBS Element 8.	⇒	installation, test	$1.1 M	(.91

140 yen = $1

R&D AND CONSTRUCTION SCHEDULE PROPOSED

JFY 1990 4/1/90 – 3/31/91	BASIC R&D FOR CONDUCTOR & WINDING	
JFY 1991 4/1/91 – 3/31/92	PROTOTIPE MAG (1/4 L) DEV.	~$1.2M
	- SUPER CONDUCTOR (4.5 km)	~70%
	- COIL WINDING MACHINE	~30%
JFY 1992 4/1/92 – 3/31/93	- SUPECONDUCTOR (1.5 km)	
	- COIL WINDING	
	- CRYOSTAT ELEMENTS	
JFY 1993 4/1/93 – 3/31/94	- MAGNET ASSEMBLY	
	- 1/4 MAG. TEST (150%)	
JFY 1994 4/1/94 – 3/31/95	MAIN COIL CONSTRUCTION	
5		
1996 4/1/96 – 3/31/97		
JFY 1997 4/1/97 – 3/31/98	INSTALLATION INTO SDC	

WBS 4.1 COSTS

	A	B	C	D	E	F	G	H	I	J	K	L
1	WBS NUMBER	WBS OR ACTIVITY DESCRIPTION	UNIT	QTY	COST EA(K)	EN M/D	ENS M/D	EA M/D	EAM M/D	OR M/D	ORM M/D	AD M/D
3	4.1	*Superconducting Solenoid*										
4	4.1.1	*Superconducting Coil*										
5	4.1.1.1	Support Cylinder										
6	4.1.1.2	Superconducting Wire										
7	4.1.1.3	Coil Package Material and Winding	each	1								
8	4.1.1.4	Cryostat System	each	1								
9	4.1.1.4.1	Vacuum Vessel	each	1								
10	4.1.1.4.1.1	Inner Shell										
11	4.1.1.4.1.2	Outer Shell										
12	4.1.1.4.1.3	End Plates										
13	4.1.1.4.2	Nitrogen Vessel										
14	4.1.1.4.2.1	Inner shell										
15	4.1.1.4.2.2	Outer Shell										
16	4.1.1.4.2.3	End Plates										
17	4.1.1.4.3	Supports										
18	4.1.1.4.3.1	Girder Structure										
19	4.1.1.4.3.2	Radial Supports										
20	4.1.1.4.4	Insulation										
21	4.1.1.5	Instrumentation										
22	4.1.1.6	Assembly & Test	each	1								
23	4.1.1.6.1	Assembly										
24	4.1.1.6.2	Fixtures and Equipment	each	1								
25	4.1.1.6.3	Facility										
26	4.1.1.6.4	Test Equipment										
27	4.1.1.6.5	Test										
28	4.1.1.7	Management and Integration	each	1								
29	4.1.2	*Power Supply System*	each	1								
30	4.1.2.1	Prime Mover										
31	4.1.2.2	Switches and SCRs	each	1		15	5			10		
32	4.1.2.3	Dump Resistors	each	1		75	25			50		
33	4.1.2.4	Quench Protection System	each	2		20	5			20		
34	4.1.2.5	Current Transducers and Instrumentation	each	1		60	20			20		
35	4.1.2.6	AC Cabling and Breakers	each	1		20			10	20		
36	4.1.2.7	Assembly & Test	each	1		20				20		
37	4.1.3	*Control Dewar and Chimney*	each	1		112		112	56	56		
38	4.1.3.1	Valves and Piping	each	1								
39	4.1.3.2	Cryostat										
40	4.1.3.3	Chimney Transfer Line										
41	4.1.3.4	Assembly & Test										
42	4.1.3.4.1	Assembly										
43	4.1.3.4.2	Test										
44	4.1.4	*Controls and Instrumentation*										
45	4.1.4.1	Uninteruptable Power Supply	each	1		224				112		
46	4.1.4.2	Sensors										
47	4.1.4.3	Cables and Connectors										
48	4.1.4.4	Control System										
49	4.1.4.4.1	I/O Hardware										
50	4.1.4.4.2	Software										
51	4.1.4.5	Assembly & Test										
52	4.1.4.5.1	Assembly										
53	4.1.4.5.2	Test										
54	4.1.5	*Safety Report*										
55	4.1.6	*Assembly & Test*	each	1		112		56		20		
56	4.1.6.1	Assembly										
57	4.1.6.2	Fixtures and Equipment	each	1		20		20				
58	4.1.6.2.1	Magnet Support System										
59	4.1.6.2.2	Tooling and Fixtures	each	1		112				112		
60	4.1.6.3	Facility	each	1		112			60	112		
61	4.1.6.4	Test Equipment										
62	4.1.6.5	Test										
63	4.1.7	*Magnetic Field Mapping Equipment*										
64	4.1.7.1	Magnetic Field Monitors	each	1		112	112			224		
65	4.1.7.2	Magnetic Field Mapping Apparatus										
66	4.1.7.3	Assembly & Test										
67	4.1.8	*Transportation to SSCL*										
68	4.1.9	*Management & Integration*	each	1								
69	4.1.9.1	Management	each	1		448						
70	4.1.9.2	Integration										
71	4.1.9.3	Quality Control										
72												
73												
74												
75												
76												
77												
78												
79												
80												
81												
82												
83	TOTALS					1462	177	188	126	776	0	0

WBS 4.1 COSTS

	M	N	O	P	Q	R	S	T	U	V	W	X	Y	Z	AA	AB	AC	AD	AE
1	ADM M/D	TE M/D	TEM M/D	LA M/D	LAM M/D	SEXP(K$)	SMINOR(K$)	SMAJOR(K$)	WBS M/D	WBS MAT (K$)	WBSBASE (K$)	CONTING %	CONTING(K$)	WBS TOTAL(K$)	A (MUF	OR	D	A	M/D RATES
3									0	0	0		0	0	0	0	0	**	EN M/D RATE
4									0	0	0		0	0	0	0	0	**	$460.80
5									0	0	0		0	0	0	0	0	**	
6								4750	0	4750	4750	0.20	950	5700	0	0	0	**	EA M/D RATE
7								4670	0	4670	4670	0.20	934	5604	0	0	0	**	$324.80
8								4500	0	4500	4500	0.20	900	5400	0	0	0	**	
9									0	0	0		0	0	0	0	0	**	DR M/D RATE
10									0	0	0		0	0	0	0	0	**	$324.80
11									0	0	0		0	0	0	0	0	**	
12									0	0	0		0	0	0	0	0	**	AD M/D RATE
13									0	0	0		0	0	0	0	0	**	$232.00
14									0	0	0		0	0	0	0	0	**	
15									0	0	0		0	0	0	0	0	**	TE M/D RATE
16									0	0	0		0	0	0	0	0	**	$300.00
17									0	0	0		0	0	0	0	0	**	
18									0	0	0		0	0	0	0	0	**	
19									0	0	0		0	0	0	0	0	**	LA M/D RATE
20									0	0	0		0	0	0	0	0	**	$120.00
21								1000	0	1000	1000	0.20	200	1200	0	0	0	**	
22									0	0	0		0	0	0	0	0	**	
23								3000	0	3000	3000	0.20	600	3600	0	0	0	**	
24									0	0	0		0	0	0	0	0	**	
25									0	0	0		0	0	0	0	0	**	
26									0	0	0		0	0	0	0	0	**	
27								1750	0	1750	1750	0.20	350	2100	0	0	0	**	
28								1167	0	1167	1167	0.2	233	1400	0	0	0	**	
29									0	0	0		0	0	0	0	0	**	
30			10			2		120	40	122	137	0.20	27	165	*	5	15	**	
31			170			1	70		280	71	172	0.20	26	159	*	51	*	**	
32			50					60	95	60	93	0.20	19	112	*	17	33	**	
33			70				40		180	40	109	0.20	22	131	*	35	69	**	
34			60				40		110	40	77	0.20	15	92	*	21	37	**	
35			159					60	199	60	123	0.20	25	148	*	48	63	**	
36			224				12		560	12	204	0.20	41	244	*	85	*	**	
37								260	0	260	260	0.28	73	333	0	0	0	**	
38									0	0	0		0	0	0	0	0	**	
39									0	0	0		0	0	0	0	0	**	
40									0	0	0		0	0	0	0	0	**	
41									0	0	0		0	0	0	0	0	**	
42									0	0	0		0	0	0	0	0	**	
43									0	0	0		0	0	0	0	0	**	
44			568			10		100	904	110	420	0.28	118	538	*	170	*	**	
45									0	0	0		0	0	0	0	0	**	
46									0	0	0		0	0	0	0	0	**	
47									0	0	0		0	0	0	0	0	**	
48									0	0	0		0	0	0	0	0	**	
49									0	0	0		0	0	0	0	0	**	
50									0	0	0		0	0	0	0	0	**	
51									0	0	0		0	0	0	0	0	**	
52									0	0	0		0	0	0	0	0	**	
53									0	0	0		0	0	0	0	0	**	
54						10	10		188	20	96	0.12	12	108	*	0	76	**	
55									0	0	0		0	0	0	0	0	**	
56			40				20		50	20	48	0.32	15	63	*	12	28	**	
57									0	0	0		0	0	0	0	0	**	
58			60					50	264	50	156	0.32	50	206	*	18	*	**	
59			180				70		464	70	191	0.32	61	253	*	73	*	**	
60									0	0	0		0	0	0	0	0	**	
61									0	0	0		0	0	0	0	0	**	
62									0	0	0		0	0	0	0	0	**	
63			560					250	1008	250	594	0.62	368	962	*	220	*	**	
64									0	0	0		0	0	0	0	0	**	
65									0	0	0		0	0	0	0	0	**	
66									0	0	0		0	0	0	0	0	**	
67								592	0	592	592	0.2	118	710	0	0	0	**	
68						20			448	20	226	0.12	27	254	*	0	*	**	
69									0	0	0		0	0	0	0	0	**	
70									0	0	0		0	0	0	0	0	**	
71									0	0	0		0	0	0	0	0	**	
72									0	0	0		0	0	0	0	0	**	
73									0	0	0		0	0	0	0	0	**	
74									0	0	0		0	0	0	0	0	**	
75									0	0	0		0	0	0	0	0	**	
76									0	0	0		0	0	0	0	0	**	
77									0	0	0		0	0	0	0	0	**	
78									0	0	0		0	0	0	0	0	**	
79									0	0	0		0	0	0	0	0	**	
80									0	0	0		0	0	0	0	0	**	
81									0	0	0		0	0	0	0	0	**	
82									0	0	0		0	0	0	0	0	**	
83	0	0	2111	0	0	43	182	22329	4640	22554	24297	5	5185	29481	*	756	*	**	

	A	B	C	D	E	F	G	H	I	J	K	L	M	N	O	P	Q
1		WBS OR ACTIVITY DESCRIPTION	UNIT	QTY	COST BASIS	EN MD	ENG MD	DA MD	DRAF MD	DR MD	DRN MD	AS MD	ASS MD	TE MD	TES MD	LA MD	LAB MD
3	4.2	*Cryogenic Systems*															
4	4.2.1	***Refrigeration Systems***															
5	4.2.1.1	*Turn Key Helium Refrigerator*															
6	4.2.1.2	*Liquid Nitrogen System*	each	1													
7	4.2.1.2.1	Liquid Nitrogen Dewar															
8	4.2.1.2.2	Valves, Pipes and Instrumentation	each	1		20				10							
9	4.2.1.2.3	Pumps, Subcoolers and Other Equipment	each	1		60				40							
10	4.2.1.2.4	Assembly & Test	each	1		40				20							
11	4.2.1.2.4.1	Assembly															
12	4.2.1.2.4.2	Test Equipment															
13	4.2.1.2.4.3	Test															
14	4.2.1.3	*Control System*															
15	4.2.1.3.1	I/O Hardware	each	1		5									5		
16	4.2.1.3.2	Software															
17	4.2.1.4	*Assembly & Test*															
18	4.2.1.4.1	Assembly	each	1			10		10						20		
19	4.2.1.4.2	Facility															
20	4.2.1.4.3	Test Equipment															
21	4.2.1.4.4	Test															
22	4.2.1.5	*Safety Report*															
23	4.2.1.6	*Management and Integration*	each	1		20											
24	4.2.1.6.1	Management	each	1		224											
25	4.2.1.6.2	Integration															
26	4.2.2	***Transfer Systems***															
27	4.2.2.1	*Cryogenic Transfer Line System*															
28	4.2.2.1.1	End Cans															
29	4.2.2.1.1.1	Valves, Pipes and Instrumentation	each	2		60	10		24	80					90		
30	4.2.2.1.1.2	Assembly & Test															
31	4.2.2.1.2	*Expansion Bowes*															
32	4.2.2.1.2.1	Valves, Pipes and Instrumentation	each	6		60	30		46	80					180		
33	4.2.2.1.2.2	Assembly & Test															
34	4.2.2.1.3	*Transfer Line Sections*															
35	4.2.2.1.3.1	Pipe and Insulation	each	1		60	25		66	60					203		
36	4.2.2.1.3.2	Assembly & Test															
37	4.2.2.1.4	*Assembly & Test*															
38	4.2.2.1.4.1	Assembly	each	1			10		16						64		
39	4.2.2.1.4.2	Test															
40	4.2.2.2	*Gas Piping System*															
41	4.2.2.2.1	Valves, Pipe and Instrumentation	each	1		100	36		90	120					337		
42	4.2.2.2.2	Assembly & Test															
43	4.2.2.2.2.1	Assembly															
44	4.2.2.2.2.2	Test															
45	4.2.2.3	*Electrical Buss System*															
46	4.2.2.3.1	Copper Buss Material and Insulation	each	1		20	5		10	20					23		
47	4.2.2.3.2	Assembly & Test															
48	4.2.2.3.2.1	Assembly															
49	4.2.2.3.2.2	Test															
50	4.2.2.4	*Water Systems*															
51	4.2.2.4.1	LCW Hook up	each	1		10	5								50		
52	4.2.2.4.1.1	Valves, Pipe and Instrumentation															
53	4.2.2.4.1.2	Assembly & Test															
54	4.2.2.4.2	ICW Hook up															
55	4.2.2.4.2.1	Valves, Pipe and Instrumentation															
56	4.2.2.4.2.2	Assembly & Test															
57	4.2.2.5	*Control System*															
58	4.2.2.5.1	I/O Hardware	each	1		5									5		
59	4.2.2.5.2	Software															
60	4.2.2.6	*Safety Report*															
61	4.2.2.7	*Management and Integration*	each	1		30											
62	4.2.2.7.1	Management	each	1		30											
63	4.2.2.7.2	Integration															
64	4.2.3	***Auxiliary Cryogenic Support Systems***															
65	4.2.3.1	Cryogenic Equipment for VLPCs															
66	4.2.3.2	Equipment for Nitrogen Purging	each	1		20				10					10		
67	4.2.4	***Vacuum Systems***	each	1		10				5					10		
68	4.2.4.1	*Solenoid Vacuum System*															
69	4.2.4.1.1	Vacuum Pumps	each	1		20				10					30		
70	4.2.4.1.2	Valves, Pipes and Instrumentation															
71	4.2.4.1.3	Assembly & Test															
72	4.2.4.1.3.1	Assembly															
73	4.2.4.1.3.2	Test															
74	4.2.4.2	*Transfer Line Vacuum System*															
75	4.2.4.2.1	Vacuum Pumps	each	1		10				10					23		
76	4.2.4.2.2	Valves, Pipes and Instrumentation															
77	4.2.4.2.3	Assembly & Test															
78	4.2.4.2.3.1	Assembly															
79	4.2.4.2.3.2	Test															
80	4.2.4.3	*Auxiliary Vacuum System*															
81	4.2.4.3.1	Vacuum Pumps	each	1		20				5					50		
82	4.2.4.3.2	Leak Detectors															
83	4.2.4.3.3	Valves, Pipes and Instrumentation															
84	4.2.4.3.4	Assembly & Test															
85	4.2.4.3.4.1	Assembly															
86	4.2.4.3.4.2	Test															
87	4.2.4.4	*Vacuum Control System*															
88	4.2.4.4.1	I/O Hardware	each	1		10											
89	4.2.4.4.2	Software															
90	4.2.4.5	Safety Report															
91	4.2.4.6	Management and Integration	each	1		35											
92	4.2.4.6.1	Management	each	1		30											
93	4.2.4.6.2	Integration															
94	4.2.5	*Safety Report*															
95	4.2.6	*Assembly & Test*	each	1		112				10							
96	4.2.6.1	Assembly	each	1			28								232		
97	4.2.6.2	Facility															
98	4.2.6.3	Test															
99	4.2.7	*Management and Integration*	each	1		224											
100	4.2.7.1	Management															
101	4.2.7.2	Integration															
102	4.2.7.3	Quality Control															
103																	
104																	
105																	
106																	
107																	
108																	
109																	
110																	
111																	
112																	
113																	
114																	
115																	
116																	
117																	
118																	
119	TOTALS					1235	159	0	264	480	0	0	0	0	1436	0	0

I	R	S	T	U	V	W	X	Y	Z	AE
	SE EFF(LB)	SE ENGRS(LB)	SE MAJORS(LB)	WBS SE	WBS SAT (LB)	WBS MAT (LB)	CONTING %	CONTING(LB)	WBS TOTAL(LB)	MEV RATES
3				0	0	0		0	0	SE MFD RATE
4				0	0	0		0	0	$460.80
5			3900	0	3900	3900	0.15	600	4500	
6				0	0	0		0	0	EA MFD RATE
7			222	30	222	234	0.14	33	267	$324.80
8			110	100	110	151	0.28	42	193	
9			91	60	91	116	0.28	32	148	DR MFD RATE
10				0	0	0		0	0	$324.80
11				0	0	0		0	0	
12				0	0	0		0	0	AD MFD RATE
13				0	0	0		0	0	$232.00
14		10		10	10	14	0.10	1	15	
15				0	0	0		0	0	TE MFD RATE
16				0	0	0		0	0	$300.00
17	3			40	5	19	0.24	5	23	
18				0	0	0		0	0	LA MFD RATE
19				0	0	0		0	0	$120.00
20				0	0	0		0	0	
21				0	0	0		0	0	
22	1			20	1	10	0.12	1	11	
23	4			224	4	107	0.12	13	120	
24				0	0	0		0	0	
25				0	0	0		0	0	
26				0	0	0		0	0	
27				0	0	0		0	0	
28			69	264	69	162	0.24	39	201	
29				0	0	0		0	0	
30				0	0	0		0	0	
31		45		398	45	182	0.24	44	226	
32				0	0	0		0	0	
33				0	0	0		0	0	
34			165	474	165	324	0.24	78	402	
35				0	0	0		0	0	
36				0	0	0		0	0	
37				90	0	29		0	29	
38				0	0	0		0	0	
39				0	0	0		0	0	
40			270	703	270	508	0.16	81	589	
41				0	0	0		0	0	
42				0	0	0		0	0	
43				0	0	0		0	0	
44				0	0	0		0	0	
45		90		80	90	119	0.16	19	138	
46				0	0	0		0	0	
47				0	0	0		0	0	
48				0	0	0		0	0	
49				0	0	0		0	0	
50		6		65	6	28	0.16	4	32	
51				0	0	0		0	0	
52				0	0	0		0	0	
53				0	0	0		0	0	
54				0	0	0		0	0	
55				0	0	0		0	0	
56				0	0	0		0	0	
57		20		10	20	24	0.1	2	26	
58				0	0	0		0	0	
59				0	0	0		0	0	
60	1			30	1	15	0.12	2	17	
61	2			30	2	16	0.12	2	18	
62				0	0	0		0	0	
63				0	0	0		0	0	
64				0	0	0		0	0	
65		10		40	10	25	0.2	5	31	
66		10		25	10	19	0.2	4	23	
67				0	0	0		0	0	
68		32		60	32	53	0.2	11	64	
69				0	0	0		0	0	
70				0	0	0		0	0	
71				0	0	0		0	0	
72				0	0	0		0	0	
73				0	0	0		0	0	
74		30		45	30	45	0.14	6	52	
75				0	0	0		0	0	
76				0	0	0		0	0	
77				0	0	0		0	0	
78				0	0	0		0	0	
79				0	0	0		0	0	
80			90	75	90	116	0.14	16	132	
81				0	0	0		0	0	
82				0	0	0		0	0	
83				0	0	0		0	0	
84				0	0	0		0	0	
85				0	0	0		0	0	
86				0	0	0		0	0	
87		30		10	30	35	0.14	5	39	
88				0	0	0		0	0	
89				0	0	0		0	0	
90	2			35	2	18	0.12	2	20	
91	5			30	5	19	0.12	2	21	
92				0	0	0		0	0	
93				0	0	0		0	0	
94	2			122	2	57	0.12	7	64	
95		10		280	10	99	0.24	24	122	
96				0	0	0		0	0	
97				0	0	0		0	0	
98				0	0	0		0	0	
99	5			224	5	108	0.12	13	121	
100				0	0	0		0	0	
101				0	0	0		0	0	
102				0	0	0		0	0	
103				0	0	0		0	0	
104				0	0	0		0	0	
105				0	0	0		0	0	
106				0	0	0		0	0	
107				0	0	0		0	0	
108				0	0	0		0	0	
109				0	0	0		0	0	
110				0	0	0		0	0	
111				0	0	0		0	0	
112				0	0	0		0	0	
113				0	0	0		0	0	
114				0	0	0		0	0	
115				0	0	0		0	0	
116				0	0	0		0	0	
117				0	0	0		0	0	
118				0	0	0		0	0	
119	27	293	4917	3574	5237	6552	0.16	1093	7645	

	A	B	C	D	E	F	G	H	I	J	K	L	M	N
1	WBS NUMBER	WBS OR ACTIVITY DESCRIPTION	UNIT	QTY	COST EA(K$)	EN M/D	ENM M/D	EA M/D	EAM M/D	DR M/D	DRM M/D	AD M/D	ADM M/D	TE M/D
3		**Solenoid Installation and Utility Hook-Up Work**												
4		Inspect cryostat for damage from shipping					5							
5		Miscellaneous Prep Work					5							
6		Preliminary Leak Vacuum Check					10							
7		Lower Solenoid and CD/Chimney into Hall					3							
8		Move Solenoid and CD/Chimney into Position,Connect Support Structure					5							
9		Survey Solenoid into Final Position					5							
10		Weld and Leak Check the Field Joint					20							
11		Install Power Supply and Electronics for Solenoid					25							
12		**Start Connection to Utilities**												
13		Fabricate and Install U Tubes for Cryo Service					30		15		20			
14		Final System Leak Check					5							
15		Fabricate and Install Electrical Jumpers					15		5		10			
16		Electrical Power Check Out					5							
17		Connect Instrumentation Cables					10							
18		Ring-out Cables and Check out Instrumentation					5							
19		Miscellaneous Connections for Gas and Water					40		10		15			
20		Leak Check Water and Gas Connections					5							
21		**Solenoid System Cooldown and Test**												
22		Preliminary Checkout of Total Cryo System					7							
23		Safety Report Complete, Authorized for Cooldown					10							
24		Startup Cryo System and Cooldown Solenoid					42							
25		Check Cryo System Response Procedures and Measure Heat Load					14							
26		Repair Any Failed Instrumentation					7							
27		Power-up and Quench Test					28							
28		Setup Magnetic Field Measurement Equipment					20							
29		**Magnet at Full Power, Ready to Map Field**												
30		Map Solenoid Field					84							
31		**Solenoid Field Mapping Complete**												
32														
33														
34														
35														
36														
37														
38														
39														
40														
41														
42														
43														
44														
45														
46														
47														
48														
49														
50	TOTALS					0	405	0	30	0	45	0	0	0

	O	P	Q	R	S	T	U	V	W	X	Y	Z	AA	AB	AC	AD	AE
1	TEM M/D	LA M/D	LAM M/D	$EXP(K$)	$MINOR(K$)	$MAJOR(K$)	WBS M/D	WBS MAT (K$)	WBS BASE (K$)	CONTING %	CONTING(K$)	WBS TOTAL(K$)	EDIA (K$)	MANUF (K$)	LABOR (K$)	EDIA %	M/D/ RATES
3							0	0	0		0	0	0	0	0	#NUM!	EN M/D RATE
4	15						20	0	7	0.16	1	8	0	7	7	0.00	$460.80
5	15						20	0	7	0.16	1	8	0	7	7	0.00	
6	30						40	0	14	0.16	2	16	0	14	14	0.00	EA M/D RATE
7	21						24	0	8	0.16	1	9	0	8	8	0.00	$324.80
8	30						35	0	11	0.16	2	13	0	11	11	0.00	
9	15						20	0	7	0.16	1	8	0	7	7	0.00	DR M/D RATE
10	70				5		90	5	35	0.16	6	41	0	30	30	0.00	$324.80
11	85				10		110	10	47	0.16	8	55	0	37	37	0.00	
12							0	0	0		0	0	0	0	0	#NUM!	AD M/D RATE
13	70				15		135	15	61	0.16	10	71	0	46	46	0.00	$232.00
14	15						20	0	7	0.16	1	8	0	7	7	0.00	
15	30				5		60	5	26	0.16	4	30	0	21	21	0.00	TE M/D RATE
16	15						20	0	7	0.16	1	8	0	7	7	0.00	$300.00
17	30						40	0	14	0.16	2	16	0	14	14	0.00	
18	15						20	0	7	0.16	1	8	0	7	7	0.00	LA M/D RATE
19	40				10		105	10	49	0.16	8	56	0	39	39	0.00	$120.00
20	15						20	0	7	0.16	1	8	0	7	7	0.00	
21							0	0	0		0	0	0	0	0	#NUM!	
22	63						70	0	22	0.20	4	27	0	22	22	0.00	
23	126						136	0	42	0.20	8	51	0	42	42	0.00	
24	378						420	0	133	0.20	27	159	0	133	133	0.00	
25	126						140	0	44	0.20	9	53	0	44	44	0.00	
26	63						70	0	22	0.20	4	27	0	22	22	0.00	
27	252						280	0	89	0.20	18	106	0	89	89	0.00	
28	50				10		70	10	34	0.20	7	41	0	24	24	0.00	
29							0	0	0		0	0	0	0	0	#NUM!	
30	756						840	0	266	0.48	127	393	0	266	266	0.00	
31							0	0	0		0	0	0	0	0	#NUM!	
32							0	0	0		0	0	0	0	0	#NUM!	
33							0	0	0		0	0	0	0	0	#NUM!	
34							0	0	0		0	0	0	0	0	#NUM!	
35							0	0	0		0	0	0	0	0	#NUM!	
36							0	0	0		0	0	0	0	0	#NUM!	
37							0	0	0		0	0	0	0	0	#NUM!	
38							0	0	0		0	0	0	0	0	#NUM!	
39							0	0	0		0	0	0	0	0	#NUM!	
40							0	0	0		0	0	0	0	0	#NUM!	
41							0	0	0		0	0	0	0	0	#NUM!	
42							0	0	0		0	0	0	0	0	#NUM!	
43							0	0	0		0	0	0	0	0	#NUM!	
44							0	0	0		0	0	0	0	0	#NUM!	
45							0	0	0		0	0	0	0	0	#NUM!	
46							0	0	0		0	0	0	0	0	#NUM!	
47							0	0	0		0	0	0	0	0	#NUM!	
48							0	0	0		0	0	0	0	0	#NUM!	
49							0	0	0		0	0	0	0	0	#NUM!	
50	2325	0	0	0	55	0	2805	55	963	#REF!	255	1218	0	908	908	0.00	

	A	B	C	D	E	F	G	H	I
1	WBS NUMBER	WBS OR ACTIVITY DESCRIPTION	TECH WT	COST WT	SKED WT	TECH %	COST %	SKED%	COMPOSITE RISK %
3	4.1	*Superconducting Solenoid*							0
4	4.1.1	*Superconducting Coil*	4	1	1	8	10	8	50
5	4.1.1.1	Support Cylinder							0
6	4.1.1.2	Superconducting Wire							0
7	4.1.1.3	Coil Package Material and Winding							0
8	4.1.1.4	*Cryostat System*	4	2	1	6	6	8	[illegible]
9	4.1.1.4.1	Vacuum Vessel							[illegible]
10	4.1.1.4.1.1	Inner Shell							0
11	4.1.1.4.1.2	Outer Shell							0
12	4.1.1.4.1.3	End Plates							0
13	4.1.1.4.2	Nitrogen Vessel							0
14	4.1.1.4.2.1	Inner shell							0
15	4.1.1.4.2.2	Outer Shell							0
16	4.1.1.4.2.3	End Plates							0
17	4.1.1.4.3	Supports							0
18	4.1.1.4.3.1	Girder Structure							0
19	4.1.1.4.3.2	Radial Supports							0
20	4.1.1.4.4	Insulation							0
21	4.1.1.5	Instrumentation							0
[illegible]	[illegible].1.6	Assembly & Test							0
[illegible]	[illegible].1.6.1	Assembly							0
[illegible]	[illegible].1.6.2	Fixtures and Equipment							0
25	4.1.1.6.3	Facility							0
26	4.1.1.6.4	Test Equipment							0
27	4.1.1.6.5	Test							0
28	4.1.2	*Power Supply System*	4	1	1	3	4	4	20
29	4.1.2.1	Prime Mover							0
30	4.1.2.2	Switches and SCRs							0
31	4.1.2.3	Dump Resistors							0
32	4.1.2.4	Quench Protection System							0
33	4.1.2.5	Current Transducers and Instrumentation							0
34	4.1.2.6	AC Cabling and Breakers							0
35	4.1.2.7	Assembly & Test							0
36	4.1.3	*Control Dewar and Chimney*	4	2	1	4	4	4	28
37	4.1.3.1	Valves and Piping							0
38	4.1.3.2	Cryostat							0
39	4.1.3.3	Chimney Transfer Line							0
40	4.1.3.4	Assembly & Test							0
41	4.1.3.4.1	Assembly							0
42	4.1.3.4.2	Test							0
43	4.1.4	*Controls and Instrumentation*	2	2	1	2	10	4	28
44	4.1.4.1	Uninteruptable Power Supply							0
45	4.1.4.2	Sensors							0
46	4.1.4.3	Cables and Connectors							0
47	4.1.4.4	Control System							0
48	4.1.4.4.1	I/O Hardware							0
49	4.1.4.4.2	Software							0
50	4.1.4.5	Assembly & Test							0
51	4.1.4.5.1	Assembly							0
52	4.1.4.5.2	Test							0
53	4.1.5	*Safety Report*	2	1	1	0	4	8	12
54	4.1.6	*Assembly & Test*	4	2	1	3	6	8	32
55	4.1.6.1	Assembly							0
56	4.1.6.2	Fixtures and Equipment							0
57	4.1.6.2.1	Magnet Support System							0
58	4.1.6.2.2	Tooling and Fixtures							0
59	4.1.6.3	Facility							0
60	4.1.6.4	Test Equipment							0
61	4.1.6.5	Test							0
62	4.1.7	*Magnetic Field Mapping Equipment*	4	2	1	6	15	8	62
63	4.1.7.1	Magnetic Field Monitors							0
64	4.1.7.2	Magnetic Field Mapping Apparatus							0
65	4.1.7.3	Assembly & Test							0
66	4.1.8	*Transportation to SSCL*	2	1	1	1	4	8	14
67	4.1.9	*Management & Integration*	2	1	1	0	4	8	12
68	4.1.9.1	Management							0
69	4.1.9.2	Integration							0
70	4.1.9.3	Quality Control							0

WBS 4.2_CONT

1	A WBS NUMBER	B WBS OR ACTIVITY DESCRIPTION	C TECH WT	D COST WT	E SKED WT	F TECH %	G COST %	H SKED%
3	4.2	***Cryogenic Systems***						
4	4.2.1	***Refrigeration Systems***						
5	4.2.1.1	*Turn-key Helium Refrigerator*	2	2	1	2	3	8
6	4.2.1.2	*Liquid Nitrogen System*	4	2	1	3	4	4
7	4.2.1.2.1	Liquid Nitrogen Dewar	4	2	1	1	3	4
8	4.2.1.2.2	Valves, Pipes and Instrumentation						
9	4.2.1.2.3	Pumps, Subcoolers and Other Equipment						
10	4.2.1.2.4	Assembly & Test						
11	4.2.1.2.4.1	Assembly						
12	4.2.1.2.4.2	Test Equipment						
13	4.2.1.2.4.3	Test						
14	4.2.1.3	*Control System*	2	1	1	1	4	4
15	4.2.1.3.1	I/O Hardware						
16	4.2.1.3.2	Software						
17	4.2.1.4	*Assembly & Test*	4	2	1	1	6	8
18	4.2.1.4.1	Assembly						
19	4.2.1.4.2	Facility						
20	4.2.1.4.3	Test Equipment						
21	4.2.1.4.4	Test						
22	4.2.1.5	*Safety Report*	2	1	1	0	4	8
23	4.2.1.6	*Management and Integration*	2	1	1	0	4	8
24	4.2.1.6.1	Management						
25	4.2.1.6.2	Integration						
26	4.2.2	***Transfer Systems***						
27	4.2.2.1	*Cryogenic Transfer Line System*	4	2	1	3	4	4
28	4.2.2.1.1	End Cans						
29	4.2.2.1.1.1	Valves, Pipes and Instrumentation						
30	4.2.2.1.1.2	Assembly & Test						
31	4.2.2.1.2	*Expansion Boxes*						
32	4.2.2.1.2.1	Valves, Pipes and Instrumentation						
33	4.2.2.1.2.2	Assembly & Test						
34	4.2.2.1.3	*Transfer Line Sections*						
35	4.2.2.1.3.1	Pipe and Insulation						
36	4.2.2.1.3.2	Assembly & Test						
37	4.2.2.1.4	*Assembly & Test*						
38	4.2.2.1.4.1	Assembly						
39	4.2.2.1.4.2	Test						
40	4.2.2.2	*Gas Piping System*	2	2	1	2	4	4
41	4.2.2.2.1	Valves and Pipe						
42	4.2.2.2.2	Assembly & Test						
43	4.2.2.2.2.1	Assembly						
44	4.2.2.2.2.2	Test						
45	4.2.2.3	*Electrical Buss System*	2	2	1	2	4	4
46	4.2.2.3.1	Copper Buss Material and Insulation						
47	4.2.2.3.2	Assembly & Test						
48	4.2.2.3.2.1	Assembly						
49	4.2.2.3.2.2	Test						
50	4.2.2.4	*Water Systems*	2	2	1	2	4	4
51	4.2.2.4.1	LCW Hook-up						
52	4.2.2.4.1.1	Valves, Pipe and Instrumentation						
53	4.2.2.4.1.2	Assembly & Test						
54	4.2.2.4.2	ICW Hook-up						
55	4.2.2.4.2.1	Valves, Pipe and Instrumentation						
56	4.2.2.4.2.2	Assembly & Test						
57	4.2.2.5	*Control System*	2	1	1	1	4	4
58	4.2.2.5.1	I/O Hardware						
59	4.2.2.5.2	Software						
60	4.2.2.6	*Safety Report*	2	1	1	0	4	8
61	4.2.2.7	*Management and Integration*	2	1	1	0	4	8
62	4.2.2.7.1	Management						
63	4.2.2.7.2	Integration						
64	4.2.3	***Auxiliary Cryogenic Support Systems***						
65	4.2.3.1	Cryogenic Equipment for VLPCs	2	2	1	2	4	8
66	4.2.3.2	Equipment for Nitrogen Purging	2	2	1	2	4	8
67	4.2.4	***Vacuum Systems***						
68	4.2.4.1	*Solenoid Vacuum System*	2	2	1	2	4	8
69	4.2.4.1.1	Vacuum Pumps						
70	4.2.4.1.2	Valves, Pipes and Instrumentation						
71	4.2.4.1.3	Asembly & Test						
72	4.2.4.1.3.1	Assembly						
73	4.2.4.1.3.2	Test						
74	4.2.4.2	*Transfer Line Vacuum System*	2	2	1	2	4	2
75	4.2.4.2.1	Vacuum Pumps						
76	4.2.4.2.2	Valves, Pipes and Instrumentation						
77	4.2.4.2.3	Assembly & Test						
78	4.2.4.2.3.1	Assembly						
79	4.2.4.2.3.2	Test						
80	4.2.4.3	*Auxiliary Vacuum System*	2	2	1	2	4	2
81	4.2.4.3.1	Vacuum Pumps						
82	4.2.4.3.2	Leak Detectors						
83	4.2.4.3.3	Valves, Pipes and Instrumentation						
84	4.2.4.3.4	Assembly & Test						
85	4.2.4.3.4.1	Assembly						
86	4.2.4.3.4.2	Test						
87	4.2.4.4	*Vacuum Control System*	2	2	1	1	4	4
88	4.2.4.4.1	I/O Hardware						
89	4.2.4.4.2	Software						
90	4.2.4.5	Safety Report	2	1	1	0	4	8
91	4.2.4.6	Management and Integration	2	1	1	0	4	8
92	4.2.4.6.1	Management						
93	4.2.4.6.2	Integration						
94	4.2.5	***Safety Report***	2	1	1	0	4	8
95	4.2.6	***Assembly & Test***	4	2	1	1	6	8
96	4.2.6.1	Assembly						
97	4.2.6.2	Facility						
98	4.2.6.3	Test						
99	4.2.7	***Management and Integration***	2	1	1	0	4	8
100	4.2.7.1	Management						
101	4.2.7.2	Integration						
102	4.2.7.3	Quality Control						

	A	B	C	D
1	WBS NUMBER	WBS TITLE	QUANTITY	DESCRIPTION
2	4.1	Superconducting Solenoid		
3	4.1.1	Superconducting Coil	1	Superconducting solenoid coil (dimensions ~3.4m dia. x 8.5m len.).
4				Includes the cryostat costs for the vacuum vessel, LIN shield, and support. Com-
5				bines with the control dewar & chimney to form the total magnet package.
6				Interfaces with other parts of the detector with respect to mounting and assembly.
7				[Fabricated in Japan]
8	4.1.2	Power Supply System	1	Includes all elements required to power, protect and monitor the coil package
9				including the power supply (2-5KA supplies), quench protection circuitry, dump
10				resistors (fast & slow) and instrumentation.
11				Interfaces with 480 VAC power panels in counting room.
12	4.1.3	Control Dewar & Chimney	1	Provides the connection from the transfer line system to the coil cryostat
13				and contains the power leads, subcooler and interconnect piping.
14				Interfaces with the detector components as it makes a "straight shot" through
15				the muon and calorimeter systems.
16				[Assembled with the rest of coil cryostat @ SSCL]
17	4.1.4	Controls & Instrumentation	1	Includes temperature, pressure and voltage sensors for the magnet package,
18				an uninteruptable power supply to allow for continuous control operation and
19				associated cabling. The cryogenic control system is part of the overall
20				refrigerator distributed digital control system and so this element only covers
21				the additional costs associated with magnet data channels.
22				Interfaces with the DDCS controls supplied by the refrigerator manufacturer.
23	4.1.5	Safety Report	1	A compilation of component lists, operating procedures, hazard and failure mode
24				and effects analysis, etc.
25				Interfaces with safety reports generated for the subsystems to form a
26				comprehensive analysis.
27	4.1.6	Assembly & Test	1	Includes the coil support system, used to mount to the detector, the necessary
28				specialty fixtures and equipment required for assembly and the test equipment.
29				Interfaces with the rest of the assembly of the detector.
30	4.1.7	Magnetic Field	1	Incorporates all elements of designing, fabrication, and testing a system
31		Mapping Equipment		to map the solenoids central field. Also includes the necessary field monitor equip.
32				Interfaces only in the final detector assembly steps.

	A	B	C	D
33	4.1.8	Transportation to SSCL	1	Includes all costs associated with shipping the solenoid assembly from
34				Japan to SSCL.
35	4.1.9	Management & Integration	-	Includes all costs associated with managing the design, fabrication and testing of
36				the solenoid system. Travel to Japan is included since interfacing with the initial
37				construction and testing of the solenoid is essential.

	A	B	C	D
1	WBS NUMBER	WBS TITLE	QUANTITY	DESCRIPTION
2	4.2.1	Refrigeration Systems		
3	4.2.1.1	Turn-Key Helium Refrigerator	1	Includes all costs associated with procuring a refrigeration system (~1.5KW) which is
4				installed and acceptance tested.
5				Interfaces with the surface facilities located in the utility building.
6	4.2.1.2	Liquid Nitrogen System	1	Includes the liquid nitrogen storage dewar (~20,000 gal.), transfer line and connections
7				to the refrigerator.
8				Interfaces to the refrigerator and surface facilities of the utility building.
9	4.2.1.3	Control System	1	The DDCS is part of element 4.2.1.1 and so only the costs associated with the LIN
10				system data channels appears here.
11				Interfaces with the main control system of the refrigerator and the experiment.
12	4.2.1.4	Assembly & Test	1	Includes costs associated with final assembly and testing of these elements into a
13				complete refrigerator system.
14				Interfaces with surface facilities in the utility building.
15	4.2.1.5	Safety Report	1	A compilation of component lists, operating procedures, hazard and failure mode and
16				effects analysis, etc.
17				Interfaces with safety reports generated for the subsystems to form a comprehensive analysis.
18	4.2.1.6	Management & Integration	1	Includes the necessary management and integration for the following: The status of the
19				procured subsystems and fabrication of the liquid nitrogen sybsystem.
20	4.2.2	TRANSFER SYSTEMS		
21	4.2.2.1	Cryogenic Transfer	1	Includes all elements associated with the transfer lines used to connect the refrigerator to the
22		Line System		solenoid. End cans, expansion boxes and straight sections fabricated then assembled @ SSCL.
23				Interfaces with the surface and hall facilities.
24	4.2.2.2	Gas Piping Systems	1	Piping systems for warm gas supplies and returns including the lead flows, nitrogen vents
25				and quench header. Connects from the top of the detector to the utility building.
26				Interfaces with the surface and hall layout.
27	4.2.2.3	Electrical Buss System	1	Insulated, water cooled copper pipe which connects the power supply system to the
28				control dewar. Includes all necessary piping supports.
29				Interfaces with the surface and hall layout.
30	4.2.2.4	Water Systems	1	Includes the necessary hook-ups to the ICW & LCW manifolds provided by Mechanical
31				Integration. Costs include piping, valves & instrumentation.
32				Interfaces with the utility building facilities.
33	4.2.2.5	Control System	1	The DDCS is part of element 4.2.1.1 and so only the costs associated with the Transfer
34				Systems data channels appears here.
35				Interfaces with the main control system of the refrigerator and the experiment.
36	4.2.2.6	Safety Report	1	A compilation of component lists, operating procedures, hazard and failure mode
37				and effects analysis, etc.
38				Interfaces with safety reports generated for the subsystems to form a comprehensive

	A	B	C	D
39				analysis for the Transfer Systems.
40	4.2.2.7	Management & Integration	1	Includes the necessary management of the separate transfer subsystems to assure a
41				comprehensive piping package connection from the surface to the hall.
42	4.2.3	AUX. CRYOGENIC SUPPORT SYSTEMS		
43	4.2.3.1	Cryo. Equipment for VLPC's	1	At this time, this element contains only the costs associated with providing additional
44				bayonet connections at the end can of the transfer line in the hall.
45				Costs associated with the VLPC cryogenic equipment, ie dewars, cryostats and connection
46				tubes are shown elsewhere.
47				Interfaces with the VLPC cryogenic system.
48	4.2.3.2	Equipment for Nitrogen Piping	1	At this time, this element contains only the costs associated with additional piping, valves
49				and instrumentation needed to supply nitrogen gas to a gas manifold which is costed
50				under Mechanical Integration.
51				Interfaces with "mechanical integration" manifold to supply gas to a variety of places in the detector.
52	4.2.4	VACUUM SYSTEMS		
53	4.2.4.1	Solenoid Vacuum System	1	Turbo pump system for evacuation of the cryostat vacuum insulation space.
54				Includes pump cost, piping and valves to assure reliable isolation.
55				Interface with detector and hall layout.
56	4.2.4.2	Transfer Line Vacuum System	1	Turbo pump system for evacuation of the transfer line vacuum insulation space. Includes
57				pump cart, piping and valves to assure reliable isolation.
58				Interfaces with detector and hall layout.
59	4.2.4.3	Auxilliary Vacuum System	1	Includes the additional turbo and rough pump, leak detectors, piping, valves and
60				instrumentation required for operation and maintenance of the cryogenic systems.
61				Interfaces with utility building facilities.
62	4.2.4.4	Vacuum Control System	1	The DDCS is part of element 4.2.1.1 and so only the costs associated with the Vacuum
63				Systems data channels appears here.
64				Interfaces with the main control system of the refrigerator and the experiment.
65	4.2.4.5	Safety Report	1	A compilation of component lists, operating procedures, hazard and failure mode and effects
66				analysis, etc.
67				Interfaces with safety reports generated for the subsystems to form a comprehensive analysis for
68				the vacuum systems.
69	4.2.4.6	Management & Integration	1	Includes the necessary management of the vacuum subsystems to assure the coordination
70				of the separate specifications so as to end up with a consistent vacuum system.
71	4.2.5	Safety Report	1	Combines all the subsystem reports into a comprehensive safety report dealing with the
72				total cryogenic system. Adds the necessary sections due to subsystem interactions.
73	4.2.6	Assembly & Test	1	Includes all costs associated with combining all of the major subsystems into a cryogenic system
74				capable of operation from a central control point.
75	4.2.7	Management & Integration	1	Includes the necessary management of all subsystems into a cohesive refrigeration system
76				and the costs associated with quality control.

GENERAL OVERVIEW OF SCHEDULE

TO BUILD "FINAL" MAGNET:

"START" TO "TEST IN AIR"	2½ YEARS
SHIP & INSTALL	6 MONTHS

ELECTRICAL EQUIPMENT:

DESIGN & PROCURE	1 YEAR
ASSEMBLE	1 YEAR

HELIUM SYSTEM:

DESIGN & PROCURE	2½ YEARS
INSTALL	8 MONTHS
TEST	2 MONTHS

NITROGEN SYSTEM:

DESIGN & PROCURE	1½ YEARS
INSTALL	8 MONTHS
TEST	1 MONTH

TRANSFER LINES:

DESIGN & BUILD	1½ YEARS
INSTALL	6 MONTHS
TEST	1 MONTH

NOTE: DIFFERENCES BETWEEN CALENDER TIME & COSTED TIME

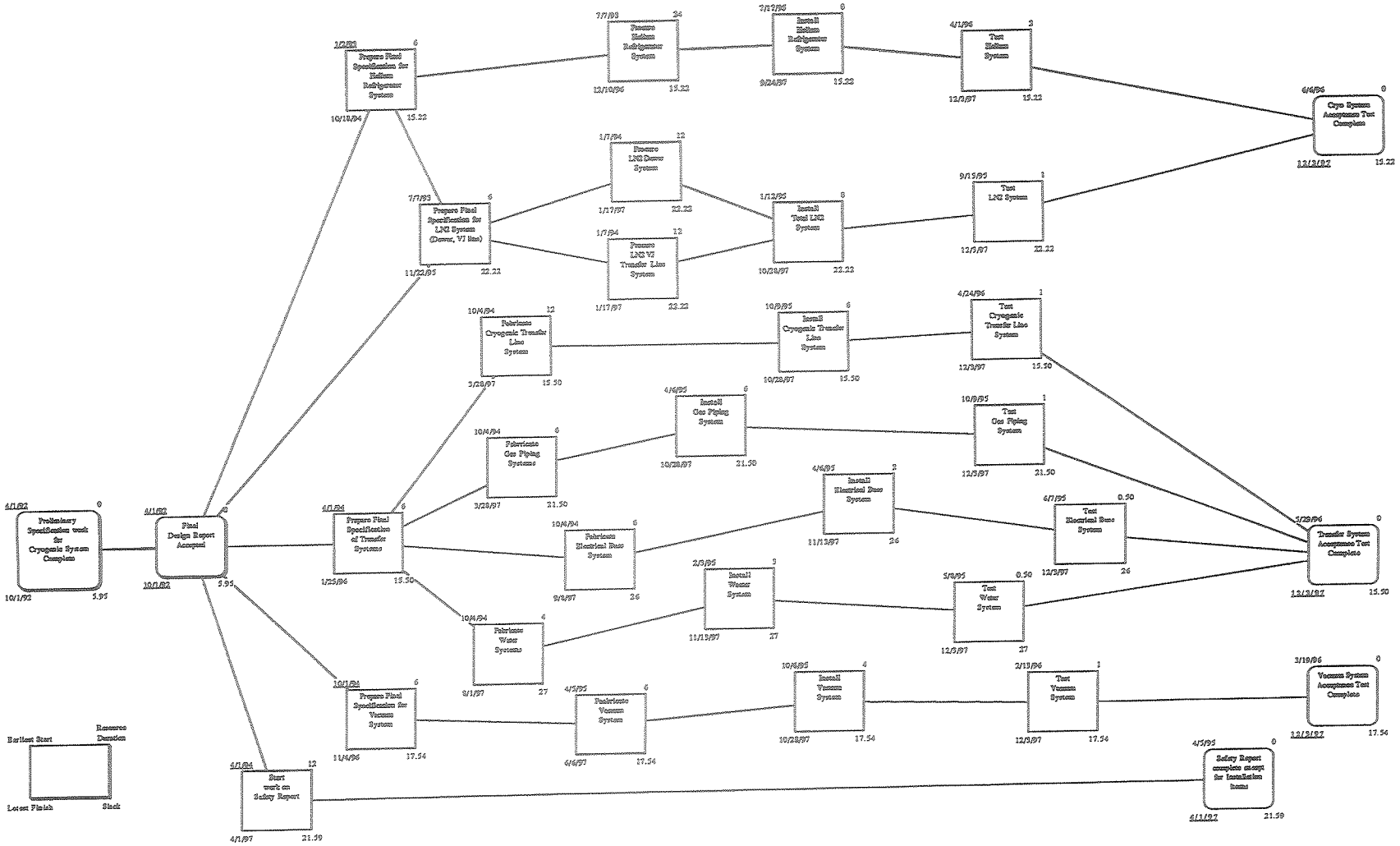
Preliminary Specification work for Cryogenic System Complete
Final Design Report Accepted
Prepare Final Specification for Helium Refrigerator System
Prepare Final Specification for LN2 System (Denver, VI line)
Prepare Final Specification of Transfer Systems
Prepare Final Specification for Vacuum System
Start work on Safety Report
Fabricate Cryogenic Transfer Line System
Fabricate Gas Piping Systems
Fabricate Electrical Bus System
Fabricate Water Systems
Fabricate Vacuum System
Install Gas Piping System
Install Electrical Bus System
Install Water System
Install Vacuum System
Install Cryogenic Transfer Line System
Install Total LN2 System
Install Helium Refrigerator System
Test Cryogenic Transfer Line System
Test Gas Piping System
Test Electrical Bus System
Test Water System
Test Vacuum System
Test LN2 System
Test Helium System
Safety Report complete except for installation items
Cryo System Acceptance Test Complete
Transfer System Acceptance Test Complete
Vacuum System Acceptance Test Complete
Earliest Start
Resource Duration
Latest Finish
Slack

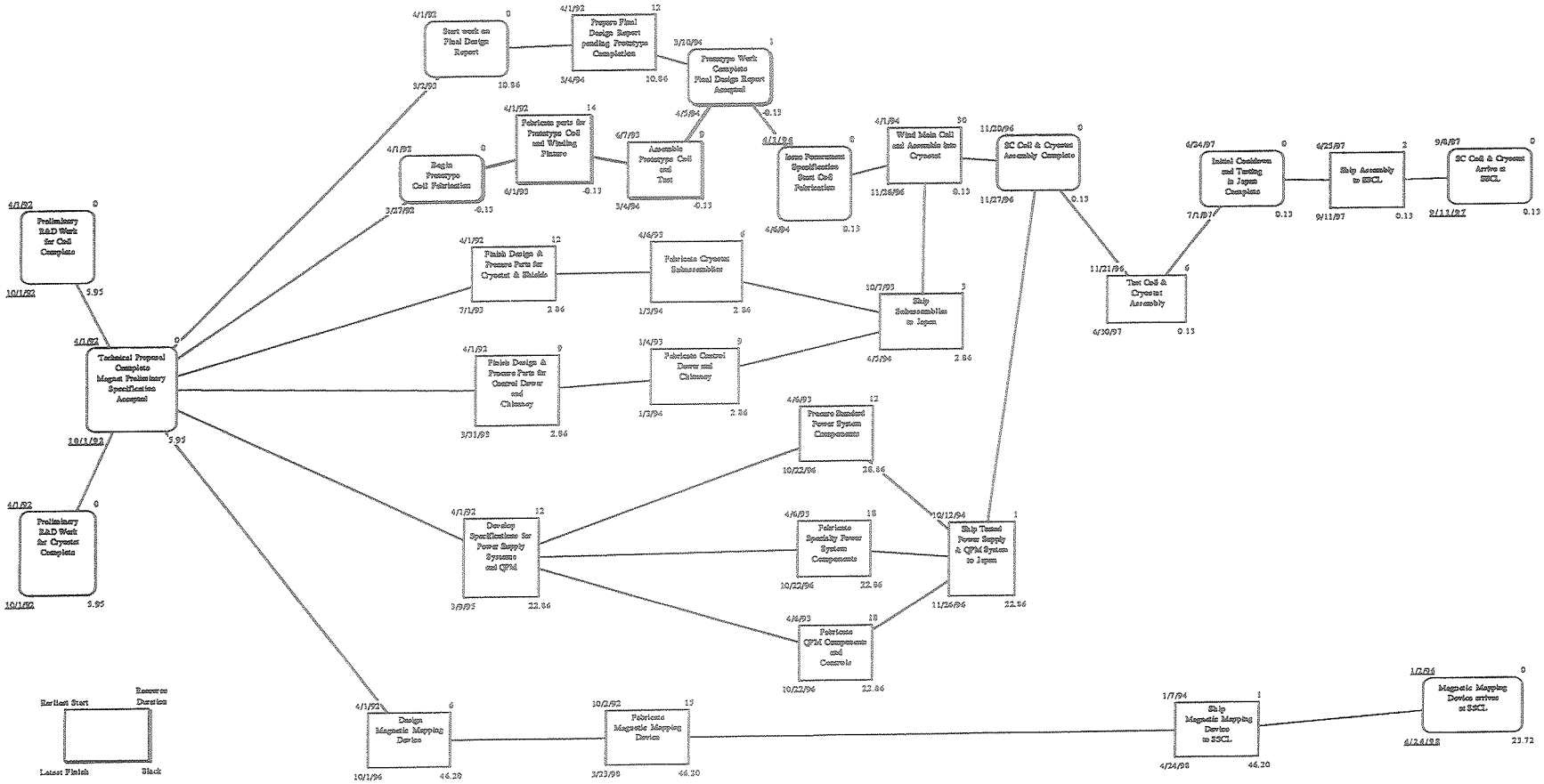
Preliminary R&D Work for Coil Complete
Preliminary R&D Work for Cryostat Complete
Technical Proposal Complete Magnet Preliminary Specification Accepted
Start work on Final Design Report
Prepare Final Design Report pending Prototype Completion
Prototype Work Complete Final Design Report Accepted
Begin Prototype Coil Fabrication
Fabricate parts for Prototype Coil and Winding Fixture
Assemble Prototype Coil and Test
Issue Procurement Specification Start Coil Fabrication
Wind Main Coil and Assemble into Cryostat
SC Coil & Cryostat Assembly Complete
Initial Cooldown and Testing in Japan Complete
Ship Assembly to SSCL
SC Coil & Cryostat Arrive at SSCL
Finish Design & Procure Parts for Cryostat & Shields
Fabricate Cryostat Subassemblies
Ship Subassemblies to Japan
Test Coil & Cryostat Assembly
Finish Design & Procure Parts for Control Dewar and Chimney
Fabricate Control Dewar and Chimney
Procure Standard Power System Components
Develop Specifications for Power Supply Systems and QPM
Fabricate Specialty Power System Components
Ship Tested Power Supply & QPM System to Japan
Fabricate QPM Components and Controls
Design Magnetic Mapping Device
Fabricate Magnetic Mapping Device
Ship Magnetic Mapping Device to SSCL
Magnetic Mapping Device arrives at SSCL
Earliest Start
Resource Duration
Latest Finish
Slack

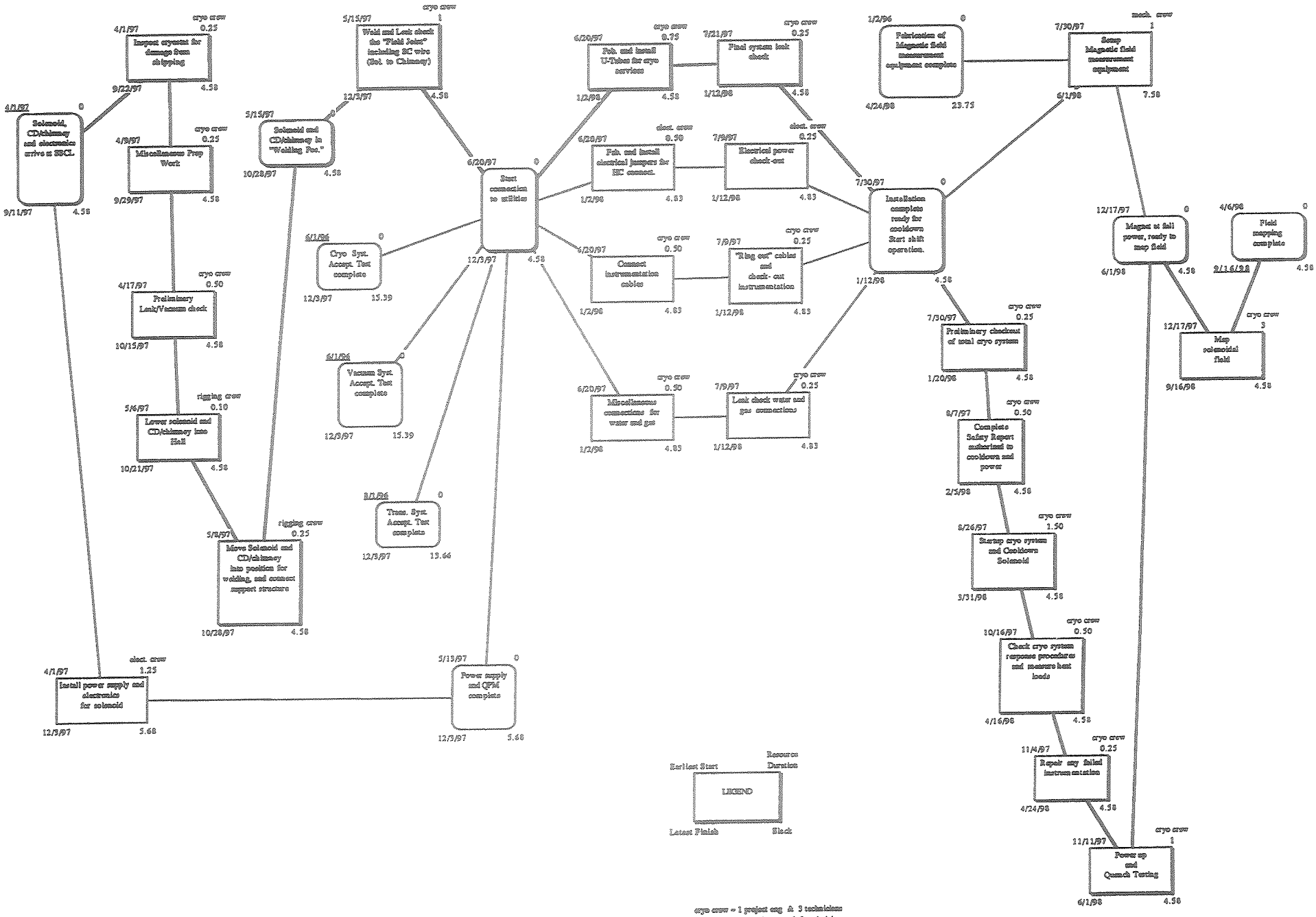

cryo crew = 1 project eng & 3 technicians
elect. crew = 1 project eng & 3 technicians
mech. crew = 1 project eng & 3 technicians
Time periods are displayed in months
NOTE: Shift operations require 4 crews for 24 hr coverage.

SC Solenoid Installation Schedule

B. Snook, FNAL
5/24/91