SDC Solenoid Design Note #136

R & D PLAN AND STATUS

OF THE

SDC THIN SUPERCONDUCTING SOLENOID

A. YAMAMOTO (KEK)

R. KEPHART (FNAL)

---

* SDC MEETING HELD AT KEK, MARCH 5 1991

R & D PROPOSAL FOR THE

SDC THIN SOLENOID

DEVELOPMENT OF A

PROTOTYPE MAGNET W/

- FULL SIZE IN DIAMETER
- 1/4 SIZE IN LENGTH

- TO EVALUATE SUPPORTING STR. AGAINST F_z
- TO ESTABLISH COIL FAB. TECHNIQUE.

[図3]

SDC THIN SOLENOID R&D SCHEDULE (PLAN)

ＳＤＣ薄肉超伝導電磁石の開発・建設スケジュール（案）		
	BASIC R&D	
ＪＦＹ１９９０ 4/1/90 - 3/31/91	高強度アルミ安定化超伝導線の基礎開発 コイルの巻線・電磁力支持技術の基礎開発	STRONG. COND. WINDING
	PROTOTYPE (1/4 L) DEVELOPMENT	
ＪＦＹ１９９１ 4/1/91 - 3/31/92	プロトタイプコイル用超伝導線材の開発 プロトタイプコイル巻線機の開発、コイル部品製作	LONG COND. WINDING FAC. PARTS.
ＪＦＹ１９９２ 4/1/92 - 3/31/93	プロトタイプコイル巻線、組立 クライオスタット部品製作	COIL WINDING. PARTS FOR CRYOS.
ＪＦＹ１９９３ 4/1/93 - 3/31/94	コイル、クライオスタット組立 冷却、励磁試験 評価、Ｒ＆Ｄ報告書作成、デザインレポート完成	ASSEMBLY COOL.D. EXCIT. TEST REPORT
	MAIN MAG. FAB.	
ＪＦＹ１９９４ 4/1/94 - 3/31/95	超伝導電磁石・実機、製作 超伝導線材 コイル巻線 クライオスタット部品製作	MAIN COIL WINDING
ＪＦＹ１９９５ 4/1/95 - 3/31/96	超伝導電磁石・実機、組立 コイル・クライオスタット組立	ASSEMBLY
ＪＦＹ１９９６ 4/1/96 - 3/31/97	実機、冷却・励磁試験（空芯条件） ＳＳＣＬへの搬送 ＳＤＣ構造体・鉄ヨークへの組み込み	TEST IN AIR
ＪＦＹ１９９７ 4/1/97 - 3/31/98	鉄芯内での冷却・励磁試験 磁場測定 完成	TEST IN IRON

3．予算

プロトタイプ超伝導電磁石の開発計画を３年度計画を想定し、以下の予算を必要とする。

（単位：千円）

		JFY1991 4/1/91-3/31/92	JFY1992 4/1/92-3/31/93	JFY1993 4/1/93-3/31/94
ENG. DESIGN	設計費	20,000	20,000	10,000
SUPER COND.	超伝導線材	120,000	40,000	
COIL WINDING	コイル巻線			
WINDING FAC.	巻線機	60,000	20,000	
SUP. CYLINDER	シリンダー等	20,000	30,000	
WINDING	巻線		20,000	
ASSEMBLY	キュア、組立、試験		20,000	
CRYOSTAT	クライオスタト			
ELEMENT / PARTS	部品		30,000	
HONETCOMB	ハニカム		50,000	
ASSEMBLY	組立、試験		20,000	
GEN. ASS / INSP.	全体組立、試験			20,000
MONITOR	モニター			
SENSORS	センサー		10,000	
DAQ	データ収集機器		10,000	
P/S (≧12,000A)	電源			120,000
COOLING / DEW.	予冷機，ﾃﾞｭﾜｰ等			60,000
TEST	冷却・励磁試験			50,000
COOL DOWN				
EXCIT.				
	年次経費	220,000	270,000	260,000
	全体額	≧180,000 assigned in last evening. ( )		750,000

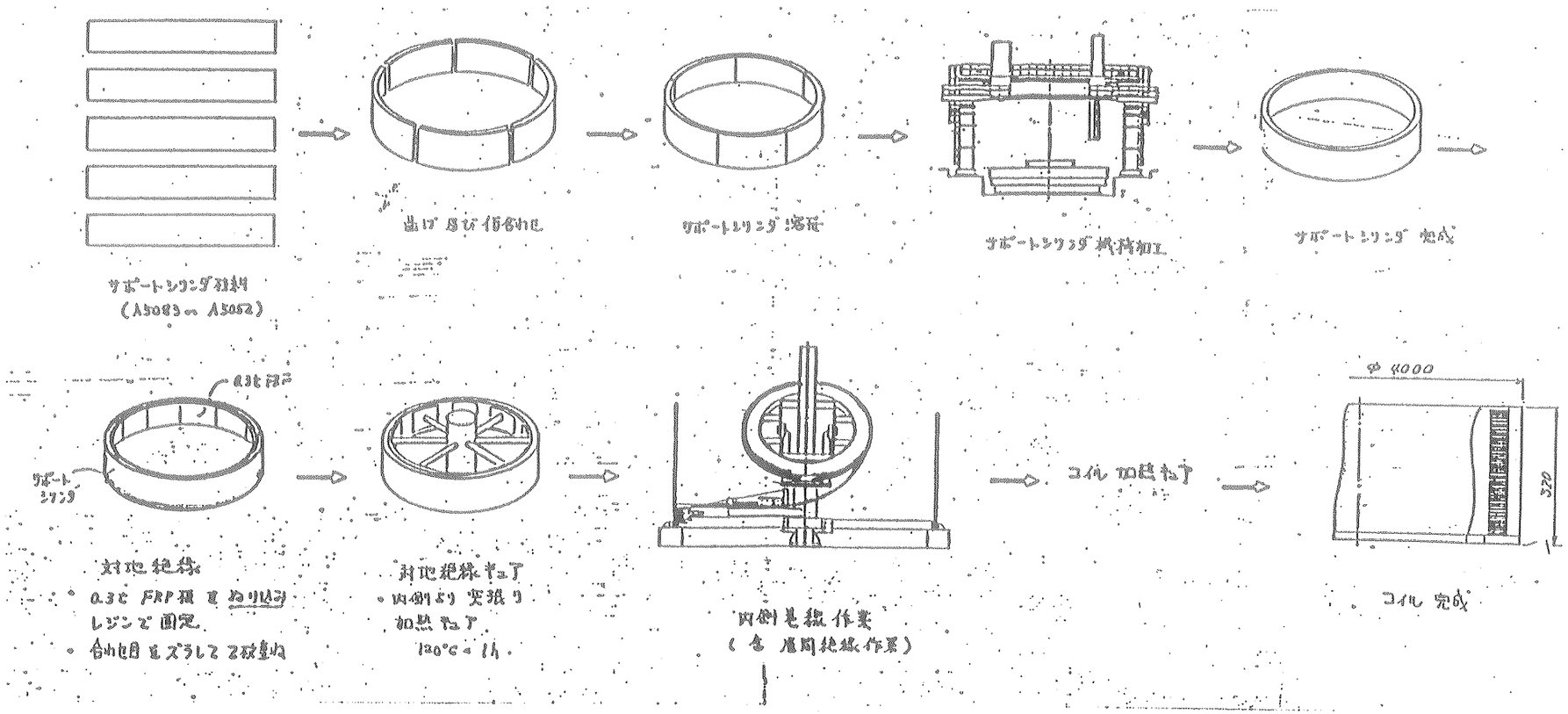

図-4

R&D FOR COIL WINDING IN JFY90

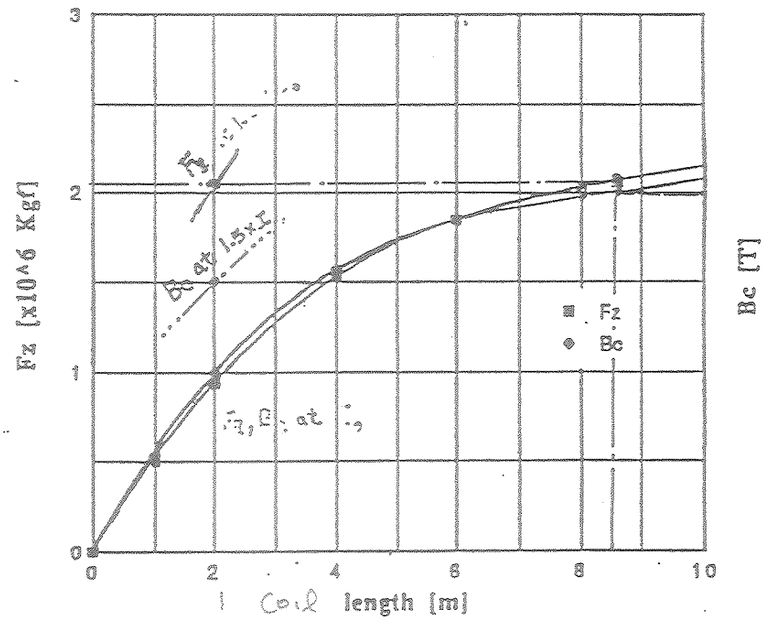

図９：　プロトタイプ電磁石におけるコイル長と磁場、電磁力の関係

Field & EMForce

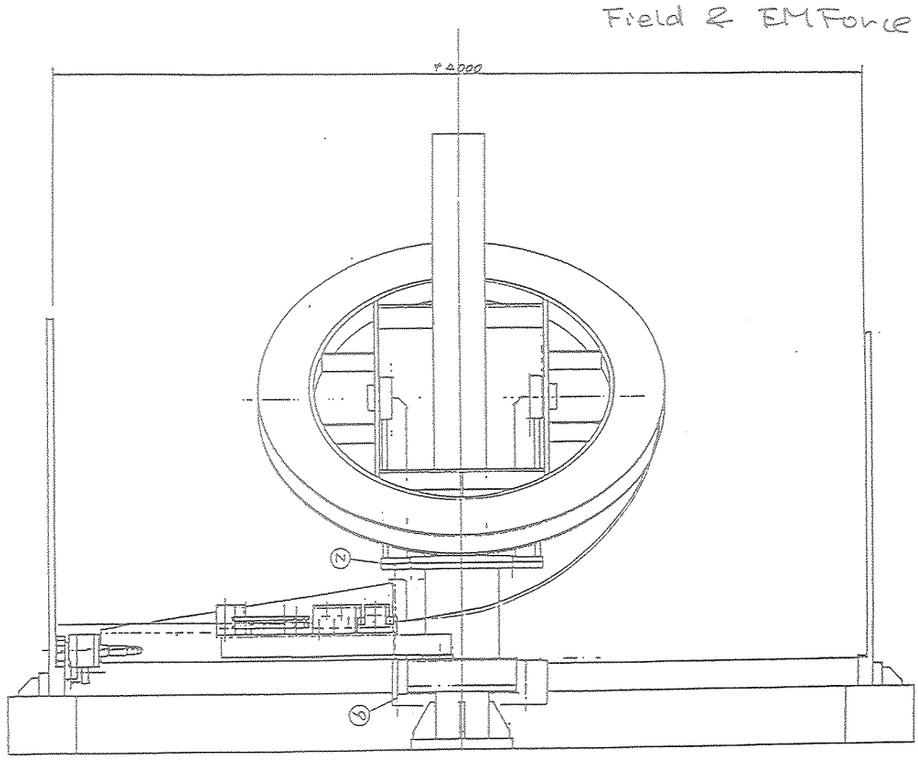

図１０：　プロトタイプ電磁石用コイル巻線機の概観図

SCHEMATIC VIEW OF WINDING FACILITY

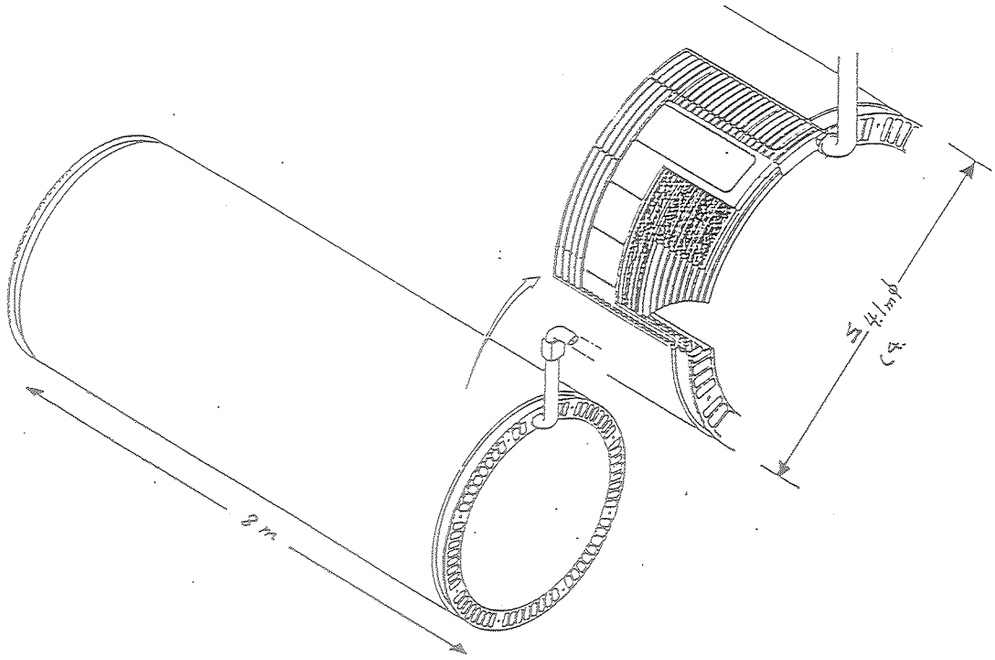

図７：　SDC超伝導ソレノイド電磁石の概観図

CONCEPTUAL VIEW OF SDC THIN SOLENOID

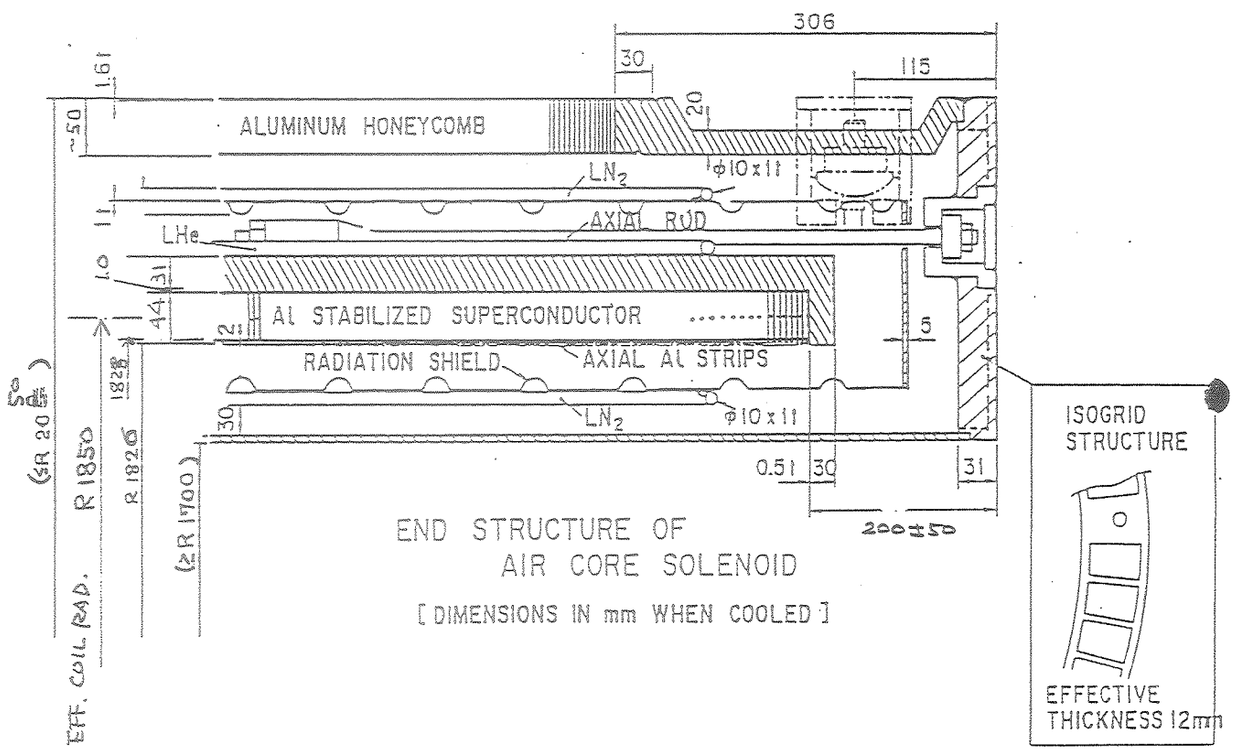

図８：　SDC超伝導ソレノイド電磁石の端部断面図

CROSS SECTION AT THE END OF THE COIL

From: FNALD::KEPHART 1-MAR-1991 13:17:15.55
To: KEKVAX::AKIRA
CC:
Subj: Questions to discuss

Akira,

In addition to discussing what we have been doing at FNAL and your activities in Japan, we made up a list of questions that would be useful to discuss with you during my visit in order to get started on a design report for the coil. I am sending them now so you could consider them a bit in advance.

Also I want to confirm that I will meet you on Monday at 09:30 AM in the Shinbashi Dai-Ichi hotel to travel to Toshiba.

See you Monday,
Bob

List of QUESTIONS

Feburary 28, 1991

Overall Dimensions

Coil ~~ID~~ IR --- 1828

Coil ~~OD~~ OR --- 1828 + 44 = 1872

Outer support cylinder ~~ID~~ IR 1872 + 1 = 1873

Outer support cylinder ~~OD~~ OR 1873 + 31 = 1904

Coil length (active) 7600

Length of outer support cylinder ~7660

Electrical Parameters

Operating current ~8000A

Number of effective turns in coil ~7600 / 456

Design field, axial component on axis at center 2.0 T

Operating current as fraction of 4.2-K short-sample current, along load line 60~70 %

Self inductance of coil

Mutual inductance between coil and outer support cylinder

Number of joints in conductor 8 (?)

Typical joint resistance at operating temperature and field $\leq 10^{-9}\,\Omega$

Electrical Insulation

Insulation on conductor, type and thickness EPXY/Glass/kapton/EPOXY (t ≃ 0.15)

Insulation between coil and outer support cylinder, type and thickness EPXY/Glass/EPOXY

Conductor Parameters

Overall conductor dimensions ~ 4.3 x 44 mm

Al:Cu:NbTi ratio

Allowable stress in as-built coil — 6 kgf/mm²

Temperature margin to 4.2 K — ≥ 1.0 K

Results of Quench Analysis

Fast discharge resistance — ≃ 0.1 Ω

Hot spot temperature vs time; max hot spot temperature

I(coil) vs time; I(osc) vs time

R(coil) vs time

P(coil) vs time; P(osc) vs time; P(total) vs time

T(coil) vs time; T(ocs) vs time

Equilibrium temperature, T(coil) = T(ocs)

Heat Loads

Steady-state heat load from each conductor joint; total for all joints

Other steady-state heat sources generated in the coil, if any

Eddy-current heat load during charging

Random transient heat loads, caused by magnetic or mechanical instabilities

Mechanical Parameters of Coil and Outer Support Cylinder

For what axial compression are you designing the coil? ✓

Expected axial modulus of as-built coil — 6500 ~ 7000 kgf/mm²

Aluminum alloy planned for outer support cylinder — 5083

How much axial preload will be applied to the coil during winding, how much will remain when the coil is completed and how much when it is cooled down?

What do the ends of the coil-outer support cylinder look like? (For applying the axial preload.)

How much radial preload to you expect the winding fixture will apply?

Coil Cooling Requirements

Desired temperature difference between conductor and the warmest place on the outer support cylinder during steady-state operation — ≤0.5 K

At what temperature do you wish the outer support cylinder maintained during steady-state operation? — ≤ 0.5 K

How uniform do you wish the temperature of the outer support cylinder to be during steady-state operation? — ≤ 0.5 K

What should be the outer support cylinder temperature during a charge? How uniform should it be? — ≤ 5 K ±0.2

What is the maximum amount of liquid helium in the cooling tube attached to the outer support cylinder which provides a sufficiently — order of 100 ℓ ?

fast quench propagation rate to limit the maximum hot spot temperature to the desired value?

Do you have a preference as to the cooling scheme--forced two-phase, supercritical or thermosiphon?

either

We are thinking of operating the radiation shields and thermal intercepts with cold helium gas at about 50 K. Do you have any comments on this idea? The supports will also have a 4.5-K intercept.

b/w 50 ~ 70K

→ Possible

We may need a separate cool-down circuit on the outer support cylinder; do you have any comments?

If thermosiphon, it will be automatic

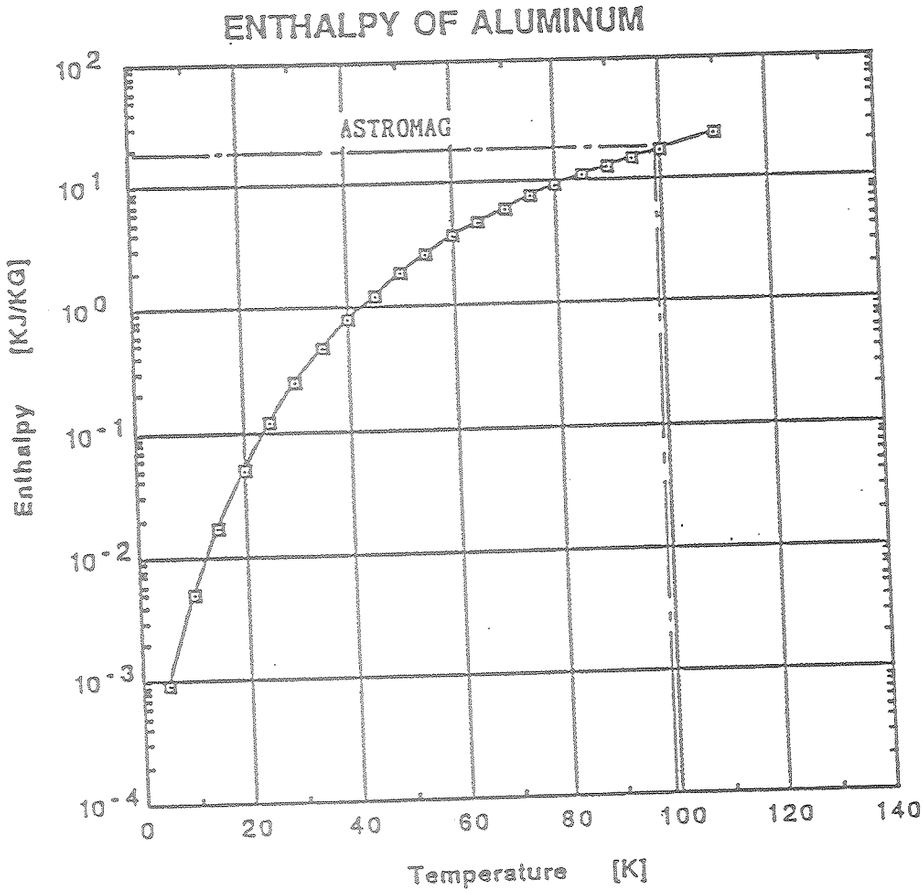

図１．アルミ材の温度とエンタルピーの関係

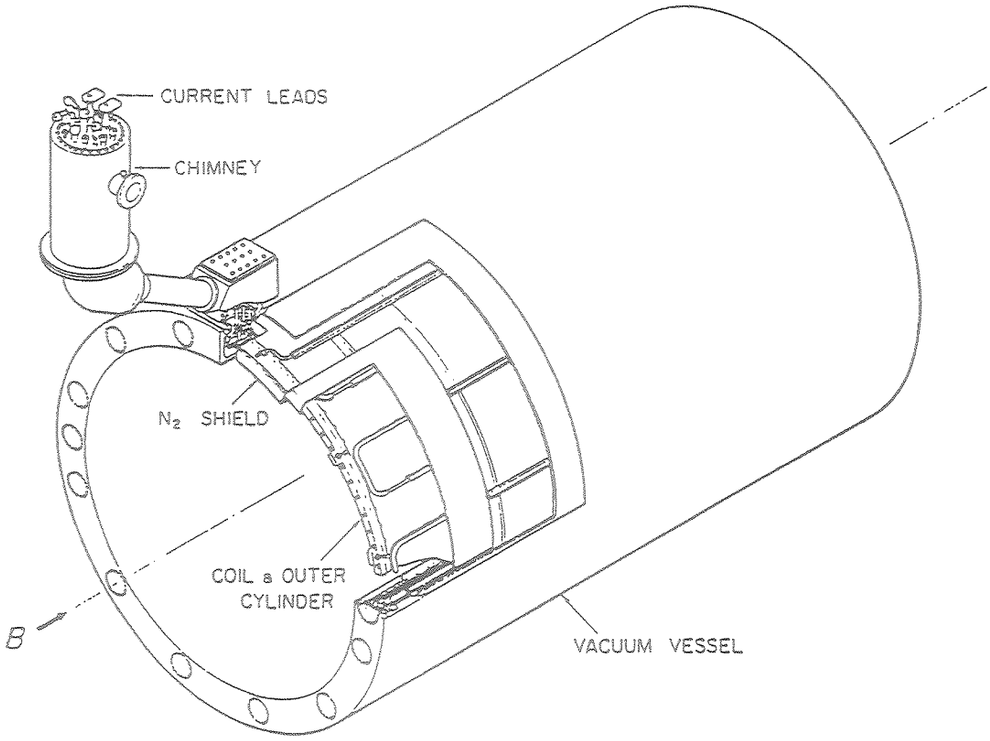

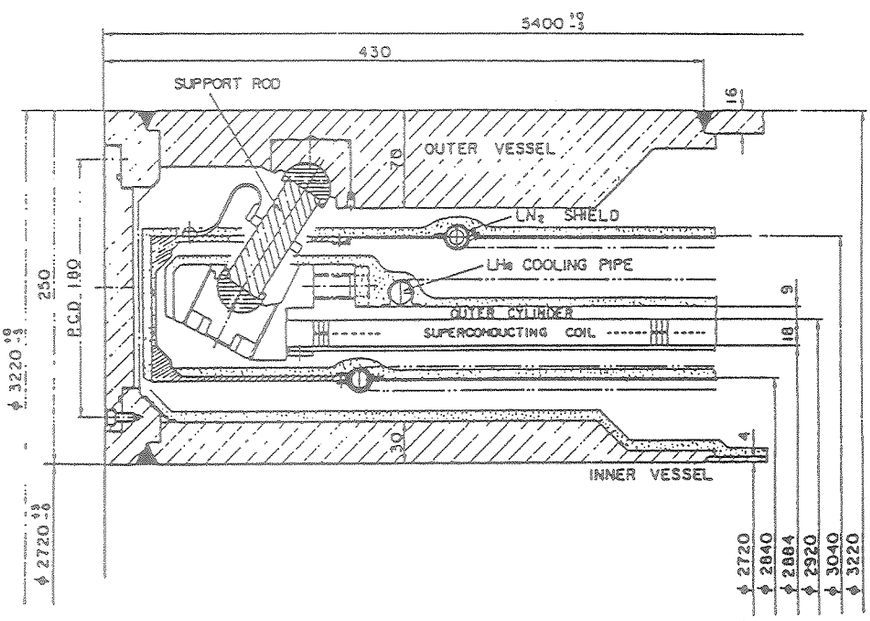

図２．ＴＯＰＡＺ超伝導電磁石概観図

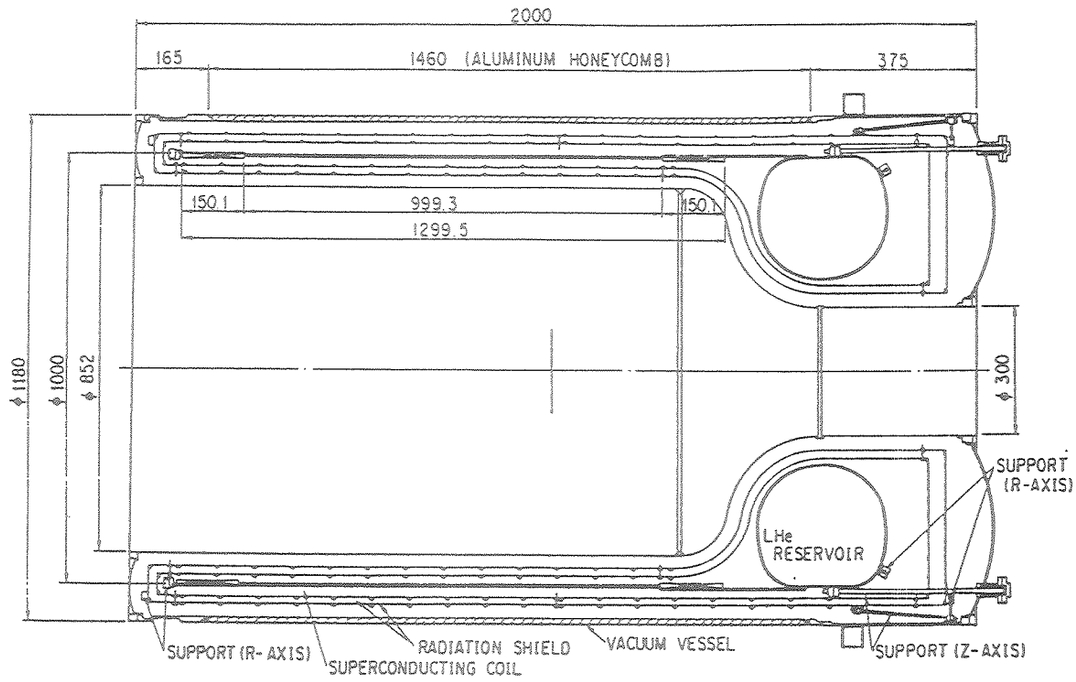

TABLE 1. Main parameters of the thin solenoid for balloon experiments in particle astrophysics.

Dimensions:	
Coil diameter	1.0 m
length	1.3 m
thickness (center)	5.4 mm
(notch)	10.8 mm
Cryostat O.D.	1.2 m
length	2.0 m
Useful aperture	0.85 m
length	1.0 m
Central field	1.2 T
Bmax in coil	2.2 T
Current	520 A
Turns	3368
Inductance	6 H
Stored energy	815 kJ
Wall thickness	0.21 Xo
E/Mef	7 kJ/kg
Total weight	400 kg
Acc force	10 G
Conductor:	
Superconductor	Nb.Ti/Cu
Stabilizer	Pure Al
RRR in pure AL	>1500
NbTi:Cu:AL	1:1:7.3
Outer size	1.2x1.8mm
Ic (@3.8 T, 4.2 K)	930 A
Jc	3700A/mm2
Insulation	Kevlar

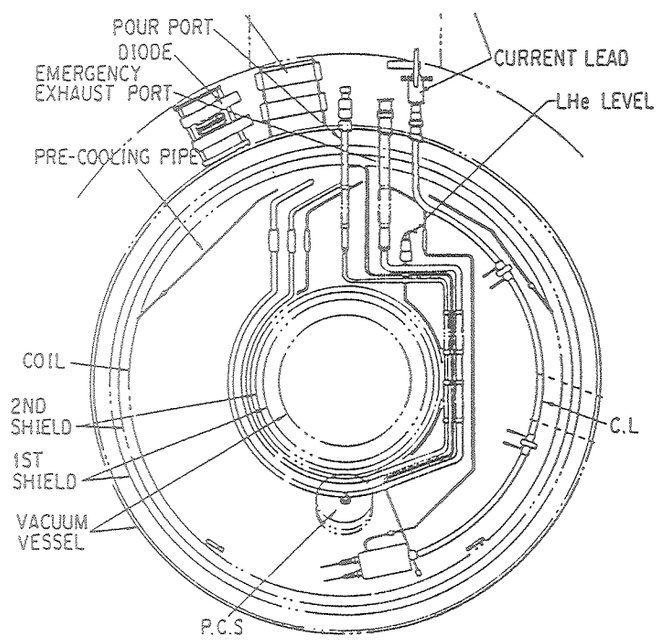

図３．気球実験（ＢＥＳＳ）用薄肉超伝導電磁石概観図

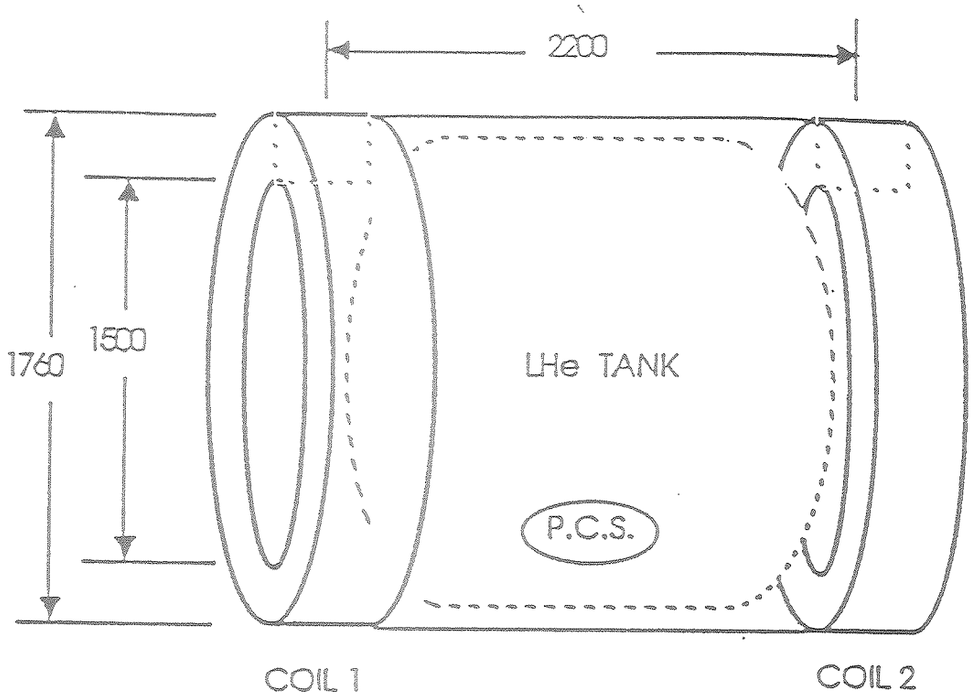

Schematic Configuration of ASTROMAG Test Coil

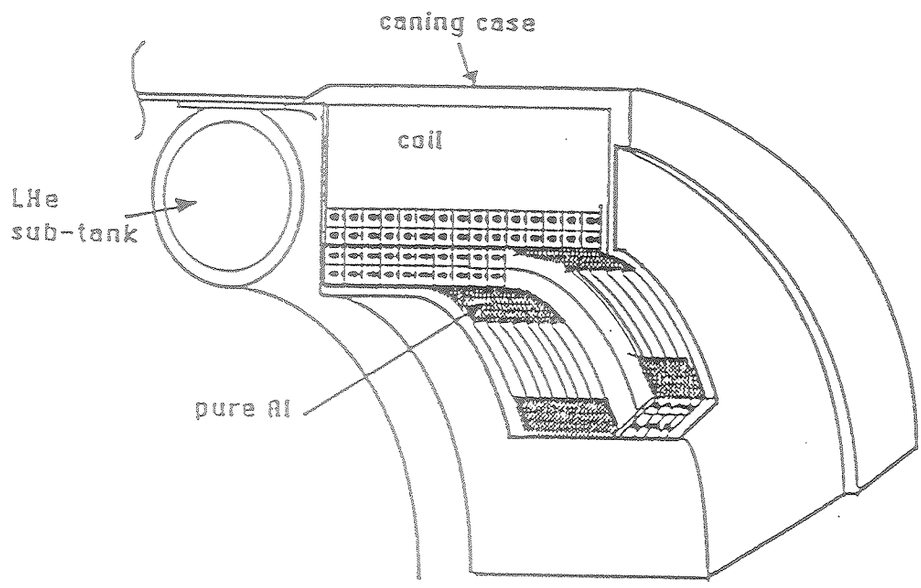

図４．ＡＳＴＲＯＭＡＧテストコイル概観図

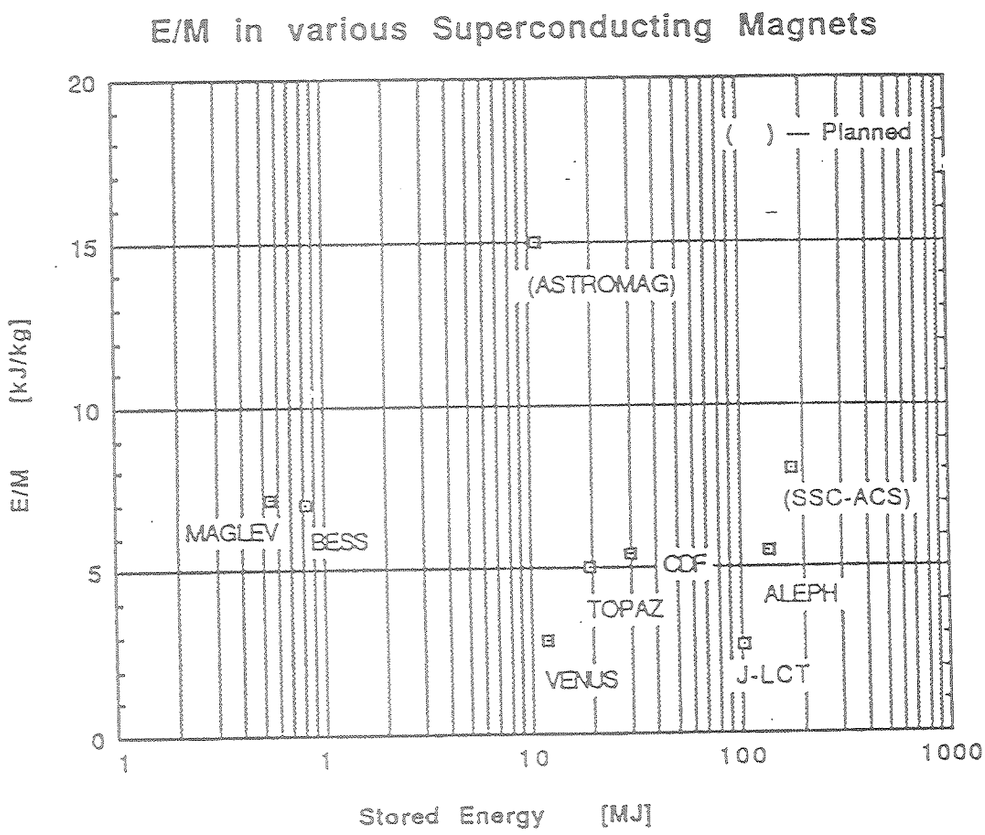

図５．高エネルギー実験用超伝導電磁石におけるＥ／Ｍ