Fermilab

SSC DETECTOR SOLENOID DESIGN NOTE #124

TITLE: Heat Leak Estimate for Type I Solenoid

AUTHOR: A. M. Stefanik Andy

DATE: December 10, 1990

ABSTRACT: This design note contains a preliminary heat leak calculation for the Type I solenoid.

SUMMARY: The calculation was made in August. The coil and shield dimensions are reasonably close to the dimensions on the SDC SUPERCONDUCTING SOLENOID; TYPE I drawing. A CDF type support system was assumed.

The helium heat leak is 19.2 watts.

The nitrogen heat leak is 720 watts.

FERMILAB
ENGINEERING NOTE

SECTION	PROJECT	SERIAL-CATEGORY	PAGE
1.0	SDC		1/

SUBJECT: HEAT LEAK ESTIMATE FOR TYPE I SOLENOID

NAME: A. M. STEFANIK

DATE: 8/15/90

REVISION DATE:

INDEX

NO.	SUBJECT	PAGE
1.1	CALCULATION BASIS	2
1.2	COIL & SHIELD DIMENSIONS	3
1.3	MAGNET HELIUM HEAT LOADS SUMMARY ON PAGE 13	4-13
1.4	MAGNET NITROGEN HEAT LOADS SUMMARY ON PAGE 15	14-15

522703

FERMILAB
ENGINEERING NOTE

SECTION	PROJECT	SERIAL-CATEGORY	PAGE
1.1	SDC		2

SUBJECT: CALCULATION BASIS

NAME: AMS

DATE: 8/10/90

REVISION DATE:

HEAT LOADS FOR THE TYPE I SOLENOIDAL DETECTOR ARE TO BE ESTIMATED BY USING THE CDF HEAT LOAD CALCULATIONS AS A GUIDE.

522703

FERMILAB
ENGINEERING NOTE

SECTION	PROJECT	SERIAL-CATEGORY	PAGE
1.2	SDC		3/

SUBJECT: COIL & SHIELD DIMENSIONS

NAME: AMS

DATE: 8/3/90

REVISION DATE:

	CDF	SDC
INNER DIAMETER	116.75"	153.5"
OUTER DIAMETER	117.54	156.8"
MEAN DIAMETER	117.05"	155.1"
SUPPORT CYLINDER OD	120"	USE 3" → 156.8 + (120 − 117.54) = 159.8"
INNER SHIELD DIAM	113" + 2(0.71) = 114.42"	USE 2 1/2 → 153.5 − (116.75 − 114.42) = 151"
OUTER SHIELD DIAM	FROM RADIATION TO END SHIELDS CALC: SURFACE AREA $= \frac{2.8\,\cancel{w}}{END} * \frac{ft^2}{0.150\,\cancel{w}} = 18.7\,ft^2$	156.8 + (128.5 − 117.54) = 167.76"
LENGTH	196"	354.33"

$$A = \frac{\pi}{4}\left(D_o^2 - D_i^2\right)$$

$$\frac{4}{\pi}(18.7)(144)\,in^2 = \left(D_o^2 - 114.42^2\right)$$

$$128.5'' = D_o$$

522703

SUBJECT: MAGNET HELIUM HEAT LOADS (CDF REPORT PG 221)

NAME: AMS | DATE: 8/13/90 | REVISION DATE: 9/6/90

AXIAL SUPPORTS (CDF REPORT 181)

REFER TO PAGES 5 - 7 FOR CROSS SECTIONAL AREA CALCULATION

$$\frac{\text{SDC AXIAL SUPPORT CROSS SECTIONAL AREA}}{\text{CDF AXIAL SUPPORT CROSS SECTIONAL AREA}} = \frac{12\ (0.26)}{6\ (0.25)} = 2.1$$

$Q_{SDC} = 2.1\ Q_{CDF} = 2.1\ (1.5) = \underline{3.2\ W}$

RADIAL SUPPORTS

REFER TO PAGES 8-10 FOR CROSS SECTIONAL AREA CALCULATION

ESTIMATE RADIAL DECENTERING FORCE AT 10% OF COIL WEIGHT.

MAXIMUM SUPPORT LOAD = 1.1 (COIL WEIGHT)

$= 1.1\ (24\ \text{tonnes} * 1{,}000\ \frac{\text{Kg}}{\text{tonne}} * 2.2046\ \frac{\text{Lbm}}{\text{Kg}})$

$= 58{,}200$ Lbm

$$\frac{\text{SDC RADIAL SUPPORT CROSS SECTIONAL AREA}}{\text{CDF RADIAL SUPPORT CROSS SECTIONAL AREA}} = \frac{0.196}{0.174}$$

$\doteq 1.13$ USING THE SAME NUMBER OF SUPPORTS.

$Q_{SDC} = 1.13\ Q_{CDF} = 1.13\ (4.8) = \underline{5.5\ W}$

DATA FROM BOB WANDS ON AUG 17, 1990: 1) 20 RADIAL & AXIAL SUPPORTS
2) 1 IN^2 CROSS SECTIONAL AREA FOR EACH SUPPORT.
3) 32" LONG.

ASSUME 26" LENGTH BETWEEN LN_2 INTERCEPT & LHe SINK.

$Q = \frac{A}{\ell}\int k\,dT = 3.5\ \frac{W}{cm}\left(\frac{20\ in^2}{26\ in}\right) 2.54\ \frac{cm}{in} = \underline{6.9\ W}$ VS $(3.2 + 5.5 = 8.7\ W)$

THIS IS FOR AN ALTERNATIVE DESIGN.

Axial Supports

Next we calculate the forces and deflections on the axial support members. If the coil is 1" off magnetic center in the axial direction and the magnetic spring constant is ~~10.1×10^4~~ 207,185 lbf/in lb/in. Then,

$1\,\text{in} \times 37\,\frac{\text{tonnef}}{\text{cm}} \times 2.54\,\frac{\text{cm}}{\text{in}} \times \frac{1{,}000\,\text{kg}}{\text{tonnef}} \times 2.2046\,\frac{\text{L}}{\text{k}}$

$$F_z = \cancel{10.1 \times 10^4}\ \text{lb (450 kN)} \qquad \approx 207{,}188\ \text{Lbf}$$

if this force is divided equally among the ~~6~~ 12 axial supports, then

$$T = \frac{\cancel{10.1 \times 10^4}\ 207{,}188}{\cancel{6}\ 12} = \cancel{16800\ \text{lbs}}\ 17{,}266\ \text{Lbs}\ \text{(75 kN)}$$

The force applied to the supports may be either compressive or tensile.

The required cross section of the supports is given by

$$A = \frac{T}{\sigma_a} = \frac{\cancel{16800}\ 17{,}266\ \text{lbs}}{6.7 \times 10^4\ \text{lb/in}^2} \approx 0.25\ \text{in}^2 = 1.62\ \text{cm}^2 \quad \text{(4-77 K)}$$

$0.26\ \text{in}^2$

$$A = 0.320\ \text{in}^2 = 2.1\ \text{cm}^2 \quad \text{(77-300 K)} \rightarrow \frac{17{,}266}{52{,}000} = 0.332\ \text{in}^2$$

use same value

The deflection in the Z direction is

$$\Delta z = \frac{\sigma_a L}{E} = \frac{6.7 \times 10^4\ \text{psi}}{3 \times 10^7\ \text{psi}}\ \text{(12.5 in)}$$

$$= 0.028\ \text{in (0.71 mm)}.$$ same

where we have used L = 12.5" (317.5 mm) as the length of the axial supports. The axial spring constant of this support system is

$$K_z = \frac{F_z}{\Delta z} = \frac{\overset{207,188}{\cancel{10.1 \times 10^4}} \text{ lbs}}{0.028 \text{ in.}} = \overset{7.4 \times 10^6}{\cancel{3.6 \times 10^6}} \text{ lb/in} \quad (630 \text{ MN m})$$

is 35 times stiffer than the magnetic spring constant.

Finally, since the axial support may operate in compression, we must consider elastic buckling of the supports. The critical stress in the support which would lead to elastic buckling is given by the Euler formula*.

$$\sigma_{crit} = \frac{c\pi^2 E}{(L/r)^2} \qquad (6)$$

where

L = length of the support

r = radius of gyration = I/A

I = moment of inertia

c = constant = 1 for free ends

Then for a support with the following cross section:

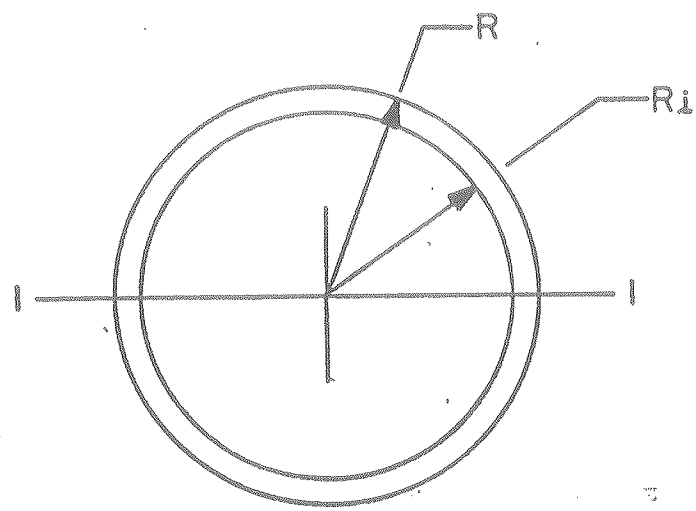

	300 to 77 K (LN2)	77 to 4 K (He)
OD = 7/8" (22.2 mm)		
R = 0.4375 (11.1 mm)	10.16	9.5 mm
R_i = 0.334" (8.5 mm)	5.9182 mm	

Wall thickness = $R - R_i$ = ~~0.103"~~ ~~(2.6 mm)~~

$(R-R_i)_{300 \text{ TO } 77} = 4.2418$ mm

$(R-R_i)_{77 \text{ TO } 4} = 3.5818$ mm

*Roark and Young, "Formulas for Stress and Strain", Fifth Edition, McGraw-Hill, New York, (1975), p. 415

the cross sectional area is

$$A = \pi \quad (R^2 - R_i^2) = 0.25 \text{ in}^2 \ (1.62 \text{ cm}^2)$$

$$A_{300 \text{ TO } 77} = \pi (10.16^2 - 5.9182^2) = 214.26 \text{ mm}^2 = 0.3321 \text{ in}^2 \cong 0.332 \text{ in}^2$$

$$A_{77 \text{ TO } 4} = \pi (9.5^2 - 5.9182^2) = 173.5 \text{ mm}^2 = 0.269 \text{ in}^2 \cong 0.26 \text{ in}^2$$

thus the radius of gyration about axis 1-1 is

$$r = \frac{1}{2}\left(R^2 + R_i^2\right)^{1/2}$$

$$r = 0.28 \text{ in } (7 \text{ mm})$$

$$r_{300 \text{ TO } 77} = \frac{1}{2}\left(10.16^2 + 5.9182^2\right)^{1/2} = 5.9 \text{ mm}$$

$$r_{77 \text{ TO } 4} = \frac{1}{2}\left(9.5^2 + 5.9182^2\right)^{1/2} = 5.6 \text{ mm}$$

using this value in equation (6) and L=~~11.5"~~ for the effective length of the support 230+114 = 344 mm

$$\sigma_{crit} = \frac{\pi^2 (3 \times 10^7 \text{ psi})}{\cancel{(11.5/0.28)^2}\ (344 \text{ mm}/5.6 \text{ mm})^2} = \cancel{176 \text{ ksi}}\ \cancel{(1200 \text{ MPa})}$$

78.5 ksi > 52 ksi OK

which is above the yield point of the material, thus, the support would fail by yielding rather than elastic buckling in compression.

A larger mean radius would increase σ_{CRIT} and decrease the wall thickness for the same cross sectional area.

8
AMS
8/13/90

$$T_5 = T_{10} = -\frac{AE}{L}\Delta V$$

Thus taking the components of these tensions in the V direction gives

$$F_V = 4\,T_4 + 8\,T_2 \cos 60^\circ = 4\,T_4 + 8\,(T_4 \cos 60^\circ) \cos 60^\circ$$

$$= 6\,T_4 = 6\,\frac{AE}{L}\Delta V \qquad (2)$$

We observe that the stiffness of the system in this direction is six times the stiffness of one radial support member.

Next we calculate the required cross sectional area of the radial supports. If we assume that the magnet is 1" (25.4 mm) from magnetic center so that a force of F_V = ~~7.0×10^4~~ 58,200 lb acts upon it, then the supports with the highest tension supplies

$$T = \frac{AE}{L}\Delta V = \cancel{11,667}\ 9,700 \text{ lbs (51890 N)}$$

COIL WT = 52,910 Lbs
RADIAL DECENTERING FORCE = 10% OF THE COIL WT.
RADIAL SUPPORT LOAD = 52,910 (1.1) = 58,200 lbs

which is 1/6 of the total force applied by the V direction. Using a 4 K working stress of 67 ksi (462 MPa) for Inconel 718 it follows that the required cross section area of a support is

$$A = T/\sigma = \cancel{11,667}\ 9,700/67000 = \cancel{0.174}\ 0.145 \text{ in}^2 = 1.12 \text{ cm}^2 \text{ (1-77 K)}$$

$$A = T/\sigma = 11,667/52000 = \cancel{0.224}\ 0.187 \text{ in}^2 = 1.45 \text{ cm}^2 \text{ (77-300 K)}$$

the former corresponds to rods .47" (12 mm) in diameter. With this choice the spring constant of the support system in the V

USE 1/2" O.D ROD!

direction can be calculated from equation (2) using L = 11.25" (286 mm) yields

$$K_V = \frac{F_V}{\Delta V} = \frac{6AE}{L} = \frac{6(0.\cancel{174}\ 0.145\ \text{in}^2)\ (3.0 \times 10^7\ \text{lb/in}^2)}{11.25\ \text{in}}$$

$$= \cancel{2.8}\ 2.3 \times 10^6\ \text{lb/in} \quad (3.1) \qquad (3)$$

clearly this is large compared to the radial magnetic spring of $\cancel{7.0 \times 10^4}$ 5.3×10^3 lbs/in thus the system is stable. RADIAL MAGNETIC SPRING CONSTANT = 52,910 (0.1) ≅ 5,300 Lbs/in

Finally from (3) we can calculate the deflection of the coil assuming that it is 1" from magnetic center

$$\Delta V = \frac{F_V}{K_V} = \cancel{0.025}\ 0.0023\ \text{in} \quad (0.64\ \text{mm})$$

<u>Magnetic force in the Y direction.</u> Here we repeat the previous calculation for forces in the Y direction

$$\Delta L_1 = \Delta L_{12} = \sqrt{L_1^2 + \Delta Y^2} - L_1 \sim \frac{\Delta Y^2}{2L_1}$$

$$\Delta L_2 = \Delta L_{11} = \Delta Y \cos 30^\circ = (3/2)\ \Delta Y$$

$$\Delta L_3 = \Delta L_{10} = -\Delta Y \cos 30^\circ$$

$$\Delta L_4 = \Delta L_9 = \Delta Y \cos 30^\circ$$

$$\Delta L_5 = \Delta L_8 = -\Delta Y \cos 30^\circ$$

$$\Delta L_6 = \Delta L_7 = \Delta L_1$$

thus

$$T_1 = \frac{AE}{L} \left(\frac{\Delta Y^2}{2L}\right)$$

10
AMS
8/13/90

$$T_2 = \frac{AE}{L} \sqrt{\frac{3}{2}}\, \Delta Y$$

$$T_3 = \frac{-AE}{L} \sqrt{\frac{3}{2}}\, \Delta Y \quad \text{etc.}$$

Noting that since ΔY is small the terms proportional to ΔY^2 are negligible and taking the components of these tensions in the Y direction gives

$$F_Y = 8\, T_2 \cos 30^\circ$$

$$= 8 \frac{AE}{L} \left(\frac{\sqrt{3}}{2}\right)^2 \Delta Y$$

$$= 6 \frac{AE}{L} \Delta Y \qquad (4)$$

comparing equation (4) with (2) we see that the support system has the same stiffness in both dirrections. (If the coil were off magnetic center by 1" then ΔY = .025" similiarly, the maximum tension that one support supplies is

$$T = \frac{F_Y}{8 \cos 30^\circ}$$

$$= \frac{5.8 \times 10^4 \;\; \cancel{7.0 \times 10^4}}{8 \left(\frac{\sqrt{3}}{2}\right)} = 8{,}372 \;\; \cancel{10{,}100} \text{ lbs}$$

This tension corresponds to a maximum stress of $\sigma = T/A$ = ~~10,100/.174~~ 8,372/.145 = ~~58~~ 58 KPSI (400 MPa)

SUBJECT

NAME: MS

DATE: 8/13/90 | REVISION-DATE

RADIATION FROM OUTER SHIELD

SURFACE AREA $\doteq \frac{\pi d^2 L}{4} = \pi (156.8 + 3'')(355'') * \frac{ft^2}{144\ in^2}$

$= 1{,}238\ ft^2$

$Q = 3\ mW/ft^2\ (1{,}238\ ft^2) = \underline{3.7\ W}$

RADIATION FROM INNER SHIELD

$Q = 3.7\ W$ – SAME AS OUTER SHIELD WHEN SMALLER DIAMETER IS NEGLECTED.

RADIATION FROM SHIELD ENDS

$A = \frac{\pi}{4}(D_o^2 - D_i^2)(2) = \frac{\pi}{4}\left[(156.8 + 3'')^2 - 153.5^2\right](2)$

$= 3{,}100\ in^2 = 21.5\ ft^2$

$Q = 30\ mW/ft^2\ (21.5\ ft^2) = 645\ mW \doteq \underline{0.7\ W}$

CONDUCTOR JOINTS

CONDUCTOR LENGTH = LENGTH OF TURN x NUMBER OF TURNS

$= \left[2\pi\ (1970\ mm)\right]\left[9000\ mm / 4.83\ mm\right] * \frac{1\ m}{1000\ mm}$

$= 23{,}100\ m$

NO. OF JOINTS $= \frac{23{,}100\ m}{500\ m/JOINT} \doteq 47$ JOINTS

$Q = (8000\ A)^2\ (6.5 \times 10^{-10}\ \Omega/JOINT)(47\ JOINTS) = \underline{2\ W}$

522703

SUBJECT: INSTRUMENTATION

NAME: AMS

DATE: 8/14/90 | REVISION DATE: 9/6/90

QUANTITY — 30 PAIRS

TYPE — 32 AWG COPPER

CROSS SECTIONAL AREA = $30(2)(5\times10^{-5}\,in^2) = 0.0032\,in^2$

$$Q_{\substack{WIRES\\300-77}} = \frac{A}{L}\int_{77}^{300}\lambda\,dT = \left[\frac{0.003\,in^2}{144\,in^2}\,ft^2\right] * \frac{30.48\,cm}{ft} * \left(934\,\frac{W}{cm}\right) = \underline{0.6\,W}$$

$$Q_{\substack{WIRES\\77-4.2}} = \frac{0.003}{144}\left(\frac{30.48}{1}\right)\left(586\,\frac{W}{cm}\right) = \underline{0.4\,W}$$

(DELETED)

SUBJECT

NAME Ams

DATE 8/13/90 | REVISION DATE 9/6/90

SUMMARY

	CDF	SDC
Axial supports	1.5 W	3.2 ◀
Radial supports	4.8 W	5.5 ◀
Radiation	3.3 W	8.1
Joints	0.3 W	2.0
Instrumentation	—	0.4
Total	9.9 W	19.2 W

SUBJECT: MAGNET NITROGEN HEAT LOADS (CDF REPORT PG 230)

NAME: AMS

DATE: 8/13/90

REVISION DATE:

AXIAL SUPPORTS

$$\frac{\text{SDC AXIAL SUPPORT CROSS SECTIONAL AREA}}{\text{CDF AXIAL SUPPORT CROSS SECTIONAL AREA}} = \frac{12(0.332)}{6(0.32)} = 2.1$$

$$Q_{SDC} = Q_{CDF}(2.1) \doteq 24(2.1) = \underline{50.4\ W}$$

RADIAL SUPPORTS

$$\frac{\text{SDC AXIAL SUPPORT CROSS SECTIONAL AREA}}{\text{CDF AXIAL SUPPORT CROSS SECTIONAL AREA}} = \frac{0.187}{0.224}$$

$\doteq 0.85$ USING THE SAME NUMBER OF SUPPORTS

$Q_{SDC} = 0.85(67) = \underline{57\ W}$

▶ SEE BOB WANDS DATA ON PG 4.

$Q = 22\ \frac{W}{cm^2} + 2.54\ \frac{cm}{in}\left(\frac{20 \times 1\ in^2}{6\ in}\right) = \underline{187\ W}$

VS (50.4+57=107.4 W) FOR ALTERNATIVE DESIGN

RADIATION TO OUTER SHIELD

$$Q = 80\ \frac{mW}{ft^2}\left[\frac{\pi(167.76'')(355'')}{144\ in^2/ft^2}\right] = \underline{104\ W}$$

RADIATION TO INNER SHIELD

$$Q = 80\ \frac{mW}{ft^2}\left[\frac{\pi(151'')(355'')}{144\ in^2/ft^2}\right] = \underline{94\ W}$$

RADIATION TO END SHIELDS

$$A = \frac{\pi}{4}(D_o^2 - D_i^2)(2) = \frac{\pi}{4}\left[167.76^2 - 151^2\right]\frac{(2)}{144\ in^2/ft^2} \doteq 60\ ft^2$$

$$Q = 150\ \frac{mW}{ft^2}(60\ ft^2) = \underline{9\ W}$$

522703

CONDUCTION TO INNER SHIELD

RATIO SUPPORTS BY SHIELD SURFACE AREA.

$$\frac{\text{SDC INNER SHIELD SURFACE AREA}}{\text{CDF INNER SHIELD SURFACE AREA}} = \frac{\cancel{\pi}(151)(355)}{\cancel{\pi}(114.42)(196)} = 2.4$$

$$Q_{SDC} = 2.4\, Q_{CDF} = 2.4(65.5) = \underline{157.2\ W}$$

CONDUCTION TO OUTER SHIELD

$$\frac{\text{SDC OUTER SHIELD SURFACE AREA}}{\text{SDC INNER SHIELD SURFACE AREA}} = \frac{\cancel{\pi}(167.76)(\cancel{355})}{\cancel{\pi}(151)(\cancel{355})} = 1.11$$

$$Q_{OUTER} = 1.11\, Q_{INNER} = 1.11(157.2) = \underline{175\ W}$$

CONDUCTION TO END SHIELDS

$$\frac{\text{SDC END SHIELD SURFACE AREA}}{\text{CDF END SHIELD SURFACE AREA}} = \frac{60\ ft^2}{(2)\frac{\pi}{4}\left(\frac{128.5^2 - 114.42^2}{144}\right) ft^2} = 1.61$$

$$Q_{SDC} = 1.61\, Q_{CDF} = 1.61(45) = \underline{72.5\ W}$$

SUMMARY

	CDF	SDC
Instrumentation	—	0.6 (FROM PG 12)
Axial supports	24 W	50.4
Radial supports	67 W	57
Radiation to shells	84 W	207
Conduction to shells	176 W	405
Total	351 W	720 W